SUDCO

racing u.s.a.

Sudco H1-500 Replica Exhaust Pipe Set

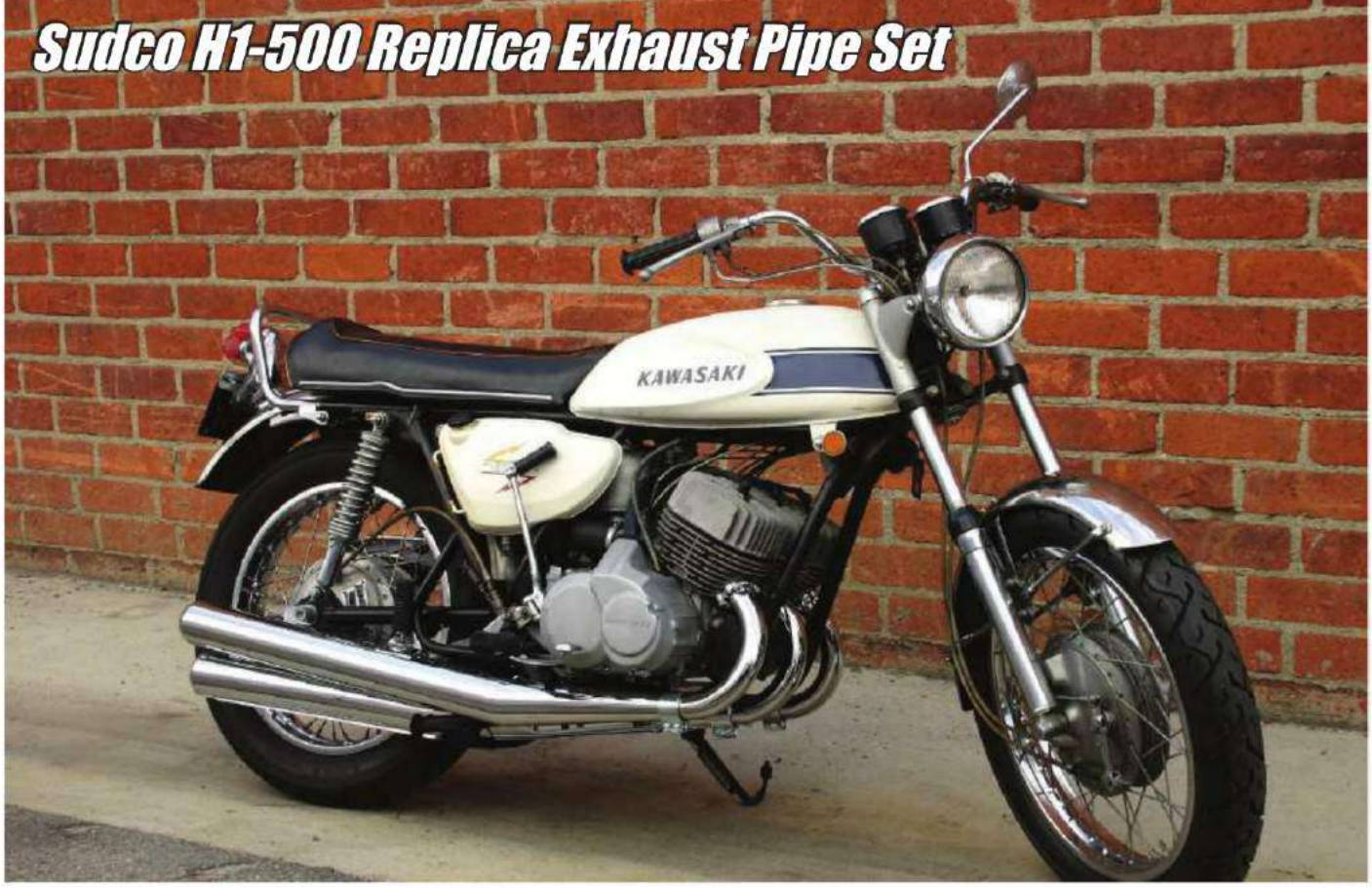

Sudco H1-500 Replica Exhaust Pipe Set

Replica of the stock H1-500 triple exhaust pipe system. Set includes 3 individual exhaust pipes, mufflers, flanges, and exhaust clamps. (Gaskets, and hardware not included) Fits H1-500 triples from 1969 to 1971.

Order No. 502-701

Sudco Z1-900 Replica Exhaust Pipe Set

Sudco Z1-900 Replica Exhaust Pipe

This replica of the Kawasaki Z1-900 exhaust system is an exact copy except for stamped numbering system. Set includes 4 individual exhaust pipes (mounting hardware and gaskets not included) For mounting hardware see **900-565.** Fits Z1/A/B-900 from 1973 to 1975.

Order No. 502-700

Sudco H2-750 Replica Exhaust Pipe Set

Sudco H2-750 Replica Exhaust Pipe Set

Replica of the stock H2-750 triple exhaust pipe system. Set includes 3 individual exhaust pipes, mufflers, flanges, and exhaust clamps. (Gaskets, and hardware not included) Fits H2/A-750 triples from 1972 to 1973.

Order No. **502-702**

Sudco Z1-900 Replica Muffler Mounting Kit & Exhaust Pipe Gasket

Sudco Z1 Muffler Mounting Kit

Kit includes mounting hardware, clamps, rubber bushings (as shown) and exhaust pipe gaskets (not shown) needed to install Sudco Z1 replica exhaust pipe or OEM exhaust pipe.

Order No. **900-565**

Exhaust Pipe Gaskets

Exhaust pipe gaskets are sold each. Available for H1-500, H2-750, and Z1-900 models listed. For other models, see page **292-301** in Engine section. ***Made in Japan.***

Model	Year	Order No.
H1/H1A/H1B/H1C/H1D/H1E-500	69-75	**503-403**
KH500A8	1976	**503-403**
H1/H2A/H2B/H2C-750	72-75	**503-403**
Z1/Z!A/Z!B-900	73-75	**503-405**

Sudco KEIHIN Street Carb Kits

Moto-Guzzi 1100 Kit

Kit includes pre-jetted Keihin FCR41 carb, velocity stacks, throttle and throttle cables. Note: **Does not utilize stock airbox.**

Model	Year	Description	Order No.
1100 Sport Carb Kit	94-96	Keihin FCR41 Kit	016-744

Norton Commando Kit

Kit includes pre-jetted Keihin FCR35 carbs, 2 K&N Filters, throttle and throttle cables. **Requires Amal MKII Conversion Manifolds.**

Model	Year	Description	Order No.
Commando 750/850		Keihin FCR35 Kit	016-860

Sudco MIKUNI Street Carb Kits

HARLEY-DAVIDSON® KITS

Kits include pre-jetted Mikuni VM carburetor, throttle cable, K&N Air Filter, Sudco/Mikuni Tuning Manual, manifolds, additional jets for fine tuning and all necessary adapters.

Model	Description		Order No.
Sportster**/Shovelhead	Mikuni VM38	HDS-101/38mm	001-200
Sportster**/Shovelhead	Mikuni VM44	HDS-101B/44mm	001-202
Knucklehead/Panhead	Mikuni VM38	HDS-102/38mm	001-201
Knucklehead/Panhead	Mikuni VM44	HDS-102B/44mm	001-205

**Sportster 1984 and earlier models only

Honda CB/CL350 Kit

Kits include pre-jetted Mikuni VM Round Slide carburetors, K&N RC-1250 Air Filters and 2 into 1 throttle cable.

Description	Year	Order No.
Mikuni VM30 Kit	1968-1973	001-247

Kawasaki H2-750 Kits

Kits include pre-jetted Mikuni TM Flat Slide carburetors, K&N RC-1250 Air Filters and rubber mounting flanges.

Description	Year	Order No.
Mikuni TM32 Kit	1972-1975	001-239
Mikuni TM34 Kit	1972-1975	001-241

Norton Commando 750/850 Kits

Kits include Mikuni VM pre-jetted carb, rubber flanges, manifolds, spare jets and Sudco/Mikuni Tuning Manual.

Cables not included with kits. Order separately.

Note: VM Roundslide carburetors may be upgraded to TM Flat Slide carburetors on many applications. Ask your Sudco sales rep. for details.

Description	Order No.
Mikuni VM32 Dual Kit	001-250
Mikuni VM34 Dual Kit	001-251
Mikuni VM34 Single Kit	001-252
Mikuni VM36 Single Kit	001-253
Mikuni VM38 Single Kit	001-254
Throttle Cable for VM34 Single Carb Kit	007-575
Throttle Cable for VM36, VM38 Single Carb Kit	007-576
Throttle Cable for VM32, VM34 Dual Carb Kits	002-025

(Some soldering required for 002-025)

Norton Atlas Kit

Kit includes Mikuni VM pre-jetted carb, rubber flange, manifold, spare jets and Sudco/Mikuni Tuning Manual.

Description	Order No.
VM34 Single Kit	001-233

Air Filter will not fit. Cables not included with kit. Order seperately.

Royal Enfield 500 Kits

Kits include Mikuni VM pre-jetted carb, rubber flange, manifold spacer plate, mounting bolts, throttle cable, K&N RU-0600 Air Filter, fuel lines and a Sudco/Mikuni Tuning Manual.

Description	Year	Order No.
Mikuni VM30 Kit	00 on	001-265
Mikuni VM32 Kit	00 on	001-266
Mikuni VM34 Kit	00 on	001-237

Yamaha XS650 Kit

Kit includes pre-jetted Mikuni VM34 carbs, rubber mounting flanges, spare jets, K&N RB-0610 Air Filter, throttle cable and Sudco/Mikuni Tuning Manual.

Note: Removal or slight modifying of side covers required.

Model	Year	Description	Order No.
XS650	70-79	VM34 Kit	001-235
Replacement Throttle Cable only for VM34 Kit			021-960

Triumph Bonneville VM Kits

Kits include Mikuni VM pre-jetted carbs, rubber flanges when applicable, manifolds, air filters, spare jets and Sudco/Mikuni Tuning Manual.

Description	Year	Order No.
Mikuni VM30 Kit	1964-mid 1968	001-278
Mikuni VM32 Kit	1964-mid 1968	001-279
Mikuni VM34 Kit	1964-mid 1968	001-280
Mikuni VM30 Kit	1969-mid 1972	001-275
Mikuni VM32 Kit	1969-mid 1972	001-276
Mikuni VM34 Kit	1969-mid 1972	001-277
Mikuni VM30 Kit	1973-1978	001-290
Mikuni VM32 Kit	1973-1978	001-291
Mikuni VM34 Kit	1973-1978	001-292
Throttle Cable only for VM30 -34 Kits		007-578

Throttle Cable part number 007-578 requires 2 for junction box.

Triumph TR6/TR7 Single Kits

Kits include Mikuni VM pre-jetted carb, rubber flange, manifold, spare jets Sudco/Mikuni Tuning Manual and air filters.

Description	Year	Order No.
Mikuni VM30 Kit	1947-1981	001-293
Mikuni VM32 Kit	1947-1981	001-294
Mikuni VM34 Kit	1947-1981	001-295
Replacement Throttle Cable only for VM Kits		007-577

Sudco Intake Carb Holders

005-898

005-865

005-885

Sudco Intake Carb Holders for Vintage

Use with the original OEM carburetors. **Made in Japan** to OEM specifications. Sold in kits. Order per Sudco part number. **Stock OEM hose clamps must be used when installed. Note:** Some of the applications listed require o-ring or gasket. LH to RH - From left to right behind engine when installing.

Honda

Carb Holder Kit CB750F **Order No. 005-819**

Includes qt 4 Carb Holders
16211-425-000, 16212-425-00 (1 of each)
16213-425-000, 16214-425-00 (1 of each)

Application	Year
CB750L	1979
CB750K	79-82
CB750F Super Sport	79-82
CB750SC Nighthawk	82-83
CB750C Custom	80-82

Carb Holder Kit CB750KO **Order No. 005-897**

Includes qt 4 Carb Holders
LH & RH outside only, 16211-300-305 (1 &4)
LH & RH inside only, 16212-300-305 (2 & 3)

Application	
CB750KO	69-70

Carb Holder Kit CB750K1-K5 **Order No. 005-898**

Includes qt 4 Carb Holders
LH & RH outside only, 16211-300-030 (1 &4)
LH & RH inside only, 16212-300-030 (2 & 3)

Application	Year
CB750K1-K5	71-75
CB750K	1976
CB750F Super Sport	1976

Kawasaki

Carb Holder Kit Z1/KZ900/KZ1000 **Order No. 005-865**

Includes qt 2 LH Carb Holders and qt 2 RH Carb Holders
LH side only, 16065-029
RH side only, 16065-028

Application	Year
Z1/Z1A/Z1B 900	73-75
KZ900A4	1976
KZ900B1 LTD	1976
KZ1000A1/A2	77-78
KZ1000A3/A4 MKII	79-80
KZ1000B1/B2/B3/B4 LTD	77-80
KZ1000C1-C4 Police	78-81
KZ1000E1/E2 Shaft	79-80
KZ1000D1 Z1R	1978
KZ1000D3 Z1R	1980

Kawasaki

Carb Holder Kit KZ1000/KZ1100 **Order No. 005-866**

Includes qt 4 Carb Holders
LH & RH sides 16065-1135

Application	Year
KZ1000J1/J2	81-82
KZ1000K1/K2 LTD	81-82
KZ1000M1/M2 CSR	81-82
KZ1000P1-P21 Police	82-02
KZ1000P24 Police	2005
KZ1000R1 Replica	1982
KZ1100A1/A2 Shaft	81-82
KZ1100B2 GPz	1982
KZ1100D1 Spectre	1982

Carb Holder Kit KZ1000/1100/ZX1100 **Order No. 005-867**

Includes qt 4 Carb Holders
LH & RH sides, 16065-1131

Application	Year
KZ1000J3	1983
KZ1000R2 Replica	1983
KZ1100A3 Shaft	1983
KZ1100D2 Spectre	1983
KZ1100L1 LTD	1983
ZN1100B1/B2 LTD	84-85
ZX1100A1/A2 GPz	83-84

Yamaha

Carb Holder Kit XT600 **Order No. 005-885**

Includes qt 1 LH Carb Holder,
qt 1 RH Carb Holder and qt 2 Intake O-Rings
LH Carb Holder, 43F-13586-01-00
RH Carb Holder, 43F-13596-01-00
Intake O-Ring, 93210-36549

Application	Year
XT600EA/EAC/EB/EBC/ED/EDC	90-92
XT600EE/EEC/EF/EFC/EG/EGC	93-95

Carb Holder Kit XS650 **Order No. 005-877**

Includes qt 1 LH Carb Holder and qt 1RH Carb Holder
LH Carb Holder, 3G1-13586-00-00
RH Carb Holder, 447-13596-00-00

Application	Year
XS650G/H Special II	80-81
XS650SG/SH Special	80-81
XS650SJ/SK Heritage Special	82-83

Carb Holder Kit XS750/850 **Order No. 005-888**

Includes qt 3 Carb Holders 2F3-13586-01-00

Application	Year
XS750E/F	78-79
XS750SE/SF Special	78-79
XS850G/H	80-81
XS850LG/LH Midnight Special	80-81
XS850SG/SH Special	80-81

Sudco Intake Carb Holders

005-880

Yamaha

Carb Holder Kit SR500/TT500/XT500	**Order No. 005-880**
Includes qt 1 Carb Holder and qt 1 Intake Gasket	
Carb Holder, 583-13565-01-00	
Intake Gasket, 583-13556-01-00	
SR500E/F/G/H	78-81
TT500C/D/E/F/G/H	76-81
XT500C/D/E/F/G/H	76-81
Carb Holder Kit FZ600	**Order No. 005-881**
Includes qt 2 LH Carb Holders, qt 2 RH Carb Holders and qt 4 Intake Gaskets	
LH side, 1 & 2, 33M-13586-01-00	
RH side, 3 & 4 33M-13596-01-00	
Intake Gasket, 33M-13556-00-00	
FZ600S/SC/T/TC/U/UC	86-88
Carb Holder Kit YX600	**Order No. 005-882**
Includes qt 2 LH Carb Holders, qt 2 RH Carb Holders and qt 4 Intake Gaskets	
LH side 1 & 2, 33M-13586-01-00	
RH side, 3 & 4 33M-13596-01-00	
Intake Gasket, 3KM-13556-00-00	
YX600S/SC/T/TC/U/UC/W/WC/A/AC Radian	86-90
Carb Holder Kit XS1100	**Order No. 005-879**
Includes qt 2 LH Carb Holders and qt 2 RH Carb Holders	
LH side, 1 & 2, 2H7-13586-00-00	
RH side, 3 & 4 2H7-13596-00-00	
XS1100E/F/G/H	78-81
XS1100LG/LH Midnight Special	80-81
XS1100SF/SG/SH Special	79-81
Carb Holder Kit TT/XT600	**Order No. 005-884**
Includes qt 1 LH Carb Holder, qt 1 RH Carb Holder, and qt 2 Intake O-Rings	
LH side, 43F-13586-01-00	
RH side, 43F-13596-01-00	
Intake O-Ring, 93210-36549	
TT600N	1985
XT600L/LC/N/NC/S/SC/T/TC/U/UC/W/WC	84-89
Carb Holder Kit XS650	**Order No. 005-878**
Includes qt 1 LH Carb Holder and qt 1 RH Carb Holder	
LH Carb Holder, 447-13555-01-00	
RH Carb Holder, 447-13565-01-00	
TX650A	1974
XS650B/C/D	75-77

Sudco Carb Vacuum Fitting Cap

Replacement part for Mikuni RS Smoothbore carburetors. This rubber plug is found on many Yamaha models. ***Made in Japan.*** Sold each. **Order No. 002-646**

005-950 005-955

Carb Holder Clamp

Fits stock carb holder. Dark green color.
Made in Japan. Sold each, and set/ 4.

Kawasaki

Carb Holder Clamp, each	**Order No. 005-950** (45.56mm I.D.)
Carb Holder Clamp, set/4	**Order No. 005-950S**
Z1/A/B-900	73-75
KZ900A4/A5	76-77
KZ1000A1/A2	77-78
KZ1000A3/A3A/A4 MKII	79-80
KZ1000B1/B2/B3/B4 LTD	77-78
KZ1000D1 Z1R	1978
KZ1000D3 Z1R	1980
KZ1000E1/E2 Shaft ST	79-80
Carb Holder Clamp, each	**Order No. 005-955** (52mm I.D.)
Carb Holder Clamp, set/4	**Order No. 005-955S**
KZ1000J1/J2/J3	81-83
KZ1000K1/K2 LTD	81-82
KZ1000M1/M2 CSR	81-82
KZ1000P1-P21 Police	82-02
KZ1000P24 Police	2005
KZ1100A1/A2/A3 Shaft	81-83
KZ1100D1/D2 Spectre	82-83
KZ1100L1 Shaft LTD	1983
ZN1100B1/B2 Shaft LTD	84-85
ZX1100A1/A2 GPz	83-84

K&L Supply Carb Holder Rubber Plugs

Universal rubber plug has many uses. **Made in Japan.** Sold pk/5.
Order No. 005-860

009-800

009-801

K&L Supply Carburetor Passage Plugs

Made in Japan. Sold pk/4.

Honda

Order No. 009-800

Model	Year
GL1000/L Goldwing	75-79

Suzuki

Order No. 009-801

Model	Year
GN125	
GS Series 450/500/550/650/700/750/850/1000/1100/1150	82-95

Yamaha

Order No. 009-802

Model	Year
XS650G/H, Special II	80-81
XS650 SG/ ST Special	80-81
XS650SG/SH Special	80-81
XS650SJ/SK Heritage	82-83
XS1100G/H	80-81
XS1100SG/SH Special	80-81

009-802

Replacement Air Filters

005-554

005-351

OEM Type Replacement Air Filters

Paper element air filter. Fits stock airbox. Sold each.

Honda

Model	Year	OEM Reference	Order No.
CB750K0/K1-K5	69-75	17211-405-000	005-353T
CB750K	76-78	17211-405-000	005-353T
CB750F Super Sport	75-78	17211-405-000	005-353T

Kawasaki

Z1/A/B-900	73-75	11013-034	005-350T
KZ1000A1/A2/	77-78	11013-063	005-351T
KZ1000A3/A3A/A4 MKII	79-80	11013-063	005-351T
KZ1000B1-B4 LTD	77-80	11013-063	005-351T
KZ1000C1-C4 Police	78-81	11013-063	005-351T
KZ1000D1 Z1R	1978	11013-063	005-351T
KZ1000D1 Z1R	1980	11013-063	005-351T
KZ1000J1/J2/J3	81-83	11013-1037	005-352T
KZ1000K1/K2 LTD	81-82	11013-1037	005-352T
KZ1000M1/M2 CSR	81-82	11013-1037	005-352T
KZ1000P1-P21 Police	82-02	11013-1037	005-352T
KZ1000R1/R2 Replica	82-83	11013-1037	005-352T
KZ1100A1/A2/A3 Shaft	81-83	11013-1037	005-352T
KZ1100D1/D2 Spectre	82-83	11013-1037	005-352T
KZ1100L1 LTD Shaft	1983	11013-1037	005-352T

K&N OE Replacement Air Filters

K&N replacement air filters are designed to fit right into your stock airbox. *Made in the USA*. Sold each.

Honda

Model	Year	K&N No.	Order No
CB700SC Nighthawk	84-86	HA-7084	005-372
CB750A Automatic	76-78	HA-0100	005-357
CB750C Custom	80-82	HA-1079	———
CB750F Super Sport	75-78	HA-0100	005-357
CB750K0/K1-K5	69-75	HA-0100	005-357
CB750K	76-78	HA-0100	005-357
GL1500 Goldwing	88-90	HA-8088	005-709

Kawasaki

H1/A/B/C/D/E/F-500	69-75	KA-1000	005-351
KZ550H1/H2 GPz	82-83	KA-1700	———
H2/A/B/H2C-750 Mach IV	72-75	KA-1100	005-554
Z1/A/B-900	73-75	KA-0800	005-350
KZ1000J1/J2/J3	81-83	KA-1600	005-557
KZ1000K1/K2 LTD	81-82	KA-1600	005-557
KZ1000M1/M2 CSR	81-82	KA-1600	005-557
KZ1000P1-P21 Police	82-02	KA-1600	005-557
KZ1000R1/R2 Replica	82-83	KA-1600	005-557
KZ1100A1/A2/A3 Shaft	81-83	KA-1600	005-557
KZ1100D1/D2 Spectre	82-83	KA-1600	005-557
KZ1100L1 LTD	1983	KA-1600	005-557

Yamaha

XS650C/D/E/F/2F	76-79	YA-1152	———
XS650SE/SF	78-79	YA-1152	———
XV700L/LC/N/NC Virago	84-85	YA-1186	005-739
XV700CS/CSC/CT/CTC Virago	86-87	YA-1186	005-739
XV700SS/SSC Virago	1986	YA-1186	005-739
XV750 Virago	88-97	YA-1186	005-739
XV1000L/LC/N/NC Virago	84-85	YA-1186	005-739
XV1100 Virago	86-99	YA-1186	005-739
VMX12 V-Max	85-86	YA-1285	005-582

K&N RECHARGER® FILTER CARE SERVICE KIT

This six step maintenance system is designed to recharge any K&N FILTERCHARGER® AIR FILTER. IT RESTORES AIR FLOW EFFICIENCY SO YOUR FILTERCHARGER® PERFORMS LIKE NEW.

Recharger® Filter Care Service Kit	K&N No.	Order No.
Kit includes 6-1/2 oz. aerosol spray oil, 12 oz. filter cleaner and service decal.	99-5000	005-540
Recharger® Filter Care Service Kit		
Kit includes 8 oz. squeeze oil, 12 oz. filter cleaner and service decal. Same as **005-540** except has squeeze bottle instead of spray can.	99-5050	005-541

K&N FILTERCHARGER® OIL

The only oil specially formulated to work with in combination with the COTTON FABRIC IN K&N FILTERCHARGER® ELEMENTS PROVIDING OUTSTANDING AIR filtration. When used as directed, it quickly penetrates the filter pleats, where it remains suspended in the cotton fabric unit until the element is cleaned with K&N Air Filter Cleaner.

Air Filter Oil	K&N No.	Order No.
6-1/2 oz. aerosol can	99-0504	005-530
12 oz. aerosol can	99-0516	005-532
8 oz. squeeze bottle	99-0533	005-534
Air Filter Cleaner & Degreaser		
32 fl. oz. squirt bottle The only cleaner formulated for K&N FILTERCHARGERÆ ELEMENTS. **Note:** Not to be used on polished anodized aluminum.	99-0621	005-520

Kawasaki Z1-900 73-75 Replica Air Box

The OEM style replica rubber and plastic airbox assembly fits Kawasaki Z1-900 1973-75 models.

Order No.	950-251

Kawasaki H2-750 Air Box Complete

Made of thin fiberglass. Satin black finish.

Order No.	950-250

Kawasaki H2-750 Replica Inlet Tube & Top Duct

OEM style replica rubber fits Kawasaki H2-750 1972-73 model.

Description	Order No.
Air Inlet Tube	900-183
Top Duct	900-184

Carburetor Repair Kits, & Carb Top Gasket

025-610

025-426

Vintage Street Carburetor Repair Kits

Each kit contains necessary parts to rebuild one OEM carburetor body. *Made in Japan.* Note- Check all parts before installation.

Honda

Model	Carburetor	Year	Order No.
CB72 Hawk 250		61-66	025-610
CL72 Scrambler 250		62-65	025-611
CB77 Super Hawk 305		61-68	025-610
CL77 Scrambler 305	20mm	65-68	025-611
CB350F Super Sport		72-74	025-609
CB400F Super Sport		75-77	025-612
CB750K0	28mm	69-70	025-613

025-600

Kawasaki

S1A/S1B/S1C-250	VM22SC	73-75	025-680
KH250A5	VM22SC	1976	025-680
S2/S2A-350	VM24SC	72-73	025-681
S3/S3A-400	VM26SC	74-75	025-682
KH400A	VM26SC	76-78	025-682
H1/A/C-500 Mach III	VM28SC	69-72	025-603
H1B/D/E/F-500	VM28SC	73-75	025-601
H2/A-750 Mach IV	VM30SS	72-73	025-602
Z1/A/B-900	VM28SS	73-75	025-600
KZ1000A1/A2	VM26SS	77-78	025-604
KZ1000A3/A3A MKII	VM28SS	1979	025-605
KZ1000A4 MKII	VM28SS	1980	025-606
KZ1000B1/B2 LTD	VM26SS	77-78	025-604
KZ1000B3 LTD	VM26SS	1979	025-605
KZ1000B4 LTD	VM28SS	1980	025-606
KZ1000C1/C1A Police	VM26SS	1978	025-604
KZ1000C2 Police	VM26SS	1979	025-606
KZ1000C3/C4 Police	VM28SS	80-81	025-606
KZ1000D1 Z1R	VM28SS	1978	025-604
KZ1000D3 Z1R	VM28SS	1980	025-606
KZ1000E1/E2 Shaft ST	VM28SS	79-80	025-605
KZ1000J1/J2	BS34	81-82	025-614
KZ1000K1/K2 LTD	BS34	81-82	025-614
KZ1000M1/M2 CSR	BS34	81-82	025-614
KZ1000P1-P21 Police	BS34	82-02	025-614
KZ1000R1/R2 Replica	BS34	82-83	025-614

Suzuki

Model	Carburetor	Year	Order No.
GT380L/M/A/B Sebring	VM24SC	74-77	025-425
GT750L/M/A/B Lemans	BS	74-77	025-426

Yamaha

RD350/A/B	VM28SC	73-75	025-623
RD400C/D/E	VM28SC	76-78	025-624

Sudco Carburetor Top Cap Cover Gasket

GENUINE replacement top cap cover gasket. Fits Kawasaki and Suzuki 4-cylinder models with stock Mikuni VM carburetors. Sold each. Order No. 002-524

Kawasaki

Model	Year
KZ650B1/B2/B2A/B3	77-79
KZ650C1/C2/C3 Custom	77-79
KZ650D1/D1A/D2 SR	78-79
KZ650E1	1980
KZ650F1	1980
KZ650H1 CSR	1981
KZ900A4/A5	76-77
KZ900B1 LTD	1976
KZ1000A1/A2	77-78
KZ1000B1/B2/B3/B4 LTD	77-80
KZ1000C1/C1A/C2/C3/C4 Police	78-81
KZ1000D1 Z1R	1978
KZ1000D3 Z1R	1980
KZ1000E1/E2 Shaft ST	79-80

Suzuki

GS550B/C/EC/N/EN	77-79
GS550LN	1979
GS750B/C/EC/N/EN	77-79
GS750LN	1979
GS850GN	1979
GS1000C/EC/N/EN	78-79
GS1000LN	1979

007-955

007-957

018-880

018-884

021-862K

Sudco Mikuni Needle Valve Assemblies

Genuine OEM **"MIKUNI"** replacement needle valve assemblies. ***Made in Japan.*** Order by Sudco part number.
See page 12-14 for applications.

Kawasaki

Model & Year	Size	OEM Reference	Order No.
H1-500/H2-750 (all)	2.5	16030-005	007-955
KZ750 2-cyl. (76-80)	2.0	16030-026	007-976
KZ900/1000 (76-80)	2.3	16030-027	007-966
KZ650 (77-80)	2.0	16030-1001	007-958
KZ1000/1100 (81-85)	2.5	16030-1016	007-956

Suzuki

LS650 Savage (all)	2.5	13370-24C80	007-970
GN250 (82-88)	2.5	13370-37400	007-970
GS750E (80-82)	2.0	13370-44500	007-957
GS850G (80-83)	2.0	13370-44500	007-957
GS550 (77-79)	2.3	13370-45010	007-966
GS1000 (77-78)	2.3	13370-45010	007-966
GT750 Lemans (74-77)	2.0	13372-31210	007-976

Yamaha

XS750/XS1100 (77-79)	2.0	1J7-14190-20-00	007-976
XS400J/RJ Maxim/Seca	2.0	11H-14107-20-00	007-957
XS650 (72-79)	2.0	168-14190-20-00	007-958
XS1B-650 (1971)	2.5	168-14190-25-00	007-955
RD250, RD350, RD400	2.5	23L-14107-25-00	007-955
FJ600 (84-85)	2.0	25G-14107-20-00	007-503
FJ1200 (86-87)	2.3	25G-14107-23-00	007-504
FJ1200 (89-93)	1.5	3CF-14107-15-00	007-980

GENUINE Mikuni Needle Valve Seat Filter

Fits OEM push type needle valve assembly. **Made in Japan.** Sold each. Needle Valve Assembly not included.

Order No. 002-606

Kawasaki OEM 14043-1010 - late model KZ1000/1100
Suzuki 13376-19F00 - GS series - GS750/1000/1100
Yamaha 1J7-14994-00-00 - XS1100 Series

Sudco Keihin Needle Valves

Genuine OEM KEIHIN Needle Valves, with clip. Available for Keihin Aftermarket (genuine) and Keihin OEM (genuine) carburetors. **Made in Japan.** Sold each. **See page 12-14 for applications.**

Honda

OEM Reference	Model/Application	Order No.
16011-382-00	CB750K/CB750F (76-78)	018-880
16155-413-751	CB750C/K (80-82)	021-862K*

Kawaski

16030-1007	KZ400/KZ440//ZX900A	018-880
16030-1057	VN700/VN750 Vulcan	018-884

Yamaha

371-14990-60-00	TX500/XS500B	018-880

Note: Needle only, does not include needle valve seat.
*** Non-Genuine part.**

007-990

007-994

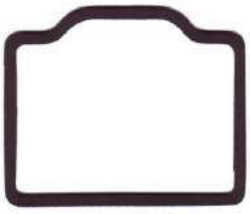

021-895

021-875

Sudco Float Bowl Gaskets & O-Rings

OEM (genuine) replacements. Sold each. **Made in Japan.**
Model applications begin on page 12.
OEM Reference is listed on page 249.

Needle Valve Sets, Needle Valves, Gaskets, & O-Rings

Honda Street

Model	Year	Needle Valve Assy	Needle Valve	Float Bowl Gasket/O-Ring
C70 Passport	80-83	—	—	021-884
CT70H/HK1 Trail 70H	70-73	—	—	021-896
CT70K1/K2/K3/K4 Trail 70	72-75	—	—	021-896
CT70 Trail 70	76-77	—	—	021-896
CT70 Trail 70	80-82	—	—	021-884
CT90K1/K2/K3/K4 Trail 90	69-73	—	—	021-896
CT90K5/K6 Trail 90	74-75	—	—	021-896
CT90 Trail 90	76-77	—	—	021-896
CT90 Trail 90	78-79	—	—	021-884
ST90/K1/K2 Trailsport 90	73-75	—	—	021-896
XL100	77-78	—	018-880	021-886
XL100S	79-85	—	018-880	021-886
CB125S	78-82	—	018-880	—
MT125R	1978	—	018-883	018-113
NX125	88-90	—	—	021-886
XL125 Carb ID PD65A	1976	—	018-880	021-886
XL125	77-78	—	018-880	021-886
XL125S	79-82	—	018-880	021-886
XL125S	84-85	—	018-880	021-886
CM185T Twinstar	78-79	—	018-880	021-886
XL185S	79-82	—	018-880	021-886
XL185S	1983	—	—	021-886
CM200T Twinstar	80-82	—	018-880	021-886
XL200R	83-84	—	—	021-886
CB72 Hawk 250	61-66	—	—	021-895
CL72 Scrambler 250	62-65	—	—	021-895
CM250C	82-83	—	—	021-883
XL250K/K1/K2 Motosport	72-75	—	—	021-889
XL250	1976	—	—	021-889
XL250S	78-81	—	018-880	021-886
XL250R	1982	—	—	021-886
XL250R	84-87	—	018-880	021-886
CB77 Super Hawk 305	61-68	—	—	021-895
CL77 Scrambler 305	65-68	—	—	021-895
XL350	76-78	—	018-880	—
XL350R	84-85	—	018-880	—
CB400A Automatic	1978	—	018-880	021-883
CB400T1 Hawk	78-79	—	018-880	021-883
CB400T11 Hawk	78-79	—	018-880	021-883
CB400T Hawk	80-81	—	021-862K	021-883
CM400A Automatic	1979	—	018-880	021-883
CM400A Automatic	80-81	—	021-862K	021-883
CM400C Custom	1981	—	021-862K	021-883
CM400E	80-81	—	021-862K	021-883
CM400T	1979	—	018-880	021-883
CM400T	80-81	—	021-862K	021-883
CB450SC Nighthawk	82-83	—	021-862K	021-883
CB450SC Nighthawk	1985	—	021-862K	021-883
CB450SC Nighthawk	1986	—	021-862K	021-883
CB450T Hawk	1982	—	021-862K	021-883
CM450A Automatic	82-83	—	021-862K	021-883
CM450C Custom	1982	—	021-862K	021-883
CM450E	82-83	—	021-862K	021-883
CX500	78-79	—	018-880	021-883
CX500C Custom	1979	—	018-880	021-883
CX500C Custom	80-82	—	021-862K	021-883
CX500D Deluxe	1979	—	018-880	021-883
CX500D Deluxe	80-82	—	—	021-883
FT500 Ascot	82-83	—	—	021-883
GL500 Silverwing	81-82	—	—	021-883
GL500I Silverwing Interstate	81-82	—	—	021-883

Honda Street

Model	Year	Needle Valve Assy	Needle Valve	Float Bowl Gasket/O-Ring
VF500C Magna	84-85	—	018-880	—
VF500F Interceptor	84-85	—	018-880	—
XL500S	79-81	—	018-880	021-886
XL500R	1982	—	—	021-886
CB550K	77-78	—	018-880	—
CB550SC Nighthawk	1983	—	—	021-880
VT600C Shadow	88-89	—	018-880	021-885
XL600R	83-87	—	018-880	—
CB650	79-80	—	018-880	—
CB650	81-82	—	—	021-883
CB650C Custom	1980	—	018-880	—
CB650C Custom	81-82	—	—	021-883
CB650SC Nighthawk	1982	—	—	021-883
CB650SC Nighthawk	83-85	—	—	021-880
CX650C Custom	1983	—	—	021-883
GL650 Silverwing	1983	—	—	021-883
GL650I Silverwing Interstate	1983	—	—	021-883
NT650 Hawk GT	88-91	—	018-880	021-885
CB700SC Nighthawk	84-85	—	—	021-880
CB700SC Nighthawk	1986	—	018-880	021-880
VF700C Magna	84-86	—	018-880	021-885
VF700C Magna	1987	—	—	021-885
VF700F Interceptor	84-85	—	018-880	021-885
VF700S Sabre	84-85	—	018-880	021-885
VT700C Shadow	84-85	—	018-880	021-885
VT700C Shadow	86-87	—	018-880	021-885
CB750A Automatic	76-78	—	018-880	021-886
CB750C Custom	80-82	—	021-862K	021-883
CB750F Super Sport	76-78	—	018-880	—
CB750F Super Sport	1979	—	018-880	021-883
CB750F Super Sport	80-82	—	—	021-883
CB750K0/K1/K2/K3/K4/K5	69-75	—	—	021-895
CB750K	1976	—	—	021-895
CB750K	77-78	—	018-880	021-886
CB750K	1979	—	018-880	021-883
CB750K	80-82	—	021-862K	021-883
CB750L LTD	1979	—	018-880	021-883
CB750SC Nighthawk	82-83	—	021-862K	021-883
VF750C V45 Magna	82-83	—	018-880	021-885
VF750F V45 Interceptor	83-84	—	018-880	021-885
VF750S V45 Sabre	82-83	—	018-880	021-885
VT750C Shadow	1983	—	018-880	021-885
VT800C Shadow	1988	—	018-880	021-885
CB900C Custom	80-82	—	—	021-883
CB900F Super Sport	81-82	—	—	021-883
CB1000C Custom	1983	—	021-862K	021-883
VF1000F Interceptor	1984	—	018-880	021-885
VF1000R	85-86	—	018-880	021-885
CBX (1047cc)	79-82	—	018-880	021-883
CB1100F Super Sport	1983	—	021-862K	021-883
GL1100 Goldwing	80-83	—	018-880	021-883
GL1100A Goldwing Aspencade	82-83	—	018-880	021-883
GL1100I Goldwing Interstate	80-83	—	018-880	021-883
VF1100C V65 Magna	83-86	—	018-880	021-885
VF1100S V65 Sabre	84-85	—	018-880	021-885
VT1100C Shadow	85-86	—	018-880	021-885
VT1100C Shadow	87-89	—	018-880	021-885
GL1200 Goldwing	1984	—	018-880	021-885

Needle Valve Sets, Needle Valves, Gaskets, & O-Rings

Kawasaki Street

Model	Year	Needle Valve Assy	Needle Valve	Float Bowl Gasket/O-Ring
KZ200A1/A2	78-79	—	—	021-895
EL250B2/B3 Eliminator	88-89	—	018-880	021-887
EX250E1/E2 Ninja 250R	86-87	—	018-880	021-887
EX250F2/F3/F4 Ninja 250R	88-90	—	018-880	021-887
KL250A1/A1A/A2 Dual Sport	78-79	—	018-880	021-889
KL250A3/A4/A5 Dual Sport	80-82	—	—	007-991
KL250D2-D22 KLR250 Dual Sport	85-05	—	018-880	021-887
KZ250D1/D2 LTD & CSR	80-81	—	018-880	021-889
KZ250L1 CSR	1982	—	018-880	021-889
KZ250W1 LTD	1983	—	018-880	021-889
EX305B1 GPz	1983	—	018-880	021-889
KZ305A1/A2 CSR	81-82	—	018-880	021-889
KZ305B1 CSR Belt	1981	—	018-880	021-889
KZ305B2/B3 LTD	87-88	—	018-880	021-889
A7-350 Avenger	67-71	—	—	002-009
A7SS-350 Avenger SS	70-71	—	—	002-009
S2/S2A-350	72-73	007-955	—	007-987
S3/S3A-400 (2-stroke triple)	74-75	007-955	—	007-987
KH400A3/A4/A5 (2-stroke triple)	76-78	007-955	—	007-987
KZ400A1/A2 Deluxe	77-78	—	018-880	021-889
KZ400B1/B2	78-79	—	018-880	021-889
KZ400C1	1978	—	018-880	021-889
KZ400/D/D3/D4	74-77	—	018-880	021-889
KZ400H1 LTD	1979	—	018-880	021-889
KZ400S/S2/S3 Special	75-77	—	018-880	021-889
KZ440A1/A2/A3/A4 LTD	80-83	—	018-880	021-889
KZ440B1/B2	80-81	—	018-880	021-889
KZ440D1/D2/D3/D4/D5 LTD	80-83	—	018-880	021-889
KZ440G1 Belt	1982	—	018-880	021-889
EN450A1-A6 LTD 454	85-90	—	018-880	021-887
EX500A1-A7	87-93	—	018-880	021-887
H1/A/B/C-500 (2-stroke triple)	69-72	007-955	—	002-099
H1D/H1E/H1F-500	73-75	007-955	—	002-099
KH500A8 (2-stroke triple)	1976	007-955	—	002-099
KL600A1 KLR600	1984	—	018-884	021-887
KL600B1/B2 KLR600	85-86	—	018-884	021-887
ZL600A1/A2 Eliminator	86-87	—	018-880	021-887
ZX600A1/A2/A3 Ninja 600R	85-87	—	018-880	021-887
ZX600B1 Ninja 600RX	1987	—	018-880	021-887
ZX600C1-C10 Ninja 600R	88-97	—	018-880	021-887
KL650A1-A19 KLR650	87-05	—	018-884	021-887
KZ650B1/B2/B2A	77-78	007-958	—	007-994
KZ650B3	1979	007-958	—	007-997
KZ650C1/C2 Custom	77-78	007-958	—	007-994
KZ650C3 Custom	1979	007-958	—	007-997
KZ650D1/D1A SR	1978	007-958	—	007-994
KZ650D2 SR	1979	007-958	—	007-997
KZ650E1 LTD	1980	007-958	—	007-997
KZ650F1	1980	007-958	—	007-997
KZ650H1 CSR	1981	007-958	—	007-994
KZ650H2/H3 CSR	82-83	—	—	007-990
KZ700A1	1984	007-956	—	007-990
ZN700A1/A2 LTD	84-85	—	018-880	021-889
VN700A1 Vulcan	1985	—	018-884	—
H2/A/B/H2C-750 Mach IV	72-75	007-955	—	002-009
KZ750B1/B2/B3/B4 (2 cylinder)	76-79	007-976	—	007-989
KZ750E1/E2/E3	80-82	—	018-880	021-889
KZ750F1 LTD Shaft	1983	—	018-880	021-889
KZ750G1 LTD (2 cylinder)	1980	007-976	—	007-989
KZ750H1/H2/H3/H4 LTD	80-83	—	018-880	021-889
KZ750K1/K2 LTD (2 cylinder)	83-84	007-956	—	007-990
KZ750L3	1983	007-956	—	007-990

Kawasaki Street

Model	Year	Needle Valve Assy	Needle Valve	Float Bowl Gasket/O-Ring
KZ750M1 CSR (2 cylinder)	82-83	007-956	—	007-990
KZ750N1/N2 Spectre	82-83	—	018-880	021-889
KZ750R1 GPz	1982	—	—	007-990
VN750A2-A21 Vulcan 750	86-05	—	018-884	—
ZX750A1/A2/A3 GPz	83-85	007-956	—	007-990
ZX750F1/F2/F3/F4 Ninja 750R	87-90	—	018-880	021-887
ZX750H1/H2 Ninja ZX-7	89-90	—	018-880	021-888
KZ900A4/A5	76-77	007-966	—	007-994
KZ900B1 LTD	1976	007-966	—	007-994
KZ900C2 Police	1976	007-966	—	007-994
Z1/A-900 (frame 00001 to 32817)	73-74	—	—	007-992
Z1A-900 (from frame 32818 on)	1974	—	—	007-993
Z1B-900	1975	—	—	007-993
ZL900A1/A2 Eliminator	85-86	—	018-880	021-887
ZX900A1/A2/A3 Ninja	84-86	—	018-880	021-887
KZ1000A1/A2	77-78	007-966	—	007-994
KZ1000A3/A3A/A4 MKII	79-80	007-966	—	007-997
KZ1000B1/B2 LTD	77-78	007-966	—	007-994
KZ1000B3/B4 LTD	79-80	007-966	—	007-997
KZ1000C1/C1A Police	1978	007-966	—	007-994
KZ1000C2/C3/C4 Police	79-81	007-966	—	007-997
KZ1000D1 Z1R	1978	007-966	—	007-994
KZ1000D3 Z1R	1980	007-966	—	007-997
KZ1000E1/E2 Shaft ST	79-80	007-966	—	007-997
KZ1000J1/J2/J3	81-83	007-956	—	007-990
KZ1000K1/K2 LTD	81-82	007-956	—	007-990
KZ1000M1/M2 CSR	81-82	007-956	—	007-990
KZ1000P1-P21 Police	82-02	007-956	—	007-990
KZ1000R1/R2 Replica	82-83	007-956	—	007-990
ZG1000A1/A2 Concours	86-87	—	018-880	021-887
ZL1000A1 Eliminator	1987	—	018-880	021-887
ZX1000A1/A2 Ninja 1000R	86-87	—	018-880	021-887
ZX1000B1/B2/B3 Ninja ZX-10	88-90	—	018-880	021-888
KZ1100A1/A2/A3 Shaft	81-83	007-956	—	007-990
KZ1100D1/D2 Spectre	82-83	007-956	—	007-990
KZ1100L1 LTD	1983	007-956	—	007-990
ZN1100B1/B2 LTD Shaft	84-85	007-956	—	007-990
ZG1200A1 Voyager XII	1986	—	018-880	021-887

Suzuki Street

GN125Z/D	82-83	007-957	—	—
GN250Z/D/F/J	82-88	007-970	—	007-991
GS250TT/TX	80-81	007-957	—	—
GT250K Hustler	1973	—	—	002-099
GT250L/M/A/B Hustler	74-77	—	—	002-099
GS300LZ/LD	82-83	007-957	—	—
GS300LF	1985	007-957	—	—
GT380K/L/M/A/B Sebring	73-77	—	—	002-099
GN400T/XT/XX/TX/TX	80-82	—	—	007-991
GS450ED	1983	007-957	—	—
GS450GAZ/GAD Automatic	82-83	007-957	—	—
GS450GAF Automatic	1985	007-957	—	—
GS450LD	1983	007-957	—	007-990
GS450LF/LG/LH/LJ	85-88	007-957	—	007-990
GS450TXD	1983	007-957	—	007-990
GT500A/B Titan	76-77	—	—	002-099
GS550B/C/EC	77-78	007-966	—	007-994
GS550N/EN/LN	1979	007-966	—	007-994
GS550ET	1980	007-957	—	007-990
GS550LT/LX/LZ	80-82	007-957	—	007-990
GS550MZ	1982	007-957	—	007-990

Needle Valve Sets, Needle Valves, Gaskets, & O-Rings

Suzuki Street

Model	Year	Needle Valve Assy	Needle Valve	Float Bowl Gasket/O-Ring
GS550TX	1981	007-957	—	007-990
GT550K/L/M/A/B Indy	73-77	007-966	—	002-099
GSX600FJ/FK Katana	88-89	007-957	—	021-875
GR650D/XD Tempter	1983	007-957	—	007-990
GS650EX/EZ	81-82	007-957	—	007-990
GS650GX/GZ/GD	81-83	007-957	—	007-990
GS650GLX/GLZ/GLD	81-83	007-957	—	007-990
GS650MD Katana	1983	007-957	—	007-990
LS650FG/FH Savage	86-87	007-970	—	007-991
LS650PG/PH/PJ Savage	86-88	007-970	—	007-991
GS700EF/ESF	1985	007-957	—	007-990
GV700GLF Madura	1985	007-957	—	—
GV700GLF2 Madura	1985	007-957	—	—
GS750B/C/EC	77-78	007-966	—	007-994
GS750N/EN/LN	1979	007-966	—	007-994
GS750ET/EX/EZ	80-82	007-957	—	007-990
GS750ED/ESD	1983	007-957	—	007-990
GS750LT/LX	80-81	007-957	—	007-990
GS750TZ/TD	82-83	007-957	—	007-990
GS750SD Katana	1983	007-957	—	007-990
GSX750FK-FV Katana	89-97	—	—	021-876
GSX-R750G/H	86-87	007-957	—	021-875
GSX-R750RG	1986	007-957	—	021-875
GSX-R750J/K	88-89	—	—	021-876
GT750J/K Lemans	72-73	—	—	002-099
GT750L/M/A/B Lemans	74-77	007-976	—	007-989
GS850GN	1979	007-966	—	007-994
GS850GT/GX/GZ/GD	80-83	007-957	—	007-990
GS850GLT/GLX/GLZ/GLD	80-83	007-957	—	007-990
GS1000C/EC/N/EN	78-79	007-966	—	007-994
GS1000ET	1980	007-957	—	007-990
GS1000GT/GX	81-82	007-957	—	007-990
GS1000GLT/GLX	81-82	007-957	—	007-990
GS1000LN	1979	007-966	—	007-994
GS1000SN	1979	007-966	—	007-994
GS1000ST	1980	007-957	—	007-990
GS1000SZ Katana	1982	007-957	—	007-990
GS1100ET/EX/EZ/ED/ESD	80-83	007-957	—	007-990
GS1100GZ/GLZ/GD/GLD	82-83	007-957	—	007-990
GS1100GKZ/GK2/GKD/GKE	82-84	007-957	—	007-990
GS1100LT	1980	007-957	—	007-990
GS1100SD Katana	1983	007-957	—	007-990
GSX1100FJ-FP Katana	88-93	—	—	021-875
GSX-R1100G/H/J	86-88	007-957	—	021-875
GS1150ES3/ESE/EF/ESF	83-85	007-957	—	007-990
GS1150EF2/EG/ESG	85-86	007-957	—	007-990
GV1200GLF/GLG Madura	85-86	007-957	—	—
GV1200GLF2 Madura	1985	007-957	—	—

Yamaha Street

Model	Year	Needle Valve Assy	Needle Valve	Float Bowl Gasket/O-Ring
RS100B/C	75-76	—	—	007-250
TA125		007-955	—	002-361
YAS1C-125	1968	—	—	007-282
YCS1/YCS1C (180cc)	1968	—	—	007-282
XC180DN/DNC Riva 180	1985	007-503	—	—
XC180K/KC/L/LC/N/NC	83-85	007-503	—	—
XC180ZL/ZLC/ZN/ZNC	84-85	007-503	—	—
DS6C/DS6B-250	69-70	007-958	—	002-009
DS7-250	1972	007-958	—	002-361
RD250/A/B	73-75	007-955	—	007-995
SR250G/H/J Exciter	80-82	007-503	—	007-990
SR250TH Exciter II	1981	007-503	—	007-990
YDS5-250	1967	—	—	002-009

Yamaha Street

Model	Year	Needle Valve Assy	Needle Valve	Float Bowl Gasket/O-Ring
YM2C-305	1967	—	—	002-009
R5/R5B/R5C-350	70-72	007-958	—	002-361
RD350/A/B-350	73-75	007-955	—	007-995
RZ350L/N/NC/NCII	84-85	—	—	007-250
XS360C/D/2D	76-77	007-976	—	007-989
RD400C/D/E/F	76-79	007-955	—	007-995
XS400D/E/2E/F/2F	77-79	007-976	—	007-991
XS400G/H Special II	80-81	007-503	—	007-990
XS400SG/SH Special	80-81	007-503	—	007-990
XS400SJ Heritage	1982	007-503	—	007-990
XS400J Maxim	1982	007-957	—	—
XS400RJ Seca	1982	007-957	—	—
SR500E/F	78-79	—	—	007-996
TX500/A	73-74	—	018-880	021-889
XS500B	1975	—	018-880	021-889
XS500C/D	76-77	007-282	—	007-989
XS500E	1978	007-976	—	007-991
XT500E/F Dual Sport	78-79	—	—	007-996
XJ550H/J/K Maxim	81-83	007-503	—	—
XJ550RH/RJ/RK Seca	81-83	007-503	—	—
XZ550RK Vision	1983	007-957	—	—
FJ600L/LC/N/NC	84-85	007-5033	—	—
FZ600S/SC/T/TC/U/UC	86-88	007-504	—	—
YX600S/SC-A/AC Radian	86-90	007-504	—	—
XS1B-650	1971	007-955	—	007-989
XS2-650	1972	007-282	—	007-989
TX650/A	73-74	007-282	—	007-989
XS650B/C/D/E/F	75-79	007-282	—	007-989
XS6502F	1979	007-282	—	007-989
XS650SE/SF Special	78-79	007-282	—	007-989
XS650G/H Special II	80-81	007-503	—	007-990
XS650SG/SH Special	80-81	007-503	—	007-990
XS650SJ/SK Heritage Special	82-83	007-503	—	007-990
XJ700XN/XNC Maxim X	1985	007-504	—	—
XJ700XS/XSC Maxim X	1986	007-504	—	—
Maxim X with Mikuni Carbs only				
TX750/A	73-74	007-282	—	007-989
XS750D/2D	1977	007-976	—	007-989
XS750E/F	78-79	007-976	—	007-991
XS750SE/SF Special	78-79	007-976	—	007-991
XV750U/UC-G/GC Virago	88-95	007-980	—	—
FJ1100L/LC/N/NC	84-85	007-504	—	—
XJ1100J Maxim	1982	007-503	—	007-990
XS1100E/F	78-79	007-976	—	007-991
XS1100G/H	80-81	007-503	—	007-990
XS1100LG/LH Midnight	80-81	007-503	—	007-990
XS1100SF Special	1979	007-976	—	007-991
XS1100SG/SH Special	80-81	007-503	—	007-990
XV1100U/UC-L/LC Virago	88-99	007-980	—	—
FJ1200S/SC/T/TC	86-87	007-504	—	—

002-114

002-605

007-727

Sudco Mikuni Carburetor Float & Pin

Genuine Mikuni carburetor float and pin. Sold each. ***Made in Japan.***
Parts are sold separately, order by Sudco part number.

Kawasaki Street

Model	Year	Float	Float Pin
A7-350 Avenger 2-stroke rotary valve	66-71	002-114	002-605
A7SS-350 Avenger SS	70-71	002-114	002-605
H1D/E/F-500 2-stroke triple	73-75	002-114	002-605
KH500A8 2-stroke triple	1976	002-114	002-605
H2/A/B/C-750 2-stroke triple	72-75	002-114	002-605
KZ650H2/H3 CSR	82-83	007-727	002-605
KZ700A1	1984	007-727	002-605
H2/A/B/C-750 2-stroke triple	72-75	002-114	002-605
KZ750K1/K2 LTD (2-cylinder)	83-84	007-727	002-605
KZ750L3	1983	007-727	002-605
KZ750M1 CSR (2-cylinder)	1982	007-727	002-605
KZ750R1 GPz	1982	007-727	002-605
ZX750A1/A2/A3 GPz	83-85	007-727	002-605
KZ1000J1/J2/J3	81-83	007-727	002-605
KZ1000K1/K2 LTD	81-82	007-727	002-605
KZ1000M1/M2 CSR	81-82	007-727	002-605
KZ1000P1-P21 Police	82-02	007-727	002-605
KZ1000R1/R2 Replica	82-83	007-727	002-605
KZ1100A1/A2/A3 Shaft	81-83	007-727	002-605
KZ1100D1/D2 Spectre	82-83	007-727	002-605
KZ1100L1 LTD	1983	007-727	002-605
ZN1100B1/B2 LTD Shaft	84-85	007-727	002-605

Suzuki Street

GS250TT/TX	80-81	007-727	002-605
GS300LZ/LD	82-83	007-727	002-605
GS300LF	1985	007-727	002-605
GS450ED	1983	007-727	002-605
GS450GAZ/GAD Automatic	82-83	007-727	002-605
GS450GAF Automatic	1985	007-727	002-605
GS450LD	1983	007-727	002-605
GS450LD/LF/LG/LH/LJ	85-88	007-727	002-605

Suzuki Street

Model	Year	Float	Float Pin
GR650D/XD Tempter	1983	007-727	002-605
GS650EX/EZ	81-82	007-727	002-605
GS650GX/GZ/GD	81-83	007-727	002-605
GS650GLX/GLZ/GLD	81-83	007-727	002-605
GS650MD Katana	1983	007-727	002-605
GS700EF/ESF	1985	007-727	002-605
GS750ET/EX/EZ	80-82	007-727	002-605
GS750ED/ESD	1983	007-727	002-605
GS750LT/LX	80-81	007-727	002-605
GS750SD Katana	1983	007-727	002-605
GS750TZ/TD	82-83	007-727	002-605
GS850GT/GX/GZ/GD	80-83	007-727	002-605
GS850GLT/GLX/GLZ/GLD	80-83	007-727	002-605
GS1000ET	1980	007-727	002-605
GS1000GT/GX	80-81	007-727	002-605
GS1000GLT/GLX	80-81	007-727	002-605
GS1000ST	1980	007-727	002-605
GS1000SZ Katana	1982	007-727	002-605
GS1100ET/EX/EZ	80-82	007-727	002-605
GS1100ED/ESD	1983	007-727	002-605
GS1100GKZ/GK2/GKD/GKE	82-84	007-727	002-605
GS1100GLZ/GLD	82-83	007-727	002-605
GS1100LT	1980	007-727	002-605
GS1100SD	1983	007-727	002-605
GS1150ES3/ESE/EF/ESF/EF2	83-85	007-727	002-605
GS1150/EG/ESG	1986	007-727	002-605

Yamaha Street

SR250G/H/J Exciter	80-82	007-727	002-605
SR250TH Exciter II	1981	007-727	002-605
XS400J/K Maxim	82-83	007-727	002-605
XS400RJ/RK Seca	82-83	007-727	002-605
FJ600L/LC/N/NC	84-85	007-727	002-605
XS1/XS1B/XS2-650	70-72	002-114	002-605
TX650/A	73-74	002-114	002-605
XS650B/C/D/E/F	75-79	002-114	002-605
XS6502F	1979	002-114	002-605
XS650H Special II	1981	007-727	002-605
XS650SE/SF Special	78-79	002-114	002-605
XS650SH Special	1981	007-727	002-605
XS650SJ/SK Heritage Special	82-83	007-727	002-605
XJ700XN/XNC/XS/XSC Maxim X	85-86	007-727	002-605
XJ900RK Seca	1983	007-727	002-605
FJ1100L/LC/N/NC	84-85	007-727	002-605
XJ1100J Maxim	1982	007-727	002-605
XS1100H	1981	007-727	002-605
XS1100LH Midnight Special	1981	007-727	002-605
XS1100SH Special	1981	007-727	002-605
FJ1200S/SC/T/TC	86-87	007-727	002-605
FJ1200W/WC/A/AC/B/BC/D/DC	89-92	007-727	002-605
FJ1200AD/ADC/AE/AEC (ABS)	92-93	007-727	002-605

Carburetor Float & Pin

010-206

010-207

010-210

K&S Mikuni Carburetor Float & Pin

Replacement carburetor floats for Mikuni carburetors.
Sold as set for one carburetor. Includes Float Pin.

Honda Street

Order No. **010-206** OEM: **56-1606**

Model	Year
CB400	1978
CB750	1979
CB750K	1979
CBX	79-82
CM400A	1979
CM400T	1979
CX500C	1979
CX500D	1979
Goldwing 1100	80-83
Hawk I 400	78-79
Hawk II 400	78-79

Honda Street

Order No. **010-207** OEM: **56-1607**

Model	Year
CB750	69-74
CB750F	75-76
CB750K	75-76

Honda Street

Order No. **010-210** OEM: **56-1610**

Model	Year
CB125S	80-82
CB550K	77-78
CB650	79-80
CB650C Custom	1980
CB750A Automatic	77-78
CB750F Super Sport	77-78
CB750K	77-78
CM185T Twinstar	78-79
CM200T Twinstar	80-82
XL100	77-78
XL100S	79-85
XL185S	79-82
XL250S	78-81
XL350	77-78
XL500S	79-81

Honda Street

Order No. **010-211** OEM: **56-1611**

Model	Year
TR200	1986
XL185S	1983
XL200R	83-84
XL250R	82-83

Yamaha Street

Order No. **010-205** OEM: **56-1605**

Model	Year
YFM125 Grizzly	04-13
YFB250FW Timberwolf 4x4	94-00
YFB250 Timberwolf 2x4	92-98
YFA-1 Breeze125	89-04
YFU1W Pro Hauler	1989
YFM225 Moto-4	86-88
YFM200 Moto-4	85-89
YTM225 Tri-Moto	83-86
YTM200 Tri-Moto	83-85
YTM200E Yamahauler	83-84

Yamaha Street

Order No. **010-207** OEM: **56-1607**

Model	Year
DT80	81-83
GT1	1973
GT80	74-80
GTMX	73-79
MX80	80-82
TY250	1974
TY80	74-75
XT125	1983

Keihin Type Press-Fit Main Jets

Sudco Keihin Type Press-Fit Primary Main Jets

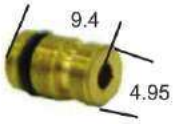

KEYSTER brand, aftermarket type jets.
Dealer kit includes qt 4 jets of sizes listed below.
(Total 44 jets) with storage box. **Made in Japan.**

Keihin Type Press-Fit Primary Main Jet Kit **Order No. 026-090**
Includes storage box and qt 4 each of the following size: #60, #62, #65, #68, #70, #72, #75, #82, #88, #90, #92

Keihin Type Press Fit Primary Main Jets with O-Ring Sold each.

Size	Order No.	OEM Ref	Size	Order No.	OEM Ref
#60	026-010	99201-601-0600	#75	026-016	99201-601-0750
#62	026-011	99201-601-0620	#82	026-017	99201-601-0820
#65	026-012	99201-601-0650	#88	026-018	99201-601-0880
#68	026-013	99201-601-0680	#90	026-019	99201-601-0900
#70	026-014	99201-601-0700	#92	026-020	99201-601-0920
#72	026-015	99201-601-0720			

Honda

Model	Year
CB350G Super Sport	1973
CB350K0/K1/K2/K3/K4	68-73
CL350K0/K1/K2/K3/K4/K5	68-73
GL1000K Goldwing	75-79
GL1000L Goldwing LTD	1976

008-001

008-002

Sudco Plastic Jet Boxes (Storage Boxes)

Two boxes available, 36 compartment and 18 compartment.
Use for valve shim storage, small parts, electrical connectors and carburetor jets. Sold each.

Description	Order No.
Jet Box with 36 Compartments 7-1/2" L x 10-1/2" L x 1-1/4" H	008-001
Jet Box with 18 Compartments 3-1/4" L x 6-3/4" L x 1-1/2" H	008-002

Sudco Keihin Type Press-Fit Secondary Main Jets

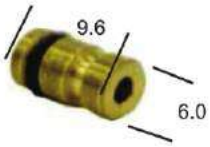

KEYSTER brand, aftermarket type jets.
Dealer kit includes qt 4 jets of sizes listed below.
(Total 68 jets) with storage box. **Made in Japan.**

Keihin Type Press-Fit Secondary Main Jet Kit **Order No. 026-091**
Includes storage box and qt 4 each of the following size: #68, #70, #72, #75, #78, #80, #98, #100, #105, #110, #115, #120, #125, #130, #135, #140, #150

Keihin Type Press Fit Secondary Main Jets with O-Ring Sold each.

Size	Order No.	OEM Ref	Size	Order No.	OEM Ref
#68	026-043	99202-601-0680	#110	026-054	99202-601-1100
#70	026-044	99202-601-0700	#115	026-055	99202-601-1150
#72	026-045	99202-601-0720	#120	026-056	99202-601-1200
#75	026-046	99202-601-0750	#125	026-057	99202-601-1250
#78	026-047	99202-601-0780	#130	026-058	99202-601-1300
#80	026-048	99202-601-0800	#135	026-059	99202-601-1350
#98	026-051	99202-601-0980	#140	026-060	99202-601-1400
#100	026-052	99202-601-1000	#150	026-062	99202-601-1500
#105	026-053	99202-601-1050			

Honda

Model	Year
CB350F/F1 Super Sport	72-74
CB350G Super Sport	1973
CB350K0/K1/K2/K3/K4	68-73
CL350K0/K1/K2/K3/K4/K5	68-73
CB400F Super Sport	75-77
CB500K0/K1/K2	71-73
CB550F Super Sport	75-77
CB550K0/K1	74-75
CB550K	1976
GL1000K Goldwing	75-79
GL1000L Goldwing LTD	1976

Kawasaki

Model	Year
KZ400A1 Deluxe	1977
KZ400/D/D3/D4	74-77
KZ400S/S2/S3 Special	75-77

Yamaha

Model	Year
TX500/A	73-74
XS500B	1975

Keihin Slow & Main Jets

OEM (genuine) jets. **Made in Japan.**
See Intake section, page 149-152 for sizes.

Hitachi Carburetor Parts

Sudco Hitachi Type Main & Pilot Jets

KEYSTER brand, aftermarket screw-in type jets for Yamaha applications. Dealer kit includes qt 4 jets of sizes listed below. (Total 56 jets) with storage box. ***Made in Japan.***

Hitachi Type Main & Pilot Jet Kit Order No. **026-190**

Includes storage box and qt 4 each size of the following:
Main Jets: #110, #112, #116, #118, #120, #122, #124, #126, #128, #130, #132, #134, Pilot Jets: #40, #41

Hitachi Type Main Jets *Sold each.*

Size	OEM Reference	Order No.
#110	4H7-14925-10-00	026-110
#112	4H7-14925-12-00	026-112
#116	4H7-14925-16-00	026-113
#118	4H7-14925-18-00	026-114
#120	4H7-14925-20-00	026-115
#122	4H7-14925-22-00	026-116
#124	4H7-14925-24-00	026-117
#126	4H7-14925-26-00	026-118
#128	4H7-14925-28-00	026-119
#130	4H7-14925-30-00	026-120
#132	4H7-14925-32-00	026-121
#134	4H7-14925-34-00	026-122

Hitachi Type Pilot Jets *Sold each.*

Size	OEM Reference	Order No.
#40	4X7-14984-40-00	026-145
#41	4X7-14984-41-00	026-146

Yamaha

Model	Year
XJ650G/H/J/K Maxim	80-83
XJ650LH Midnight Maxim	1981
XJ650RJ Seca	1982
XJ700N/NC/S/SC Maxim	85-86
XJ750RH/RJ/RK Seca	81-83
XV700L/LC/N/NC Virago	84-85
XV700CS/CSC/CT/CTC Virago	86-87
XV700SS/SSC Virago	1986
XJ750J/K Maxim	82-83
XJ750MK Midnight Maxim	1983
XV750H/J/K Virago	81-83
XV750MK Midnight Virago	1983
XV920J/K Virago	82-83
XV920MK Midnight Virago	1983
XV920RH/RJ Euro	81-82
XV1000L/LC/N/NC	84-85
XV1100S/SC/T/TC Virago	86-87

Sudco Hitachi Type Needle Valve Assemblies

KEYSTER brand, aftermarket type needle valve assemblies for Yamaha applications. Sold each. ***Made in Japan.***

Application	OEM Reference	Order No.
XS850 (80-81)	3J3-W1496-20-00	026-300
XJ650/XJ750/XV750/XV920	10L-14390-02-00	026-302
See 10L-14390-02-00	42H-14390-00-00	026-302

Sudco Hitachi Float Bowl Gaskets

Aftermarket type for Yamaha applications.
Sold each. ***Made in Japan.***

Application	OEM Reference	Order No.
XJ650/XJ750 (80-83)	4H7-14984-01-00	026-320
XV750 (81-83),XV920 (1982)	4X7-14984-01-00	026-322
XV1000 (84-85)	10L-14984-01-00	026-324
XS850 (80-81)	3J3-14984-00-00	026-326

Yamaha

Model	Year	Needle Valve	Float Bowl Gasket
XJ650G/H/J/K Maxim	80-83	026-302	026-320
XJ650LH Midnight Maxim	1981	026-302	026-320
XJ650RJ Seca	1982	026-302	026-320
XJ700N/NC Maxim	1985	026-302	026-320
XJ700S/SC Maxim	1986	026-302	026-320
XJ750J/K Maxim	82-83	026-302	026-320
XJ750MK Midnight Maxim	1983	026-302	026-320
XJ750RH/RJ/RK Seca	81-83	026-302	026-320
XV750H/J/K Virago	81-83	026-302	026-322
XV750MK Midnight Virago	1983	026-302	026-322
XS850G/H	80-81	026-300	026-326
XS850LG/LH Midnight Special	80-81	026-300	026-326
XS850SG/SH Special	80-81	026-300	026-326
XV920J Virago	1982	026-302	026-322
XV920K Virago	1983	026-302	026-324
XV920MK Midnight Virago	1983	026-302	026-324
XV920RH/RJ	81-82	026-302	026-322
XV1000L/LC/N/NC Virago	84-85	026-302	026-324
XV1100S/SC/T/TC Virago	86-87	026-302	026-324

Mikuni Pilot & Main Jets

OEM (genuine) jets. ***Made in Japan.***

See Intake section, page 213-216 for sizes.

007-783

007-782

007-785

007-781

Carb Pump Diaphragm Valve Sets

Each set contains one diaphragm with rod attached, one rubber boot for rod, spring and o-ring as required. Sold as a set, three or four piece as noted. ***Made in Japan.***

Honda

OEM Reference 16021-ME2-771 (4 pc. set) **Order No.** 007-783
1602-MG1-671 - Diaphragm with 55.60mm long rod, spring, rubber boot for rod, and o-ring for passageway.

Model	Year
CX650C	1983
GL650	1983
GL650I	1983
CB1000C	1983
CB1100F Super Sport	1983

OEM Reference 16021-679-005 (3 pc. set) **Order No.** 007-782
Diaphragm with 54.01mm long rod, spring, rubber boot for rod.

Model	Year
CB750C Custom	80-82
CB750F Super Sport	79-82
CB750K	79-82
CB750L LTD	1979
CB750SC Nighthawk 750	82-83
CB900C Custom	80-82

OEM Reference 16021-MW8-000 (3 pc. set) **Order No.** 007-785
16021-MN5-0074, 16021-MT8-000, 16021-MAM-A80
Diaphragm with 31.31mm long rod, spring, rubber boot for rod.

Model	Year
GL1500 Goldwing	88-90
GL1500A Goldwing Aspencade	91-00
GL1500I Goldwing Interstate	91-96
GL1500SE Goldwing SE	90-00

007-784

OEM Reference 16021-422-004 (3 pc. set) **Order No.** 007-784
Diaphragm with 50.88mm long rod, spring, rubber boot for rod.

Model	Year
CBX1000 (1047cc) Super Sport	79-82

Honda

OEM Reference 16021-413-751 (4 pc. set) **Order No.** 007-781
16021-438-671, 16021-463-004 - Diaphragm with 54.13mm long rod, spring, rubber boot for rod.

Model	Year
CM250C Custom	1983
CB400T Hawk	80-81
CM400A Automatic	80-81
CM400C Custom	1981
CM400E	80-81
CM400T	80-81
CB450SC Nighthawk	1982
CB450T Hawk	1982
CM450C Custom	1982
CM450E	1982
CX500C Custom	80-82
CX500D Deluxe	80-81
GL500 Silverwing	81-82
GL500I Silverwing Interstate	81-82
CB900F Super Sport	81-82
GL1100 Goldwing	80-83
GL1100A Goldwing Aspencade	82-83
GL1100I Goldwing Interstate	80-83

007-780

OEM Reference 16021-MC9-771 (3 pc. set) **Order No.** 007-780
16021-393-004, 16021-393-014 - Diaphragm with 89.46mm long rod, spring, rubber boot for rod.

Model	Year
CB450SC Nighthawk	1983
CB450SC Nighthawk	85-86
CM450E	1983
CB750A Automatic	76-78
CB750F Super Sport	77-78
CB750K	77-78

Accel. Pump Rebuild Kit & Air Cut-Off Valve Set

Air Cut-Off Valve Set

This high quality set includes diaphragm, spring and o-ring. Honda Reference for kit: 16048-429-771, 16029-429-671. **Made in Japan.**

Order No. 018-901

Honda

Qt	OEM Reference	Description
1		Diaphragm
1		Spring
1		"U-Ring" O-ring

Applications	Year
XL250S Dual Sport	80-81
CB400T Hawk	80-81
CM400A Automatic	80-81
CM400C Custom	1981
CM400E	80-81
CM400T	80-81
CB450T Hawk	1982
CM450A Automatic	82-83
CM450C Custom	1982
CM450E	82-83
CX500C Custom	80-82
CX500D Deluxe	80-81
GL500 Silverwing	81-82
GL500I Silverwing Interstate	81-82
CB650	1980
CB650C Custom	1980
CB750C Custom	80-82
CB750F Super Sport	80-82
CB750K	80-82
CB750SC Nighthawk	82-83
CB900C Custom	80-82
CB900F Super Sport	81-82
GL1100	80-83
GL1100A Goldwing Aspencade	82-83
GL1100I Goldwing Interstate	80-83

See Intake section, page 232-235 for additional models.

K&L Accelerator Pump Rebuild Kit

Eight piece kit fits Kawasaki Vintage KZ650/KZ1000 models listed from 1979-1981. **Made in Japan.**

Order No. 018-863

Kawasaki OEM Mikuni VM Carburetor

Qt	OEM Reference	Description
Qt.1	43028-1012	Carb Pump Diaphragm (square)
Qt.1	43028-1010	Carb Pump Sensor Diaphragm (rectangular)
Qt.1	92081-1137	Carb Pump Sensor Diaphragm Spring
Qt.1	92081-1139	Carb Pump Diaphragm Spring
Qt.1	16038-016	Check Valve O-ring
Qt.1	92037-1123	Check Valve Clamp Spring (clip)
Qt.1	13042-1004	Check Valve Weight
Qt.1	92140-1003	Check Valve Ball (steel)

Applications, Kawasaki OEM Mikuni VM only	Year
KZ650B3/C3/D2	1979
KZ650E1 LTD	1980
KZ650F1	1980
KZ650H1 CSR	1981
KZ1000A3/A3A/A4 MKII	79-80
KZ1000B3/B4 LTD	79-80
KZ1000C2/C3/C4 Police	79-81
KZ1000D3 Z1R	1980
KZ1000E1/E2 Shaft ST	79-80

007-771

007-773

007-775

007-772

007- 774

Sudco Mikuni Carb Slide Diaphragms

GENUINE Mikuni Carb Slide Diaphragms for vintage Yamaha models listed. Fits OEM carburetors. **Made in Japan.** *Sold each.*

Yamaha

Carb Slide Diaphragm 41R-14940-09-00,	**Order No. 007-775**
Model	**Year**
XV535A/AC Virago	1990
XV535E/EC/F/FC/G/GC Virago	93-95
XV535H/HC/J/JC Virago	96-97
XV535SF/SFC/SG/SGC Virago	94-95
XV535SH/SHC/SJ/SJC/SK/SKC Virago	96-98
XV535L/LC/M/MC Virago 535	99-00
XVZ12TK/L/KC2 Venture	83-84
XVZ12TDK Venture Royale	198
XVZ12DN Venture Royale	1985

Carb Slide Diaphragm 50H-14940-00-00,	**Order No. 007-773**
FJ1100N	1985
FJ1200S/SC/T/TC	86-87
FJ1200W/WC/A/AC/B/BC/D/DC	89-92
FJ1200AD/ADC/AE/AEC (ABS)	92-93

Carb Slide Diaphragm 256-14940-00-00,	**Order No. 007-774**
256-14940-01-00	
XS500C/D	76-77
XS1/XS1-B/XS2-650	70-72
TX650/A	73-74
XS650B/C/D	75-77

007-770

Yamaha

Carb Slide Diaphragm 2F3-14940-00-00,	**Order No. 007-770**
2A2-14940-00-00	
Model	**Year**
XS400D/E/2E/F/2F	77-79
XS750E/F	78-79
XS750SE/SF Special	78-79
XS1100E/F	78-79
XS1100SF Special	1979

Carb Slide Diaphragm 1FK-14940-09-00	**Order No. 007-771**
VMX12N/NC/S/SC V-Max	85-86
VMX12U/UC/W/WC/A/AC/B/BC V-Max	88-91
VMX12D/DC/E/EC/F/FC/G/GC V-Max	92-95
VMX12H/HC/J/JC/K/KC/L/LC V-Max	95-99
VMX12M/MC/N/NC/P/PC/R/S/SC V-Max	00-04
VMX12T/TC/V/VC/W1/W1C V-Max	05-07
XVZ13T/TC/U/UC Venture	87-88
XVZ13DS/DSC/DT/DTC Venture Royale	86-87
XVZ13DU/DUC/DW/DWC Venture Royale	88-89
XVZ13DA/DAC/DB/DBC Venture Royale	90-91
XVZ13DD/DDC/DE/DEC Venture Royale	92-93

Carb Slide Diaphragm 3F7-14940-00-00,	**Order No. 007-772**
3H5-14940-00-00	
SR250G/H/J Exciter	80-82
SR250TH Exciter	1981
XS650G/H Special II	80-81
XS650SG/SH Special	80-81
XS650SJ/SK Heritage Special	82-83
XJ900RK Seca	1983
XJ1100J Maxim	1982
XS1100G/H	80-81
XS1100LG/LH Midnight Special	80-81
XS1100SG/SH Special	80-81

Fuel Valves

Adapter Plate

Adapter Nut

Power-Flo Fuel Valve

Pingel Power-Flo™ Fuel Valves

Pingel® Fuel Valves provide more fuel flow than OEM petcock. This is a must with drag, racing and high performance vintage applications. Manufactured from billet with high quality stainless steel components. Power-Flo™ fuel valves feature highly polished aluminum or highly polished chrome-plated brass finishes with either 1/4"NPT, 3/8"NPT or HD metric thread 22mm. 5/16" outlet in single, dual or triple with or without reserve. Fuel Valves listed sold each. **Note: See page 263-264 for additional details.**

Honda

Model	Year	Fuel Valve Pingel No.	Reserve	Outlet 5/16"	Order No.	Description/Notes	Adapter Pingel No.	Order No.
CB1100F Super Sport	1983	6111-AH	Yes	Single	009-307	Adapter Nut required	A2000C	009-370
CBX	79-81	6111-AH	Yes	Single	009-307	Adapter Nut required	A2003C	009-371
CBX	1982	6111-AH	Yes	Single	009-307	Adapter Nut required	A2000C	009-370

Kawasaki

S1A/S1B/S1C-250	73-75	8210T-AH	No	Triple	009-316	Adapter Nut required	A2001C	009-365
KH250A5	1976	8210T-AH	No	Triple	009-316	Adapter Nut required	A2001C	009-365
S2/S2A-350	72-73	8210T-AH	No	Triple	009-316	Adapter Nut required	A2001C	009-365
S3/S3A-400	74-75	8210T-AH	No	Triple	009-316	Adapter Nut required	A2001C	009-365
KH400A3/A4/A5	76-78	8210T-AH	No	Triple	009-316	Adapter Nut required	A2001C	009-365
H1/H1A/H1B/H1C-500	69-72	8210T-AH	No	Triple	009-316	Adapter Nut required	A2002C	009-366
H2/H2A/H2B/H2C-750	72-75	8210T-AH	No	Triple	009-316	Adapter Nut required	A2002C	009-366
Z1/A/B-900, KZ900A4/A5	73-77	6311-AH		Single	009-302	Adapter included	———	———
KZ1000 w/thread on valve		6311-AH		Single	009-302	Adapter included	———	———
		3311-D-AH		Dual	009-334	Adapter included	———	———
KZ1000/1100 w/bolt-on valve		6211-AH		Single	009-305	Adapter Plate required	A1702C	009-352
		3211-D-AH		Dual	009-311	Adapter Plate required	A1702C	009-352
KZ1300A	79-82	6211-AH	Yes	Single	009-305	Adapter Plate required	A1702C	009-352

Suzuki

GS750/1000/1100E	79-83	6211-AH		Single	009-305	Adapter Plate required	A1702C	009-352
		3211-D-AH		Dual	009-311	Adapter Plate required	A1902C	009-357
GS1150E	84-85	6211-AH		Single	009-305	Adapter Plate required	A1702C	009-352
		3211-D-AH		Dual	009-311	Adapter Plate required	A1902C	009-357

For Suzuki models listed, order adapter plate required.

Sudco Fuel & Vacuum Hose Clips

OEM sized fuel and vacuum hose clips. Sold pk/5.
Made in Japan.

Description	Order No.
1/4" (6mm) I.D.	009-090
9/32" (7mm) I.D.	009-091
5/16" (8mm) I.D.	009-092
3/8" (9mm) I.D.	009-093

Fuel Line, Vent Hose, Primer Hose & Fuel Filters

See Intake Section, page 269-270.

Fuel Petcock Diaphragm Set NEW

Set includes diaphragm and seals. Fits Kawasaki H1-500 and H2 750 vintage 2-stroke triple models.

Order No. **009-490**

Fuel Petcock Repair Kits

009-405

009-402

K&L Fuel Petcock Repair Kits

Kit contains all necessary o-rings and diaphragms to rebuild one fuel petcock. Sold in kits. ***Made in Japan.*** Note: Does not include plastic diaphragm spacer block.

Honda Street

Model	Year	Fuel Petcock Repair Kit	Diaphragm Only
VTR250 Interceptor	88-90	009-405	—
CB450SC Nighthawk	85-86	009-405	—
CMX450C Custom	86-87	009-405	—
CX500C Custom	81-82	009-405	—
CX500D Deluxe	81-82	009-405	—
FT500 Ascot	82-83	009-405	—
GL500I Silverwing Interstate	81-82	009-405	—
VT500C Shadow	83-86	009-405	—
VT500FT Ascot	1984	009-405	—
CB550SC Nighthawk	1983	009-405	—
XL600V Transalp	89-90	009-405	—
CB650SC Nighthawk	83-85	009-405	—
CX650C Custom	1983	009-405	—
GL650I Silverwing Interstate	1983	009-405	—
CB700SC Nighthawk	84-86	009-405	—
VF700S Sabre	84-85	009-405	—

Kawasaki Street

S1A/B/C-250 (two stroke triple)	73-75	009-414	—
KH250A5 (two stroke triple)	1976	009-414	—
S2/A-350 (two stroke triple)	72-73	009-414	—
S3/A-400 (two stroke triple)	74-75	009-414	—
KH400A3/A4 (two stroke triple)	76-77	009-414	—
KZ550A1/A2/A3/A4	80-83	009-402	009-501
KZ550C1/C2/C3/C4 LTD	80-83	009-402	009-501
KZ550D1 GPz	1981	009-402	009-501
KZ550F1/F2 Spectre & LTD	83-84	009-421	009-502
KZ550H1/H2 GPz	82-83	009-421	009-502
KZ550M1 LTD	1983	009-421	009-502
ZR550B1/B2	90-91	009-435	009-506
ZR550B3/B4 (Canadian models)	92-93	009-435	009-506
ZX550A1/A2 GPz	84-85	009-421	009-502
KZ650B3	1979	009-403	009-500
KZ650E1/F1	1980	009-403	009-500
KZ650H1 CSR	1981	009-402	009-501
KZ650H2/H3 CSR	82-83	009-403	009-500
KZ700A1	1984	009-403	009-500
VN700A1 Vulcan	1985	009-421	009-502
ZN700A1/A2 LTD	84-85	009-421	009-502
KZ750B1/B2/B3/B4 (2 cylinder)	76-79	009-414	—
KZ750E1/E2/E3	80-82	009-403	009-500
KZ750F1 LTD	1983	009-421	009-502
KZ750G1 LTD (2 cylinder)	1980	009-414	—
KZ750H1/H2/H3/H4 LTD	80-83	009-403	009-500
KZ750K1 LTD (2 cylinder)	1983	009-402	009-501

Kawasaki Street

Model	Year	Fuel Petcock Repair Kit	Diaphragm Only
KZ750K2 LTD (2 cylinder, Canadian model)	1984	009-402	009-501
KZ750L3	1983	009-403	009-500
KZ750M1 CSR (2 cylinder)	1982	009-402	009-501
KZ750N1/N2 Spectre	82-83	009-421	009-502
KZ750R1 GPz	1982	009-403	009-500
ZR750C1/C2	91-92	009-435	009-506
ZR750C3 (Canadian model)	1993	009-435	009-506
ZR750F2 ZR-7	2000	009-435	009-506
ZX750A1/A2/A3 GPz	83-85	009-403	009-500
Z1/A/B-900	73-75	009-414	—
KZ900A4/A5	76-77	009-414	—
KZ900B1 LTD	1976	009-414	—
ZL900A1/A2 Eliminator	85-86	009-408	009-500
ZX900A1/A2/A3 Ninja	84-86	009-403	009-500
KZ1000A1	1977	009-414	—
KZ1000A2/A2A	1978	009-413	—
KZ1000A3/A3A/A4 MKII	79-80	009-413	—
KZ1000B1/B2/B3/B4 LTD	77-80	009-414	—
KZ1000C1 Police (manual petcock)	1978	009-414	—
KZ1000C1A-C4 Police (vacuum petcock)	78-81	009-413	—
KZ1000D1 Z1R	1978	009-414	—
KZ1000D3 Z1R	1980	009-414	—
KZ1000E1/E2 Shaft ST	79-80	009-407	—
KZ1000G1 LTD Classic	1980	009-414	—
KZ1000J1/J2	81-82	009-407	—
KZ1000K1/K2 LTD	81-82	009-403	009-500
KZ1000M1/M2 CSR	81-82	009-403	009-500
KZ1000P1-P21 Police	82-02	009-403	009-500
KZ1000P24 Police	2005	009-403	009-500
KZ1000R1/R2 Replica	82-83	009-407	—
ZG1000A1-A20 Concours	86-05	009-408	009-500
ZL1000A1 Eliminator	1987	009-408	009-500
ZX1000A1/A2 Ninja 1000R	86-87	009-408	009-500
KZ1100A1/A2/A3 Shaft	81-83	009-407	—
KZ1100D1/D2 Spectre	82-83	009-403	009-500
KZ1100L1 LTD	1983	009-403	009-500
ZN1100B1/B2 LTD 1100	84-85	009-403	009-500
ZX1100A1/A2 GPZ	83-84	009-414	—

Suzuki Street

GS300LZ/LD	82-83	009-475	009-503
GS300LF	1985	009-475	009-503
GS400B/XB/C/XC	77-78	009-479	009-504
GS425N/EN/LN	1979	009-479	009-504
GS450ED	1983	009-475	009-503
GS450GAZ/GAD Automatic	82-83	009-475	009-503
GS450GAF Automatic	1985	009-475	009-503
GS450LD	1983	009-475	009-503
GS450LF/LG/LH/LJ	85-88	009-475	009-503

Fuel Petcock Repair Kits

Suzuki Street

Model	Year	Fuel Petcock Repair Kit	Diaphragm Only
GS450TX/TZ	81-82	009-475	009-503
GS450TXZ/TXD	82-83	009-475	009-503
GS550ES3/ESE/EF/ESF/ESG	83-86	009-475	009-503
GS550LT	1980	———	009-504
GS550LX/LZ	81-82	009-475	009-503
GS550LF/LG	85-86	009-475	009-503
GS550MZ Katana	1982	009-475	009-503
GS550TX	1981	009-475	009-503
GR650D/XD Tempter	1983	009-475	009-503
GS650EX/EZ	81-82	009-475	009-503
GS650GX/GZ/GD	81-83	009-475	009-503
GS650GLX/GLZ/GLD	81-83	009-475	009-503
GS650MD Katana	1983	009-475	009-503
GS700EF/ESF	1985	009-475	009-503
GS750B/C/EC/N/EN	77-79	009-479	009-504
GS750ET	1980	———	009-504
GS750EX/EZ/ED/ESD	81-83	009-475	009-503
GS750LT	1980	———	009-504
GS750LX	1981	009-475	009-503
GS750SD Katana	1983	009-475	009-503
GS750TZ/TD	82-83	009-475	009-503
GSX-R750RG	1986	009-475	009-503
GSX-R750G/H	86-87	009-475	009-503
GS850GN/GT/GX	79-81	009-479	009-504
GS850GLT	1980	———	009-504
GS850GLX/GLZ/GLD	81-83	009-475	009-503
GS1000C/EC/N/EN/SN	78-79	009-479	009-504
GS1000ET	1980	———	009-504
GS1000GT/GX	80-81	009-479	009-504
GS1000GLT	1980	———	009-504
GS1000GLX	1981	009-475	009-503
GS1000ST	1980	———	009-504
GS1000SZ	1982	009-475	009-503
GS1100ET	1980	———	009-504
GS1100EX/EZ/ED/ESD	81-83	009-475	009-503
GS1100GZ/GLZ/GD/GLD	82-83	009-475	009-503
GS1100GKZ/GK2/GKD/GKE	82-84	009-475	009-503
GS1100LT	1980	———	009-504
GS1100SD Katana	1983	009-475	009-503
GSX1100FJ/FK/FL/FM/FN/FP Katana	88-93	009-440	009-509
GSX-R1100G/H/J	86-88	009-475	009-503
GSX-R1100K/L/M/N	89-92	009-480	009-504
GS1150ES3/ESE/EF/ESF	83-85	009-475	009-503

Yamaha Street

Model	Year	Fuel Petcock Repair Kit	Diaphragm Only
SR250G/H/J Exciter	80-82	009-402	009-501
SR250TH Exciter	1981	009-402	009-501
XS360C/D/2D	76-77	009-400	009-504
XS400D	1977	009-400	009-504
XS400E/F/2F/G/H	78-81	009-403	009-500
XS400SG/SH Special	80-81	009-403	009-500
XS400J/K Maxim	82-83	009-402	009-501
XS400RJ/RK Seca	82-83	009-402	009-501
SR500E/F/G/H	78-81	009-400	009-504
XS500E	1978	009-400	009-504
XV535A/AC Virago	1990	009-443	———
XV535E/EC-L/LC Virago	93-99	009-443	———
XV535SF/SFC-SJ/SJC Virago	94-97	009-443	———
XJ550H/J/K Maxim	81-83	009-402	009-501
XJ550RH/RJ/RK Seca	81-83	009-402	009-501
XZ550RJ/RK Vision	82-83	009-402	009-501
FJ600L/LC/N/NC	84-85	009-402	009-501

Yamaha Street

Model	Year	Fuel Petcock Repair Kit	Diaphragm Only
FZ600S/SC/T/TC/U/UC	86-88	009-427	009-506
FZR600W/WC/A/AC*	89-90	009-424	———
FZR600RA/RAC-RL/RLC*	90-99	009-424	———
SRX600S/SC	1986	009-402	009-501
XJ650G/H/J/K Maxim	80-83	009-402	009-501
XJ650LH Midnight Maxim	1981	009-402	009-501
XJ650RJ Seca	1982	009-402	009-501
XS650E	1978	009-400	009-504
XS6502F	1979	009-403	009-500
XS650G/H Special II	80-81	009-403	009-500
XS650SH/SJ/SK Heritage	81-83	009-403	009-500
XJ700N/NC/S/SC Maxim	85-86	009-403	009-500
XJ700XN/XNC/XS/XSC Maxim X	85-86	009-403	009-500
XV700L/LC/N/NC Virago	84-85	009-402	009-501
XV700CS/CSC/CT/CTC Virago	86-87	009-402	009-501
XV700SS/SSC Virago	1986	009-402	009-501
XJ750RH/RJ/RK Seca	81-83	009-402	009-501
XS750D/2D/E/F	77-79	009-400	009-504
XS750SE after frame no. 311211	1978	009-403	009-500
XS750SF	1979	009-403	009-500
XV750H/J/K Virago	81-83	009-402	009-501
XV750MK Midnight Virago	1983	009-402	009-501
XV750U/UC-K1/KC1 Virago	88-98	009-442	———
XS850SG/SH Special	80-81	009-403	009-500
XJ900RK Seca	1983	009-403	009-500
XV920J/K Virago	82-83	009-402	009-501
XV920MK Midnight Virago	1983	009-402	009-501
XV920RH/RJ/RK	81-83	009-402	009-501
XS1100E/F/G/H	78-81	009-400	009-504

Honda Fuel Petcock NEW

Fuel Petcock for vintage Honda 2-cyl models. Sold each.
Replaces Honda OEM 16950-292-000.

Order No. 009-382

Honda

Model	Year
CL175K4/K5 Scrambler 175	70-71
CB350G Super Sport	1973
CB350K0/K1/K2/K3/K4	68-73
CL350K0/K1/K2/K3/K4/K5	68-73
SL350K0/K1/K2 Moto Sport 350	70-72
CB360	1974
CB360G	1973
CL360/K1 Scrambler 360	74-75
CB450K0-K7 Super Sport 450	66-74
CL450K0-K6	67-74

608-056

Vesrah Engine Gasket Sets

Gasket sets are available in complete and top end sets for the models listed. ***Made in Japan*** to OEM specifications. For models not listed, see Engine section. **Please call for availability.**

Honda Street

Model	Year	Complete	Top End
CB92 Benley Super Sport 125	59-62	608-140	———
CB92R Benley Super Racer 125	61-62	608-140	———
CB72 Hawk 250	61-66	608-160	———
CL72 Scrambler 250		608-160	———
CB77 305 Super Hawk 305	61-68	608-162	———
CL77 Scrambler 305	65-68	608-162	———
CB350G	1973	608-012	———
CB350/K1-K4 Super Sport	68-73	608-012	———
CL350/K1-K5 Scrambler	68-73	608-012	———
SL350/K1/K2 Moto Sport	70-72	608-012	———
CB400A Automatic	1978	608-053	———
CB400F Super Sport	75-77	608-170	———
CB400T1 Hawk	78-79	608-053	———
CB400TII Hawk	78-79	608-053	———
CB400T Hawk	80-81	608-053	———
CM400A Automatic	79-81	608-053	———
CM400C Custom	1981	608-053	———
CM400E	80-81	608-053	———
CM400T	79-81	608-053	———
CB450K1-K7 Super Sport	68-74	608-0152	———
CL450K1-K6 Scrambler	68-74	608-0152	———
CX500	78-79	608-052	———
CX500C Custom	79-82	608-052	———
CX500D Deluxe	79-81	608-052	———
GL500 Silverwing	81-82	608-052	———
GL500I Silverwing Interstate	81-82	608-052	———
CB550/K1	74-75	———	609-050
CB550K	76-78	———	609-050
CB550F Super Sport	75-77	———	609-050
CB550SC Nighthawk	1983	608-1072	609-5072
CB650SC Nighthawk	83-85	608-1072	609-5072
CX650C Custom	1983	608-094	609-094
GL650 Silverwing	1983	608-094	609-094
GL650I Silverwing Interstate	1983	608-094	609-094
CB750A Automatic	76-78	608-048	609-045
CB750C Custom	80-82	608-056	609-055
CB750F Super Sport	75-78	608-048	609-045
CB750F Super Sport	79-82	608-056	609-055
CB750K2/K3	70-73	608-0156	———
CB750K4/K5	74-75	608-048	609-045
CB750/K	76-78	608-048	609-045
CB750K	79-82	608-056	609-055
CB750L LTD	1979	608-056	609-055

Honda Street

Model	Year	Complete	Top End
CB750SC Nighthawk	82-83	608-056	609-055
CB900C Custom	80-82	608-057	———
CB900F Super Sport	81-82	608-057	———
GL1000K Goldwing	75-79	———	609-046
GL1000L Goldwing LTD	1975	———	609-046
CB1100F Super Sport	1983	608-097	609-097
GL1100 Goldwing	80-83	608-067	———
GL1100A Goldwing Aspencade	82-83	608-067	———
GL1100I Goldwing Interstate	80-83	608-067	———
GL1200 Goldwing	1984	———	609-5106
GL1200A Goldwing Aspencade	1984	———	609-5106
GL1200A Goldwing Aspencade	85-87	608-1107	609-5106
GL1200I Goldwing Interstate	1984	———	609-5106
GL1200I Goldwing Interstate	85-87	608-1107	609-5106

Kawasaki Street

AR50A1	1982	———	———
KZ200A1/A2	78-79	608-624	———
S1A/B/C-250 (2 stroke triple)	73-75	608-650	———
KH250A5 (2 stroke triple)	1976	608-0433	———
S2-350/A (2 stroke triple)	72-73	608-655	———
S3/S3A-400 (2 stroke triple)	74-75	608-656	———
KH400A3/A4/A5 (2 stroke triple)	76-78	608-656	———
KZ400B1/B2	78-79	608-0497	———
KZ400C1	1978	608-0497	———
KZ400H1 LTD	1978	608-0497	———
KZ440A1/A2/A3/A4 LTD	80-83	608-0457	———
KZ440B1/B2	80-81	608-0457	———
KZ440D1-D5 LTDBelt	80-83	608-0457	———
H1/A/B/C-500 Mach III	69-72	608-0421	———
H1D/E/F-500 (2 stroke triple)	73-75	608-0431	———
KH500A8 (2 stroke triple)	1976	608-0431	———
KZ550C4 LTD	1983	608-0464	———
KZ550D1 GPz	1981	608-0455	609-0855
KZ550F1 Spectre	1983	———	———
KZ550F2 LTD Shaft	1984	———	———
KZ550H1/H2 GPz	82-83	608-640	609-640
ZX550A1/A2/A3 GPz	84-86	———	609-643
ZX600A1/A2/A3 Ninja 600R	85-87	608-4011	609-8011
KZ650B1/B2/B2A	77-78	608-0481	609-0881
KZ650B3	1979	608-0482	609-0882
KZ650C1/C2 Custom	77-78	608-0481	609-0881
KZ650C3 Custom	1979	608-0482	609-0882
KZ650D1/D1A SR	1978	608-0481	609-0881
KZ650D2 SR	1979	608-0482	609-0882
KZ650E1 LTD	1980	608-0482	609-0882
KZ650F1	1980	608-0482	609-0882
W1-650 2-cylinder	66-69	608-4086	———
W1SS-650 2-cylinder	68-69	608-4086	———
W2-SS650 2-cylinder	67-70	608-4086	———
KZ700A1	1984	608-644	———
ZN700A1/A2 LTD Shaft	84-85	608-644	———
H2/A/B/C-750 (2 stroke triple)	72-75	608-665	———
KZ750E1/E2/E3	80-82	608-0488	609-0848
KZ750F1 LTD Shaft	1983	608-631	609-631
KZ750H1/H2/H3 LTD	80-82	608-0488	609-0848
KZ750H4 LTD	1983	608-631	609-631
KZ750L3	1983	608-631	609-631
KZ750N1/N2 Spectre	82-83	608-631	609-631
ZX750A1/A2/A3 GPz	83-85	608-631	609-631
ZX750E1/E2 GPz Turbo	84-85	———	———
Z1A/B-900	74-75	608-618	609-0824
KZ900A4/A5	76-77	608-618	609-0824
KZ900B1 LTD	1976	608-618	609-0824

Engine Gasket Sets

Kawasaki Street

Model	Year	Complete	Top End
KZ1000A1/A2/A2A	77-78	608-0436	609-0836
KZ1000A3/A3A/A4 MKII	79-80	608-619	609-611
KZ1000B1/B2 LTD	77-78	608-0436	609-0836
KZ1000B3/B4 LTD	79-80	608-619	609-611
KZ1000C1/C1A Police	1978	608-0436	609-0836
KZ1000C2/C3/C4 Police	79-81	608-619	609-611
KZ1000D1 Z1R	1978	608-0436	609-0836
KZ1000D3 Z1R	1980	608-619	609-611
KZ1000E1/E2 Shaft ST	79-80	———	609-611
KZ1000G1 LTD Classic	1980	608-619	609-611
KZ1000J1/J2/J3	81-83	608-620	609-0839
KZ1000K1/K2 LTD	81-82	608-620	609-0839
KZ1000M1/M2 CSR	81-82	608-620	609-0839
KZ1000P1-P21 Police	82-02	608-620	609-0839
KZ1000R1/R2 Replica	82-83	608-620	609-0839
KZ1100A1/A2/A3 Shaft	81-83	608-621	609-0847
KZ1100B1/B2 GPz	81-82	608-621	609-0847
KZ1100D1/D2 Spectre	82-83	608-621	609-0847
KZ1100L1 LTD Shaft	1983	608-621	609-0847
ZN1100B1/B2 LTD Shaft	84-85	608-642	609-0847
ZX1100A1/A2 GPz	83-84	608-642	609-0847
KZ1300A1/A2/A3/A4	79-82	608-4010	609-8010
KZ1300B2 Touring	1980	608-4010	609-8010

Suzuki Street

GT380 J/K/L/M/A/B Sebring	72-77	———	———
GS400B/XB/C/XC	77-78	———	———
GS450ET/EX/EZ	80-82	———	———
GS450LT/LX	80-81	———	———
GS450ST/SX	80-81	———	———
GS450TX	1981	———	———
T500R/J/K/L/M Titan	71-75	608-0329	———
GT500A/B	76-77	608-0329	———
GS550B/C/EC/N/EN/ET	77-80	608-0345	———
GS550LN/LT/LX/LZ	79-82	608-0345	———
GS700EEF/ESF	1985	———	———
GS750ET/EX	80-81	———	609-0759
GS750EZ	1982	———	———
GS750ED/ESD	1983	608-3003	609-7003
GS750LT/LX	80-81	———	609-0759
GS750TZ/TD	82-83	———	———
GS750SD Katana	1983	608-3002	609-7002
GS850GN/GT/GX	79-81	608-440	———
GS850GZ/GD	82-83	———	———
GS850GLT/GLX	80-81	608-440	———
GS850GLZ/GLD	82-83	———	———
GS1000C/EC/N/EN/ET	78-80	608-0352	———
GS1000LN	1979	608-0352	———
GS1000SN/ST	79-80	608-0352	———
GS1100ET/EX	80-81	608-421	———
GS1100EZ	1982	608-0380	———
GS1100ED/ESD	1983	608-429	———
GS1100GZ/GD	82-83	608-430	———
GS1100GLZ/GLD	82-83	608-430	———
GS1100GKZ/GK2/GKD/GKE	82-84	608-430	———
GS1100LT	1980	608-421	———
GS1100SD Katana	1983	608-429	———
GS1150ES3/ESE/EF/ESF/EF2	83-85	———	609-7027

Yamaha Street

Model	Year	Complete	Top End
YSR50T/U/W/A/B/D	87-92	608-2057	———
RD350/A/B	73-75	608-0251	609-205
RZ350L/N/NC/NCII	84-85	608-255	609-255
RD400C/D/E/F	77-79	608-0261	———
RS500LCL	1984	———	609-6052
RD500LCN	1985	———	609-6052
(Canadian & European application only, RS500/RD500)			
SR500E/F/G/H	78-81	608-231	609-231
XT500C/D/E/F/G Dual Sport	76-81	608-231	609-231
XV500K Virago	1983	———	609-6023
XJ550H/J/K Maxim	81-83	608-253	609-253
XJ550RH/RJ/RK Seca	81-83	608-253	609-253
XT550J/K Dual Sport	82-83	608-240	———
XZ550RJ Vision	1982	608-2025	———
FJ600L/LC/N/NC	84-85	———	609-6051
FZ600S/SC/T/TC/U/UC	86-88	———	609-6051
SRX600S/SC	1986	608-254	609-254
XT600L/LC Dual Sport	1984	608-254	609-254
XT600T/TC Dual Sport	1987	608-254	609-254
YX600S/SC/T/TC/U/UC Radian	86-88	608-2063	609-6051
XJ650G/H Maxim	80-81	608-2016	609-6016
XJ650LH Midnight Maxim	1981	608-2016	609-6016
XJ650LJ/LK Seca Turbo	82-83	608-2017	609-6017
XJ650RJ Seca	1982	608-2016	609-6016
XS650B/C/D/E/F	75-79	608-0282	———
XS650G/H Special II	80-81	608-0282	———
XS6502F	1979	608-0282	———
XS650SE/SF/SG/SH Special	78-81	608-0282	———
XS650SJ/SK Heritage Special	82-83	608-251	609-251
FZ700T/TC	1987	608-2064	609-6064
FZ750N/S/SC	85-86	608-2064	609-6064
FZ750U/UC	1988	608-2064	609-6064
FZR750RT/RU	87-88	608-2064	609-6064
XJ750J/K Maxim	82-83	608-2014	———
XJ750MK Midnight Maxim	1983	608-2014	———
XJ750RH/RJ/RK Seca	81-83	608-2014	———
XV750H/J/K Virago	81-83	608-249	609-249
XV750MK Midnight Virago	1983	608-249	609-249
XV750U/UC/W/WC Virago	88-89	608-2081	609-6081
XS850G/H	80-81	608-2000	609-2000
XS850LG/LH Midnight Special	80-81	608-2000	609-2000
XS850SG/SH Special	80-81	608-2000	609-2000
XV920J/K Virago	82-83	608-248	609-248
XV920MK Midnight Virago	1983	608-248	609-248
XV920RH/RJ Virago	81-82	608-248	609-248
FZR1000U/UC	1988	608-2082	609-6082
XV1000L/LC/N/NC Virago	84-85	608-2050	609-6050
FJ1100L/LC/N/NC	84-85	608-2056	609-6056
XJ1100J Maxim	1982	608-0297	609-0697
XS1100E/F/G/H	78-81	608-250	609-250
XS1100LG/LH Midnight Special	80-81	608-250	609-250
XS1100SF/SG/SH Special	79-81	608-250	609-250
XV1100U/UC-F/FC Virago	88-94	608-2050	609-6050
FJ1200S/SC/T/TC	86-87	———	———

644-1022

645-1028

Vesrah Base & Head Gaskets

Replacement base and head gaskets for applications listed.
Sold each. ***Made in Japan.***

Honda Street

Model	Year	Base Gskt	Head Gskt
NT650 Hawk GT	88-91	———	644-1073
NX650	88-89	———	644-1081
VFR700F2 Interceptor	86-87	———	644-1047
CB750A Automatic	76-78	645-1028	644-1022
CB750C Custom	80-82	———	644-1023
CB750F Super Sport	75-78	645-1028	644-1022
CB750F Super Sport	79-82	———	644-1023
CB750/K1/K2/K3/K4/K5	69-75	645-1028	644-1022
CB750K	76-78	645-1028	644-1022
CB750K	79-82	———	644-1023
CB750L LTD	1979	———	644-1023
CB750SC Nighthawk	82-83	———	644-1023
VFR750F Interceptor	1986	———	644-1047
VFR1000F Interceptor	1984	———	644-1063
VFR1000R	1985	———	644-1063
VF1100C	83-86	———	644-1065
VF1100S	84-85	———	644-1065

Kawasaki Street

(Requires qt 2 for applications in red)

Model	Year	Base Gskt	Head Gskt
KZ650H1/H2/H3 CSR	81-83	645-4013	———
KZ700A1	1984	645-4013	———
ZN700A1/A2 LTD Shaft	84-85	645-4013	———
KZ750E1/E2/E3	80-82	645-4013	644-4015
KZ750F1	1983	645-4013	644-4015
KZ750H1/H2/H3/H4 LTD	80-83	645-4013	644-4015
KZ750L3	1983	645-4013	644-4015
KZ750N1/N2 Spectre	82-83	645-4013	644-4015
KZ750R1 GPz	1982	645-4013	644-4015
ZX750A1/A2/A3 GPz	83-85	645-4013	644-4015
ZX750E1/E2 GPz Turbo	84-85	645-4013	———
Z1900 (1 piece head gasket)	1973	645-4022	609-880
Z1A/B-900	74-75	645-4022	644-4021
KZ900A4/A5	76-77	645-4022	644-4021
KZ900B1 LTD	1976	645-4022	644-4021
ZL900A1/A2 Eliminator	85-86	645-4041	———
ZX900A1/A2/A3 Ninja 900	84-86	645-4041	———
KZ1000A1/A2/A2A	77-78	645-4022	644-4022
KZ1000A3/A3A/A4 MKII	79-80	645-4022	644-4022
KZ1000B1/B2 LTD/B3/B4 LTD	77-80	645-4022	644-4022
KZ1000C1/C1A/C2/C3/C4 Police	78-81	645-4022	644-4022
KZ1000D1 Z1R	1978	645-4022	644-4022
KZ1000D3 Z1R	1980	645-4022	644-4022
KZ1000A3/A3A/A4 MKII	79-80	645-4022	644-4022
KZ1000B1/B2 LTD/B3/B4 LTD	77-80	645-4022	644-4022
KZ1000C1/C1A/C2/C3/C4 Police	78-81	645-4022	644-4022
KZ1000D1 Z1R	1978	645-4022	644-4022
KZ1000D3 Z1R	1980	645-4022	644-4022
KZ1000E1/E2 Shaft ST	79-80	645-4022	644-4022

Kawasaki Street

(Requires qt 2 for applications in red)

Model	Year	Base Gskt	Head Gskt
KZ1000G1 LTD Classic	1980	645-4022	644-4022
KZ1000J1/J2/J3	81-83	645-4016	644-4023
KZ1000K1/K2 LTD	81-82	645-4016	644-4023
KZ1000M1/M2 CSR	81-82	645-4016	644-4023
KZ1000P1-P21 Police	82-02	645-4016	644-4023
KZ1000R1/R2 Replica	82-83	645-4016	644-4023
ZL1000A1 Eliminator	1987	645-4041	———
ZX1000A1/A2 Ninja 1000R	86-87	645-4041	———
ZX1000B1/B2/B3 Ninja ZX-10	88-90	645-4041	———
KZ1100A1/A2/A3 Shaft	81-83	645-4016	644-4024
KZ1100B1/B2 GPz	81-82	645-4016	644-4024
KZ1100D1/D2 Spectre	82-83	645-4016	644-4024
KZ1100L1 LTD Shaft	1983	645-4016	644-4024
ZN1100B1/B2 LTD Shaft	84-85	645-4016	644-4016
ZX1100A1/A2 GPz	83-84	645-4016	644-4016

Suzuki Street

GS-XR750G/H	86-87	———	644-3033
GS-XR750J/K	88-89	———	644-3033
GS1000C/EC/N	78-79	645-3004	644-3003
GS1000EN/ET	80-81	645-3004	644-3003
GS1000GT/GX	80-81	645-3004	644-3003
GS1000GLT/GLX	80-81	645-3004	644-3003
GS1000LN	1979	645-3004	644-3003
GS1000SN/ST	79-80	645-3004	644-3003
GS1100ED/ESD	1983	645-3005	644-3004
GS1100SD Katana	1983	645-3005	644-3004
GS1100GKZ/GKD/	82-83	———	644-3005
GS1100GZ/GLZ/GD/GLD	82-83	———	644-3005
GSX1100FJ-FN Katana	88-92	———	———
GSX-R1100G/H/J	86-88	———	———

Yamaha Street

DT125		645-2046	———
RD125LC (non USA model)	82-84	645-2048	———
RD350LC (non USA model)	1985	645-2005	644-2005
RZ350L/N/NC/NCII	83-84	645-2005	644-2005
RD400C/D/E/F	76-79	645-2004	644-2004
SR500E/F/G/H	78-81	645-2035	644-2035
XT500C/D/E/F/G/H	76-82	645-2035	644-2035
XS650B/C/D/E/F/2F	76-79	645-2036	644-2036
XS650SE/SF/SG/SH Special	78-81	645-2036	644-2036
XS650SJ/SK Heritage Special	82-83	645-2036	644-2036
FJ1100L/LC/N/NC	84-55	645-2038	———
XS1100J Maxim	1982	———	———
XS1100E/F/G/H	78-81	———	644-2026
XS1100LG/LH Midnight Special	80-81	———	644-2026
XS1100SF/SG/SH Special	79-81	———	644-2026

Cyl. Head Gasket, O-Rings, Cyl. Studs & H2 Hardware

609-880

650-001

650-005

Z1-900 One Piece Head Gasket

Replacement head gasket for 1973 Kawasaki Z1-900.
Sold each. ***Made in Japan.***

Kawasaki

OEM Ref. 11004-052, 11004-1269 **Order No.** 609-880

H2-750 Cylinder Head Bolt Kit

Kit includes 12 Zinc Plated Bolts, 12 Washers, 12 Spring Washers.
For Kawasaki H2-750 72-75.
Order No. 901-315

H2-750 Stub Nut Kit

Kit includes 12 lock nuts (10mm), 12 lock washers (10mm), 15 nuts (6mm), and 15 lock washers (6mm) all Zinc plated. For Kawasaki H2-750 72-75.
Order No. 901-330

Cylinder Head O-Rings

Kawasaki models. Sold each. ***Made in Japan.***

Kawasaki

OEM Ref. 92055-062 **Order No.** 650-001

Model	Year
Z1/A/B-900	73-75
KZ900A4/A5	76-77
KZ900B1 LTD	1976
KZ1000A1/A2	77-78
KZ1000A3/A3A/A4 MKII	79-80
KZ1000B1/B2/B3/B4 LTD	77-80
KZ1000C1/C1A/C2/C3/C4 Police	78-81
KZ1000D1 Z1R	1978
KZ1000D3 Z1R	1980
KZ1000E1/E2 Shaft ST	79-80
KZ1000G1 LTD Classic	1980

OEM Ref. 11009-1208 **Order No.** 650-005

Model	Year
KZ1000J1/J2/J3	81-83
KZ1000K1/K2 LTD	81-82
KZ1000M1/M2 CSR	81-82
KZ1000P1-P21 Police	82-02
KZ1000P24 Police	2005
KZ1000R1/R2 Replica	82-83
KZ1100A1/A2/A3 Shaft	81-83
KZ1100B1/B2 GPz	81-82
KZ1100D1/D2 Spectre	82-83
KZ1100L1 LTD	1983
ZN1100B1/B2 LTD Shaft	84-85
ZX1100A1/A2 GPz	83-84

Cometic One Piece Base Gasket

Replacement base gasket for 73-81 Kawasaki KZ1/900/1000.
Sold each. **Order No.** 607-200

Cometic Z1-1000 One Piece Head Gasket

Replacement head gasket for Kawasaki Z1-1000 (81-83) and GPz1100 (81-85).
Sold each. **OEM Ref.** C8844-040

Valve Cover Gaskets & Cam End Rubber Plugs

619-009

619-018

Vesrah Valve Cover Gaskets & Cam End Plugs

Sold each. ***Made in Japan.***

Honda Street

Model	Year	Vlv.Cover Gasket	Cam End Rubber Plug
CB400A Automatic	1978	619-007	—
CB400T Hawk	80-81	619-007	—
CB400T1 Hawk	78-79	619-007	—
CB400TII Hawk	78-79	619-007	—
CM400A Automatic	79-81	619-007	—
CM400C Custom	1981	619-007	—
CM400E	80-81	619-007	—
CM400T	79-81	619-007	—
CB450D Super Sport 450	1967	619-035	—
CB450K0	65-68	619-035	—
CB450K1-K7 Super Sport 450	68-74	619-035	—
CB450SC Nighthawk	82-86	619-007	—
CB450T Hawk	1982	619-007	—
CL450/K1-K6 Scrambler 450	67-74	619-035	—
CM450A Automatic	82-83	619-007	—
CM450C Custom	1982	619-007	—
CM450E	82-83	619-007	—
CB500K0/K1/K2 (4cyl.)	71-73	619-006	—
CB500T (twin)	75-76	619-035	—
CX500	78-79	619-004	—
CX500C Custom	79-82	619-004	—
CX500D Deluxe	79-81	619-004	—
FT500 Ascot	82-83	619-005	—
GL500 Silverwing	81-82	619-004	—
GL500I Interstate	81-82	619-004	—
VF500C V30 Magna	84-85	619-016	—
VF500F Interceptor	84-86	619-016	—
VT500C Shadow	83-86	619-015	—
VT500FT Ascot	83-84	619-015	—
XL500S Dual Sport	79-81	619-005	—
CB550F Super Sport	75-77	619-006	—
CB550/K1	74-75	619-006	—
CB550K	76-78	619-006	—
CX650C Custom	1983	619-004	—
CX650T Turbo	1983	619-004	—
GL650 Silverwing	1983	619-004	—
GL650I Silverwing Interstate	1983	619-004	—
CB700SC Nighthawk S	84-86	619-018	—
VF700C Magna	84-85	—	—
VF700F Interceptor	84-85	—	—
VF700S Sabre	84-85	—	—
VFR700F Interceptor	1986	619-041	—
VFR700F2 Interceptor	86-87	619-041	—
CB750A Automatic	76-78	619-003	—
CB750C Custom	80-82	—	—
CB750F Super Sport	75-78	619-003	—
CB750F Super Sport	79-82	—	—
CB750K/K1/K2/K3/K4/K5	69-75	619-003	—
CB750K	76-78	619-003	—
CB750K	79-82	—	—
CB750L LTD	1979	—	—
CB750SC Nighthawk	82-83	—	—
VF750C V45 Magna	82-83	—	—

Honda Street

Model	Year	V.Cover Gasket	Cam End Rubber Plug
VF750C V45 Magna	1988	619-019	—
VF750F V45 Interceptor	83-84	—	—
VF750S V45 Sabre	82-83	—	—
CB900C Custom	80-82	—	—
CB900F Super Sport	81-82	—	—
CB1000C Custom	1983	—	—
CBR1000F Hurricane	87-88	619-043	—
GL1000 Goldwing	75-79	619-001	—
GL1000L Goldwing LTD	1976	619-001	—
VF1000R	85-86	619-019	—
CB1100F Super Sport	1983	—	—
GL1100 Goldwing	80-83	619-001	—
GL1100A Golden Aspencade	82-83	619-001	—
GL1100I Goldwing Interstate	80-83	619-001	—
VF1100C V65 Magna	83-86	619-021	—
VF1100S V65 Sabre	84-85	619-021	—
GL1200 Goldwing	1984	619-038	—
GL1200A Goldwing Aspencade	84-87	619-038	—
GL1200I Goldwing Interstate	84-87	619-038	—
GL1200L Goldwing LTD	1985	619-038	—
GL1200SEi Goldwing SEi	1986	619-038	—
GL1500 Goldwing	88-90	619-048	—

Kawasaki Street

KZ550A1/A2/A3	80-82	619-604	620-991
KZ550A4	1983	619-609	620-991
KZ550C1/C2/C3/C4 LTD	80-83	619-604	620-991
KZ550D1 GPz	1981	619-604	620-991
KZ550F1 Spectre	1983	619-609	620-991
KZ550F2 LTD	1983	619-609	620-991
KZ550H1/H2 GPz	82-83	619-609	620-991
KZ550M1 LTD	1983	619-609	620-991
ZX550A1/A2 GPz	84-85	619-609	620-991
KL600A1/B1/B2 KLR600	84-86	619-617	—
ZL600A1/A2 Eliminator	85-86	619-614	—
ZL600B2/B3 Eliminator 600	96-97	619-614	—
ZX600A1/A2/A3 Ninja 600R	85-87	619-614	—
ZX600B1 Ninja 600RX	1987	619-614	—
ZX600C1-C10 Ninja 600R	88-97	619-614	—
KL650A1-A19 KLR650	87-05	619-617	—
KZ650B1/B2	77-78	619-613	620-991
KZ650B3	1979	619-605	620-991
KZ650C1/C2 Custom	77-78	619-613	620-991
KZ650C3 Custom	1979	619-605	620-991
KZ650D1 SR	1978	619-613	620-991
KZ650D2 SR	1979	619-605	620-991
KZ650E1 LTD	1980	619-605	620-991
KZ650F1	1980	619-605	620-991
KZ650H1/H2 CSR	81-82	619-608	620-991
KZ650H3 CSR	1983	619-610	620-991
KZ700A1	1984	619-610	620-991
ZN700A1/A2 LTD	84-85	619-610	620-991
KZ750B1/B2/B3/B4 (2-cyl.)	76-79	619-602	—
KZ750E1/E2/E3	80-82	619-608	620-991
KZ750F1 LTD Shaft	1983	619-610	620-991
KZ750G1 LTD (2-cyl.)	1980	619-602	—

Valve Cover Gaskets & Cam End Rubber Plugs

Kawasaki Street

Model	Year	V.Cover Gasket	Cam End Rubber Plug
KZ750H1/H2/H3 LTD	80-82	619-608	620-991
KZ750H4 LTD	1983	619-610	620-991
KZ750L3	1983	619-610	620-991
KZ750N1/N2 Spectre	82-83	619-610	620-991
KZ750R1 GPz	1982	619-610	620-991
ZX750A1/A2/A3 GPz	83-85	619-610	620-991
ZX750E1/E2 GPz Turbo	84-85	619-610	620-991
Z1/A/B-900	73-75	619-601	620-990
KZ900A4/A5	76-77	619-601	620-990
KZ900B1 LTD	1976	619-601	620-990
KZ1000A1/A2	77-78	619-601	620-990
KZ1000A3/A3A/A4 MKII	79-80	619-603	620-990
KZ1000B1/B2 LTD	77-78	619-601	620-990
KZ1000B3/B4 LTD	79-80	619-603	620-990
KZ1000C1/C1A Police	1978	619-601	620-990
KZ1000C2-C4 Police	79-81	619-603	620-990
KZ1000D1 Z1R	1978	619-601	620-990
KZ1000D3 Z1R	1980	619-603	620-990
KZ1000E1/E2 Shaft ST	79-80	619-603	620-990
KZ1000G1 LTD Classic	1980	619-603	620-990
KZ1000J1/J2/J3	81-83	619-606	620-992
KZ1000K1/K2 LTD	81-82	619-606	620-992
KZ1000M1/M2 CSR	81-82	619-606	620-992
KZ1000P1-P21 Police	82-02	619-606	620-992
KZ1000R1/R2 Replica	82-83	619-606	620-993
ZX1000B1/B2/B3 Ninja ZX-10	88-90	619-619	———
KZ1100AI/A2/A3 Shaft	81-83	619-606	620-992
KZ1100BI/B2 GPz	81-82	619-606	620-993
KZ1100D1/D2 Spectre	82-83	619-606	620-992
KZ1100L1 LTD Shaft	1983	619-606	620-992
ZN1100BI/B2 LTD	84-85	619-606	620-992
ZX1100AI/A2 GPz	83-84	619-606	620-993
ZG1200A Voyager XII	1986	619-622	———
ZG1200B Voyager XII	87-03	619-622	———
KZ1300A1-A4	79-82	619-607	———
KZ1300B2 Touring	1980	619-607	———
ZN1300A1-A6 Voyager	83-87	619-607	———

Suzuki Street

Model	Year	V.Cover Gasket	Cam End Rubber Plug
GS250TT/TX	80-81	———	620-981
GS300LZ/LD	82-83	———	620-981
GS300LF	1985	———	620-981
GS400B/XB/C/XC	77-78	619-301	620-981
GS425N/EN/LN	1979	619-301	620-981
GS450ET/EX/EZ/ED	80-83	———	620-981
GS450GAZ/GAD Automatic	82-83	———	620-981
GS450GAF Automatic	1985	———	620-981
GS450LT/LX/LZ/LD	80-83	———	620-981
GS450LF/LG/LH/LJ	85-88	———	620-981
GS450ST/SX	80-81	———	620-981
GS450TX/TZ/TXZ/TXD	81-83	———	620-981
GS550B/C/EC/N/EN/ET	77-80	619-304	620-981
GS550LN/LT/LX/LZ	79-82	619-304	620-981
GS550MZ	1982	———	620-981
GS550TX	1981	619-304	620-981
GSX600FJ-FK5 Katana	88-05	619-328	———
GR650D/XD Tempter	1983	619-327	———
GS650EX/EZ	81-82	———	620-981
GR650D/XD Tempter	1983	619-327	———
GS650EX/EZ	81-82	———	620-981
GS650GX	1981	———	620-981
GS650GZ/GD	82-83	———	620-981
GS650GLX/GLZ	81-82	———	620-981
GS650GLD	1983	———	620-981
GS650MD Katana	1983	———	620-981
XN85 Turbo	1983	———	620-981

Suzuki Street

Model	Year	V.Cover Gasket	Cam End Rubber Plug
GS700EF/ESF	1985	619-326	———
GS750B/C/EC/N/EN	77-79	619-302	620-981
GS750ET/EX	80-81	619-305	620-981
GS750EZ	1982	619-307	620-981
GS750ED/ESD	1983	619-326	———
GS750LN	1979	619-302	620-981
GS750LT/LX	80-81	619-305	620-981
GS750SD Katana	1983	619-320	620-981
GS750TZ/TD	82-83	619-307	620-981
GSX-R750RG	1986	619-328	———
GSX-R750G/H	86-87	619-328	———
GSX-R750J/K	88-89	619-329	———
GS850GN/GT/GX	79-81	619-302	620-981
GS850GZ/GD	82-83	———	620-981
GS850GLT/GLX	80-81	619-302	620-981
GS850GLZ/GLD	82-83	———	620-981
GS1000C/EC/N/EN/ET	78-80	619-303	620-981
GS1000GT/GLT/GX/GLX	80-81	619-303	620-981
GS1000LN	1979	619-303	620-981
GS1000SN/ST	79-80	619-303	620-981
GS1000SZ Katana	1982	619-305	620-981
GS1100ET/EX	80-81	619-305	620-981
GS1100EZ	1982	619-307	620-981
GS1100ED/ESD	82-83	619-320	620-981
GS1100GZ/GLZ/GD/GLD	82-83	619-306	620-981
GS1100GKZ/GK2/GKD/GKE	82-84	619-306	620-981
GS1100LT	1980	619-305	620-981
GSX1100FJ-FP Katana	88-93	619-329	———
GSX-R1100G/H/J	86-88	619-329	———

Yamaha Street

Model	Year	V.Cover Gasket	Cam End Rubber Plug
SRX250T/TC	1987	619-209	———
FZR400U/SUC-A/SAC	88-90	619-215	———
XS400J/K Maxim	82-83	619-205	620-998
XS400RJ/RK Seca	82-83	619-205	620-998
XJ550H/J/K Maxim	81-83	619-206	———
XJ550RH/RJ/RK Seca	81-83	619-206	———
FJ600L/LC/N/NC	84-85	619-206	———
FZ600S/SC/T/TC/U/UC	86-88	619-206	———
YX600S/SC-A/AC Radian	86-90	619-206	———
XJ650G/H Maxim	80-81	619-202	620-998
XJ650J/K Maxim	82-83	619-213	———
XJ650LH Midnight Maxim	1981	619-202	620-998
XJ650LH Midnight Maxim	1981	619-202	620-998
XJ650LJ/LK Seca Turbo	82-83	———	620-998
XJ650RJ Seca	1982	619-202	620-998
FZ700T/TC	1987	619-211	———
XJ700N/NC/S/SC Maxim	85-86	619-213	———
XJ700X Maxim X	85-86	619-211	———
FZ750N/S/SC	85-86	619-211	———
FZ750U/UC	1988	619-211	———
FZR750RT/RU	87-88	619-211	———
XJ750J/K/MK Maxim & Midnight	82-83	619-213	———
XJ750RH/RJ/RK Seca	82-83	619-213	———
XS750D/2D/E/F	77-79	619-201	620-998
XS750SE/SF Special	78-79	619-201	620-998
XS850G/H	80-81	619-201	620-998
XS850LG/LH Midnight Special	80-81	619-201	620-998
XS850SG/SH Special	80-81	619-201	620-998
FZR1000T/TC/U/UC	87-88	619-211	———
FJ1100L/LC/N/NC	84-85	619-210	———
XJ1100J Maxim	1982	619-203	620-998
XS1100E/F/G/H	78-81	619-203	620-998
XS1100LG/LH Midnight Special	80-81	619-203	620-998
XS1100SF/SG/SH Special	79-81	619-203	620-998
FJ1200S/SC/T/TC /W/WC/A/AC	86-90	619-210	———

Camshaft, Cam End Rubber Plugs, & Piston Kit

Camshaft End Rubber Plugs

Replacement camshaft end rubber plugs. Sold in 4 pc. sets. Made in Japan.

620-990

620-998

Kawasaki

OEM Ref. 92066-017 **Order No.** 620-990

Model	Year
Z1/A/B-900	73-75
KZ900A4/A5	76-77
KZ900B1 LTD	1976
KZ1000A1/A2	77-78
KZ1000A3/A4 MKII	79-80
KZ1000B1/B2/B3/B4 LTD	77-78
KZ1000C1/C1A/C2/C3/C4	78-81
KZ1000D1 Z1R	1978
KZ1000D3 Z1R	1980
KZ1000E1/E2 Shaft ST	79-80
KZ1000G1 LTD Classic	1980

Note: See page 31 for Billet Cam End Plugs.

OEM Ref. 92066-1111 **Order No.** 620-991

KZ550A1/A2/A3/A4	80-83
KZ550C1/C2/C3/C4 LTD	80-83
KZ550D1 GPz	1981
KZ550F1 Spectre	1983
KZ550F2 LTD	1983
KZ550H1/H2 GPz	82-83
KZ550M1 LTD	1983
ZX550A1/A2 GPz	84-85
KZ650B1/B2/B2A/B3	77-79
KZ650C1/C2/C3 Custom	77-78
KZ650D1/D2 SR	78-79
KZ650E1/F1	1980
KZ650H1/H2/H3 CSR	81-83
KZ700A1	1984
ZN700A1/A2 LTD	84-85
KZ750E1/E2/E3	80-82
KZ750F1 LTD Shaft	1983
KZ750H1/H2/H3/H4 LTD	80-83
KZ750L3	1983
KZ750N1/N2 Spectre	82-83
KZ750R1 GPz	1982
ZX750A1/A2/A3 GPz	83-85
ZX750E1/E2 GPz Turbo	84-85

OEM Ref. 92066-1106 **Order No.** 620-992

Use with cylinder head not black or as an option for models listed under 620-993

Model	Year
KZ1000J1/J2/J3	81-83
KZ1000K1/K2 LTD	81-82
KZ1000M1/M2 CSR	81-82
KZ1000P1-P19 Police	82-00
KZ1100AI/A2/A3 Shaft	81-83
KZ1100D1/D2 Spectre	82-83
KZ1100L1 LTD Shaft	1983
ZN1100BI/B2 LTD	84-85

OEM Ref. 92066-1104 **Order No.** 620-993

Use with black cylinder head or as an option for models listed

KZ1000J1/J2/J3	81-83
KZ1000R1/R2 Replica	82-83
KZ1100BI/B2 GPz	81-82
ZX1100AI/A2 GPz	83-84

Suzuki

OEM Ref. 09241-23002 **Order No.** 620-981

GS250TT/TX	80-81
GS300LZ/LD	82-83
GS300LF	1985
GS400B/XB/C/XC	77-78
GS425N/EN/LN	1979
GS450ET/EX/EZ/ED	80-83
GS450GA Automatic	82-83
GS450GAF Automatic	1985
GS450LT/LX/LZ/LD	80-83
GS450LF/LG/LH/LJ	85-88
GS450ST/SX	80-81
GS450TX/TZ/TXZ/TXD	81-83
GS550B/C/EC/N/EN	77-79
GS550ET	1980
GS550LN/LT/LX/LZ	79-82
GS550MZ	1982
GS550TX	1981
GS650EX/EZ	81-82
GS650GX/GZ/GD	81-83
GS650GLX/GLZ/GLD	81-83
GS650MD Katana	1983
GS750B/C/EC/N/EN	77-79
GS750ET/EX/EZ	80-82
GS750LN/LT/LX	79-81
GS750SD Katana	1983
GS750TZ/TD	82-83
XN85D Turbo	1983

OEM Ref. 09241-23002 **Order No.** 620-981

GS850GN/GT/GX/GZ/GD	79-83
GS850GLT/GLX/GLZ/GLD	80-83
GS1000C/EC/N	78-79
GS1000EN/ET	79-80
GS1000GT/GLT/GX/GLX	80-81
GS1000LN	1979
GS1000SN/ST	79-80
GS1000SZ Katana	1982
GS1100ET/EX	80-81
GS1100EZ/ED/ESD	82-83
GS1100GZ/GLZ/GD/GLD	82-83
GS1100GKZ/GK2/GKD/GKE	82-84
GS1100LT	1980
GS1100SD Katana	1983

Yamaha

OEM Ref. 1J7-11138-00-00 **Order No.** 620-998

XS400J/K Maxim	82-83
XS400RJ/RK Seca	82-83
XJ650G/H Maxim	80-81
XJ650LH Midnight	1981
XJ650LJ/LK Seca Turbo	82-83
XJ650RJ Seca	1982
XS750D/E/F	77-79
XS750SE/SF Special	78-79
XS850G/H	80-81
XS850LG/LH Special	80-81
XS850SG/SH Special	80-81
XJ1100J Maxim	1982
XS1100E/F/G/H	78-81
XS1100LG/LH	80-81
XS1100SF/SG/SH	79-81

WebCam Camshafts

Honda

Honda Camshaft - Stage 1

Ref. 55-402 **Order No.** 888-005

Model	Year
CB750F	75-76
CB750F2	77-78
CB750K	69-78

Honda Camshaft - Stage 2

Ref. 55-412 **Order No.** 888-006

CB750F	75-76
CB750K	69-78

Kawasaki

Kawasaki Camshaft - Stage 1

Ref. 536/297 **Order No.** 888-100

Model	Year
KZ1000	73-84
KZ1100	73-84
KZ900	73-84

Kawasaki Camshaft - Stage 2

Ref. 539/540 **Order No.** 888-101

Model	Year
KZ1000	73-84
KZ1100	73-84
KZ900	73-84

625-602

625-160

JE Racing Piston Kits

Piston kits include pistons, rings, pins, and clips. Sold in a case of 4.

Kawasaki

Model	Disp.	Size	Order No.	Head Gasket No.
KZ900/1000	1075cc	72mm	625-602	607-111

Honda

Model	Disp.	Year	Size	Order No.
CB750	836cc	69-78	65mm	625-160

Valve Cover Rubber Parts

Rubber O-Ring Camshaft Holder

Honda applications. Sold each. ***Made in Japan.***

Honda

OEM Reference 91311-425-000	Order No. 620-700
Model	**Year**
CB750C Custom	80-82
CB750F Super Sport	79-82
CB750K	79-82
CB750L LTD	1979
CB750SC Nighthawk	82-83
CB900C Custom	80-82
CB900F Super Sport	81-82
CB1000C Custom	1983
CB1100F Super Sport	1983

Sealing Rubber

Honda applications. Sold pk/6. ***Made in Japan.***

Honda

OEM Reference 91318-300-013	Order No. 620-710
Model	**Year**
CB500K0/K1/K2	71-73
CB550F Super Sport	75-77
CB550K0/K1	74-75
CB550K	76-78
CB650	79-82
CB650C Custom	80-81
CB650SC Nighthawk 650	1982
CB750A Automatic	76-78
CB750F Super Sport	75-78
CB750K0/K1/K2/K3/K4/K5	69-75
CB750K	76-78

Cam Cover End Plugs NEW

Billet aluminum machined cam cover plugs with satin finish. Will not blow out or suck as the stock rubber plugs. Fits Kawasaki Z1/KZ900 and KZ1000 models shown. Sold in set of 4.

Order No: 620-9990

Kawasaki

Model	Year
Z1/Z1A/ZIB-900	73-75
KZ900A4/A5	76-77
KZ900B1 LTD	1976
KZ1000A1/A2	77-78
KZ1000A3/A3A/A4 MKII	79-80
KZ1000B1/B2/B3/B4 LTD	77-80
KZ1000C1/C1A/C2/C3/C4 Police	78-81
KZ1000D1 Z1R	1978
KZ1000D3 Z1R	1980
KZ1000E1/E2 Shaft St	79-80
KZ1000G1 LTD Classic	1980

Motion Pro Tappet Tool Set

Set contains three socket wrenches in 8mm, 9mm, 10mm and three adjusters, screw type, 3mm square and 4mm square. Fits nearly all models of Honda, Suzuki, and Yamaha Motorcycles and ATV's with screw-type adjusters.

Order No. 950-440

621-904

621-902

621-903

620-985

621-900

Valve (Head) Cover Bolt Seals

Replacement bolt seal for valve cover bolts. Sold in 4 pc., 6 pc. and 10 pc. sets. See Page 306-308 for applications. ***Made in Japan.***

13mm Valve Adjustment Shim Kits

Sold as dealer kit and in individual sizes. Individual sizes sold each. See model application list on next column.

Kawasaki 13mm Diameter

13mm Diameter Dealer Shim Kit 2.30mm - 3.10mm

Order No. **035-025**

Includes storage box and qt 2 each size of the following:
2.30, 2.40, 2.50, 2.55, 2.60, 2.65, 2.70, 2.75, 2.80, 2.85, 2.90, 2.95, 3.00, 3.10

Valve Shim Storage Box **Order No. 008-001**

13mm Valve Adjustment Shims

Sizes available from 2.30mm - 3.10mm thickness. Sold each.

Size	Order No.	Size	Order No.
2.30mm	035-619	2.75mm	035-628
2.40mm	035-621	2.80mm	035-629
2.50mm	035-623	2.85mm	035-630
2.55mm	035-624	2.90mm	035-631
2.60mm	035-625	2.95mm	035-632
2.65mm	035-626	3.00mm	035-633
2.70mm	035-627	3.10mm	035-635

Kawasaki Street

Model	Year
KZ550A1/A2/A3	80-82
KZ550A4	1983
KZ550C1-C4 LTD	80-83
KZ550D1 GPz	1981
KZ550F1/F2 Spectre & LTD	83-84
KZ550H1/J2 GPz	82-83
1983KZ550M LTD	1983
ZR550B1/B2/B3/B4 Zephyr	90-93
ZX550A1/A2/A3 GPz	84-86
KZ650B1/B2/B2A	77-78
KZ650B3	1979
KZ650C1/C2 Custom	77-78
KZ650C3 Custom	1979
KZ650D1/D1A SR	1978
KZ650D2 SR	1979
KZ650E1 LTD	1980
KZ650F1	1980
KZ650H1/H2 CSR	81-82
KZ650H3	1983
KZ700A1	1984
ZN700A1/A2 LTD	84-85
KZ750E1/E2/E3	80-82
KZ750F1 LTD	1983
KZ750H1/H2/H3 LTD	80-82
KZ750H4	1983
KZ750L3	1983
KZ750N1/N2 Spectre	82-83
KZ750R1 GPz	1982
ZR750C1/C2/C3 Zephyr	91-93
ZR750F2 ZR-7	2000
ZR750H1/H2/H3 ZR-7S	01-03
ZX750A1/A2/A3 GPz	83-85
ZX750E1/E2 GPz Turbo	84-85
ZR1100A1/A2/A3/A4	92-95
ZR1100C/3C4 ZRX1100	99-00
ZX1100A1/A2 GPz	83-84

Valve Shims

25mm Valve Adjustment Shim Kits

Sold as dealer kit and in individual sizes. Individual sizes sold each.
See model application list on next column.

Honda/Triumph/Yamaha 25mm Diameter
25mm Diameter Dealer Shim Kit 2.30mm - 2.70mm
Order No. 035-010
Includes storage box and qt 2 each size of the following:
2.30, 2.35, 2.40, 2.45, 2.50, 2.55, 2.60, 2.65, 2.70

25mm Diameter Dealer Shim Kit 2.75mm - 3.10mm
Order No. 035-011
Includes storage box and qt 2 each size of the following:
2.75, 2.280, 2.85, 2.90, 2.95, 3.00, 3.05, 3.10

Valve Shim Storage Box **Order No. 008-001**

25mm Valve Adjustment Shims

Sizes available from 2.30mm - 3.20mm thickness. Sold each.

Size	Order No.	Size	Order No.
2.30mm	035-319	2.75mm	035-328
2.35mm	035-320	2.80mm	035-329
2.40mm	035-321	2.85mm	035-330
2.45mm	035-322	2.90mm	035-331
2.50mm	035-323	2.95mm	035-332
2.55mm	035-324	3.00mm	035-333
2.60mm	035-325	3.05mm	035-334
2.65mm	035-326	3.10mm	035-335
2.70mm	035-327	3.20mm	035-337

950-435

950-436

Motion Pro Valve Shim Tools

Manufactured from hardened alloy steel. Compresses valve shim bucket for removal of valve adjustment shim.

Valve Shim Tool for Honda DOHC **Order No. 950-436**
CB750C/F/K/L/SC 80-83, CB900C/F 80-82
CB1000C 1983, CB1100F 1983, CBX1047cc 79-82
Use on Honda applications listed on next column

Valve Shim Tool for Yamaha XJ600 only **Order No. 950-435**
XJ600 Seca II (92-98)
Use with XJ600 application only

Honda Street

Model	Year
CB750C Custom	80-82
CB750F Super Sport	79-82
CB750K	79-82
CB750L LTD	1979
CB750SC Nighthawk	82-83
CB900C Custom	80-82
CB900F Super Sport	81-82
CB1000C Custom	1983
CB1100F Super Sport	1983
CBX1047cc	79-82

Triumph

All water-cooled three & four cylinder models

Yamaha Street

SRX250T/TC	1987
XJ600SD/SDC-SK/SKC Seca II	92-98
XVZ12TK/TDK Venture & Venture Royale	1983
XVZ12DL/DKC2/DN Venture Royale	84-85
XVZ13DS/DT Venture Royale	86-87
XVZ13DSC/DTC Venture Royale	86-87
XVZ12T/TC/U/UC Venture	87-88
XVZ13DU/DUC/DW/DWC Venture Royale	88-89
XVZ13DA/DAC/DB/DBC Venture Royale	90-91
XVZ13DD/DDC/DE/DEC Venture Royale	92-93
VMX12N/NC/S/SC V-Max	85-86
VMX12U/UC/W/WC/A/AC/B/BC/D/DC/E/EC V-Max	88-93
VMX12F/FC/G/GC/H/HC/J/JC/K/KC/L/LC V-Max	94-99
VMX12M/MC/N/NC/P/PC/R/S1/S1C/T/TC/V/VC V-Max	00-06
FJ1100L/LC/N/NC	84-85
FJ1200S/SC/T/TC	86-87
FJ1200W/WC/A/AC/B/BC/D/DC	89-92
FJ1200AD/ADC/AE/AEC (ABS)	92-93
XVZ1300AH/AHC/AJ/AJC/AK/AKC Royal Star	96-98
XVZ1300AL/ALC/AM/AMC Royal Star Boulevard	99-00
XVZ1300AN/ANC Royal Star Boulevard	2001
XVZ1300ATH/ATHC/ATJ/ATJC Royal Star Tour Classic	96-97
XVZ1300ATK/ATKC/ATL/ATLC Royal Star Tour Classic	98-99
XVZ1300ATM/ATMC Royal Star Tour Classic	2000
XVZ1300LTJ/LTJC/LTK/LTKC Royal Star Tour Deluxe	97-98
XVZ1300LTL/LTLC/LTM/LTMC Royal Star Tour Deluxe	99-00
XVZ1300LTN/LTNC Royal Star Tour Deluxe	2001
XVZ1300CTT/CTC Royal Star Tour Deluxe	2005
XVZ1300TFSMC Royal Star Venture MM	2000
XVZ1300TFL/TFLC/TFM/TFMC Royal Star Venture	99-00
XVZ1300TFN/TFNC/TFP/TFPC Royal Star Venture	01-02
XVZ1300TFR/TFRC/TFS/TFSC Royal Star Venture	03-04
XVZ1300TFT/TFTC Royal Star Venture	2005
XVZ1300TFSP/TFSPC Royal Star Midnight Venture	2002
XVZ1300TFSR/TFSRC Royal Star Midnight Venture	2003
XVZ1300TFMS/TFMSC Royal Star Midnight Venture	2004
XVZ1300TFMT/TFMTC Royal Star Midnight Venture	2005

Yamaha Dual Sport & Offroad

XT250L/LC Dual Sport	1984
TT350S/T Offroad	86-87
XT350N/NC-M/MC Dual Sport	85-00

29mm Valve Adjustment Shim Kits

Sold as dealer kit and in individual sizes. Individual sizes sold each. See model application list on next column.

Kawasaki/Yamaha 29mm Diameter

Dealer Shim Kit 2.00mm - 2.50mm (total 22 shims)
Order No. 035-015
Includes storage box and qt 2 each size of the following:
2.00, 2.05, 2.10, 2.15, 2.20, 2.25, 2.30, 2.35, 2.40, 2.45, 2.50

Dealer Shim Kit 2.55mm - 3.10mm (total 24 shims)
Order No. 035-016
Includes storage box and qt 2 each size of the following:
2.55, 2.60, 2.65, 2.70, 2.75, 2.80, 2.85, 2.90, 2.95, 3.00, 3.05, 3.10

Valve Shim Storage Box **Order No. 008-001**

29mm Valve Adjustment Shims

Sold each. Sizes available from 2.00mm - 3.10mm thickness.

Size	Order No.	Size	Order No.
2.00 mm	035-413	2.55mm	035-424
2.05mm	035-414	2.60mm	035-425
2.10mm	035-415	2.65mm	035-426
2.15mm	035-416	2.70mm	035-427
2.20mm	035-417	2.75mm	035-428
2.25mm	035-418	2.80mm	035-429
2.30mm	035-419	2.85mm	035-430
2.35mm	035-420	2.90mm	035-431
2.40mm	035-421	2.95mm	035-432
2.45mm	035-422	3.00mm	035-433
2.50mm	035-423	3.05mm	035-434
		3.10mm	035-435

950-437

950-438

Motion Pro Valve Shim Tools

Manufactured from hardened alloy steel. Compresses valve shim bucket for removal of valve adjustment shim.

Valve Shim Tool for Kawasaki **Order No. 950-437**
Z1/A/B-900/KZ900/KZ1000/KZ1100/KZ1300/ZN1300
Use on Kawasaki applications listed on next column

Valve Shim Tool for Yamaha **Order No. 950-438**
XJ550/XJ650/XJ750/XS750/XS850/XS1100
Use on all Yamaha applications listed on next column

Kawasaki Street

Model	Year
Z1/A/B-900	73-75
KZ900A4/A5	76-77
KZ900B1 LTD	1976
KZ1000A1/A2	77-78
KZ1000A3/A3A/A4 MKII	79-80
KZ1000B1/B2/B3/B4 LTD	77-80
KZ1000C1/C1A/C2/C3/C4 Police	78-81
KZ1000D1 Z1R	1978
KZ1000D3 Z1R	1980
KZ1000E1/E2 Shaft ST	79-80
KZ1000G1 LTD Classic	1980
KZ1000J1/J2/J3	81-83
KZ1000K1/K2 LTD	81-82
KZ1000M1/M2 CSR	81-82
KZ1000P1-P21 Police	82-02
KZ1000P24 Police	2005
KZ1000R1/R2 Replica	82-83
KZ1100A1/A2/A3 Shaft	81-83
KZ1100B1/B2 GPz	81-82
KZ1100D1/D2 Spectre	82-83
KZ1100L1 LTD	1983
ZN1100B1/B2 LTD	84-85
KZ1300A1/A2/A3/A4	79-82
KZ1300B2 Touring	1980
ZN1300A1-A6 Voyager	83-87

Kawasaki Dual Sport & Offroad

KL600A1/B1/B2 KLR600	84-86
KL650A1-A19 KLR650	87-05
KL650A6F/A7F KLR650	2006
KL650B2/B3 Tengai KLR650	90-91
KLX650A1/A2/A3/D1 Offroad	93-96
KLX650C1/C2/C3/C4 Dual Sport	93-96

Yamaha Street

XS400J/K Maxim	82-83
XS400RJ/RK Seca	82-83
XJ550H/J/K Maxim	81-83
XJ550RH/RJ/RK Seca	81-83
FJ600L/LC/N/NC	84-85
FZ600S/SC/T/TC/U/UC	86-88
YX600S/SC-A/AC Radian	86-90
XJ650G/H/J/K Maxim	80-83
XJ650LH Midnight Maxim	1981
XJ650RJ Seca	1982
XJ650LJ/LK Seca Turbo	82-83
XJ700N/NC/S/SC Maxim	85-86
XJ750J/K Maxim	82-83
XJ750MK Midnight Maxim	1983
XJ750RH/RJ/RK Seca	81-83
XS750D/2D/E/F	77-79
XS750SE/SF Special	78-79
XS850G/H	80-81
XS850LG/LG Midnight Special	80-81
XS850SG/SH Special	80-81
XJ900RK Seca	1982
XJ1100J Maxim	1982
XS1100E/F/G/H	78-81
XS1100LG/LH Midnight Special	80-81
XS1100SF/SG/SH Special	79-81

Valve Shims

29.5mm Valve Adjustment Shim Kit

Sold as dealer kit and in individual sizes. Individual sizes sold each.
See model application list on next column.

Suzuki 29.5mm Diameter

Dealer Shim Kit 2.30mm - 3.00mm

Order No. **035-020**

Includes storage box and qt 2 each size of the following:
2.30, 2.35, 2.40, 2.45, 2.50, 2.55, 2.60, 2.65, 2.70, 2.75, 2.80
2.85, 2.90, 3.00.

Valve Shim Storage Box — Order No. **008-001**

29.5mm Valve Adjustment Shims

Sold each. Sizes available from 2.30mm - 3.00mm thickness.

Size	Order No.	Size	Order No.
2.30mm	035-519	2.65mm	035-526
2.35mm	035-520	2.70mm	035-527
2.40mm	035-521	2.75mm	035-528
2.45mm	035-522	2.80mm	035-529
2.50mm	035-523	2.85mm	035-530
2.55mm	035-524	2.90mm	035-531
2.60mm	035-525	3.00mm	035-533

Z1 Tach Cable Guide Kit

Kit includes tach cable gear holder, o-rings and tach oil seal.
Made in Japan.

Order No: **900-173**

Kawasaki

Model	Year
Z1/ A/ B-900	73-75
KZ900A4 up to engine 135980	76-77
KZ900B1 LTD up to engine 135980	1976

Suzuki

Model	Year
GS400B/XB/C/XC	80-82
GS425EN/LN/N	1983
GS450ET/EX/EZ/ED	80-83
GS450GAZ/GAD	82-83
GS450GAF	1985
GS450LT/LX/LZ/LD	80-83
GS450LF/LG/LH/LJ	85-88
GS450ST/SX	80-81
GS450TX/TXZ/TZ/TXD	84-86
GS500EK/EL/EM/EN/EP/ER/ES/ET/EV/EW/EX/EY	89-00
GS500EK1/EK2	01-02
GS500FK4/FK5/FK6/FK7/FK8/FK9	04-09
GS500HK7/HK8/HK9	07-09
GS550B/C/EC/N/EN/ET	77-80
GS550MZ Katana	1982
GS550TT/TX	80-81
GR650D/XD Tempter	1983
GS650EX/EZ	81-82
GS650GX/GZ/GD	81-83
GS650GLX/GLZ/GLD	81-83
GS650MD Katana	1983
XN85 Turbo	1983
GS750B/C/N/EN/EN	77-79
GS750ET/EX/EZ	80-82
GS750ED/ESD	1983
GS750SD Katana	82-83
GS750TZ/TD	82-83
GS850GN/GT//GX/GZ	80-82
GS850GLT/GLX/GLZ	81-83
GS1000C/EC/N/EN/ET	78-80
GS1000GT/GLT/GX/GLX	80-81
GS1000LN	1979
GS1000SN/ST	79-80
GS1000SZ Katana	1982
GS1100ED/ESD	1983
GS1100ET/EX/EZ	80-82
GS1100GZ/GLZ/GX/GLX	82-83
GS1100GKZ/GK2/GKD/GKE	82-84
GS1100SD Katana	1983

Z1 Tachometer Cable

Tachometer cable for the above applications. Sold each.

Order No. **653-601**

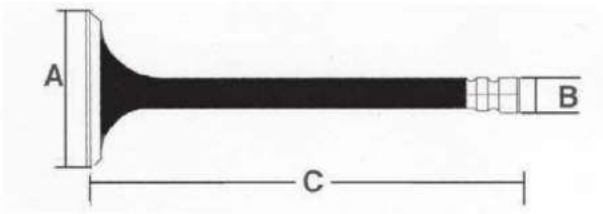

Vesrah Engine Valves

Sudco offers high performance engine valves manufactured in Japan to the highest quality standards by Fuji. All valves feature advanced technology, stainless steel construction, and tuff tride treatment for a superior product, with high resistance to wear, burn oxidation and corrosion. Made in Japan. Valves are sold each.
Order per quantity required.

Honda Street

Model	Year	Intake No.	Exhaust No.
CB125S	76-85	622-1014I	622-1014E
CB750A Automatic	76-77	622-1002I	622-1002E
CB750C Custom	80-82	622-1003I	622-1003E
CB750F Super Sport	75-76	622-1002I	622-1002E
CB750F Super Sport	79-82	622-1003I	622-1003E
CB750K D-K5/K	69-77	622-1002I	622-1002E
CB750K	79-82	622-1003I	622-1003E
CB750L LTD	1979	622-1003I	622-1003E
CB750SC Nighthawk	82-83	622-1003I	622-1003E
VF750C V45 Magna	82-83	622-030I	622-030E
VF750S V45 Sabre	82-83	622-030I	622-030E
CB900C Custom	80-82	622-1006I	622-1006E
CB900F Super Sport	81-82	622-1006I	622-1006E
CB1000C Custom	1983	622-1006I	622-1006E
CBX	79-82	622-1003I	622-1003E
CB1100F Super Sport	1983	622-1006I	622-1006E

Honda Dual Sport & Offroad

XL125S	79-82	622-1014I	622-1014E
XL125S	1984	622-1014I	622-1014E
XL185S	79-83	622-1014I	622-1014E
XR185	1979	622-1014I	622-1014E
XL200R	83-84	622-1014I	622-1014E
XR200	80-84	622-1014I	622-1014E
XR200R	81-83	622-1014I	622-1014E
XR200R	86-88	622-1014I	622-1014E

Kawasaki Street

KZ200A1/A2	78-79	622-4012I	622-4012E
KL250A1/A1A/A2	78-79	622-610I	622-610E
KL250A3/A4	80-81	622-4011I	622-4011E
KL250C1/C2	83-84	622-4011I	622-4011E
KL250D2-D22 KLR250	85-05	622-4018I	622-4018E
KZ250D1 LTD	1980	622-4011I	622-4011E
KZ250D2 CSR	1981	622-4011I	622-4011E
KZ250L1 CSR	1982	622-4011I	622-4011E
KZ250W1 LTD	1983	622-4011I	622-4011E
EX305B1 GPz	1983	622-4020I	622-4020E
KZ400B1/B2	78-79	622-604I	622-604E
KZ400H1 LTD	1979	622-604I	622-604E
EN450A LTD454	85-90	622-4018I	622-4018E

Kawasaki Street

Model	Year	Intake No.	Exhaust No.
EX500A1-A7 Ninja 500R	87-93	622-4018I	622-4018E
KZ550A1/A2/A3	80 82	—	—
KZ550C1/C2/C3/C4 LTD	80-83	—	—
KZ550D1 GPz	1981	—	—
KZ550F1 Spectre	1983	—	—
KZ550F2 LTD	1984	—	—
KZ550H1/H2 GPz	82-83	—	—
KZ550M1 LTD	1983	—	—
ZX550A1/A2 GPz	84-85	—	—
KL600A1 KLR600 Dual Sport	1984	622-615I	—
KL600B1/B2 KLR600 Dual Sport	85-86	622-615I	—
ZL600A1/A2 Eliminator	85-86	622-4023I	622-4023E
ZX600A1/A2/A3 Ninja 600R	85-87	622-4023I	622-4023E
ZX600B1 Ninja 600RX	1987	622-4023I	622-4023E
ZX600C1-C10 Ninja 600R	88-97	622-4023I	622-4023E
KL650A1-A19 KLR650	87-05	622-4015I	—
KZ650B1/B2/B2A/B3	77-79	622-4008I	—
KZ650C1/C2/C3	77-79	622-4008I	—
KZ650C1/C2/C3	77-79	622-4008I	—
KZ6501/D1A/D2 SR	78-79	622-4008I	—
KZ650E1 LTD	1980	622-4008I	—
KZ650F1	1980	622-4008I	—
VN750A2-A21 Vulcan 750	86-05	622-4017I	622-4017E
ZI/A/B-900	73-75	622-4001I	622-4001E
KZ900A4/A5	76-77	622-4001I	622-4001E
KZ900B1 LTD	1976	622-4001I	622-4001E
ZL900A1/A2 Eliminator	85-86	622-4018I	622-4018E
ZX900A1/A2/A3 Ninja 900R	84-86	622-4018I	622-4018E
KZ1000A1/A2	77-78	622-4003I	622-4003E
KZ1000A3/A3A/A4 MKII	79-80	622-4003I	622-4003E
KZ1000B1/B2/B3/B4 LTD	77-80	622-4003I	622-4003E
KZ1000C1-C4 Police	78-81	622-4003I	622-4003E
KZ1000D1 Z1R	1978	622-4003I	622-4003E
KZ1000D3 Z1R	1980	622-4003I	622-4003E
KZ1000E1/E2 Shaft ST	79-80	622-4003I	622-4003E
KZ1000G1 LTD Classic	1980	622-4003I	622-4003E
KZ1000JI/J2/J3	81-83	622-4005I	622-4005E
KZ1000K1/K2 LTD	81-82	622-4005I	622-4005E
KZ1000M1/M2 CSR	81-82	622-4005I	622-4005E
KZ1000P1-P22 /Police	82-03	622-4005I	622-4005E
KZ1000RI/R2 Replica	82-83	622-4005I	622-4005E
ZG1000A1-A20 Concours	86-05	622-4018I	622-4018E
ZL1000A1 Eliminator	1987	622-4018I	622-4018E
ZX1000A1/A2 Ninja 1000R	86-87	622-4018I	622-4018E
KZ1100A1/A2/A3 Shaft	81-83	622-4005I	622-4005E
KZ1100B1/B2 GPz	81-82	622-4005I	622-4005E
KZ1100D1/D2 Spectre	82-83	622-4005I	622-4005E
KZ1100L1 LTD Shaft	1983	622-4005I	622-4005E
ZN1100B1/B2 LTD	84-85	622-4015I	622-4015E
ZX1100AI/A2 GPz	83-84	622-4015I	622-4015E
VN1500A1-A9 Vulcan 88	87-90	622-4024I	622-4024E
VN1500B1/B2/B3/B4 Vulcan 88 SE	87-90	622-4024I	622-4024E

Engine Valves

Kawasaki Dual Sport & Offroad

Model	Year	Intake No.	Exhaust No.
KL250A1/A1A/A2	78-79	622-610I	622-610E
KL250A3/A4	80-81	622-4011I	622-4011E
KL250C1/C2	83-84	622-4011I	622-4011E
KL250D2-D22 KLR250	85-05	622-4018I	622-4018E
KL600A1 KLR600	1984	622-615I	———
KL600B1/B2 KLR600	85-86	622-615I	———
KL650A1-A19 KLR650	87-05	622-4015I	———

Suzuki Street

SP100D Dual Sport	1983	———	———
GN125Z/D	82-83	———	622-3012E
SP125Z/D Dual Sport	82-83	———	———
GN250Z/D	82-83	———	———
GN250F	1985	———	———
GN250J	1988	———	———
SP250Z/D Dual Sport	82-83	———	622-406E
SP250F Dual Sport	1985	———	622-406E
GS550B/C/EC/N/EN	77-79	———	622-433E
GS550ET	1980	———	622-433E
GS550LN/LT/LX/LZ	79-82	———	622-433E
GS550MZ Katana	1982	———	622-433E
GS550TX	1981	———	622-433E
GSX600FJ/FK/FL/FM Katana	88-91	622-3023I	622-3023E
GSX600FW/FX/FY/FK1-FK5 Katana	88-05	622-3023I	622-3023E
GS650EX/EZ	81-82	———	622-433E
GS650GX/GZ/GD	81-83	———	622-433E
GS650GLX/GLZ/GLD	81-83	———	622-433E
GS650MD Katana	1983	———	622-433E
XN85D Turbo	1983	———	622-433E
GS750ET/EX/EZ	80-82	622-3001I	622-3001E
GS750LT/LX	80-81	622-3001I	622-3001E
GS750TZ/TD	82-83	622-3001I	622-3001E
GSX-R750G/H	86-87	622-3019I	622-3019E
GSX-R750RG	1986	622-3019I	622-3019E
GSX-R750J/K	88-89	622-3022I	622-3022E
GS1000C/EC/N/EN/ET	78-80	622-3007I	622-3007E
GS1000GT/GLT/GX/GLX	81-82	622-3007I	622-3007E
GS1000LN	1979	622-3007I	622-3007E
GS1000SN/ST	79-80	622-3007I	622-3007E
GS1000SZ Katana	1982	622-3008I	622-3008E
GS1100ET/EX/EZ/ED/ESD	80-83	622-3008I	622-3008E
GS1100GZ/GLZ/GD/GLD	82-83	622-3007I	622-3007E
GS1100GKZ/GK2/GKD/GKE	82-84	622-3007I	622-3007E
GS1100LT	1980	622-3008I	622-3008E
GS1100SD Katana	1983	622-3008I	622-3008E
GSX1100FJ-FP Katana	88-93	622-3018I	622-3018E
GSX-R1100G/H/J/K/L	86-90	622-3018I	622-3018E

Suzuki Dual Sport & Offroad

DR100D/E	83-84	———	———
SP100D Dual Sport	1983	———	———
DR125Z/D/E	82-84	———	———
SP125Z/D Dual Sport	82-83	———	———
DR250Z/D	82-83	———	622-406E
DR250F	1985	———	622-406E
SP250Z/D Dual Sport	82-83	———	622-406E
SP250F Dual Sport	1985	———	622-406E

Yamaha Street

Model	Year	Intake No.	Exhaust No.
SR185H/J Exciter	81-82	622-2013I	622-2013E
XS360C/D/2D	76-77	622-235I	622-235E
XS400D/E/2E/F/2F	77-79	622-235I	622-235E
XS400G/H Special II	80-81	622-235I	622-235E
XS400SG/SH Special	80-81	622-235I	622-235E
XS400SJ Heritage Special	1982	622-235I	622-235E
XS400J/K Maxim	82-83	622-201I	622-201E
XS400RJ/RK Seca	82-83	622-201I	622-201E
SR500E/F/G/H	78-81	622-2011I	622-2007E
XJ550H/J/K Maxim	81-83	622-205I	622-205E
XJ550RH/RJ/RK Seca	81-83	622-205I	622-205E
XZ550RJ/RK Vision	82-83	622-236I	622-205E
XJ650G/H/J/K Maxim	80-83	622-2004I	622-2004E
XJ650LH Midnight Maxim	1981	622-2004I	622-2004E
XJ650LJ/LK Seca Turbo	82-83	622-2004I	622-2004E
XJ650RJ Seca	1982	622-2004I	622-2004E
XJ750J/K Maxim	82-83	622-2004I	622-2004E
XJ750MK Midnight Maxim	1983	622-2004I	622-2004E
XJ750RH/RJ/RK Seca	81-83	622-2004I	622-2004E
XS750D/2D/E/F	77-79	622-201I	622-201E
XS750SE/SF Special	78-79	622-201I	622-201E
XV750H/J/K Virago	81-83	622-2003I	———
XV750MK Midnight Virago	1983	622-2003I	———
XV750U/UC-G/GC Virago	88-95	622-2003I	———
XS850G/H	80-81	622-201I	622-201E
XS850LG/LH Midnight Special	80-81	622-201I	622-201E
XS850SG/SH Special	80-81	622-201I	622-201E
XV920J/K Virago	82-83	622-2011I	622-2011E
XV920MK Midnight Virago	1983	622-2011I	622-2011E
XV920RH/RJ	81-82	622-2011I	622-2011E
XV1000L/LC/N/NC Virago	84-85	622-2011I	622-2011E
XJ1100J Maxim	1982	622-203I	622-203E
XS1100E/F	78-79	622-201I	622-201E
XS1100G/H	80-81	622-209I	622-209E
XS1100LG/LH Midnight Special	80-81	622-209I	622-209E
XS1100SF Special	1979	622-201I	622-201E
XS1100SG/SH Special	80-81	622-209I	622-209E
XV1100S/SC-L/LC Virago	86-99	622-2011I	622-2011E
VMX12N/NC-V/VC V-Max	85-06	622-2019I	622-2019E

Yamaha Dual Sport & Offroad

BW200N/S Big Wheel	85-86	622-2013I	622-2013E
BW200ES/ET/EU Big Wheel	86-88	622-2013I	622-2013E
TW200T/TC-V/VC Trailway	87-06	622-2013I	622-2013E
XT200J/K/KC Dual Sport	82-83	622-2013I	622-2013E
TT225S/T	86-87	622-2013I	622-2013E
TT500C/D/E/F/G/H	76-81	———	622-2007E
XT500C/D/E/F/G/H Dual Sport	76-81	———	622-2007E
XT550J/K Dual Sport	82-83	622-208I	———

Valve Stem Seals & Valve Keepers

Valve Stem Seals are sold pk/10. Valve Keepers sold each. Made in Japan. Valve Keeper quantity required for all engine valves is shown after Valve Keeper order number. **Sudco part number + (4) = Qt4, (8) = Qt8.**

Honda Street

Model	Year	Valve Stem Seal Pk/10	Valve Keeper Each
C70 Passport	80-83	620-001	———
C70K1 Honda 70	72-73	620-001	———
C70M Honda 70	70-71	620-001	———
CL70/K1/K2/K3 Scrambler	69-73	620-001	———
CL90 Scrambler 90	67-69	620-001	———
CB100K0/K1/K2 Super Sport	70-72	620-009	621-001 (4)
CL100K0/K1/K2 Scrambler	70-72	620-009	621-001 (4)
CL100S/S2/S3 Scrambler 100S	71-73	620-009	621-001 (4)
SL100K0/K1/K2/K3 Motosport	70-73	620-009	621-001 (4)
CB125S/S1/S2	73-75	620-009	621-001 (4)
CB125S	1976	620-009	621-001 (4)
CB125S	78-85	620-009	621-001 (4)
CL125S/S1 Scrambler 125	73-74	620-009	621-001 (4)
NX125	88-89	620-006	621-003 (4)
SS125A Super Sport 125	67-69	620-001	———
CA175 (CD175) Touring 175	68-69	620-001	———
CA175K3 Touring 175	69-70	620-001	———
CB175K3-K7 Super Sport 175	69-73	620-001	———
CL175K0 Scrambler 175	68-69	620-001	———
CL175K3-K7 Scrambler 175	69-73	620-001	———
CM185T Twinstar	78-79	620-009	621-001 (8)
CM200T Twinstar	80-82	620-009	621-001 (8)
CM250C	82-83	620-006	621-001 (8)
CMX250C Rebel	85-87	620-006	621-001 (8)
CMX250CD Rebel	1986	620-006	621-001 (8)
VTR250 Interceptor	88-90	620-010	621-002 (16)
CB350F/F1 (4 cylinder)	72-74	620-002	621-001 (16)
CB400A Automatic	1978	620-006 In	621-001 (8) In
		620-012 Ex	——— (4) Ex
CB400F Super Sport	75-77	620-002	621-001 (16)
CB400T Hawk	80-81	620-006 In	621-001 (8) In
		620-012 Ex	——— (4) Ex
CB400T1/TII Hawk	78-79	620-006 In	621-001 (8) In
		620-012 Ex	——— (4) Ex
CM400A Automatic	79-80	620-006 In	621-001 (8) In
		620-012 Ex	——— (4) Ex
CM400C Custom	1981	620-006 In	621-001 (8) In
		620-012 Ex	——— (4) Ex
CM400E	80-81	620-006 In	621-001 (8) In
		620-012 Ex	——— (4) Ex
CM400T	79-81	620-006 In	621-001 (8) In
		620-012 Ex	——— (4) Ex
CB450SC Nighthawk	82-86	620-006 In	621-001 (8) In
		620-012 Ex	——— (4) Ex
CB450T Hawk	1982	620-006 In	621-001 (8) In
		620-012 Ex	——— (4) Ex
CM450A Automatic	82-83	620-006 In	621-001 (8) In
		620-012 Ex	——— (4) Ex
CM450C Custom	1982	620-006 In	621-001 (8) In
		620-012 Ex	——— (4) Ex
CM450E	82-83	620-006 In	621-001 (8) In
		620-012 Ex	——— (4) Ex
CMX450C Rebel	86-87	620-006 In	621-001 (8) In
		620-012 Ex	——— (4) Ex

Honda Street

Model	Year	Valve Stem Seal Pk/10	Valve Keeper Each
CM450C Custom	1982	620-006 In	621-001 (8) In
		620-012 Ex	——— (4) Ex
CM450E	82-83	620-006 In	621-001 (8) In
		620-012 Ex	——— (4) Ex
CMX450C Rebel	86-87	620-006 In	621-001 (8) In
		620-012 Ex	——— (4) Ex
CB500/KI/K2	71-73	620-002	621-001 (16)
CX500	78-79	620-002	———
CX500C Custom	79-82	620-002	———
CX500D Deluxe	79-81	620-002	———
CX500TC	1982	620-002	———
FT500 Ascot	82-83	620-005	———
GL500 Silverwing	81-82	620-002	———
GL500I Silverwing Interstate	81-82	620-002	———
VF500C V30 Magna	84-85	620-010	621-002 (32)
VF500F Interceptor	84-86	620-010	621-002 (32)
VT500C Shadow 500	83-86	620-006 In	621-003 (8) In
		620-012 Ex	——— (4) Ex
VT500FT Ascot	83-84	620-006 In	621-003 (8) In
		620-012 Ex	——— (4) Ex
CB550F Super Sport	75-77	620-002	621-001 (16)
CB550/K1/K	74-78	620-002	621-001 (16)
CBR600F Hurricane	87-90	620-010	621-002 (32)
VT600C Shadow VLX	88-89	620-006 In	621-003 (8) In
		620-005 Ex	——— (4) Ex
NT650 Hawk GT	88-91	620-006 In	621-003 (8) In
		620-012 Ex	——— (4) Ex
NX650	88-89	620-005	———
CB650	79-82	620-009	621-001 (16)
CB650C Custom	80-81	620-009	621-001 (16)
CB650SC Nighthawk	1982	620-002	621-001 (16)
CB650SC Nighthawk 650	83-85	620-010	621-002 (32)
CX650C Custom	1983	620-002	———
CX650T Turbo	1983	620-002	———
GL650 Silverwing	1983	620-002	———
GL650I Silverwing Interstate	1983	620-002	———
CB700SC Nighthawk	84-85	620-010	621-002 (32)
VF700C Magna	84-87	620-006	621-003 (32)
VF700F Interceptor	84-85	620-006	621-003 (32)
VF700S Sabre	84-85	620-006	621-003 (32)
VFR700F/F2 Interceptor	86-87	620-006	621-003 (32)
VT700C Shadow	84-87	620-005	———
CB750A Automatic	76-78	620-002	———
CB750C Custom	80-82	620-006	621-001 (32)
CB750F Super Sport	75-78	620-002	———
CB750F Super Sport	79-82	620-006	621-001 (32)
CB750K0/K1-K5 750 Four	69-75	620-002	———
CB750K 750 Four	1976	620-002	———
CB750K 750 Four K	77-78	620-002	———
CB750K 750 Four K	79-82	620-006	621-001 (32)
CB750L LTD	1979	620-006	621-001 (32)
CB750SC Nighthawk	82-83	620-006	621-001 (32)
VF750C V45 Magna	82-83	620-006	621-001 (32)

Valve Stem Seals & Valve Keepers

Honda Street

Model	Year	Valve Stem Seal Pk/10	Valve Keeper Each
VF750C V45 Magna	1988	620-006	621-003 (32)
VF750F Interceptor	83-84	620-006	621-003 (32)
VF750S V45 Sabre	82-83	620-006	621-001 (32)
VFR750F Interceptor	1986	620-006	621-003 (32)
VT750C Shadow 750	1983	620-002	———
VT800C Shadow	1988	620-005	———
CB900C Custom	80-82	620-006	621-001 (32)
CB900F Super Sport	81-82	620-006	621-001 (32)
CB1000C Custom	1983	620-006	621-001 (32)
CBR1000F Hurricane	87-88	620-006	621-003 (32)
GL1000 Gold Wing	75-79	620-002	———
GL1000L LTD	1976	620-002	———
VF1000F Interceptor	1984	620-006	621-003 (32)
VF1000R	85-86	620-006	621-003 (32)
CBX six cyl. Super Sport	79-82	620-006	621-001 (48)
CB1100F Super Sport	1983	620-006	621-001 (32)
GL1100 Gold Wing	80-83	620-005	———
GL1100A Goldwing Aspencade	82-83	620-005	———
GL1100I Goldwing Interstate	80-83	620-005	———
VF1100C V65 Magna	83-86	620-006	621-003 (32)
VF1100S V65 Sabre	84-85	620-006	621-003 (32)
VT1100C Shadow 1100	85-90	620-005	———
GL1200 Gold Wing	1984	620-005	———
GL1200A Aspencade	84-87	620-005	———
GL1200I Interstate	84-87	620-005	———
GL1200L Limited	1985	620-005	———
GL1200SEi Aspencade	1986	620-005	———
GL1500 Goldwing	88-90	620-006	———

Kawasaki Street

***KZ400 (74-77) & *KZ550A/C applications, (1980-1981).Order valve keeper required. Difference is keeper groove on valves.**

KZ200A1/A2	78-79	620-601	621-604 (4)
EL250B2/B3 Eliminator	88-89	620-604	621-605 (16)
EX250E1/E2 Ninja 250R	86-87	620-604	621-605 (16)
EX250F2/F3/F4 Ninja 250R	88-90	620-604	621-605 (16)
KZ250D1/D2 LTD & CSR	80-81	620-601	621-604 (4)
KZ250L1 CSR	1982	620-601	621-604 (4)
KZ250W1 LTD	1983	620-601	621-604 (4)
EX305B1 GPz Belt	1983	620-603	621-603 (8)
KZ305A1/A2 CSR	81-82	620-603	621-603 (8)
KZ305B1 CSR Belt	1981	620-603	621-603 (8)
KZ305B2/B3 LTD	87-88	620-603	621-603 (8)
KZ400A1/A2 Deluxe	77-78	620-601	621-604 (8)
KZ400B1/B2	78-79	620-601	621-604 (8)
KZ400C1	1978	620-601	621-604 (8)
KZ400/D * up to engine 089779	74-75	620-601	621-606 (8)
KZ400/D/D3/D4 * from engine 089779	74-77	620-601	621-604 (8)
KZ400H1 LTD	1979	620-601	621-604 (8)
KZ400S/S2/S3 Special * up to engine 089779	75-77	620-601	621-606 (8)
KZ400S/S2/S3 Special * from engine 089779	75-77	620-601	621-604 (8)
KZ440A1/A2/A3/A4 LTD	80-83	620-601	621-604 (8)
KZ440B1/B2	80-81	620-601	621-604 (8)
KZ440D1/D2/D3/D4/D5 LTD	80-83	620-601	621-604 (8)
KZ440G1 Belt	1982	620-601	621-604 (8)
EN450A1-A6 LTD 454	85-90	620-603	621-603 (16)
EX500A1-A7	87-93	620-603	621-603 (16)
KZ550A1/A2 *	80-81	620-604	621-602 (16)
KZ550A1/A2 *	80-81	620-604	621-603 (16)
KZ550A3/A4	82-83	620-604	621-603 (16)
KZ550C1/C2 LTD *	80-81	620-604	621-602 (16)
KZ550C1/C2 LTD *	80-81	620-604	621-603 (16)
KZ550C3/C4 LTD	82-83	620-604	621-603 (16)

Kawasaki Street

Model	Year	Valve Stem Seal Pk/10	Valve Keeper Each
KZ550D1 GPz	1981	620-604	621-603 (16)
KZ550F1 Spectre	1983	620-604	621-603 (16)
KZ550F2 LTD Shaft	1984	620-604	621-603 (16)
KZ550H1/H2 GPz	82-83	620-604	621-603 (16)
ZX550A1/A2/A3 GPz	84-86	620-604	621-603 (16)
KL600A1 KLR600	1984	620-601	621-604 (8)
KL600B1/B2 KLR600	85-86	620-604	621-604 (8)
ZL600A1/A2 Eliminator	86-87	620-604	621-605 (32)
ZX600A1/A2/A3 Ninja 600R	85-87	620-604	621-605 (32)
ZX600B1 Ninja 600RX	1987	620-604	621-605 (32)
ZX600C1-C10 Ninja 600R	88-97	620-604	621-605 (32)
KL650A1-A19 KLR650	87-05	620-601	621-604 (8)
KZ650B1/B2/B2A/B3	77-79	620-601	621-604 (16)
KZ650C1/C2/C3 Custom	77-79	620-601	621-604 (16)
KZ650D1/D1A SR	1978	620-601	621-604 (16)
KZ650D2 SR	1979	620-601	621-604 (16)
KZ650E1 LTD	1980	620-601	621-604 (16)
KZ650F1	1980	620-601	621-604 (16)
KZ650H1/H2/H3 CSR	81-83	620-601	621-604 (16)
KZ700A1	1984	620-601	621-604 (16)
VN700A1 Vulcan	1985	620-603	621-603 (16)
ZN700A1/A2 LTD	84-85	620-601	621-604 (16)
KZ750B1/B2/B3/B4 2-cyl.	76-79	———	621-601 (8)
KZ750E1/E2/E3	80-82	620-601	621-604 (16)
KZ750F1 LTD Shaft	1983	620-601	621-604 (16)
KZ750G1 LTD 2-cyl.	1980	———	621-601 (8)
KZ750H1/H2/H3/H4 LTD	80-83	620-601	621-604 (16)
KZ750K1/K2 LTD 2-cyl.	83-84	———	621-601 (8)
KZ750L3	1983	620-601	621-604 (16)
KZ750M1 CSR 2-cyl.	1982	———	621-601 (8)
KZ750N1/N2 Spectre	82-83	620-601	621-604 (16)
KZ750R1 GPz	1982	620-601	621-604 (16)
VN750A2-A21 Vulcan 750	86-05	620-603	621-603 (16)
ZX750A1/A2/A3 GPz	83-85	620-601	621-604 (16)
ZX750E1/E2 GPz Turbo	84-85	620-601	621-604 (16)
ZX750F1/F2/F3/F4 Ninja 750R	87-90	620-604	621-605 (32)
KZ900A4/A5	76-77	620-601	621-606 (16)
KZ900B1 LTD	1976	620-601	621-606 (16)
KZ900C2 Police	1976	620-601	621-606 (16)
Z1/A/B-900	73-75	620-601	621-606 (16)
ZL900A1/A2 Eliminator	85-86	620-603	621-603 (32)
ZX900A1/A2/A3 Ninja 900R	84-86	620-603	621-603 (32)
KZ1000A1/A2	77-78	620-601	621-604 (16)
KZ1000A3/A3A/A4 MKII	79-80	620-601	621-604 (16)
KZ1000B1/B2/B3/B4 LTD	77-80	620-601	621-604 (16)
KZ1000C1/C1A/C2/C3/C4 Police	78-81	620-601	621-604 (16)
KZ1000D1 Z1R	1978	620-601	621-604 (16)
KZ1000D3 Z1R	1980	620-601	621-604 (16)
KZ1000E1/E2 Shaft ST	79-80	620-601	621-604 (16)
KZ1000J1/J2/J3	81-83	620-601	621-604 (16)
KZ1000K1/K2 LTD	81-82	620-601	621-604 (16)
KZ1000M1/M2 CSR	81-82	620-601	621-604 (16)
KZ1000P1-P21 Police	82-02	620-601	621-604 (16)
KZ1000R1/R2 Replica	82-83	620-601	621-604 (16)
ZG1000A1-A20 Concours	86-05	620-603	621-603 (32)
ZL1000A1 Eliminator	1987	620-603	621-603 (32)
ZX1000A1/A2 Ninja 1000R	86-87	620-603	621-603 (32)
ZX1000B1/B2/B3 Ninja ZX-10	88-90	620-604	621-605 (32)
KZ1100A1/A2/A3 Shaft	81-83	620-601	621-604 (16)
KZ1100B1/B2 GPz	81-82	620-601	621-604 (16)
KZ1100D1/D2 Spectre	82-83	620-601	621-604 (16)
KZ1100L1 LTD	1983	620-601	621-604 (16)
ZN1100B1/B2 LTD Shaft	84-85	620-601	621-604 (16)
ZX1100A1/A2 GPz	83-84	620-601	621-604 (16)
ZG1200A1 Voyager XII	1986	620-603	621-603 (32)
ZG1200B1-B17 Voyager XII	87-03	620-603	621-603 (32)
KZ1300A1/A2/A3/A4	79-82	620-601	621-604 (24)

Suzuki Street

Model	Year	Valve Stem Seal Pk/10	Valve Keeper Each
SP100D Dual Sport	1983	620-401	———
GN125Z/D	82-83	620-401	———
SP125Z/D Dual Sport	82-83	620-401	———
SP200G/H/J Dual Sport	86-88	620-401	———
GN250Z/D	82-83	620-401	———
GN250F	1985	620-401	———
GN250J	1988	620-401	———
GS250TT/TX	80-81	620-401	———
SP250Z/D Dual Sport	82-83	620-401	———
SP250F Dual Sport	1985	620-401	———
GS300LZ/LD	82-83	620-401	———
GS300LF	1985	620-401	———
GN400T/TX/TZ	80-82	620-402	621-401 (4)
GN400XT/XX	80-81	620-402	621-401 (4)
GS400B/XB/X/XC	77-78	620-402	621-401 (8)
SP400T Dual Sport	1980	620-402	621-401 (4)
GS425N/EN/LN	1979	620-402	621-401 (8)
GS450ET/EX/EZ/ED	80-83	620-402	621-401 (8)
GS450GAZ/GAD Automatic	82-83	620-402	621-401 (8)
GS450GAF Automatic	1985	620-402 In	621-401 (4)
		——— Ex	621-401 (4)
GS450LT/LXLZ/LD	80-83	620-402	621-401 (8)
GS450LF/LG/LH/LG	85-88	620-402 In	621-401 (4)
		——— Ex	621-401 (4)
GS450ST/SX	80-81	620-402	621-401 (8)
GS450TX/TXZ/TXD	81-83	620-402	621-401 (8)
SP500X/Z/D	81-83	620-402	621-401 (4)
GS550B/C/EC/N/EN/ET	77-80	620-402	621-401 (16)
GS550ED/ESD	1983	620-403	621-405 (32)
GS550ES3/ESE/EF/ESF/ESG	83-86	620-403	621-405 (32)
GS550LN/LT/LX/LZ	79-82	620-402	621-401 (16)
GS550LD	1983	620-403	621-405 (32)
GS550LF/LG	85-86	620-403	621-405 (32)
GS550MZ Katana	1982	620-402	621-401 (16)
GS550TX	1981	620-402	621-401 (16)
GSX600FJ-FY Katana	88-00	620-404	621-405 (32)
SP600F Dual Sport	1985	620-402	621-401 (8)
GR650D/XD Tempter	1983	620-402	
GS650EX/EZ	81-82	620-402	621-401 (16)
GS650GX/GZ/GD	81-83	620-402	621-401 (16)
GS650GLX/GLZ/GLD	81-83	620-402	621-401 (16)
GS650MD Katana	1983	620-402	621-401 (16)
LS650FFG/FFH Savage	86-87	620-402	———
LS650FPG/FPH/FPJ Savage	86-88	620-402	———
XN85D Turbo	1983	620-402	621-401 (16)
GS700EF/EFS	1985	620-401	———
GV700GLF/GLF2 Madura	1985	620-401	———
VS700GLFG/GLFH Intruder	86-87	620-401	———
VS700GLPG/GLPH Intruder	86-87	620-401	———
VS700GLEFG/GLEFH Intruder	86-87	620-401	———
VS700GLEPG/GLEPH Intruder	86-87	620-401	———
GS750B/C/N/EC/EN	77-79	620-402	621-401 (16)
GS750ET/EX/EZ	80-82	620-401	———
GS750ED/ESD	1983	620-401	———
GS750LN	1979	620-402	621-401 (16)
GS750LT/LX	80-81	620-401	———
GS750SD Katana	1983	620-401	———
GS750TZ/TD	82-83	620-401	———
GSX-R750G/H	86-87	620-404	621-405 (32)
GSX-R750RG	1986	620-404	621-405 (32)
GSX-R750J/K/L/N/M	88-92	620-404	621-405 (32)
VS750GLPJ-GLPM Intruder	88-91	620-401	———
GS850GN/GT/GX/GZ/GD	79-83	620-402	621-401 (16)
GS850GLT/GLX/GLZGLD	80-83	620-402	621-401 (16)
GS1000C/EC/N	78-79	620-402	621-401 (16)

Suzuki Street

Model	Year	Valve Stem Seal Pk/10	Valve Keeper Each
GS1000EN/ET	79-80	620-402	621-401 (16)
GS1000GT/GLT/GX/GLX	80-81	620-402	621-401 (16)
GS1000LN	1979	620-402	621-401 (16)
GS1000SN	1979	620-402	621-401 (16)
GS1000SZ Katana	1982	620-401	———
GS1100ET/EX/EZ	80-82	620-401	———
GS1100ED/ESD	1983	620-401	———
GS1100GZ/GLZ/GD/GLD	82-83	620-402	621-401 (16)
GS1100GKZ~GKE	82-84	620-402	621-401 (16)
GS1100LT	1980	620-401	———
GS1100SD Katana	1983	620-401	———
GSX-R1100G/H/J/K/L/M/N	86-92	620-404	621-405 (32)
GSX1100FJ-FP Katana	88-93	620-404	621-405 (32)
GS1150ES3/ESE/ESF	83-85	620-401	———
GS1150EF/EF2/EG/ESG	85-86	620-401	———
GV1200GLF/GLF2/GLG Madura	85-86	620-401	———
GV1400GCG/GCH Cavalcade	86-87	620-403	621-405 (32)
GV1400GDG/GDH/GDJ Cavalcade	86-88	620-403	621-405 (32)
GV1400GTG/GTH Cavalcade	86-87	620-403	621-405 (32)
VS1400GLFH-GLFN Intruder	87-92	620-401 In	———
		620-402 Ex	———
VS1400GLPH-GLPK4 Intruder	87-04	620-401 In	———
		620-402 Ex	———

Yamaha Street

XT125J/K/KC Dual Sport	82-83	620-203	621-201 (4)
SR185H/J Exciter	81-82	620-203	621-201 (4)
TW200T/TC-V/VC Trailway	87-06	620-203	621-201 (4)
XT200J/K/KC Dual Sport	82-83	620-203	621-201 (4)
SR250G/H/J Exciter	80-82	620-201	———
SR250TH Exciter	1981	620-201	———
SRX250T/TC	1987	620-204	———
XT250G/H/J/K/KC Dual	80-83	620-201	———
XT250L/LC Dual Sport	1984	620-204	———
XV250U/UC/W/WC/A/AC	88-90	620-206	———
XT350N/NC-M/MC Dual Sport	85-00	620-204	———
XS360C/D	76-77	620-201	———
FZR400U/SUC/W/SWC/A/SAC	88-90	620-207	———
XS400D/E/2E/F/2F	77-79	620-201	———
XS4002E/2F	78-79	620-201	———
XS400G/H Special II	80-81	620-201	———
XS400J/K Maxim	82-83	620-201	———
XS400RJ/RK Seca	82-83	620-201	———
XS400SG/SH Special	80-81	620-201	———
XS400SJ Heritage Special	1982	620-201	———
SR500E/F/G/H	78-81	620-202	———
TX500/A	73-74	620-204	———
XS500B/C/D/E	75-78	620-204	———
XT500C/D/E/F/G/H Dual Sport	76-81	620-202	———
XV500K Virago	1983	620-201	———
XV535T/TC/U/UC Virago	87-88	620-201	———
XJ550H/J/K Maxim	81-83	620-203	621-201 (16)
XJ550RH/RJ/RK Seca	81-83	620-203	621-201 (16)
XT550J/K Dual Sport	82-83	620-201	———
XZ550RJ/RK Vision	82-83	620-204	621-201 (16)
FJ600L/LC/N/NC	84-85	620-203	621-201 (16)
FZ600S/SC/T/TC/U/UC	86-88	620-203	621-201 (16)
SRX600S/SC	1986	620-201	———
XJ600SD/SDC-SK/SKC Seca II	92-98	620-205	———
XT600L/LC-EG/EGC Dual Sport	84-95	620-201	———
YX600S/SC-A/AC Radian	86-90	620-204	621-201 (16)
XJ650G/H/J/K Maxim	80-83	620-201	———
XJ650LH Midnight Maxim	1981	620-201	———
XJ650LJ/LK Seca Turbo	82-83	620-201	———
XJ650RJ Seca	1982	620-201	———

Valve Stem Seals, Keepers, Guides, Springs & Retainers

Yamaha Street

Model	Year	Valve Stem Seal Pk/10	Valve Keeper Each
XS1/XS1B/XS2-650	70-72	620-202	———
TX650/A	73-74	620-202	———
XS650B/C/D/E/F/2F	75-79	620-202	———
XS650G/H Special II	80-81	620-202	———
XS650SE/SF/SG Special	78-80	620-202	———
XS650SH/SJ/SK Heritage Special	81-83	620-202	———
XVS650K/KC-T/TC V-Star Custom	98-05	620-201	———
FZ700T/TC	1987	620-205	———
FZX700S/SC/T/TC Fazer	86-87	620-205	———
XJ700N/NC/S/SC Maxim	85-86	620-201	———
XJ700XN/XNC/XS/XSC Maxim	85-86	620-201	———
XV700L/LC/N/NC Virago	84-85	620-202	———
XV700CS/CSC/CT/CTC Virago	86-87	620-202	———
XV700SS/SSC Virago	1986	620-202	———
FZ750N/S/SC	85-86	620-205	———
FZ750U/UC	1988	620-205	———
FZR750RT/RU	87-88	620-205	———
TX750/A	73-74	620-201	———
XJ750J/K Maxim	82-83	620-201	———
XJ750MK Midnight Maxim	1983	620-201	———
XJ750RH/RJ/RK Seca	81-83	620-201	———
XS750D/2D/E/F	77-79	620-201	———
XS750SE/SF Special	78-79	620-201	———
XV750H/J/K Virago	81-83	620-202	———
XV750MK Midnight Virago	1983	620-202	———
XV750U/UC-H/HC Virago	88-96	620-201	———
XS850G/H	80-81	620-201	———
XS850LG/LH Midnight Special	80-81	620-201	———
XS850SG/SH Special	80-81	620-201	———
XJ900RK Seca	1983	620-201	———
XV920J/K Virago	82-83	620-202	———
XV920MK Midnight Virago	1983	620-202	———
FZR1000T/TC/U/UC	87-88	620-205	———
XV1000L/LC/N/NC Virago	84-85	620-202	———
FJ1100L/LC/N/NC	84-85	620-204	———
XJ1100J Maxim	1982	620-201	———
XS1100E/F/G/H	78-81	620-201	———
XS1100LG/LH Midnight Special	80-81	620-201	———
XS1100SF/SG/SH Special	79-81	620-201	———
XV1100S/SC-L/LC Virago	86-99	620-202	———
FJ1200S/SC/T/TC	86-87	620-204	———
VMX12N/NC/S/SC V-Max	85-86	620-204	———
VMX12U/UC-V/VC V-Max	88-06	620-204	———
XVZ12TK/L/KC2 Venture	83-84	———	621-201 (32)
XVZ12TDK Venture Royale	1983	———	621-201 (32)
XVZ12DL/DKC2/DN Venture Royale	84-85	———	621-201 (32)
XVZ13T/TC/U/UC Venture	87-88	———	621-201 (32)

APE High Performance Valve Guides

APE valve guides are made from special bronze alloy to resist wear and heat. Precision machined with the bores finished to size. They are designed to fit lower in the cylinder head to clear high lift cams, and use APE seals or factory OEM seals. Sold in sets for models listed.

Honda

Model	Year	APE No.	Order No.
750 SOHC	69-78	VGH750	875-200

Kawasaki

KZ650 thru KZ1100	2-Valve	VGK900	875-210
ZX1000 Ninja ZX10	88-90	VGK1100K	875-211
ZX1100 Ninja ZX11	90-01	VGK1100K	875-211

Suzuki

GS750/1100/1150	4 valve	VGS1100S	875-220
GSXR750/1100	thru 1992	VG750GSX	875-221
GSXR750W	93-95	VG1100GSX	875-222
GSXR1100W	93-98	VG1100GSX	875-222

Specials (oversize)

Kawasaki Z1/KZ1000/GPZ1100004"	99101-4	875-240
Kawasaki Z1/KZ1000/GPZ1100025"	99101-25	875-241

oversize repair guide (.502 dia)

APE Titanium Valve Spring Retainers

APE valve spring retainers are machined from aircraft quality titanium bar stock in the APE plant on the latest state of the art computerized CNC machinery. Sold in sets.

Models listed in Engine section on page 355.

APE High Performance Valve Springs

APE valve guides are made from special bronze alloy to resist wear and heat. Precision machined with the bores finished to size. They are designed to fit lower in the cylinder head to clear high lift cams, and use APE seals or factory OEM seals. Sold in sets.

Models listed in Engine section on page 355.

APE Manual Cam Chain Tensioners for Vintage Applications

A Must for any kind of performance riding. APE manual cam chain tensioner are CNC machined from billet alloy to exact tolerances for perfect fit. Designed to replace the automatic and hydraulic tensioner on high performance engines. The automatic adjusters can back out when the throttle is suddenly closed at high rpm. This allows the cams to go momentarily out of time and can result in bent valves and/or serious engine damage. Hydraulic tensioner have a tendency to put too much tension on the chain guide under high rpm/high oil pressure conditions resulting in premature wear. Both problems can be eliminated with the installation of the APE manual cam chain tensioner. No matter what the engine does, the cam chain tensioner will remain constant. Cam Chain Tensioner are sold each.

Kawasaki

Cam Chain Tensioner

Model	Year	APE No.	Order No.	Cometic No.	Order No.
EX500	87-08	KT1050	875-415	———	———
ZX600A Ninja 600R	85-87	KT1100	875-416	**comes with o-ring**	———
VN750A Vulcan 750 (*qt2 required)	86-03	KT1100	875-416*	**comes with o-ring**	———
KZ900A4/A5	76-77	KT1000	875-418	EC067	875-782
KZ900B1 LTD	1976	KT1000	875-418	EC067	875-782
Z1/A/B-900	73-75	KT1000	875-418	EC067	875-782
ZX900A Ninja 900R	84-86	KT1050	875-415	———	———
KZ1000A1/A2/A2A	77-78	KT1000	875-418	EC067	875-782
KZ1000A3/A3A/A4 MKII	79-80	KT1000	875-418	EC067	875-782
KZ1000B1/B2/B3/ B4 LTD	77-80	KT1000	875-418	EC067	875-782
KZ1000C1/C1A/C2/C3/C4 Police	78-81	KT1000	875-418	EC067	875-782
KZ1000D1 Z1R	1978	KT1000	875-418	EC067	875-782
KZ1000D3 Z1R	1980	KT1000	875-418	EC067	875-782
KZ1000E1/E2 Shaft ST	79-80	KT1000	875-418	EC067	875-782
KZ1000J	81-83	KT1100	875-416	**comes with o-ring**	———

Suzuki Street

GSX-R750 oil cooled	86-92	ST750	875-402	EC065	875-781
GS1100/1150	all	ST1100	875-404	EC062	875-789
GSX-R1100 oil cooled	87-92	ST750	875-402	EC065	875-781

Yamaha Street

FJ1100	84-85	YT1000	875-435	EC019	875-780
FJ1200	86-93	YT1000	875-435	EC019	875-780

APE Kawasaki Cam Chain Idler Adapter

This adapter allows the use of later model GPz 1100 or KZ1000J cylinder head on earlier model KZ900/KZ1000 lower end. It maintains the roller style cam chain. This is the only modification necessary to install the big valve head on early motor. Use with OEM KZ sprockets or high performance aftermarket versions.

Description	APE No.	Order No.
Cam Chain Idler Adapter with Pin	CCIA	875-450

Cam Chain Tensioners & Cam Sprockets

950-191

Cam Chain Tensioner Pushrod Kit

Each kit contains 4 pieces: 1 push rod (5mm longer than stock), 2 heavy duty springs and tensioner block gasket. Improves cam chain function, prevents cam chain noise and extends cam chain life. Made in Japan. Available for the following Kawasaki models.

Kawasaki

PRK-101	Order No. 950-191
Model	**Year**
KZ1000J1/J2/J3	81-83
KZ1000K1/K2 LTD	81-82
KZ1000M1/M2 CSR	81-82
KZ1000P1-P21 Police	82-02
KZ1000R1/R2 Replica	82-83
KZ1100A1/A2/A3 Shaft	81-83
KZ1100B1/B2 GPz	81-82
KZ1100D1/D2 Spectre	82-83
KZ1100L1 LTD	1983
ZN1100B1/B2 LTD Shaft	84-85
ZX1100A1/A2 GPz	83-84

PRK-102	Order No. 950-192
Model	**Year**
KZ650H1/H2/H3 CSR	81-83
KZ700A1	1984
ZN700A1/A2 LTD	84-85
KZ750E1/E2/E3	80-82
KZ750F1 LTD Shaft	1983
KZ750H1/H2/H3/H4 LTD	80-83
KZ750L3	1983
KZ750N1/N2 Spectre	82-83
KZ750R1 GPz	1982
ZR750C1/C2/C3 Zephyr	91-93
ZX750A1/A2/A3 GPz	83-85

PRK-103	Order No. 950-193
Model	**Year**
KZ550A1/A2/A3/A4	80-83
KZ550C1/C2/C3/C4 LTD	80-83
KZ550D1 GPz	1981
KZ550F1/F2 Spectre & LTD	83-84
KZ550H1/H2 GPz	82-83
KZ550M1 LTD	1983
ZR550B1/B2/B3/B4 Zephyr	90-93
ZX550A1/A2 GPz	84-85

APE Adjustable Cam Sprocket Assemblies

For models with Factory OEM Bolt on Sprockets

APE manufactures the original "billet" adjustable cam sprockets. APE sprockets are necessary for precise cam timing to achieve maximum performance. APE sprockets are fully machined on the latest state of the art computerized equipment to precision tolerances and fully heat treated for extra long wear life. Its cam sprockets are used by most leading racers who demand top performance along with the safety of not chancing their expensive racing heads to reworked stock sprockets.

Kawasaki

Model	Year	APE No	Order No
Z1/A/B-900	73-75	ACS900K	875-500
KZ900A4/A5	76-77	ACS900K	875-500
KZ1000A1/A2	77-78	ACS900K	875-500
KZ1000A3/A4 MKII	79-80	ACS1000K	875-501
KZ1000B1/B2 LTD	77-78	ACS900K	875-500
KZ1000B3/B4 LTD	79-80	ACS1000K	875-501
KZ1000D1 Z1R	1978	ACS900K	875-500
KZ1000D3 Z1R	1980	ACS1000K	875-501
KZ1000E1/E2 Shaft	79-80	ACS1000K	875-501
KZ1000J1/J2/J3	81-83	ACS1100K	875-503
KZ1000K1/K2	81-82	ACS1100K	875-503
KZ1000M1/M2	81-82	ACS1100K	875-503
KZ1000P Police	82-05	ACS1100K	875-503
KZ1000R1/R2 Replica	82-83	ACS1100K	875-503
KZ1000 (w/32T)		ACS1000K	875-501
ZX1100A GPz	83-84	ACS1100K	875-503

Suzuki

GSXR750G/H	86-87	ACS750S	875-521
GS1100E	80-83	ACS1100S	875-524
GS1150E	83-86	ACS1100S	875-524
GSXR1100	86-92	ACS1100GSX	875-522

Yamaha

FJ1100	84-85	ACS1100FJ	875-534
FJ1200	86-93	ACS1100FJ	875-534
YZF-R6	06-10	ACSY06R6	875-535

313-130

Sudco Cam Chains for Vintage Models

Sudco cam chains are stock replacements for the models listed. Cam Chains available are endless. Master links are not available. Made in Japan. Available for the following models:

Honda Street

Model	Year	Cam Chain Number x Links	Order No
CB750A Automatic	76-78	BF05M x 94L	—
CB750F Super Sport	76-78	BF05M x 94L	—
CB750K0/K1/K2/K3/K4/K5	69-75	BF05M x 94L	—
CB750K	76-78	BF05M x 94L	—

Kawasaki Street

KZ400A1/A2 Deluxe	77-78	BF05T x 88L	313-088
KZ400B1/B2/C1	78-79	BF05T x 88L	313-088
KZ400/D/D3/D4	74-77	BF05T x 88L	313-088
KZ400H1 LTD	1979	BF05T x 88L	313-088
KZ400S/S2/S3 Special	75-77	BF05T x 88L	313-088
KZ650B1/B2/B2A/B3	77-79	BF05T x 118L	311-001
KZ650C1/C2/C3 Custom	77-79	BF05T x 118L	311-001
KZ650D1/D1A/D2 SR	78-79	BF05T x 118L	311-001
KZ650E1 LTD	1980	BF05T x 118L	311-001
KZ650F1	1980	BF05T x 118L	311-001
KZ750B1/B2/B3/B4	76-79	BF05T x 130L	—
KZ750G1 LTD	1980	BF05T x 130L	—
Z1/Z1A/Z1B-900	73-75	BS05MH x 122L	—
KZ900A4/A5	76-77	BS05MH x 122L	—
KZ900B1 LTD	1976	BS05MH x 122L	—
KZ1000A1/A2/A2A	77-78	BS05MH x 122L	—
KZ1000A3/A3A/A4 MKII	79-80	BS05MH x 124L	—
KZ1000B1/B2/B3 LTD	77-79	BS05MH x 122L	—
KZ1000B4 LTD	1980	BS05MH x 124L	—
KZ1000C1/C1A/C2 Police	78-79	BS05MH x 122L	—
KZ1000C3/C4 Police	80-81	BS05MH x 124L	—
KZ1000D1 Z1R	1978	BS05MH x 122L	—
KZ1000D3 Z1R	1980	BS05MH x 124L	—
KZ1000E1/E2 Shaft ST	79-80	BS05MH x 124L	—
KZ1000G1 LTD Classic	1980	BS05MH x 124L	—

Suzuki Street

GS550B/C/EC/N/EN/ET	77-80	BF05M x 116L	311-016
GS550LN/LT/LX/LZ	79-82	BF05M x 116L	311-016
GS550MZ Katana	1982	BF05M x 116L	311-016
GS550TX	1981	BF05M x 116L	311-016
GSX600FJ/FK/FL/FM Katana	88-91	BF05M x 116L	311-016
GSX600FN/FP/FR/FS/FT Katana	92-96	BF05M x 116L	311-016
GS650EX/EZ	81-82	BF05M x 116L	311-016
GSX750FK-FV Katana	89-97	BF05M x 118L	—
GSX-R750G/H	86-87	BF05M x 116L	311-016
GSX-R750RG	1986	BF05M x 116L	311-016
GSX-R750J/K	88-89	BF05M x 118L	—
GSX-R750L/M/N	90-92	BF05M x 116L	311-016

Yamaha Street

FZR400U/SUC/W/SWC/A/SAC	88-90	BF04MA x 112L	—
FZR600W/WC/AC	89-90	BF04MA x 118L	—
FZR600RA/RAC-RL/RLC	90-99	BF04MA x 118L	—
FZ700T/TC	1987	BS05MH x 110L	311-026
FZX700S/SC/T/TC Fazer	86-87	BS05MH x 110L	311-026
FZ750N/S/SC	85-86	BS05MH x 110L	311-026
FZR750RT/RU	87-88	BS05MH x 110L	311-026
FZR1000T/TC/U/UC	87-88	BS05MH x 110L	311-026
FZR1000W/WC-G/GC	89-95	BS05MH x 108	—
XJ1100J Maxim	1982	BF05M x 128L	—
XS1100E/F/G/H	78-81	BF05M x 128L	—
XS1100LG/LH Midnight Special	80-81	BF05M x 128L	—
XS1100SF/SG/SH Special	79-81	BF05M x 128L	—
VMX12N/NC-T/TC V-Max	86-05	BF05M x 118L	—
VMX12V/VC V-Max	2006	BF05M x 118L	—

Motion Pro Chain Breaker & Riveting Tool

This tool is versatile enough to be used on cam chains or drive chains. 2mm breaking tip for most cam chains, 3mm breaking tip for chains #25-#35 only, and 4mm breaking tip for drive chain #428-#630, it is recommended to grind the rivet head. Each kit includes 3 pin sizes to fit most chains (2.2mm, 2.9mm, 3.8mm) and press plates. With plastic storage box and instructions.

Order No. 950-420

Replacement Parts

Description	Order No.
2mm Replacement Tip	950-421
3mm Replacement Tip	950-422
4mm Replacement Tip	950-423
Replacement Rivet Tip	950-424

Piston Rings

Piston Rings

Made in Japan to OEM specifications. Sold in sets for one piston. Order qt required. Use with OEM Pistons.

Honda

Model	Year	Size	OEM Reference	Order No.
CB900C Custom	80-82	0.25	13021-438-004	624-115R
CB900F Super Sport	81-82	0.25	13021-438-004	624-115R
CBX (1047cc)	79-82	0.25	13021-438-004	624-115R
GL1000K Goldwing	75-79	0.25	13021-371-004	624-120R
GL1000L Goldwing LTD	1976	0.25	13021-371-004	624-120R
GL1100 Goldwing	80-83	0.25	13021-463-000	624-124R
GL1100A Aspencade	82-83	0.25	13021-463-000	624-124R
GL1100I Interstate	80-83	0.25	13021-463-000	624-124R

Kawasaki

KZ400A1/A2 Deluxe	77-78	0.50	13025-5013	624-651R
KZ400D/D3/D4	75-77	0.50	13025-5013	624-651R
KZ400S/S2/S3 Special	75-77	0.50	13025-5013	624-651R
KZ440A1/A2/A3/A4 LTD	80-83	0.50	13025-5015	624-654R
KZ440B1/B2	80-81	0.50	13025-5015	624-654R
KZ440D1/D2/D3/D4/D5 LTD Belt	80-83	0.50	13025-5015	624-654R
KZ440G1 Belt	1983	0.50	13025-5015	624-654R
H2/A/B/C-750 Mach IV	72-75	0.50	13025-045	624-675R

Suzuki

GS450ET/EX/EZ	80-82	0.50	12140-44110-050	624-451R
GS450GAZ/GAD Automatic	82-83	0.50	12140-44110-050	624-451R
GS450GAF Automatic	1985	0.50	12140-44110-050	624-451R
GS450LT/LX/LZ/LD	80-83	0.50	12140-44110-050	624-451R
GS450LF/LG/LH/LJ	85-88	0.50	12140-44110-050	624-451R
GS450TX/TZ/TXZ/TXD	81-83	0.50	12140-44110-050	624-451R
GS550B/C/EC/N/EN/ET	77-80	0.50	12140-47031-050	624-454R
GS550LN/LT/LX/LZ	79-82	0.50	12140-47031-050	624-454R
GS550MZ	1982	0.50	12140-47031-050	624-454R
GS550TX	1981	0.50	12140-47031-050	624-454R
GS850GN/GT/GX/GZ/GD	79-83	0.50	12140-45120-050	624-466R
GS850GLT/GLX/GLZ/GLD	80-83	0.50	12140-45120-050	624-466R
GS1000C /EC/N/EN	78-79	0.50	12140-49001-050	624-469R
GS1000ET	1980	0.50	12140-49001-050	624-469R
GS1000GT/GX	80-81	0.50	12140-49001-050	624-469R
GS1000LN	1979	0.50	12140-49001-050	624-469R
GS1000SN/ST	80-81	0.50	12140-49001-050	624-469R
GS1100ET/EX/EZ/ED	80-83	0.50	12140-49220-050	624-472R
GS1100GZ/GLZ/GD/GLD	82-83	0.50	12140-49220-050	624-472R

Yamaha

RD400C/D/E/F	76-79	0.25	1A1-11601-25-00	624-251R
XV750H/J/K Virago	81-83	Std.	4X7-11610-00-00	624-271R
XV750MK Midnight Virago	1983	Std.	4X7-11610-00-00	624-271R

Motion Pro 4-Stroke Leakdown Tester

Checks percentage of cylinder leakage in a 4-stroke engine. Tester includes 10, 12, and 14mm spark plug adapters, regulator and gauge.

Order No. 950-401

Heavy Duty Cylinder Head Studs

Heavy duty cylinder studs are necessary to prevent head gasket leakage in high compression and turbocharged engines. Stock studs are made from poor material that will stretch and allow gasket leakage. APE studs are made from heat treated chrome molt and have rolled threads for maximum strength. Sold in sets.

Honda

CB750 SOHC	thru 78	CS750H	875-140

Kawasaki

KZ650/KZ750 2 valve fours	CS650K	875-100
KZ900/KZ1000/KZ1100	CS900K	875-102

Suzuki

GS1000 2 valve	CS1000S	———
GS1100	CS1100S	875-121
GS1150	CS1150S	875-122
GSXR1100, 1127cc case (40mm starter hole)	CS1127GSX	875-125

Yamaha

FJ1100/FJ1200	CS1100FJ	875-164

See Page 354 for Heavy Duty Cylinder Head Nuts

504-001

504-351

Sudco Engine Oil Seal Kits

Kits contain OEM seals required for engine rebuild. ***Made in Japan.***

Honda

Model	Year	Order No.
CB350F/F1 Super Sport	72-74	504-002
CB400F Super Sport	75-77	504-002
CB750K0/K1/K2/K3/K4/K5	69-75	504-001

Kawasaki

H1/A/B/C/D/E-500 Mach III	69-74	504-060
H2/A/B/C-750 Mach IV	72-75	504-061
Z1/A/B-900	73-75	504-065
KZ900A4	1976	504-065
KZ900B1 LTD	1976	504-065
KZ1000A1/A2	77-78	504-065
KZ1000A3/A3A/A4 MKII	79-80	504-065
KZ1000B1/B2/B3/B4 LTD	77-80	504-065
KZ1000D1 Z1R	1978	504-065
KZ1000D3 Z1R	1980	504-065
KZ1000E1/E2 Shaft	79-80	504-065
KZ1000G1 Classic LTD	1980	504-065

Yamaha

RD350/A/B 2-stroke	73-75	504-044
RD400C/D/E 2-stroke	76-78	504-044

K&S Engine Oil Seal Kits

Motorcycle engine oil seal kits for a complete engine rebuild. Available for the following applications.

Honda

Model	Year	Order No.
GB500	89-90	504-016
NX650	88-89	504-016

Yamaha

RZ350L/N/NC/NCII	84-85	504-042

Kawasaki Crankshaft Oil Seal Kits

Crankshaft (crank) oil seal kits include inner and outer seals. Sold in kits and each.

Kawasaki

Crankshaft Oil Seals - S3-400/KH400

Description	Qt	Order No.
Crankshaft Oil Seal Kit	4/pc kit	504-352
Left Side Outer	Each	504-316
Left Side Inner	Each	504-305
Right Side Inner	Each	504-305
Right Side Outer	Each	504-312
Model		**Year**
KH250A5		1976
S1A/B/C-250		73-75
S2/A-350		72-73
S3/A-400		74-75
KH400A3/A4/A5		76-78

Crankshaft Oil Seals - H1-500

Crankshaft Oil Seal Kit	4/pc kit	504-351
Left Side Outer	Each	504-311
Left Side Inner	Each	504-301
Right Side Inner	Each	504-302
Right Side Outer	Each	504-312
Model		**Year**
H1/A/B/C/D/E/F-500 Mach III		69-75
KH500A8 (2-stroke triple)		1976

Crankshaft Oil Seals- H2-750

Crankshaft Oil Seal Kit	4/pc kit	504-350
Left Side Outer	Each	504-313
Left Side Inner	Each	504-303
Right Side Inner	Each	504-304
Right Side Outer	Each	504-314
Model		**Year**
H2/A/B/C-750 Mach IV		72-75

Oil Pump Banjo Bolt Washer Kit

Oil pump banjo bolt washer kit for KH250 1976, S1-250 73-75, S3-350 72-73, KH-400 76-78, S3-400 74-75, H1-500 69-75, H2-750 72-75

Order No.	901-321

Oil Filter Bolt

Honda OEM 15420-333-000 Order No. 631-505

***This is a special order item.**

Application: Honda: CB650 79-82, **CB650C Custom** 80-81, **CB650SC Nighhawk** 1982, **CB750F Super Sport** 77-78

Connecting Rod Kits & Vent Filters

623-699

Sudco Kawasaki H1 & H2 Connecting Rod Kits

Sudco connecting rod kits are ***Made in Japan*** to meet or exceed OEM specifications. Kits contain crank pin, connecting rod, upper and lower pin bearing and thrust washers. Sold in kits. Crank Pin and Connecting Rod sold individually as shown.

Kawasaki H1-500

Description	Order No.
Connecting Rod Kit	623-699
Connecting Rod only	623-650
Crank Pin only	900-135
Applications	**Year**
H1/A/B/C/D/E/F-500 Mach III	69-75
KH500A8 2-stroke triple	1976

Kawasaki H2-750-Piston Pin Bearing not included

Description	Order No.
Connecting Rod Kit	623-698
Applications	**Year**
H2/A/B/C-750 Mach IV	72-75

005-198

005-199

K&N Rubber Base Crankcase Vent Filters

Filters are designed to clamp directly to metal or plastic tubing. Ideal for engines, transmissions, oil and gas tanks on racing vehicles. Sold each.

Flange I.D.	Filter Diameter	Filter Height	K&N No.	Order No.
Rubber Top				
1-1/4"	3"	2-1/2"	62-1380	005-198
Chrome Top				
1-1/4"	3"	2-1/2"	62-1390	005-199

005-195

005-196

005-197

K&N Steel Base Crankcase Vent Filters

One piece design for competition use. 2" O.D. x 1-1/2" long (height) with rubber top. All base plates are chrome plated. Sold each.

Vent Tube Diameter	K&N No.	Order No.
1/2"	62-1010	005-195
5/8"	62-1020	005-196
3/4"	62-1030	005-197

Vesrah Connecting Rod Kits

Vesrah connecting rod kits include connecting rod, crank pin bearing, crank pin, and thrust washers (as required). ***Made in Japan..***

Kawasaki Street

KZ200A1/A1A/A2	78-79	VA-4001	623-601
KZ250W1 LTD Belt	1983	VA-4004	623-604

Clutch Cover Gaskets

Made in Japan. Sold each

Honda Street

Model	Year	Vesrah Ref	Order No.
CB125S	81-82	VL-1016	643-1016
CB350F/F1 Super Sport	72-74	VL-1014	643-1014
CB350G	1973	VL-1013	643-1013
CB350/K1-K4 Super Sport	68-73	VL-1013	643-1013
CL350/K1-K5 Scrambler	68-73	VL-1013	643-1013
SL350K0/K1/K2 Motosport	69-73	VL-1013	643-1013
CB400F Super Sport	75-77	VL-1008	643-1008
FT500 Ascot	82-83	VL-1041	643-1041
VF500C V30 Magna	84-85	VL-1049	643-1049
VF500F V30 Interceptor	84-85	VL-1049	643-1049
CBR600F Hurricane	87-90	VL-1070	643-1070
VT600C Shadow VLX	88-89	VL-1071	643-1071
NT650 Hawk GT	88-91	VL-1071	643-1071
NX650	88-89	VL-1028	643-1028
CB700SC Nighthawk	84-86	VL-1050	643-1050
VF700F Interceptor	84-85	VL-1021	643-1021
VF700S Sabre	84-85	VL-1021	643-1028
VFR700F/F2 Interceptor	86-87	VL-1064	643-1064
VT700C Shadow	84-87	VL-1040	643-1040
CB750A Automatic	76-78	VL-1001	643-1001
CB750C Custom	80-82	VL-1002	643-1002
CB750F Super Sport	75-78	VL-1001	643-1001
CB750F Super Sport	79-82	VL-1002	643-1002
CB750K0/K1-K5 750 Four	69-75	VL-1001	643-1001
CB750K 750 Four	76-78	VL-1001	643-1001
CB750K	79-82	VL-1002	643-1002
CB750L LTD	1979	VL-1002	643-1002
CB750SC Nighthawk	82-83	VL-1002	643-1002
VF750C V45 Magna	82-83	VL-1021	643-1021
VF750C V45 Magna	1988	VL-1021	643-1021
VF750F V45 Interceptor	83-84	VL-1021	643-1021
VF750S V45 Sabre	82-83	VL-1021	643-1028
VT800C Shadow	1988	VL-1040	643-1040
CB900C Custom	80-82	VL-1002	643-1002
CB900F Super Sport	81-82	VL-1002	643-1002
CB1000C Custom	1983	VL-1002	643-1002
CBR1000F Hurricane	87-88	VL-1077	643-1077
GL1000 Goldwing	75-79	VL-1039	643-1039
GL1000L Goldwing LTD	1976	VL-1039	643-1039
VF1000F Interceptor	1984	VL-1021	643-1021
VF1000R	85-86	VL-1021	643-1021
CB1100F Super Sport	1983	VL-1002	643-1002
GL1100 Goldwing	80-83	VL-1032	643-1032
GL1100A Goldwing Aspencade	82-83	VL-1032	643-1032
GL1100I Goldwing Interstate	80-83	VL-1032	643-1032
VF1100C V65 Magna	83-86	VL-1058	643-1058
VF1100S V65 Sabre	84-85	VL-1058	643-1058
VT1100C Shadow	85-90	VL-1060	643-1060
GL1200 Goldwing	1984	VL-1066	643-1066
GL1200A Goldwing Aspencade	84-87	VL-1066	643-1066
GL1200I Goldwing Interstate	84-87	VL-1066	643-1066
GL1200L Goldwing LTD	1985	VL-1066	643-1066
GL1200SEi Goldwing Aspencade	1986	VL-1066	643-1066
GL1500 Goldwing	88-90	VL-1081	643-1081

Kawasaki Street

Model	Year	Vesrah Ref	Order No.
KZ400B1/B2	78-79	VL-4025	643-4025
KZ400C1	1978	VL-4025	643-4025
KZ400H1 LTD	1979	VL-4025	643-4025
KZ440A1/A2/A3/A4 LTD	80-83	VL-4025	643-4025
KZ440B1/B2	80-81	VL-4025	643-4025
KZ440D1/D2/D3/D4/D5 LTD Belt	80-83	VL-4025	643-4025
KZ440G1 Belt	1982	VL-4025	643-4025
EN450A1-A6 LTD 454	85-90	VL-4039	643-4039
EX500A1-A7	87-93	VL-4039	643-4039
KZ550A1/A2/A3/A4	80-83	VL-4024	643-4024
KZ550C1/C2/C3/C4 LTD	80-83	VL-4024	643-4024
KZ550D1 GPz	1981	VL-4024	643-4024
KZ550F1 Spectre	1983	VL-4024	643-4024
KZ550F2 LTD	1984	VL-4024	643-4024
KZ550H1/H2 GPz	82-83	VL-4024	643-4024
KZ550M1 LTD	1983	VL-4024	643-4024
ZX550A1/A2/A3 GPz	84-86	VL-4024	643-4024
KL600A1 KLR600	1984	VL-4013	643-4013
KL600B1/B2 KLR600	85-86	VL-4013	643-4013
ZL600A1/A2 Eliminator	86-87	VL-4035	643-4035
ZX600A1/A2/A3 Ninja 600R	85-87	VL-4035	643-4035
ZX600B1 Ninja 600RX	1987	VL-4035	643-4035
ZX600C1-C10 Ninja 600R	88-97	VL-4035	643-4035
KL650A1-A19 KLR650	87-05	VL-4013	643-4013
KZ650B1/B2/B2A/B3	77-79	VL-4005	643-4005
KZ650C1/C2/C3 Custom	77-79	VL-4005	643-4005
KZ650D1/D1A/D2 SR	78-79	VL-4005	643-4005
KZ650E1 LTD	1980	VL-4005	643-4005
KZ650F1	1980	VL-4005	643-4005
KZ650H1/H2/H3 CSR	81-83	VL-4005	643-4005
KZ700A1	1984	VL-4005	643-4005
ZN700A1/A2 LTD	84-85	VL-4005	643-4005
KZ750B1/B2/B3/B4 2-cylinder	76-79	VL-4002	643-4002
KZ750E1/E2/E3	80-82	VL-4005	643-4005
KZ750F1/F2 Spectre & LTD	83-84	VL-4005	643-4005
KZ750G1 LTD 2-cylinder	1980	VL-4002	643-4002
KZ750H1/H2/H3/H4 LTD	80-83	VL-4005	643-4005
KZ750K1/K2 2-cylinder	83-84	VL-4002	643-4002
KZ750L3	1983	VL-4005	643-4005
KZ750M1 CSR 2-cylinder	1983	VL-4002	643-4002
KZ750N1/N2 Spectre	82-83	VL-4002	643-4002
KZ750R1 GPz	1982	VL-4002	643-4002
ZX750A1/A2/A3 GPz	83-85	VL-4002	643-4002
ZX750E1/E2 GPz Turbo	84-85	VL-4002	643-4002
KZ900A4/A5	76-77	VL-4001	643-4001
KZ900B1 LTD	1976	VL-4001	643-4001
Z1/Z1A/Z1B-900	73-75	VL-4001	643-4001
ZL900A1/A2 Eliminator	85-86	VL-4014	643-4014
ZX900A1/A2/A3 Ninja 900R	84-86	VL-4014	643-4014
KZ1000A1/A2	77-78	VL-4001	643-4001
KZ1000A3/A3A/A4 MKII	79-80	VL-4001	643-4001
KZ1000B1/B2/B3/B4 LTD	77-80	VL-4001	643-4001
KZ1000C1/C1A/C2/C3/C4 Police	78-81	VL-4001	643-4001
KZ1000D1 Z1R	1978	VL-4001	643-4001
KZ1000D3 Z1R	1980	VL-4001	643-4001
KZ1000E1/E2 Shaft ST	79-80	VL-4001	643-4001
KZ1000G1 Classic LTD	1980	VL-4001	643-4001
KZ1000J1/J2/J3	81-83	VL-4004	643-4004
KZ1000K1/K2 LTD	81-82	VL-4004	643-4004
KZ1000M1/M2 CSR	81-82	VL-4004	643-4004
KZ1000P1-P21 Police	82-02	VL-4004	643-4004
KZ1000R1/R2 Replica	82-83	VL-4004	643-4004
ZG1000A1-A14 Concours	86-99	VL-4014	643-4014
ZL1000A1 Eliminator	1987	VL-4014	643-4014
ZX1000A1/A2 Ninja 1000R	86-87	VL-4014	643-4014
ZX1000B1/B2/B3 Ninja ZX-10	88-90	VL-4014	643-4014
KZ1100A1/A2/A3 Shaft	81-83	VL-4004	643-4004
KZ1100B1/B2 GPz	81-82	VL-4004	643-4004
KZ1100D1/D2 Spectre	82-83	VL-4004	643-4004
KZ1100L1 LTD	1983	VL-4004	643-4004

Clutch Cover Gaskets

Suzuki Street

Model	Year	Vesrah Ref	Order No.
GS450ET/EX/EZ/ED	80-83	VL-3006	643-3006
GS450LT/LX/LZ/LD	80-83	VL-3006	643-3006
GS450LF/LG/LH/LJ	85-88	VL-3006	643-3006
GS450ST/SX	80-81	VL-3006	643-3006
GS450TX/TZ	81-82	VL-3006	643-3006
GS450TX/TZ/TXZ/TXD	81-83	VL-3006	643-3006
GSX600FJ-FK5 Katana	88-05	VL-3039	643-3039
GS700EF/ESF	1985	VL-3016	643-3016
GS750B/C/EC/N/EN/LN	77-79	VL-3001	643-3001
GS750ET/EX/EZ	80-83	VL-3007	643-3007
GS750ED/ESD	1983	VL-3016	643-3016
GS750LT/LX	80-81	VL-3007	643-3007
GS750SD Katana	1983	VL-3007	643-3007
GS750TZ/TD	82-83	VL-3007	643-3007
GSX-R750G/H/J/K/L/M/N	86-92	VL-3039	643-3039
GSX-R750RG	1986	VL-3039	643-3039
GS850GN/GT/GLT/GX/GLX	79-81	VL-3001	643-3001
GS850GZ/GLZ/GD/GLD	82-83	VL-3009	643-3009
GS1000C/EC/N	78-79	VL-3002	643-3002
GS1000EN/ET	80-81	VL-3002	643-3002
GS1000GT/GX/GZ/GD	80-83	VL-3009	643-3009
GS1000GLT/GLX/GLZ/GLD	80-83	VL-3009	643-3009
GS1000LN	1979	VL-3009	643-3009
GS1000SN/ST	79-80	VL-3002	643-3002
GS1000SZ Katana	1983	VL-3008	643-3008
GS1100ET/EX/EZ/ED/ESD	80-83	VL-3008	643-3008
GS1100GKZ/GK2/GKD/GKE	82-84	VL-3009	643-3009
GS1100LT	1980	VL-3008	643-3008
GS1100SD Katana	1983	VL-3008	643-3008
GSX1100FJ-FP Katana	88-93	VL-3039	643-3039
GSX-R1100G/H/J/K/L/M/N	86-92	VL-3039	643-3039
GS1150ES3/EF/EF2/ESE/ESF	83-85	VL-3008	643-3008
GS1150EG/ESG	1986	VL-3008	643-3008
VS1400GLPH-GLPY Intruder	87-00	VL-3066	643-3066

Yamaha Street

RX50K	1983	VL-2024	643-2024
RX50MKMidnight	1983	VL-2024	643-2024
YSR50T/U/W/A/B/D	87-92	VL-2024	643-2024
RD125LC Water cooled (Europe)	82-84	VL-2030	643-2030
SR185H/J Exciter	81-82	VL-2017	643-2017
TW200T/TC-T1/T1C Trailway	87-05	VL-2012	643-2012
RD250LC Water cooled (Europe)	80-82	VL-2011	643-2011
XT250L/LC Dual Sport	1984	VL-2037	643-2037
RD350LC Water cooled (Europe)	80-85	VL-2011	643-2011
RZ350L/N/NC/NCII	84-85	VL-2011	643-2011
XT350N/NC-M/MC Dual Sport	85-00	VL-2037	643-2037
FZR400U/SUC/W/SWC/A/SAC	88-90	VL-2052	643-2052
SR500E/F/G/H	78-81	VL-2003	643-2003
XJ550H/J/K Maxim	81-83	VL-2006	643-2006
XJ550RH/RJ/RK Seca	81-83	VL-2006	643-2006
XT550J/K Dual Sport	82-83	VL-2013	643-2013
FJ600L/LC/N/NC	84-85	VL-2006	643-2006
FZ600S/SC/T/TC/U/UC	86-88	VL-2006	643-2006
SRX600S/SC	1986	VL-2013	643-2013

Yamaha Street

Model	Year	Vesrah Ref	Order No.
XT600L/LC-EG/EGC Dual Sport	84-95	VL-2013	643-2013
YX600S/SC-A/AC Radian	86-90	VL-2006	643-2006
XJ650G/H/J/K Maxim	80-83	VL-2022	643-2022
XJ650LH Midnight Maxim	1981	VL-2022	643-2022
XJ650LJ/LK Seca Turbo	82-83	VL-2022	643-2022
XJ650RJ Seca	1982	VL-2022	643-2022
XS1-650	1970	VL-2002	643-2002
XS1B-650	1971	VL-2002	643-2002
XS2-650	1972	VL-2002	643-2002
TX650/A	73-74	VL-2002	643-2002
XS650B/C/D/E/F	75-79	VL-2002	643-2002
XS6502F	1979	VL-2002	643-2002
XS650SE/SF Special	78-79	VL-2002	643-2002
XS650G/H Special II	80-81	VL-2002	643-2002
XS650SG/SH Special	80-81	VL-2002	643-2002
XS650SJ/SK Heritage Special	82-83	VL-2002	643-2002
FZ700T/TC	1987	VL-2045	643-2045
FZX700S/SC/T/TC Fazer	86-87	VL-2045	643-2045
XV700L/LC/N/NC Virago	84-85	VL-2005	643-2005
XV700CS/CSC/CT/CTC Virago	86-87	VL-2005	643-2005
XV700SS/SSC Virago	1986	VL-2005	643-2005
FZ750N/S/SC	85-86	VL-2045	643-2045
FZ750U/UC	1988	VL-2045	643-2045
FZR750RT/RU	87-88	VL-2045	643-2045
XS750D/2D/E/F	77-79	VL-2004	643-2004
XS750SE/SF Special	78-79	VL-2004	643-2004
XJ750J/K Maxim	82-83	VL-2022	643-2022
XJ750MK Midnight Maxim	1983	VL-2022	643-2022
XJ750RH/RJ/RK Seca	81-83	VL-2022	643-2022
XV750H/J/K Virago	81-83	VL-2005	643-2005
XXV750MK Midnight Virago	1983	VL-2005	643-2005
XV750U/UC-K/KC Virago	88-98	VL-2005	643-2005
XS850G/H	80-81	VL-2004	643-2004
XS850LG/LH Special	80-81	VL-2004	643-2004
XS850SG/SH Midnight Special	80-81	VL-2004	643-2004
XJ900RKSeca	1983	VL-2022	643-2022
XV920J/K Virago	82-83	VL-2005	643-2005
XV920MK Midnight Virago	1983	VL-2005	643-2005
XV920RH/RJ	81-82	VL-2005	643-2005
XV1000L/LC/N/NC Virago	84-85	VL-2005	643-2005
FZR1000T/TC/U/UC/W/WC/A/AC	87-90	VL-2045	643-2045
XJ1100J Maxim	1982	VL-2004	643-2004
XS1100E/F/G/H	78-81	VL-2004	643-2004
XS1100LG/LH Midnight Special	80-81	VL-2004	643-2004
XS1100SF/SG/SH Special	79-81	VL-2004	643-2004
XV1100S/SC-L/LC Virago	86-99	VL-2005	643-2005
FJ1200S/SC/T/TC	86-87	VL-2048	643-2048

642-4002

642-3006

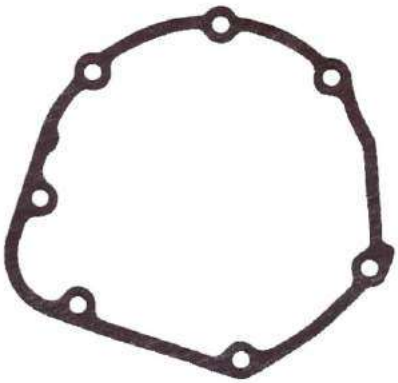

640-4026

Ignition Cover Gaskets (Point & Pulser)

Sold each. ***Made in Japan.***

Honda

Model	Year	Vesrah Ref	Order No.
CB500K0/K1/K2	71-73	VZ-1001	642-1001
CB550F Super Sport	75-77	VZ-1001	642-1001
CB550K0/K1	74-75	VZ-1001	642-1001
CB550K	76-78	VZ-1001	642-1001
CB750A Automatic	76-78	VZ-1001	642-1001
CB750C Custom	80-82	VK-1009	641-1009
CB750F Super Sport	75-78	VZ-1001	642-1001
CB750F Super Sport	79-82	VK-1009	641-1009
CB750K0/K1/K2/K3/K4/K5	69-75	VZ-1001	642-1001
CB750K	76-78	VZ-1001	642-1001
CB750K	79-82	VK-1009	641-1009
CB750L LTD	1979	VK-1009	641-1009
CB750SC Nighthawk	82-83	VK-1009	641-1009
CB900C Custom	80-82	VK-1009	641-1009
CB900F Super Sport	81-82	VK-1009	641-1009
CB1000C Custom	1983	VK-1009	641-1009
CB1100F Super Sport	1983	VK-1009	641-1009

Kawasaki

Z1/A/B-900	73-75	VZ-4002	642-4002
KZ900A4/A5	76-77	VZ-4002	642-4002
KZ900B1 LTD	1976	VZ-4002	642-4002
ZL900A1/A2 Eliminator	85-86	VY-4026	640-4026
ZX900A1/A2/A3 Ninja 900R	84-86	VY-4026	640-4026
KZ1000A1/A2	77-78	VZ-4002	642-4002
KZ1000A3/A3A/A4 MKII	79-80	VZ-4002	642-4002
KZ1000B1/B2/B3/B4 LTD	77-80	VZ-4002	642-4002
KZ1000C1/C1A/C2/C3/C4 Police	78-81	VZ-4002	642-4002
KZ1000D1 Z1R	1978	VZ-4002	642-4002
KZ1000D3 Z1R	1980	VZ-4002	642-4002
KZ1000E1/E2 Shaft	79-80	VZ-4002	642-4002
KZ1000G1 Classic LTD	1980	VZ-4002	642-4002
KZ1000J1/J2/J3	81-83	VU-4001	648-4001
KZ1000K1/K2 LTD	81-82	VU-4001	648-4001
KZ1000M1/M2 CSR	81-82	VU-4001	648-4001
KZ1000P1-P22 Police	82-02	VU-4001	648-4001
KZ1000R1/R2 Replica	82-83	VU-4001	648-4001
ZG1000A1-A20 Concours	86-05	VY-4026	640-4026
ZL1000A1 Eliminator	1987	VY-4026	640-4026
ZX1000A1/A2 Ninja 1000R	86-87	VY-4026	640-4026
ZX1000B1/B2/B3 Ninja ZX-10	88-90	VY-4026	640-4026
KZ1100A1/A2/A3 Shaft	81-83	VU-4001	648-4001
KZ1100B1/B2 GPz	81-82	VU-4001	648-4001
KZ1100D1/D2 Spectre	82-83	VU-4001	648-4001
KZ1100L1 1100 LTD Shaft	1983	VU-4001	648-4001
ZN1100B1/B2 1100 LTD Shaft	84-85	VU-4001	648-4001
ZX1100A1/A2 GPz	83-84	VZ-4001	648-4001

Suzuki

Model	Year	Vesrah Ref	Order No.
GSX600FJ-FK5 Katana	88-05	VZ-3006	642-3006
GS650GLX/GLZ	81-82	VZ-3003	642-3003
GS650GX/GZ	81-82	VZ-3003	642-3003
GS750B/C/EC/N/EN	77-79	VZ-3002	642-3002
GS750ET/EX	80-81	VZ-3003	642-3003
GS750LN	1979	VZ-3002	642-3002
GS750LT/LX	80-81	VZ-3003	642-3003
GS750TZ/TD	82-83	VZ-3003	642-3003
GSX-R750RG	1986	VZ-3006	642-3006
GSX-R750G/H/J/K/L/M/N	86-92	VZ-3006	642-3006
GS850GN/GT/GX/GZ/GD	79-83	VZ-3002	642-3002
GS850GLT/GLX/GLZ/GLD	80-83	VZ-3002	642-3002
GS1000C/EC/N/EN/ET	78-80	VZ-3002	642-3002
GS1000GT/GX	80-81	VZ-3002	642-3002
GS1000GLT/GLX	80-81	VZ-3002	642-3002
GS1000LN	1979	VZ-3002	642-3002
GS1000SN/ST	79-80	VZ-3002	642-3002
GS1000SZ Katana	1982	VZ-3003	642-3003
GS1100ET/EX	80-81	VZ-3003	642-3003
GS1100GZ/GD	82-83	VZ-3002	642-3002
GS1100GLZ/GLD	82-83	VZ-3002	642-3002
GS1100GKZ/GK2	1982	VZ-3002	642-3002
GS1100LT	1980	VZ-3003	642-3003
GSX1100FJ-FP Katana	88-93	VZ-3006	642-3006
GSX-R1100G/H/J/K/L/M/N	86-92	VZ-3006	642-3006

Point Cover & Stator Cover

Kawasaki Z1-900/KZ1000 Point Cover

Right side ignition cover for early model Z1/KZ900 and KZ1000 with point ignition. Kawasaki OEM reference 14027-023-080. ***Made in Japan.*** Sold each.

Order No. 900-160

Kawasaki

Model	Year
Z1/A/B-900	73-75
KZ900A4/A5	76-77
KZ900B1 LTD	1976
KZ1000A1/A2	77-78
KZ1000B1/B2 LTD	77-78
KZ1000C1/C1A Police	1978
KZ1000D1 Z1R	1978

Inner Kawasaki Point Cover Gasket

Holder cover (inner) gasket. Kawasaki OEM Reference 11061-1129, 11060-1071, 14046-023. Sold each. ***Made in Japan.***

Order No. 642-4001

Kawasaki

Model	Year
Z1/A/B-900	73-75
KZ900A4/A5	76-77
KZ900B1 LTD	1976
KZ1000A1/A2	77-78
KZ1000A3/A3A/A4 MKII	79-80
KZ1000B1/B2/B3/B4 LTD	77-80
KZ1000C1/C1A/C2/C3/C4 Police	78-81
KZ1000D1 Z1R	1978
KZ1000D3 Z1R	1980
KZ1000E1/E2 Shaft	79-80
KZ1000G1 Classic LTD	1980
KZ1000J1/J2/J3	81-83
KZ1000K1/K2 LTD	81-82
KZ1000M1/M2 CSR	81-82
KZ1000P1-P22 Police	82-02
KZ1000P24 Police	2005
KZ1000R1/R2 Replica	82-83
KZ1100A1/A2/A3 Shaft	81-83
KZ1100B1/B2 GPz	81-82
KZ1100D1/D2 Spectre	82-83
KZ1100L1 Shaft	1983
ZN1100B Shaft	84-85
ZX1100A1/A2 GPz	83-84

Kawasaki Z1-900/KZ1000 Stator Cover

Stator cover for early model Z1/KZ900 and KZ1000. Sold each.

Order No. 615-700

Kawasaki

Model	Year
Z1/A/B-900	73-75
KZ900A4/A5	76-77
KZ900B1 LTD	1976
KZ1000A1/A2	77-78
KZ1000B1/B2 LTD	77-78
KZ1000C1/C1A Police	1978
KZ1000D1 Z1R	1978

Sudco Oil Filters

Sudco Oil Filters are Made in Japan by the same manufacturers who supply oil filters to the OEM mfgs. Sudco Oil Filters are made to original manufacturer's specifications for fit, performance and quality. Sold each. **Note:** Oil Filters are listed in the Engine Section on page 372-387.

Stator Cover Gaskets (Alternator/Generator)

Made in Japan. Sold each.

Honda Street

Model	Year	Vesrah Ref	Order No.
CB350F/F1 Super Sport	72-74	VY-1003	640-1003
CB350G	1973	VY-1004	640-1004
CB350K0/K1-K4 Super Sport	68-73	VY-1004	640-1004
CL350K0/K1-K5 Scrambler	68-73	VY-1004	640-1004
SL350K0/K1/K2 Moto Sport	70-72	VY-1004	640-1004
CB360K0	1974	VY-1002	640-1002
CB360T	75-76	VY-1004	640-1004
CB400F Super Sport	75-77	VY-1003	640-1003
CB450D Super Sport 450	1967	VY-1002	640-1002
CB450K0 Super Sport 450	65-68	VY-1002	640-1002
CB450K1-K7 Super Sport 450	68-74	VY-1002	640-1002
CL450 Scrambler 450	1967	VY-1002	640-1002
CL450K1-K6 Scrambler 450	68-74	VY-1002	640-1002
CB500T	75-76	VY-1002	640-1002
NX650	88-89	VK-1070	641-1070
CB750A Automatic	76-78	VY-1001	640-1001
CB750F Super Sport	75-78	VY-1001	640-1001
CB750K0/K1-K5 750 Four	69-75	VY-1001	640-1001
CB750K 750 Four	76-78	VY-1001	640-1001

Kawasaki Street

EN450A1-A6 LTD 454	85-90	VY-4031	640-4031
EX500A1-A7	87-93	VY-4031	640-4031
KZ550A1/A2/A3/A4	80-83	VY-4014	640-4014
KZ550C1/C2/C3/C4 LTD	80-83	VY-4014	640-4014
KZ550D1 GPz	1981	VY-4014	640-4014
KZ550F1 Spectre	1983	VY-4014	640-4014
KZ550F2 LTD	1984	VY-4014	640-4014
KZ550H1/H2 GPz	82-83	VY-4014	640-4014
KZ550M1 LTD	1983	VY-4014	640-4014
ZX550A1/A2/A3 GPz	84-86	VY-4014	640-4014
KL600B1/B2 KLR600 Dual Sport	85-86	VY-4033	640-4033
ZL600A1/A2 Eliminator	86-87	VY-4028	640-4028
ZL600B2/B3 Eliminator	96-97	VY-4028	640-4028
ZX600A1/A2/A3 Ninja 600R	85-87	VY-4028	640-4028
ZX600B1 Ninja 600RX	1987	VY-4028	640-4028
ZX600C1-C10 Ninja 600R	88-97	VY-4028	640-4028
KL650A1-A19 KLR650 Dual Sport	87-05	VY-4033	640-4033
KZ650B2/B2A/B3	78-79	VY-4017	640-4017
KZ650C2/C3 Custom	78-79	VY-4017	640-4017
KZ650D1/D1A/D2 SR	78-79	VY-4017	640-4017
KZ650E1 LTD	1980	VY-4017	640-4017
KZ650F1	1980	VY-4017	640-4017
KZ650H1/H2/H3 CSR	81-83	VY-4017	640-4017
KZ700A1	1984	VY-4017	640-4017
ZN700A1/A2 LTD	84-85	VY-4017	640-4017
KZ750B1/B2/B3/B4 2-cylinder	76-79	VY-4019	640-4018
KZ750E1/E2/E3	80-82	VY-4017	640-4017
KZ750F1/F2 Spectre & LTD	83-84	VY-4017	640-4017
KZ750G1 LTD 2-cylinder	1980	VY-4018	640-4018
KZ750H1/H2/H3/H4 LTD	80-83	VY-4017	640-4017
KZ750K1/K2 2-cylinder	83-84	VY-4018	640-4018
KZ750L3	1983	VY-4017	640-4017
KZ750M1 CSR 2-cylinder	1983	VY-4018	640-4018
KZ750N1/N2 Spectre	82-83	VY-4017	640-4017
KZ750R1 GPz	1982	VY-4017	640-4017
ZX750A1/A2/A3 GPz	83-85	VY-4017	640-4017
ZX750E1/E2 GPz Turbo	84-85	VY-4017	640-4017

Kawasaki Street

Model	Year	Vesrah Ref	Order No.
KZ900A4/A5	76-77	VY-4001	640-4001
KZ900B1 LTD	1976	VY-4001	640-4001
Z1/Z1A/Z1B-900	73-75	VY-4001	640-4001
KZ1000A1/A2	77-78	VY-4001	640-4001
KZ1000A3/A3A/A4 MKII	79-80	VY-4001	640-4001
KZ1000B1/B2/B3/B4 LTD	77-80	VY-4001	640-4001
KZ1000C1/C1A/C2/C3/C4 Police	78-81	VY-4001	640-4001
KZ1000D1 Z1R	1978	VY-4001	640-4001
KZ1000D3 Z1R	1980	VY-4001	640-4001
KZ1000E1/E2 Shaft ST	79-80	VY-4001	640-4001
KZ1000G1 Classic LTD	1980	VY-4001	640-4001
KZ1000J1/J2/J3	81-83	VY-4001	640-4001
KZ1000K1/K2 LTD	81-82	VY-4001	640-4001
KZ1000M1/M2 CSR	81-82	VY-4001	640-4001
KZ1000P1-P21 Police	82-02	VY-4001	640-4001
KZ1000R1/R2 Replica	82-83	VY-4001	640-4001
KZ1100A1/A2/A3 Shaft	81-83	VY-4001	640-4001
KZ1100B1/B2 GPz	81-82	VY-4001	640-4001
KZ1100D1/D2 Spectre	82-83	VY-4001	640-4001
KZ1100L1 LTD	1983	VY-4001	640-4001
ZN1100B1/B2 LTD	84-85	VY-4001	640-4001
ZX1100A1/A2 GPz	83-84	VY-4001	640-4001
KZ1300A1/A2/A3/A4	79-82	VY-4027	640-4027
KZ1300B2 Tourer	1980	VY-4027	640-4027
ZN1300 A1-A6 Voyager	83-87	VY-4027	640-4027

Suzuki Street

GS450ET/EX/EZ/ED	80-83	VY-3002	640-3002
GS450LT/LX/LZ/LD	80-83	VY-3002	640-3002
GS450LF/LG/LH/LJ	85-88	VY-3002	640-3002
GS450ST/SX	81-82	VY-3002	640-3002
GS450TX/TZ	81-82	VY-3002	640-3002
GS450TX/TZ/TXZ/TXD	82-83	VY-3002	640-3002
GS550B/C/EC/N/EN	77-79	VY-3003	640-3003
GS550ET	1980	VY-3003	640-3003
GS550ED/ESD	1983	VY-3009	640-3009
GS550ES3/ESE/EF/ESF/ESG	83-86	VY-3009	640-3009
GS550LN/LT/LX/LZ	79-82	VY-3003	640-3003
GS550LD	1983	VY-3009	640-3009
GS550LF/LG	85-86	VY-3009	640-3009
GS550MZ Katana	1982	VY-3003	640-3003
GS550TX	1981	VY-3003	640-3003
GS650EX/EZ	81-82	VY-3003	640-3003
LS650FG/FH Savage	86-87	VY-3035	640-3035
LS650PG/PH/PJ Savage	86-88	VY-3035	640-3035
GS700EF/ESF	1985	VY-3007	640-3007
VS700GLFG/GLFH Intruder	86-87	VY-3045	640-3045
VS700GLPG/GLPH Intruder	86-87	VY-3045	640-3045
VS700GLEFG/GLEFH Intruder	86-87	VY-3045	640-3045
VS700GLEPG/GLEPH Intruder	86-87	VY-3045	640-3045
GS750B/C/EC/N/EN	77-79	VY-3004	640-3004
GS750ET/EX/EZ	80-82	VY-3005	640-3005
GS750ED/ESD	1983	VY-3007	640-3007
GS750LN	1979	VY-3004	640-3004
GS750LT/LX	80-81	VY-3005	640-3005
GS750TZ/TD	82-83	VY-3005	640-3005
GS750SD Katana	1983	VY-3005	640-3005
VS750GLPJ/K/L/M	88-91	VY-3045	640-3045
GS850GN/GT/GX/GZ/GD	79-83	VY-3004	640-3004
GS850GLT/GLX/GLZ/GLD	80-83	VY-3004	640-3004

Stator Cover Gaskets, Oil Pan Gasket & Oil Level Gauge

Suzuki Street

Model	Year	Vesrah Ref	Order No.
GS1000C/EC/N/EN/ET	78-80	VY-3004	640-3004
GS1000GT/GX	80-81	VY-3004	640-3004
GS1000GLT/GLX	80-81	VY-3004	640-3004
GS1000LN	1979	VY-3004	640-3004
GS1000SN/ST	79-80	VY-3004	640-3004
GS1000SZ Katana	1983	VY-3005	640-3005
GS1100ET/EX/EZ	80-82	VY-3005	640-3005
GS1100ED/ESD	1983	VY-3005	640-3005
GS1100GZ/GLZ/GD/GLD	82-83	VY-3004	640-3004
GS1100GKZ/GK2/GKD/GKE	82-84	VY-3004	640-3004
GS1100LT	1980	VY-3005	640-3005
GS1100SD Katana	1983	VY-3005	640-3005
GS1150ES3/ESE/EF/ESF/EF2	83-85	VY-3005	640-3005
GS1150EG/ESG	1986	VY-3005	640-3005
VS1400GLPH-GLPY Intruder	87-00	VY-3046	640-3046

Yamaha Street

Model	Year	Vesrah Ref	Order No.
XT250L/LC	1984	VK-2017	641-2017
XT350N/NC-M/MC Dual Sport	85-00	VK-2017	641-2017
XT550J/K Dual Sport	82-83	VK-2011	641-2011
XT600L/LC-W/WC Dual Sport	84-89	VK-2011	641-2011
FZR400U/SUC-A/SAC	88-90	VK-2032	641-2032
SRX600S/SC	1986	VK-2011	641-2011
XV700L/LC/N/NC Virago	84-85	VK-2021	641-2021
XV700CS/CSC/CT/CTC Virago	86-87	VK-2021	641-2021
XV700SS/SSC Virago	1986	VK-2021	641-2021
XV750H/J/K Virago	81-83	VK-2021	641-2021
XV750MK Midnight Virago	1983	VK-2021	641-2021
XV750U/UC-G/GC Virago	88-95	VK-2021	641-2021
XV920J/K Virago	82-83	VK-2021	641-2021
XV920MK Midnight Virago	1983	VK-2021	641-2021
XV920RH/RJ	81-82	VK-2021	641-2021
XV1000L/LC/N/NC Virago	84-85	VK-2021	641-2021
XV1100S/SC-L/LC Virago	86-99	VK-2021	641-2021

Oil Level Gauge

Oil sight gauge for Kawasaki Z1/ KZ1000 models.
Sold each. ***Made in Japan.***

OEM Reference 52015-004 **Order No.** 950-265

Kawasaki

Model	Year
KZ650B1/B2/B2A/B3	77-79
KZ650D1/D1A/D2 SR	78-79
KZ750B1/B2/B3/B4 2-cylinder	75-79
KZ750G1 LTD 2-cylinder	1980
Z1/A/B-900	73-75
KZ900A4/A5	76-77
KZ900B1 LTD	1976
KZ1000A1/A2	77-78
KZ1000A3/A3A/A4 MKII	79-80
KZ1000B1/B2/B3/B4 LTD	77-80
KZ1000C1/C1A-C4 Police	78-81
KZ1000D1 Z1R	1978
KZ1000D3 Z1R	1980
KZ1000E1/E2 Shaft ST	79-80
KZ1000G1 LTD Classic	1980
KZ1300A1/A2 up to engine no. 009426	79-80

Oil Pan Gasket

Sold each. ***Made in Japan.***

OEM Reference 11060-1074 **Order No.** 646-4001

Kawasaki

Model	Year
Z1/Z1A/Z1B-900	73-75
KZ900A4/A5	76-77
KZ900B1 LTD	1976
KZ1000A1/A2	77-78
KZ1000A3/A3A/A4 MKII	79-80
KZ1000B1/B2/B3/B4 LTD	77-80
KZ1000C1/C1A/C2/C3/C4	78-81
KZ1000D1 Z1R	1978
KZ1000D3 Z1R	1980
KZ1000E1/E2 Shaft ST	79-80
KZ1000G1 Classic LTD	1980
KZ1000J1/J2/J3	81-83
KZ1000K1/K2 LTD	81-82
KZ1000M1/M2 CSR	81-82
KZ1000P1-P21 Police	82-02
KZ1000R1/R2 Replica	82-83
KZ1100A1/A2/A3 Shaft	81-83
KZ1100B1/B2 GPz	81-82
KZ1100D1/D2 Spectre	82-83
KZ1100L1 LTD	1983
ZN1100B1/B2 LTD	84-85
ZX1100A1/A2 GPz	83-84

Honda CB750 K0 Oil Hoses

Pair of oil hoses are wrapped in a soft fabric texture.
Sold as a pair only. **Order No.** 950-260

Hose A: **OEM Reference:** 15510-300-017

Model	Year	Vin #
CB750F A	1975	CB750F-1000002 to CB750F-1015054
CB750F A	1976	CB750F-2000003 to CB750F-2022317
CB750F A	1977	CB750F-2100011 to CB750F-2111489
CB750F A	1978	CB750F-2200001
CB750K A	69-70	CB750-1000001
CB750K A	1976	CB750-2540001 to CB750-2575894
CB750K A	1977	CB750-2700009 to CB750-2729534
CB750K A	1978	CB750-2800001
CB750 K1 A	70-71	CB750-1044650
CB750 K2 A	1972	CB750-2000001
CB750 K3 A	1973	CB750-2200001
CB750 K4 A	1974	CB750-2300001
CB750 K5 A	1975	CB750-2500001

Hose A

Hose B

Hose B: **OEM Reference:** 15510-300-007

Model	Year	Vin #
CB750K A	69-70	CB750-1000001
CB750K A	1976	CB750-2540001 to CB750-2575894
CB750 K1 A	70-71	CB750-1044650
CB750 K2 A	1972	CB750-2000001
CB750 K3 A	1973	CB750-2200001
CB750 K4 A	1974	CB750-2300001
CB750 K5 A	1975	CB750-2500001

SUNSTAR

RK Drive Chain

Available sizes are O-ring 530XS0/630S0.
RK Chain is listed in engine section.

Links	O-Ring 530XSO	O-Ring GR530SO "Gold"	O-Ring 630SO
1	———	———	———
80	325-001	———	326-001
82	325-002	———	326-002
84	325-003	———	326-003
86	325-004	———	326-004
88	325-005	———	326-005
90	325-006	———	326-006
92	325-007	———	326-007
94	325-008	———	326-008
96	325-009	———	326-009
98	325-010	———	326-010
100	325-011	———	326-011
102	325-012	———	326-012
104	325-013	———	326-013
106	325-014	———	326-014
108	325-015	———	326-015
110	325-016	———	326-016
112	325-017	———	326-017
114	325-018	———	326-018
116	325-019	———	326-019
118	325-020	———	326-020
120	325-021	329-021	326-021
130	———	———	———
Conn. Links	325-099	———	326-099
Rivet Links	325-098	329-026	326-098

Sunstar Steel Sprockets

OEM replacements for applications listed. Sold each.

Honda

Model	Year	Stock	Counter	Stock	Rear
CB400F Super Sport	75-77	17T	———	44T	330-196
CB750K0	1969	18T	33250718	45T	330-036
CB750K1/K2/K3		17T	33250717	48T	330-016
CB900F Super Sport	80-82	17T	33251217	44T	330-072
CBX	80-82		———	44T	330-072
CB1100F Super Sport	1983		———	44T	330-072

Kawasaki

S3/A-400	74-75		———	41T	———
KH400A	76-78		———	41T	———
H1B/C/D/E/F-500	71-75		———	45T	330-604
KH500A8 (2-stroke triple)	1976		———	45T	330-604
Z1/A/B-900	73-75	15T	33260515	35T	330-622
KZ1000A3/A3A/A4 MKII	79-80	15T	33260515	35T	330-616
KZ1000D1 Z1R	1978	15T	33260515	33T	330-612
KZ1000D1 Z1R	1980	15T	33260515	35T	330-616
KZ1000J1/J2	81-82	15T	33260515	41T	330-643
KZ1000R1/R2 Replica	82-83	15T	33260515	41T	330-643
KZ1100B1 GPz	1981	15T	33260515	41T	330-643
KZ1100B2 GPz	1982	15T	33260515	42T	———

Master Link Clip Pliers

Designed to simplify installation and removal of clip-type master links, one tip is shorter and notched to be placed on the pin which allows the longer end to push the clip.

Order No. 950-759

Kawasaki Chain Adjuster Bolt & Nut

Sold as set of 2.

Description	Part No.
8mm	901-305
10mm	901-306

Suspension Parts & Steering Stem Bearings

900-213

Fork Tubes

Fork Tubes are sold in pairs. Replacement Fork Seals listed after Fork Tube.

Honda

Model	Year	Fork Tube Order No.	Fork Seals (pr)
CB77 Super Hawk 305	61-68	———	———
CL77 Scrambler 305	65-68	———	———
CB400F Super Sport	75-77	———	516-1015
CB750		900-202	———

Kawasaki

H1/A/C-500 Mach III	69-72	———	516-1016
H1B-500 2-stroke triple	1972	900-212	516-1025
H1D/E/F-500 2-stroke triple	73-75	900-212	516-1025
KH500A 2-stroke triple	1976	900-212	516-1025
H2/A/B/C-750 Mach IV	72-75	900-212	516-1025
Z1/A/B-900	73-75	———	516-1025
KZ900A4/A5	76-77	———	516-1025
KZ900B1 LTD	1976	———	516-1025
KZ1000A1	1977	———	516-1025

Yamaha DT1-250 Fork Tube Piston

For early model DT1-250 front forks. Sold in pairs.

Order No. 900-285

Steering Stem Bearing Kits

Quality bearing kits sourced from **Japan** and made to OEM specifications. Kits with an * **(asterisk)** are an upgrade from stock ball bearing/race to tapered bearing for improved handling and longer life. All other kits are replacements for original tapered bearings.
Made in Japan. **Model applications are listed on page 428-435.**

K&S Fork Seal Kits & Dust Seal Kits

Fork Seals and Dust Seals sold in kits. (Pairs)
Model applications are listed on page 412-425

Fork Dust Boot (Dust Shield) NEW

Replaces Kawasaki OEM 44010-032. Sold in pair.
Available for the following Kawasaki models.

Order No. 516-010

Kawasaki Street

Model	Year
H1D/H1E/H1F-500	73-75
KH500A8	1976
KZ650B1/B2/B2A/B3	77-79
KZ650C1/C2/C3 Custom	77-79
KZ650D1/D1A/D2 SR	78-79
KZ650E1 LTD	1980
KZ650F1	1980
KZ750B1/B2/B3/B4 2-cyl.	77-79
KZ750G1 LTD 2-cylinder	1980
KZ900A4/A5	76-77
KZ900B1 LTD	1976
KZ1000A2/A2A	1978
KZ1000A3/A3A/A4 MKII	79-80
KZ1000B1/B2/B3/B4 LTD	77-80
KZ1000D1 Z1R	1978
KZ1000D3 Z1R	1980
KZ1000G1 LTD Classic	1980

Kawasaki Offroad

KXT250A1/A2 Tecate 3	84-85
KX250/A/A3	74-76
KX250A4/A5	78-79
KX400/A2	75-76

Kawasaki H1-500 rear 611-420

Vesrah Brake Pads & Brake Shoes

Sold in sets. For a complete listing of vintage applications not shown, see **Vesrah Brake Pad & Brake Shoes** in control section.
Order per qt needed. Some models listed require qt 2 sets.
Made in Japan.
610 = Kevlar Brake Pads **611 = Kevlar Brake Shoes**
NS= Sintered Pads/ Sintered Shoes

Honda

Model	Year	Front	Rear
CA175 Touring (CD175)	68-69	611-135NS	———
CA175K3 Touring (CD175)	69-70	611-135NS	———
CB72 Hawk 250	61-66	611-117	611-117
CL72 Scrambler 250	62-65	———	611-117
CB77 Super Hawk 305	61-68	611-117	611-117
CB350F/F1 Super Sport	72-74	610-102	611-127
CB400F Super Sport	75-77	610-102	611-127
CB450K0 Super Sport	65-68	611-117	———
CB450K1/K2 Super Sport	68-69	611-117	———
CL450K1-K6 Scrambler	68-74	611-117	———
CB500K0/K1/K2	71-73	610-102	611-128
CB500T (2-cyl.)	75-76	610-102	611-128
CX500	78-79	———	611-133
CX500C Custom	79-80	———	611-133
CX500C Custom	1981	610-112	611-133
CX500C Custom	1982	610-123	611-133
CX500D Deluxe	79-80	———	611-133
CX500D Deluxe	1981	610-112	611-133
CX500TC Turbo	1982	610-123	610-123
FT500 Ascot	82-83	610-123	610-123
GL500 Silver Wing	81-82	610-123	611-133
GL500I Silver Wing Interstate	81-82	610-123/2	611-133
CB550F Super Sport	75-77	610-102	611-128
CB550K0/K1	74-75	610-102	611-128
CB550K	76-78	610-102	611-128
CB550SC Nighthawk	1983	610-123	611-132
CB750A Automatic	76-78	610-102	611-129
CB750C Custom	80-81	———	611-129
CB750C Custom	1982	610-123/2	611-129
CB750F Super Sport	75-76	610-102	610-108
CB750F Super Sport	77-79	610-112	610-112
CB750K0/K1/K2/K3/K4/K5	69-75	610-101	611-129
CB750K	1976	610-101	611-129
CB750K	77-78	610-102	611-129
CB750K	79-81	———	611-129
CB750K	1982	610-123	611-129
CB750L LTD	1979	———	611-129
CB750SC Nighthawk	82-83	610-123/2	611-129
CB900C Custom	1980	610-112	———
CB900C Custom	1981	610-123/2	———
CB900C Custom	1982	610-123/2	610-123
CB900F Super Sport	81-82	610-123/2	610-123
CB1000C Custom	1983	610-123/2	610-123
GL1000 Goldwing	75-77	———	610-108
GL1000 Goldwing	78-79	610-112	610-108

Honda

Model	Year	Front	Rear
GL1000L Goldwing LTD	1976	———	610-108
CBX1000	1979	610-112	610-112
CBX1000	1980	610-112	———
CBX1000	81-82	610-123/2	610-123
CB1100F Super Sport	1983	610-123/2	610-123
GL1100 Goldwing	80-81	610-112	———
GL1100 Goldwing	82-83	610-123/2	610-123
GL1100A Goldwing Aspencade	82-83	610-123/2	610-123
GL1100I Goldwing Interstate	80-81	610-112	———
GL1100I Goldwing Interstate	82-83	610-123/2	610-123
GL1200 Goldwing	1984	610-123/3	610-123/3
GL1200A Goldwing Aspencade	84-87	610-123/3	610-123/3
GL1200I Goldwing Interstate	84-87	610-123/3	610-123/3
GL1200L Goldwing LTD	1985	610-123/3	610-123/3
GL1200SEi Goldwing SEi	1986	610-123/3	610-123/3

Kawasaki

KH250A6 2-Stroke Triple	1976	———	611-404
S1A/S1B/S1C-250 2-Stroke	73-75	———	611-404
S2-350 2-Stroke Triple	1972	———	611-404
S2-350 2-Stroke Triple	1973	610-301	611-404
KH400A3/A4/A5 2-Stroke Triple	76-78	610-414	611-404
S3/A-400 2-Stroke Triple	74-75	610-301	611-404
H1/A/C-500 Mach III	69-72	———	611-420
H1B-500 (disc brake model)	1972	610-301	611-420
H1D/H1E/H1F-500	73-75	610-301	———
KH500A8	1976	610-414	———
KZ550A1	1980	610-414	611-412
KZ550A2/A3/A4	81-83	610-420/2	611-412
KZ550C1/C2/C3/C4 LTD	80-83	610-420/2	611-412
KZ550D1 GPz	1981	610-420	610-420/2
KZ550F1 Spectre	1983	610-420/2	611-412
KZ550F2 LTD	1984	610-420/2	611-412
KZ550H1/H2 GPz	82-83	610-420	610-420/2
KZ550M1 LTD	1983	610-420/2	611-412
ZX550A1/A2/A3 GPz	84-86	610-426	610-426
KZ650B1/B2/B2A/B3	77-79	610-414	611-412
KZ650C1/C2/C3 Custom	77-79	610-414	611-412
KZ650D1/D1A/D2 SR	78-79	610-414	610-306
KZ650E1 LTD	1980	610-414	611-412
KZ650F1	1980	610-414	611-412
KZ650H1/H2/H3 CSR	81-83	610-420/2	611-412
W1-650	66-69	———	611-420
W1SS-650	68-69	———	611-420
W2SS-650 Commander	67-70	———	611-420
W2TT-650 Commander	68-70	———	611-420
KZ700A1	1984	610-420	610-420/2
VN700A1 Vulcan	1985	610-426	611-412
ZN700A1/A2 LTD	84-85	610-426	610-426
H2/A/B/C-750 Mach IV	72-75	610-301	611-405
KZ750B1/B2/B3/B4 (2-cyl.)	76-79	610-414	611-412
KZ750E1/E2/E3	80-82	610-420	610-420/2
KZ750F1 LTD	1983	610-420	610-420/2

Brake Pads & Brake Shoes

Kawasaki

Model	Year	Front	Rear
KZ750G1 LTD (2-cyl.)	1980	610-414	611-412
KZ750H1/H2/H3/H4 LTD	80-83	610-420	610-420/2
KZ750K1/K2 LTD (2-cyl.)	83-84	610-414	611-412
KZ750L3	1983	610-420	610-420/2
KZ750M1 CSR (2-cyl.)	1982	610-420/2	610-412
KZ750N1/N2 Spectre	82-83	610-420	610-420/2
KZ750R1 GPz	1982	610-420	610-420/2
KZ900A4/A5	76-77	610-414	611-405
KZ900B1 LTD	1976	610-414	610-412
Z1/A/B-900	73-75	610-301	611-405
KZ1000A1/A2	77-78	610-414	610-412
KZ1000A3/A3A/A4 MKII	79-80	610-414	610-306/2
KZ1000B1/B2 LTD	77-78	610-414	610-412
KZ1000B3/B4 LTD	79-80	610-414	610-306/2
KZ1000C1/C1A	1978	610-414	610-306
KZ1000C2/C3/C4 Police	79-81	610-414	610-306/2
KZ1000D1 Z1R	1978	610-414	610-306
KZ1000D1 Z1R	1980	610-414	610-306/2
KZ1000E1/E2 Shaft ST	79-80	610-414	610-306/2
KZ1000G1 LTD Classic	1980	610-414	610-306/2
KZ1000J1/J2/J3	81-83	610-420	610-420/2
KZ1000K1/K2 LTD	81-82	610-420	610-420/2
KZ1000M1/M2 CSR	81-82	610-420	610-420/2
KZ1000R1/R2 Replica	82-83	610-420	610-420/2
KZ1100A1/A2/A3 Shaft	81-83	610-420	610-420/2
KZ1100B1/B2 GPz	81-82	610-420	610-420/2
KZ1100D1/D2 Spectre	82-83	610-420	610-420/2
KZ1100L1 LTD	1983	610-420	610-420/2
KZ1300A1/A2/A3/A4	79-82	610-423	610-306/2

Suzuki

GT185L/M/A/B Adventurer	74-77	610-301	611-302
GN250Z/D, GN250F, GN250J	82-88	———	611-302
GT250K Hustler	1973	———	611-305
GT250L/M/A/B Hustler	74-77	610-301	611-305
T3501/2/R/J	69-72	611-304	611-305
GT380J Sebring	1972	611-304	611-305
GT380K/L/M/A/B (Tokico caliper)	73-77	610-301	611-305
GT380B (Asco caliper)	1977	610-320	611-305
GS400B/C (w/front disc)	77-78	610-318	611-305
GS400XB/XC (w/front drum)	77-78	———	611-305
GS425N/EN	1979	610-318	611-308
GT500A/B Titan	76-77	610-301	611-305
RE5M/RE5MA Rotary	75-76	610-301	611-306
T5001/2/3	68-70	———	611-305
T500R/J/K/L/M Titan	71-75	———	611-305
GT550J Indy	1972	———	611-305
GT550K/L/M Indy	73-75	610-301	611-305
GT550A/B (Tokico caliper)	76-77	610-301	611-307
GT550B (Asco caliper)	1977	610-320	611-307
GS750B/C/EC/N/EN	77-79	610-318	610-306
GT750K/L/M/A/B Lemans	73-77	610-301	611-306
GS850GN	1979	610-318	610-306
GS850GT/GLT-GD/GLD	80-83	610-322	610-306
GS1000C/EC/N/EN/ET	78-80	———	611-306
GS1000GT/GLT/GX/GLX	80-81	610-322	610-306
GS1000LN/SN	1979	———	611-306
GS1000ST	1980	610-324	610-306
GS1000SZ Katana	1982	610-324	610-306
GS1100ET-ESD	80-83	610-324	610-306
GS1100GZ-GLD	82-83	610-322	610-306
GS1100GKZ-GKD	82-84	610-322	610-306
GS1100LT	1980	610-324	610-306
GS1100SD Katana	1983	610-324	610-306
GS1150ES3-ESG	83-86	610-331	610-331

Yamaha

Model	Year	Front	Rear
RD200A/B	74-75	611-206	611-228
RD200C	1976	———	611-228
SR250G/H/TH/J Exciter	80-82	611-220	611-223
RD350/A/B	73-75	610-204	611-225
RZ350L/LC/N/NC	84-85	610-235	610-236
XS360C/D/2D	76-77	610-205	611-231
RD400C/D/E	76-78	610-204	610-204
RD400F	1979	610-215	610-215
XS400D/E/F	77-79	610-205	610-205
XS4002E/2F	78-79	611-206	611-231
XS400G/H Special	80-81	611-206	611-231
XS400J/K Maxim	82-83	610-235	611-231
XS400RJ/RK Seca	82-83	610-235	611-231
XS400SG/SH Special	80-81	610-215	611-231
XS400SJ Special	1982	611-206	611-231
SR500E/F	78-79	610-205	610-205
SR500G/H	80-81	610-205	611-228
TX500/A & XS500B	73-75	610-204	611-227
XS500C/D/E	76-78	610-205	610-205
XJ550H/J/K Maxim	81-83	610-228	611-227
XJ550RH/RJ/RK Seca	81-83	610-228	611-231
XZ550RJ/RK Vision	82-83	610-235	611-227
FJ600L/LC/N/NC	84-85	610-236	610-236
SRX600S/SC	1986	610-240	610-240
YX600 Radian	86-90	610-236	611-227
XJ650G/H/J/K Maxim	80-83	610-216	611-227
XJ650LH Midnight Maxim	1981	610-216	611-227
XJ650LJ/LK Turbo	82-83	610-216	611-227
XJ650RJ Seca	1982	610-205	611-230
XS1/XS1B-650	70-71	———	611-225
XS2-650	1972	610-204	611-225
TX650/A	73-74	610-204	611-225
XS650B/C	75-76	610-204	611-225
XS650D/E/F/2F	77-79	610-205	611-225
XS650G/H Special II	80-81	610-205	611-225
XS650SE/SF/SG Special	78-80	610-205	610-205
XS650SH Special	1981	610-205	611-225
XS650SJ/SK Heritage Special	82-83	610-205	611-225
FZ700T/TC	1987	610-236	610-236
FZX700 Fazer	86-87	610-236	610-236
XJ700 Maxim & Maxim X	85-86	610-236	611-230
XV700CS/CSC/CT/CTC	86-87	610-236	611-230
XV700L/LC-T/TC Virago	84-87	610-236	611-230
FZ750N/S/SC & FZ750U/UC	85-86, 1988	610-236	610-236
FZR750RT/RU	87-88	610-242/2	610-236
TX750/A	73-74	610-204	611-230
XJ750J/K/MK Maxim	82-83	610-235	611-230
XJ750RH/RJ/RK Seca	81-823	610-228	611-230
XS750D/2D/E/F	77-79	610-205	610-205
XS750SE/SF Special	78-79	610-216-L	610-205
		610-215-R	———
XV750H/J/K/MK Virago	81-83	610-216	611-227
XS850G/H	80-81	610-205	610-205
XS850LG/LH Midnight Special	80-81	610-216-L	610-215
		610-215-R	———
XS850SG/SH Special	80-81	610-216-L	610-215
		610-215-R	———
XJ900RK Seca	1983	610-236	610-236
XV920J Virago	1982	610-228	611-230
XV920K/MK Virago	1983	610-216	611-230
XV920RH/RJ	81-82	610-205	611-230
XS1100E/F/G/H	78-81	610-205	610-205
XS1100LG Midnight Special	1980	610-216-L	610-205
		610-215-R	———

Master Cylinder Rebuild Kits & Diaphragms

850-100

850-300

Master Cylinder Rebuild Kits

Complete kits contain all necessary components to rebuild one OEM master cylinder. ***Made in Japan***.

Honda Street

Model	Year	Front	Rear
CB400F Super Sport	75-77	850-103	—
CB750F Super Sport	75-76	850-103	—
CB750K0/K1/K2/K3/K4/K5/K	69-76	850-103	—

Kawasaki Street

S2/S2A-350 Match II 2-stroke triple	72-73	850-100	—
KH40A3/A4 2-stroke triple	76-77	850-100	—
KZ4000A1-A2	77-78	850-100	—
KZ400/D/D3/D4	74-77	850-100	—
S3/S3A-400 2-stroke triple	74-75	850-100	—
H1B-500 2-stroke triple	1972	850-100	—
H1D/H1E-500 2-stroke triple	73-74	850-100	—
H1F-500 2-stroke triple	1975	850-100	—
KH500A8 2-stroke triple	1976	850-100	—
KZ650B1	1977	850-100	—
H2/H2A/H2B/H2C-750 Mach V	72-75	850-100	—
KZ750B1/B2 2-cylinder	76-77	850-100	—
KZ900A4/A5	76-77	850-100	—
Z1/Z1A/Z1B-900	73-75	850-100	—
KZ1000A1	1977	850-100	—

Yamaha Street

RZ350L/N/NC/NCII	84-85	850-133	850-144
XZ550RK Vision	1983	850-133	—
XJ650LJ/LK Seca Turbo	82-83	850-133	—
XJ650RJ Seca	1982	850-133	—
XS6502F	1979	850-106	—
XS650SE/SF	78-79	850-106	—
XS650G/H	80-81	850-106	—
XS650SH	1981	850-106	—
XS650SK/SJ Heritage Special	82-83	850-106	—
XJ700N/NC/S/SC Maxim	85-86	850-133	—
XJ700XN/XNC/XS/XSC Maxim	85-86	850-133	—
XV700L/LC/N/NC Virago	84-85	850-133	—
XV700CS/CSC/CT/CTC Virago	86-87	850-133	—
XV700SS/SSC Virago	1986	850-133	—
XJ750J/K Maxim	82-83	850-133	—
XJ750MK Midnight Maxim	1983	850-133	—
XS750E/F	78-79	850-106	—
XS750SE/SF Special	78-79	850-106	—
XV750U/UC-H/HC Virago	88-96	850-133	—
XV750H1/H1C/J1/J1C Virago	96-97	850-133	—
XS850G/H	80-81	850-106	—
XS850LG/LH Midnight Special	80-81	850-106	—
XS850SG/SH Special	80-81	850-106	—
XJ900RK Seca	1983	850-133	—
XV920J Virago	1982	850-133	—
XV920RH/RJ	81-82	850-133	—
XS1100E/F/G/H	78-81	850-106	—
XS1100LG Midnight Special	1979	850-106	—
XS1100SF/SG/SH Special	79-81	850-106	—

Master Cylinder Diaphragms NEW

Available for early vintage model Kawasaki master cylinders. Sold each. ***Made in Japan***.

Kawasaki Street

Model	Year	Front	Rear
S2A-350 Mach II 2-stroke triple	1973	850-300	—
KH400A3/A4 2-stroke triple	76-77	850-300	—
KH400A5 2-stroke triple	1978	—	—
KZ400A1/A2	77-78	850-300	—
KZ400B1/B2	74-77	—	—
KZ400/D/D3/D4	74-77	850-300	—
H1B-500 2-stroke triple	1972	850-300	—
H1D/H1E/H1500 2-stroke triple	73-75	850-300	—
KH500A8 2-stroke triple	1976	850-300	—
KZ650B1	1977	850-300	—
KZ650B2/B2A/B3	78-79	—	—
KZ650C1 Custom	1977	850-300	850-300
KZ650C2/C3 Custom	78-79	—	850-300
KZ650D1/D1A/D2 SR	78-79	—	850-300
H2/H2A/H2B/H2C-750 Mach V	72-75	850-300	—
KZ750B1/B2 2-cylinder	76-77	850-300	850-300
KZ750B3/B4 2-cylinder	78-79	—	850-300
Z1/Z1A/Z1B-900	73-75	850-300	—
KZ900A4/A5	76-77	850-300	—
KZ900B1	1976	850-300	850-300
KZ1000A1	1977	850-300	850-300
KZ1000A2/A2A	1978	—	850-300
KZ1000A3A3A/A4 MKII	79-80	—	850-300
KZ1000B1 LTD	1977	850-300	850-300
KZ1000B2/B3 LTD	78-79	—	850-300
KZ1000B4 LTD	1980	—	—
KZ1000C1/C1A/C2/C3 Police	78-80	—	850-300
KZ1000D1 Z1R	1978	—	850-300
KZ1000E1 Shaft ST	1979	—	850-300

Master Cylinder Snap-Ring Pliers

Allows removal of internal snap rings used in hydraulic master cylinders. Replaces Honda 07914-SA50001. Can be used to remove and replace small to medium internal snap rings up to 50mm deep, including those used for transmission gear locating, bearing retention, and oil seal retention. Applicable to some fork seal retaining rings.

Order No. 950-775

Brake Caliper Pistons & Shocks

603-004

603-003

Sudco Brake Caliper Pistons

Replacement brake caliper pistons for Honda. Sold each. ***Made in Japan.*** Qt. listed is for all calipers on model. Order per Sudco part number and qt needed for replacement.

Honda

45107-MA3-006 Front Piston **Order No. 603-004**	Year	Qt
CB400T Hawk	1981	2
CM400C Custom	1981	2
CB450SC Nighthawk	1986	2
CMX450C Rebel	86-87	2
CX500C Custom	1982	2
CX500TC Turbo	1982	4
FT500 Ascot	82-83	2
GB500	89-90	2
GL500 Silverwing	81-82	2
GL500I Silverwing Interstate	81-82	4
VF500F Interceptor	84-86	4
XL600V Transalp	89-90	2
CB650SC Nighthawk	83-85	4
GL650 Silver Wing	1983	4
GL650I Silver Wing Interstate	1983	4
VF700C Magna	84-86	4
VF700C Magna	1987	2
VF700S Sabre	84-85	4
CB750C Custom	1982	2
CB750F Super Sport	81-82	4
CB750SC Nighthawk	82-83	4
VF750C V45 Magna	82-83	4
VF750C V45 Magna	1988	2
VF750S Sabre	82-83	4
VT800C Shadow	1988	2
CB900C Custom	1982	4
CB900F Super Sport	81-82	4
CB1000C Custom	1983	4
CBX	81-82	4
CB1100F Super Sport	1983	4
GL1100 Goldwing	1982	4
GL1100A Goldwing Aspencade	1982	4
GL1100I Goldwing Interstate	1982	4
VT1100C Shadow	85-86	4
VT1100C Shadow	87-90	2
VT1100C Shadow	92-93	2

Honda

43107-MA7-006 Front Piston	**Order No. 603-003**	Qt.
VF500 C Magna	84-85	2
VT500C Shadow	83-86	2
VT500FT Ascot	83-84	2
CB550SC Nighthawk	1983	2
CX650C Custom	1983	2
CX650T Turbo	1983	4
CB700SC Nighthawk	84-86	4
VF700F Interceptor	84-85	4
VT700C Shadow	86-87	2
VF750F Interceptor	83-84	4
VF1000F Interceptor	1984	4
VF1000	86-87	4
VF1100C V65 Magna	83-86	4
VF1100S V65 Sabre	84-85	4
45107-415-006 Front Piston	**Order No. 603-001**	Qt
CX500	78-79	1
CX500C Custom	79-81	1
CX500D Deluxe	79-81	1
CB900C Custom	1981	2
CBX	79-80	2
GL1000 Goldwing	1979	2
GL1100 Goldwing	80-81	2
GL1100I Goldwing Interstate	80-81	2
45107-410-006 Front Piston	**Order No. 603-002**	Qt
CB750F Super Sport	77-78	2
CB750F Super Sport	79-80	2
CB900C Custom (2)	1980	2
GL1000 Goldwing	1978	2
43205-371-006 Rear Piston	**Order No. 603-005**	Qt
CB750F Super Sport	75-76	1
GL1000 Goldwing	75-77	1
GL1000LGoldwing LTD	1976	1

Chrome Rear Shocks for H1-500 & H2-750

Reproductions of the original shocks fit Kawasaki H2-750 1972-75, and H1-500 1969-76 models, are all chrome with a gray plastic sleeve inside the spring to protect the damper rod. Extended length is 325mm from eye to eye. Top bush is 14mm, bottom bush 10mm. Sold in pairs.

Kawasaki

Model	Year	Description	Order No.
H1-500	69-76	Chrome Shocks	500-602
H2-750	72-75	Chrome Shocks	500-602

900-175

Chrome Rear Shocks for Z1/KZ900 & KZ1000

Reproduction of the original, early Z1-900 shocks and KZ900/1000. Chrome shock covers with reflectors and without. Sold in pairs.

Kawasaki

Model	Year	Description	Order No.
Z1/A/B-900	73-75	Chrome Shocks with reflector	900-175
KZ900A4/A5	76-77	Chrome Shocks no reflector	500-600
KZ1000		Chrome Shocks no reflector	500-600

Z1/KZ900 Brake Pedal

Fits Z1/A/B-900 and KZ900. Brake Petal only.
Sold each.
Order No. 951-070

Z1/KZ900 Brake Rod

Reproduction rear brake rod for Z1/KZ900 models. Bright zinc finish.
Sold each.
Order No. 901-325

717-011

Z1-900 Foot Rest (Foot Pegs)

Replica of the stock rubber foot rest. Z1/A/B-900 (73-75) and other Kawasaki vintage models. Mounting hardware not included. Sold in pairs.

Description		Order No.
Rider	Footrest	717-011
Passenger	Footrest	717-010

Z1/KZ 900/1000 Shift Lever

Shift Lever with rubber tip. Sold each.

Order No. 951-080

Kawasaki

Model	Year
KZ900A4/A5	76-77
KZ900B1 LTD	1976
Z1/A/B-900	73-75
KZ1000A1/A2	77-78
KZ1000A3/A3A/A4 MKII	79-80
KZ1000B1/B2/B3/B4 LTD	77-80
KZ1000D1 Z1R	1978
KZ1000D3 Z1R	1980
KZ1000G1 LTD Classic	1980
KZ1000J1/J2/J3	81-83
KZ1000K1/K2 LTD	81-82
KZ1000M1/M2 CSR	81-82

Front Fender Washers

Front fender washers for: H1B, H2-750, S2, S1A/B/C, KH250-A5.
Sold pack of 10.

Order No. 901-300

PC Racing Shifter Skins

The PC Racing Shifter skin protects your shoes from ugly shifter marks

- Made from durable, washable neoprene
- Shifter skin provides easier shifting
- Fits most bikes
- Slides on in seconds

Color		Order No.
Black	PCSSBLACK	945-120
Gray	PCSSGREY	945-121

Frame Parts & Disc Brake Rotor

Z1-900 Side Stand

Replica of the stock Kawasaki Z1-900 side stand. Fits Z1/A/B-900 from 1973-1975 and KZ900A4 1976. Mounting hardware and spring included. Sold each.

Order No. 900-475

Kawasaki Side Stand Bolt & Nut Set

2 piece set includes bolts and nut.
Fits Kawasaki H2-750.

Order No. 901-335

900-600

900-601

900-607

900-6011

Kawasaki Grabrails

Replica of the stock grabrail. Sold each.

Kawasaki

Model	Year	Notes	Order No.
H1/A/B/C	69-71	Lift Handle	900-602
H1/A/B/C	69-71	Rear Handle	900-607
H2/A/B/C-750 Mach IV	72-73	Lift Handle	900-604
H2/A/B/C-750 Mach IV	72-73	Rear Handle	900-601
Z1/A/B-900	73-75	Rear Handle	900-600
KZ1000A3/A3A/A4 MKII	79-80	Side Handle	900-603
Mushroom Plugs for 900-601			900-6011

900-603

900-602

Front Wheel Dust Cover Screw Kit

Fits Kawasaki H1-500 72-75, H2-750 72-75, KZ900A 76-77 and Z1-900 73-75. Sold set of 3.

Order No. 901-320

901-320

Front Disc Brake Rotor NEW

Replaces OEM Kawasaki 41080-001.
Sold each.

Order No. 331-265

Kawasaki

Model	Year
H1D/H1E/H1F-500	73-75
KH500A8	1976
H2/H2A/H2B/H2C-750	72-75
Z1/Z1A/Z1B-900	73-75

Kawasaki Z1-900B Handlebar Switches

OEM replica of the Z1-900B, KZ900 handlebar switches. Color coded with snap connector. Sold each.

Right Side Handlebar Switch Z1B-900, KZ900A4, KZ900B1 **Order No. 900-157**

This switch has the following functions:
on-off headlight, starter button and kill switch.

Left Side Handlebar Switch Z1B-900, KZ900A4, KZ900B1 **Order No. 900-158**

This switch has the following functions:
hi-low headlight, L-R turn signal and horn.

900-305

Replica Handlebars

Replica of the stock handlebars. Sold each.

Honda

Model	Year	Notes	Order No.
CB400F Super Sport	75-77	stock bend	900-305
CB400F Super Sport	75-76	stock bend	900-306
CB750F	75-76	stock bend	900-307
CB750KO	69-71	stock bend	900-308
CB750K3-K6	73-76	stock bend	900-307
CB750K	1976	stock bend	900-307

** 900-307 will fit 69-72 models K0-K2, the 900-307 are a taller bar than what is stock on those earlier models

Kawasaki

H1/A/B/C	69-71	stock bend	900-312
H2/A/B/C-750 Mach IV	72-75	stock bend	900-314
Z1/A/B-900	73-75	stock bend	900-310
KZ1000A3/A3A/A4 MKII	79-80	stock bend	900-311
KZ1000D1 Z1R	1978	stock bend	900-316
KZ1000D3 Z1R	1980	stock bend	900-316

Yamaha

XS650/1100	900-300

Honda CB750K0 Chrome Mirror

Replica of the stock early model CB750 mirror.
Chrome finish. Sold each.

Description	Order No.
CB750K0 Mirror	716-065

716-061

Kawasaki Z1 Mirrors

Replica of the stock Z1 mirror. Black finish.
Available in long stem or short stem. Sold each.

Description	Order No.
Short Stem Mirror	716-061
Long Stem Mirror	716-060

Kawasaki Handlebar Mount Bolt Kit

Eight piece kit includes bolts and lock washers.
Fits Kawasaki Z1-900, W1-650, H2-750, KZ1300.

Order No. 900-325

Control Meter Parts

950-480

950-481

Kawasaki Z1-900 Indicator Panel Decal

OEM replica. Made of plastic. Sold each.

Description	Order No.
Fits Z1-900 (1973)	950-480
Fits Z1A/B-900 (74-75)	950-481

Kawasaki Z1-900 Indicator Lamp Cover Set

OEM replica. Made of plastic. Includes upper cover and lower cover. Sold as a set.

Description	Order No.
Fits Z1-900 (1973)	900-171
Fits Z1A/B-900 (74-75)	900-170

951-010

951-001

Kawasaki H2-750 Rubber Meter Cover

Kawasaki H2-750 Rubber Meter Cover fits speedometer and tachometer. Sold Each. **Meter not included.**

Order No. 900-180

Kawasaki KZ Chrome Gauge Covers

Top and bottom covers for instrument gauges.
Kawasaki vintage models, KZ650/750/900/1000. Sold in pairs.

Description	Order No.
Top	951-010
Bottom	951-001

H1-500 Speedometer & Tachometer NEW

OEM replica. Fits Kawasaki H1-500 1969-1971. Sold each.

Description	Order No.
Speedometer MPH	951-105
Speedometer KM	951-106
Tachometer	951-100

Instrument Gauge Brackets NEW

OEM replica. Two brackets available, Kawasaki Z1/Z1A/Z1B-900 1973-1975 and KZ900/KZ1000 1976-1980. Sold each.

Description	Order No.
Z1/Z1A/Z1B-900 OEM Ref. 25008-024	951-015
KZ900/KZ1000 OEM Ref. 25000-039	951-016

Control Levers

OEM type replacements for Kawasaki and Yamaha vintage applications. Sold each.

Kawasaki Street

Model	Year	Brake	Clutch
KZ400A1/A2	77-78	628-060	———
KZ400/D/D3/D4	74-77	628-060	———
S3/S3A-400 (2-stroke triple)	74-75	628-060	628-160
KH400A3/A4/A5 (2-stroke triple)	76-78	628-060	———
H1D/E/F-500 (2-stroke triple)	73-75	628-060	628-160
KZ650B1/B2/B2A/B3	77-79	628-060	———
KZ650C1/C2 Custom	77-78	628-060	———
H2/A/B/C-750 (2-stroke triple)	72-75	628-060	628-160
KZ750B1/B2 2-Cyl.	76-77	628-060	———
KZ750E1/E2/E3	80-82	628-061	———
Z1/A/B-900	73-75	628-060	628-160
KZ900A4/A5	76-77	628-060	———
KZ1000A1	77	628-060	———
KZ1000A3/A3A/A4 MKII	79-80	———	628-161
KZ1000B1/B2 LTD	77-78	628-060	———
KZ1000E1/E2 Shaft ST	79-80	628-061	———
KZ1000J1/J2	81-82	628-061	628-161
KZ1300A1/A2/A3/A4	79-82	628-061	628-161

Yamaha

DT1-250	628-065	628-165

Grips NEW

Classic Kawasaki OEM style grips for 7/8" handlebars. Replaces 46075-017 left side and 46061-012 right side. Sold in pairs.

Description	Order No.
Open End Grips	733-230
Closed End Grips	733-231

Motion Pro Lever & Perch Assemblies

Available in black or polished for cable operated clutch and brake applications. Inexpensive replacement for Japanese OEM units. Split-perch design holder. Sold as an assembly - lever, lever holder (perch) and cable adjuster. **Not for use with hydraulic brake or clutches.**

Polished

Description	Order No.
Honda Clutch	628-302
Honda Front Brake Cable Type Brake	628-303
Kawasaki/Suzuki/Yamaha Clutch	628-306
Kawasaki/Suzuki/Yamaha Front Brake Cable Type Brake	628-307

Black

Description	Order No.
Honda Clutch	628-300
Honda Front Brake Cable Type Brake	628-301
Kawasaki/Suzuki/Yamaha Clutch	628-304
Kawasaki/Suzuki/Yamaha Front Brake Cable Type Brake	628-305

628-200

Lever Holders (Brackets)

Split perch lever holders with adjuster nut and bolt. Yamaha vintage applications. Sold each.

Description	Order No.
Clutch	628-201
Front Brake Cable Type Brake	628-200

Z1 Clutch Cable Adjuster

Description	Order No.
Clutch cable adjuster screw & washer	901-340

Sold as set.

H2 Starter Plunger Cap

Starter Plunger Cap fits Kawasaki F11, S2, S3, H1, and H2. Sold each.

Description	Order No.
Starter Plunger Cap	009-110

Control Cables

657-658

655-066

Control Cables for Vintage Models
(reference chart)

Stock replacement cables. Sudco offers cables from ***Japan*** (OEM) and Motion Pro. Sold each. Model listing begins on next page.

Honda

Description	OEM Reference	Mfg.	Notes	Order No.
Clutch	22870-268-821	Japan	Gray	655-066
Clutch		Motion Pro	Black	655-071
Front Brake	45450-281-000	Japan	Gray	604-066
Speedometer		Motion Pro	Black	652-071
Tachometer		Motion Pro	Black	653-071
Throttle		Japan	Gray	657-066
Throttle (pull)		Motion Pro	Black	657-080A
Throttle (push)		Motion Pro	Black	657-080B

Kawasaki

Choke	54017-031	Japan	Gray	653-658
Choke		Motion Pro	Black	653-659
Clutch	54011-030	Japan	Gray	655-658
Clutch	54011-030	Japan	Black	655-658B
Clutch	54011-036	Japan	Black	655-660
Clutch	54011-039	Japan	Black	655-638
Clutch	54011-039	Japan	Gray	655-638G
Clutch	54011-045	Japan	Black	655-661
Clutch	54011-053	Japan	Black	655-663
Clutch		Motion Pro	Black	655-635
Clutch		Motion Pro	Black	655-636
Clutch		Motion Pro	Black	655-637
Front Brake	54005-040	Taiwan	Gray	604-658
Speedometer		Motion Pro	Gray	652-603
Speedometer	54001-030	Japan	Black	652-606
Speedometer	54001-036	Japan	Black	652-604
Speedometer	54001-041	Japan	Black	652-610
Speedometer	54001-043	Japan	Black	652-612
Speedometer	54001-050	Japan	Black	652-607
Speedometer		Motion Pro	Black	652-602
Speedometer		Motion Pro	Black	652-601
Tachometer		Motion Pro	Black	653-601
Tachometer	54018-007	Motion Pro	Gray	653-603
Tachometer	54018-011	Japan	Black	653-604
Tachometer	54018-013	Japan	Black	653-606
Throttle		Motion Pro	Black	657-641
Throttle		Motion Pro	Black	657-659
Throttle	54012-097	Japan	Black	657-663
Throttle	54012-054	Japan	Gray	657-658
Throttle		Motion Pro	Black	657-640
Rear Brake		Motion Pro	Gray	604-665

Suzuki

Description	OEM Reference	Mfg.	Notes	Order No.
Throttle	58300-33001	Motion Pro	Black	021-962

Yamaha

Clutch	214-26335-00	Japan	Gray	655-260
	1A0-26335-10			
Front Brake	214-26341-00	Japan	Gray	604-260
Oil Pump	214-26321-00	Japan	Gray	653-260
Speedometer	214-83550-00	Japan	Gray	652-260
Tachometer	214-83560-00	Japan	Gray	653-265
Throttle 1	214-26311-00	Japan	Gray	657-260
Throttle 2	214-26312-00	Japan	Gray	657-261
Throttle	XS650 70-79	Motion Pro	Black	021-960

021-960 - Fits Stock throttle to Mikuni VM34 carburetors.

Motion Pro Cable Luber

Use to inject lubricant into cable housing. Clamps over cable housing allowing an aerosol can tip to be connected for injection inside. Once the lubricant runs out of far end, the cable is lubricated. Sold each.

Order No. 950-447

PJ1 Cable Lube

Lubricant for control cables

- Extends cable life
- Cleans and lubricates
- Makes cable pull easier Sold in 11 fl. oz. aerosol can.

Order No. 899-190

652-071

653-601

Control Cables for Vintage Models (application chart)

Stock replacement cables. Sudco offers cables from ***Japan*** (OEM) and Motion Pro. Sold each.

Honda

Model	Year	Throttle Set	Throttle Push	Throttle Pull	Choke	Tach	Speedo	Clutch	Front Brake	Rear Brake
CB72 Hawk 305	61-66	657-066	—	—	—	—	—	655-066	604-066	—
CB77 Super Hawk 305	61-68	657-066	—	—	—	—	—	655-066	604-066	—
CB350F Super Sport	72-74	—	—	—	—	—	652-071	—	—	—
CB400F Super Sport	75-77	—	—	—	—	—	652-071	—	—	—
CB500K0/K1/K2	71-73	—	657-080B	657-080A	—	—	652-071	—	—	—
CB550F Super Sport	75-77	—	657-080B	657-080A	—	—	652-071	655-071	—	—
CB550K0/K1	74-75	—	657-080B	657-080A	—	653-071	652-071	655-071	—	—
CB550K	76-78	—	657-080B	657-080A	—	653-071	652-071	655-071	—	—
CB650C Custom	80-81	—	—	—	—	653-071	652-071	—	—	—
CB750F Super Sport	75-76	—	657-080B	657-080A	—	653-071	652-071	655-071	—	—
CB750F Super Sport	77-78	—	—	—	—	—	652-071	655-071	—	—
CB750F Super Sport	79-82	—	—	—	—	—	652-071	—	—	—
CB750K0	1969	—	—	—	—	653-071	652-071	655-071	—	—
CB750K1-K5	70-75	—	657-080B	657-080A	—	653-071	652-071	655-071	—	—
CB750K	1976	—	657-080B	657-080A	—	653-071	652-071	655-071	—	—
CB750K	77-78	—	—	—	—	653-071	652-071	655-071	—	—
CB900F Super Sport	81-82	—	—	—	—	—	652-071	—	—	—
CBX1000 Super Sport	79-82	—	—	—	—	—	652-071	—	—	—

Kawasaki

F8/F8A-250 Enduro	71-72	—	—	—	—	—	652-606	655-660	—	—
F81M-250 (Offroad MX)	1971	—	—	—	—	—	—	655-660	—	—
KH250A5	1976	657-663	—	—	—	—	—	655-663	—	—
S1A-250 2-stroke triple	1973	—	—	—	—	—	—	655-663	—	—
S1B/S1C-250 2-stroke triple	74-75	657-663	—	—	—	—	—	655-663	—	—
F5/F5A-350 Bighorn	70-71	—	—	—	—	—	652-606	655-660	—	—
F9/F9A-350	72-73	—	—	—	—	653-606	652-606	655-661	—	—
F9B/F9C-350	74-75	—	—	—	—	653-606	652-607	655-661	—	—
S2-350 2-stroke triple	1972	—	—	—	—	—	—	655-663	—	—
S2A-350 2-stroke triple	1973	—	—	—	—	—	652-610	655-663	—	—
KH400A3/A4/A5 2-stroke triple	76-78	657-663	—	—	—	—	652-610	655-663	—	—
S3/S3A-400 2-stroke triple	74-75	657-663	—	—	—	—	652-610	655-663	—	—
KH400A3/A4/A5 2-stroke triple	76-78	657-663	—	—	—	—	652-610	655-663	—	—
H1/A-500 Mach III	69-71	657-658	—	—	653-658	653-603	652-603	655-658**	604-658	604-665
H1B-500 (Disc Brake)	1972	—	—	—	—	—	652-604	—	—	604-665
H1C-500 (Drum Brake)	1972	657-658	—	—	653-658	653-603	652-603	655-658**	604-658	604-665
H1D/H1E/H1F-500	73-75	—	—	—	—	—	652-612	—	—	—
KH500A8 (2-stroke triple)	1976	—	—	—	—	—	652-612	—	—	—
KZ650B3	1979	—	657-640	657-640	—	653-601	652-601	655-637	—	—
H2/H2A-750 Mach IV	72-73	657-659	—	—	653-659	653-604	652-604	655-638	—	—
H2B/H2C-750 Mach IV	74-75	657-659	—	—	—	653-604	652-612	655-638	—	—
KZ900A4/A5	76-77	—	657-640	657-640	—	653-601	652-601	655-635	—	—
KZ900B1 LTD	1976	—	—	—	—	653-601	—	655-637	—	—

** Clutch cable also available in black order number **655-658B**

Control Cables

Kawasaki (cont.)

Model	Year	Throttle Set	Throttle Push	Throttle Pull	Choke	Tach	Speedo	Clutch	Front Brake	Rear Brake
Z1/A/B-900	73-75	—	657-640	657-640	—	653-601	652-601	655-635	—	—
KZ1000A1	1977	—	657-640	657-640	—	653-601	652-601	655-635	—	—
KZ1000A2/A2A	1978	—	657-640	657-640	—	653-601	—	655-635	—	—
KZ1000A3/A3A/A4 MKII	79-80	—	657-640	657-640	—	653-601	652-601	655-637	—	—
KZ1000B1/B2/B3/B4 LTD	77-80	—	—	—	—	653-601	—	655-637	—	—
KZ1000D1 Z1R	1978	—	—	—	—	—	652-601	655-636	—	—
KZ1000D3 Z1R	1980	—	—	—	—	—	—	—	—	—
KZ1000E1/E2 Shaft ST	79-80	—	657-640	657-640	—	—	652-602	655-637	—	—
KZ1000G1 LTD Classic	1980	—	—	—	—	653-601	—	—	—	—
KZ1000J1/J2	81-82	—	—	657-641	—	—	652-602	655-637	—	—
KZ1000J3 (Canada model)	1983	—	—	—	—	—	652-602	655-637	—	—
KZ1000R1/R2 Replica	82-83	—	—	—	—	—	—	655-636	—	—
KZ1100A1/A2/A3 Shaft	81-83	—	—	—	—	—	—	655-637	—	—

Suzuki

GT380J/K Lemans	72-73	021-962	—	—	—	—	—	—	—	—

Control Cables for Vintage Yamaha

Stock replacement cables. ***Made in Japan*** (OEM) Sold each.

657-260

Yamaha

Description	OEM Reference	Mfg.	Notes	Order No.
Clutch	214-26335-00 1A0-26335-10	Japan	Gray	655-260
Front Brake	214-26341-00	Japan	Gray	604-260
Oil Pump	214-26321-00	Japan	Gray	653-260
Speedometer	214-83550-00	Japan	Gray	652-260
Tachometer	214-83560-00	Japan	Gray	653-265
Throttle 1	214-26311-00	Japan	Gray	657-260
Throttle 2	214-26312-00	Japan	Gray	657-261
Throttle	XS650 70-79	Motion Pro	Black	021-960

*****XS650 '70-79 (for stock throttle to VM34 Carbs)***

Yamaha Dual Sport (Enduro) & Offroad

Model	Year	Throttle Set	Throttle Top	Throttle Bottom	Oil Pump	Tach	Speedo	Clutch	Front Brake	Rear Brake
DT1/DT1B/DT1C/DT1E-250	68-71	—	657-260	657-261	653-260	653-265	652-260	655-260	604-260	—
DT1CMX/DT1MX-250	70-71	—	657-260	657-261	653-260	653-265	652-260	655-260	604-260	—
DT2/DT3-250 Enduro	72-73	—	657-260	657-261	653-260	653-265	652-260	655-260	604-260	—
RT1/RT1B-360 Enduro	70-71	—	657-260	657-261	653-260	653-265	652-260	655-260	604-260	—
RT1M/RT1MX-360	70-71	—	657-260	657-261	653-260	653-265	652-260	655-260	604-260	—
RT2/RT3-250 Enduro	72-73	—	657-260	657-261	653-260	653-265	652-260	655-260	604-260	—

Motion Pro Vintage Street Throttle Cables

Replacement throttle cables for carburetor and applications listed. Sold each.

Ducati

Model	Throttle	Carburetor	Notes	Order No.
	Stock	Mikuni TM38		021-907
		Mikuni TM38	Choke Cable for TM38	021-906

Enfield

500	Stock	Mikuni VM34		021-947

HARLEY-DAVIDSON®

	Stock	Mikuni VM36-38, TM36-41		657-900
	Stock	Mikuni VM36-38, TM36-41	90° at carb	657-901
	Stock		Universal Cable	653-650

Norton

	Stock	Mikuni VM34 single	MK34/39	007-575
	Stock	Mikuni VM36-38	MK36/39	007-576
	Stock	Mikuni Dual VM32-34	2-into-1	002-025
	M.P. YZF style	Keihin Dual 35H FCR	Push/Pull	021-940

Triumph

TR6/TR7	Stock	Mikuni VM30-34	MK32/43	007-577
T120/T140	Stock	Mikuni VM30-34	MK32/18 (2 cables required, carb to junction box only)	007-578

Yamaha

RD350 (73-75)	M.P. Turbo	Mikuni TM32-41, VM34-38, 2 into 1, some soldering is required		002-025
RZ350 (84-85)		Keihin PJ34-38, PWK28-39		

Spoke & Nipple Kits, Wheel Weights

Sudco Spoke & Nipple Kits

Available for front and rear. Kits include inner/outer spokes and nipples.

Honda

Model	Year	Stainless Front	Stainless Rear	Steel Front	Steel Rear
CB350F/F1 Super Sport	72-74	—	—	900-426	900-427
CB350G Super Sport	1973	—	—	900-426	900-427
CB360	1974	—	—	—	900-427
CB360G	1974	—	—	900-426	900-427
CB360T	75-76	—	—	900-426	900-427
CJ360T	76-77	—	—	—	900-427
CB400F Super Sport	75-77	—	—	900-426	900-427
CB500K0/K1/K2	71-73	—	—	900-424	—
CB500T	75-76	—	—	900-424	—
CB550/K1/K	74-76	—	—	900-424	—
CB750K0/K1/K2/K3	69-73	—	900-412	900-424	900-425
CB750K4/K5	74-75	—	900-412	900-424	900-425
CB750K	76-78	—	900-412	900-424	900-425

Kawasaki

KH250A5	1976	—	—	900-422	900-423
S1A/B/C-250	73-75	—	—	900-422	900-423
S2-350	1972	—	—	900-422	900-423
S2A-350	1973	—	—	900-428	900-423
KZ400A1/A2 Deluxe	77-78	—	—	900-428	900-423
KZ400B1/B2	78-79	—	—	900-428	—
KZ400C1	00-00	—	—	900-422	—
KZ400/D/D3/D4	75-77	—	—	900-428	900-423
KZ400S/S2/S3 Special	75-77	—	—	900-422	900-423
S3/S3A-400	74-75	—	—	900-428	900-423
KH400A3/A4/A5	76-78	—	—	900-428	900-423
KZ440B1/B2	81-82	—	—	900-422	—
H1/A-500	69-71	—	—	900-420	900-421
H1/B-500 (disc brake)	1972	—	—	900-400	900-421
H1D/H1E/H1F-500	73-75	—	—	900-400	—
KH500A8	1976	—	—	—	900-421
H2/A-750	72-73	—	—	900-400	900-410
H2B/C-750	74-75	—	—	900-400	900-410
Z1/A/B-900	73-75	—	—	900-400	900-410
KZ900A4/A5	76-77	—	—	—	900-410

Honda Spoke Wheel Weights

Fits Honda models listed. Sold pk/10. ***Made in Japan.***

Description	OEM Reference	Weight	Order No.
Honda Spoke CB750K	44609-283-000	5 Grams	—
Honda Spoke CB750K	44608-283-000	10 Grams	—
Honda Spoke CB750K	44607-283-000	15 Grams	—
Honda Spoke CB750K	44606-283-000	20 Grams	901-203

Honda

Model	Year
CB125TT	1990
CB250 Nighthawk 250	91-97
CB250 Nighthawk 250	99-03
CMX250C Rebel	85-87
CMX250CD Rebel 250 Limited	1986
CB350F Super Sport (4-cyl.)	73-74
CB350G Super Sport (2-cyl.)	1973
CL350K0/K1-K5 Scrambler	68-73
CB360T	75-76
CJ360T	76-77
CL360K0/K1 Scrambler	74-75
CB400F Super Sport	75-77
CB400T1 Hawk	78-79
CM400E	80-81
CB450D Super Sport	1967
CB450K0/K1-K7 Super Sport	65-74
CL450 Scrambler 450	1967
CL450K1-K6 Scrambler	68-74
CM450E	82-83
CB500K0/K1/K2 (4-cyl.)	71-73
CB500T (2-cyl.)	75-76
CB550F Super Sport	75-77
CB550K0/K1	74-75
CB550K	76-78
CB650	80-82
NX650	88-89
CB750A Automatic	76-77
CB750F Super Sport	75-76
CB750K0-K5	69-75
CB750K (SOHC)	76-78
CB750K (DOHC)	79-82
GL1000 Goldwing	75-77
GL1000L Goldwing LTD	1976

Kawasaki Z1-900 Rear Wheel Damper Set

Kawasaki Reference - 42014-021. Sold as a set. (qt. 6 pieces)

Order No. 900-168

Model	Year
H2B/C-750 Mach IV 2-stroke	74-75
Z1/A/B-900	73-75
KZ900A4/A5	76-77

Seats and Seat Covers

Kawasaki Z1-900 Seat Assembly

OEM style seat with black metal pan similar to the stock version. Sold as a complete unit with hinges and rubber mounts.

Description	Order No.
Seat Assembly	900-100
Seat Cover, Black	900-060
Seat Foam	900-112

900-112

Replacement Seat Foam

OEM style replacement foam for stock seat. Sold each

Honda

Model	Year	Order No.
CB750K2-K6	72-76	900-115

Kawasaki

H1-500	73-75	900-114
KH500	1976	900-114
H2/A-750 Mach IV (2-stroke)	72-73	900-113
Z1/A/B-900	72-76	900-112
KZ1000D1-D3 Z1R	78-80	900-111
KZ1000	77-78	900-112

Kawasaki Reproduction Seat Trim

Reproduction seat trim. Sold in pairs.

Kawasaki

Application	Year	Order No.
S2/S2A-350	72-73	900-107
S3A-400 & KH400	75-77	900-107
H2-750	72-73	900-107

Replacement Seat Covers

OEM style replacement seat covers for stock seat. Sold each.

Honda

Model	Year	Notes	Order No.
CL72 Scrambler 250	62-65	with belt and rivets	900-011
CL77 Scrambler 305	65-68	with belt and rivets	900-011
CB400F Super Sport	75-77	———	900-007
CB750K0	1970	Seat Cover only, no Honda logo	900-001
CB750K1	1971	with logo	900-014
CB750K2-K3	72-73	———	900-012
CB750K4-K6	74-76	———	900-013

Kawasaki

Model	Year	Note	Order No.
S1A-250	1972	———	900-064
KH250	1976	———	900-080
S2A-350 Mach II	1972	———	900-064
KH400	74-75	———	900-080
H1-500 Mach III	1969	with gold trim	900-073G
H1-500 Mach III	1969	with silver trim	900-073S
H1-500 Mach III	70-71	———	900-074
KH500	73-76	———	900-081
H2-750 Mach IV (2-stroke)	1972	———	900-064
KZ900	1976	———	900-083
Z1/A/B-900	73-75	———	900-060
KZ1000A1/A2	77-78	———	900-077
KZ1000D1 Z1R	1978	———	900-062
KZ1000D3 Z1R	1980	———	900-082
KZ1100B1/B2 GPz	81-82	———	900-040
KZ1300A1/A2/A3/A4	79-82	———	900-075

Suzuki

GS400B/XB/C/EC	77-78	———	900-050
GS425N	1979	———	900-050

Seat Belt

55cm long, no buckle. Sold each.

Order No. 900-105

900-162 900-163

Kawasaki Z1-900 Fork Covers

These fork covers are used for mounting the headlight shell onto the fork tubes. Sold each, left and right sides.

Model	Description	Order No.
Early Z1 (1973)	Fork Cover, RH side	900-162
Early Z1 (1973)	Fork Cover, LH side	900-163

Kawasaki H2-750 72-73 Headlight Bracket

Replica of the stock headlight brackets, semi-flat black finish. Sold as a pair. Does not include reflectors.

Order No. 722-575

Kawasaki H2-750 License Plate Bracket

Replica of the stock license plate bracket. Sold each.

Order No. 900-182

Kawasaki H2-750 Tail Inner Plate

Replica of the stock body part. Sold each.

Order No. 900-181

Headlight Parts

721-602

Headlight Shell Assembly

Similar to OEM Kawasaki unit. Complete assembly includes shell, rim & retainer. (Headlight & wiring not included)

Black

Black Headlight Shell (body) with chrome headlight rim/retainer. **Order No.** 721-602
OEM Reference 23005-1016.

Chrome

Chrome Headlight Shell (Body) with chrome Rim/Retainer **Order No.** 721-603

Headlight NEW

7" standard lens headlight includes H-4 Bulb. Sold each.

Order No. 721-605

Headlight NEW

Replica Honda 6 1/4" black metal headlight assembly with chrome rim. Includes the lens and H4 60/55 halogen bulb.
Order No. 721-607

Model	Year
CB650C	80-81
CB650SC Nighthawk	1982
CB750C Custom	81-82
CB750SC Nighthawk	72-73
CB900C Custom	80-82
GL1100 Goldwing	80-83

Kawasaki H1-500 72-73 Headlight Bolts

Chrome finish. Set includes 2 bolts, and 2 washers.

Order No. 901-322

Headlight Rim & Retainer

Chrome finish (rim) includes sealed beam retaining rim, retainer and hardware. Headlight not included. Sold each.

Honda

Rim/Retainer Assembly

OEM Reference 33101-300-673 **Order No.** 722-530
CB750K

Kawasaki

Rim/Retainer Assembly

OEM Reference 23006-038	**Order No.** 721-600
KH500A6 2-stroke triple	1976
KZ550A1/A2/A3/A4	80-83
KZ550C1/C2/C3/C4 LTD	80-83
KZ650B1/B2/B2A/B3	77-79
KZ650C1/C2/C3 Custom	77-79
KZ650D1/D2 SR	78-79
KZ650E1	1980
KZ650F1	1980
KZ650H1/H2/H3 CSR	81-83
KZ750B1/B2/B3/B4/G1 (2 cyl)	77-80
KZ750G1 LTD (2 cyl)	1980
KZ750E1/E2/E3	80-82
KZ750H1/H2/H3/H4 LTD	80-83
KZ750M1 CSR	1982
Z1/A/B-900	73-75
KZ900A4	1976
KZ900B1 LTD	1976
KZ1000A1/A2	77-78
KZ1000A3/A3A/A4 MKII	79-80
KZ1000B1/B2/B3/B4 LTD	77-80
KZ1000E1/E2 Shaft ST	79-80
KZ1000J1/J2/J3	81-83
KZ1000K1/K2	81-82
KZ1000M1/M2	81-82
KZ1100A1/A2 Shaft	81-82

Headlight & Turn Signal Grommet Set

This complete set is used for mounting turn signals on to Kawasaki KZ headlight shell. Set includes rubber grommets and ground collar wire mounts. Turn signals not included. Sold as a set as shown in photo.

Order No. 900-185

Kawasaki Z1-900 Fuel (Gas) Tank

Replica of the stock fuel tank. Fuel Tank only.
Z1/A/B-900 (73-75) model only. Sold each.

Order No. 900-152

Emblems for Kawasaki Z1-900 Fuel (Gas) Tank

Order No. 900-382	Z1-900 (1973)
Order No. 900-381	Z1-900 (1974)

Z1-900 Fuel (Gas) Tank Cap Assembly

OEM replica of the stock cap. Z1/A/B-900 (73-75) model only.
Sold each.

Order No. 900-151

KZ900 Hinged Locking Gas Cap NEW

Fits the following models: KZ200 (78-79), KH250 (1976) KH400 (76-78), H1-D/H1E/H1F-500 (73-75), KZ750 2 cylinder 76-80, KZ900 (76-77).
Sold each.

Order No. 900-147

Kawasaki Rubber Fuel Tank Band

Mounts on to the rear of the fuel tank for applications listed.
Sold each. Available for the following Kawasaki applications.

Kawasaki

Model	Year	OEM Reference	Order No.
F6/A/B-125	71-73	92072-029	900-155
F7-175	1971	92072-029	900-155
S2-350/A	72-73	92072-029	900-155
H2-750	1972	92072-029	900-155
Z1/A/B-900	73-75	92072-042	900-154
KZ900A4	1976	92072-042	900-154
KZ900B1 LTD	1976	92072-042	900-154
KZ1000A1/A2	77-78	92072-042	900-154
KZ1000B1/B2 LTD	77-78	92072-042	900-154
KZ1000D1 Z1R	1978	92072-042	900-154

We cut this gas tank in half and treated half of it with Rustol

Rustol

Rustol gives excellent results with little or no work required. It is safe and non-corrosive to all metals, rubber coatings and paint. While destroying existing rust, it forms a protective bond that prevents new rust from forming later. Rustol is odorless unlike conventional rust removers, and is shipped in a concentrated form. Believe it or not, the same batch of Rustol can be used many times.

Note: Rustol should be diluted according to instructions before use.

Description	Order No.
1 Quart Bottle	800-250
1 Gallon Bottle	800-252
20 liter bottle (bag in a box)	800-253

KAWASAKI

Fuel (Gas) Tank Emblems

OEM replica emblems. Fits stock fuel tank. Mounting hardware not included, use stock hardware. Sold each.

Kawasaki

Model	Year	Description	Order No.
Z1A-900	1974	White Kawasaki letters with black trim	900-381

Body Parts, Decals & Side Cover Emblems

900-712

900-756

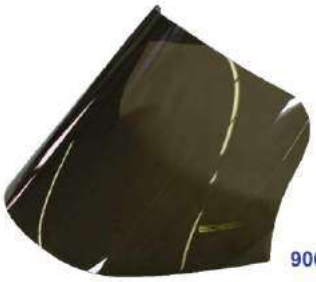

900-501

900-375

900-378

900-380

900-384

Body Parts

Replica of the stock body parts. Not painted. Sold each.

Kawasaki

Description	Order No.
H2-750 2-Stroke Triple 72-73	
Left Side Cover	900-756
Front Fender	900-725
Rear Tail Section	900-675
Chain Guard	900-651
Z1-900/A/B 73-75	
Left Side Cover **(Fiberglass)**	900-752
Left Side Cover **Replica (Plastic)**	900-752A
Right Side Cover **(Fiberglass)**	900-753
Right Side Cover **Replica (Plastic)**	900-753A
KZ1000A3/A3A/A4 MKII 79-80	
Left Side Cover	900-754
Chain Guard	900-653
KZ1000D1 /D3 Z1R 1978 & 1980	
Left Side Cover	900-750
Right Side Cover	900-751
KZ1000R1/R2 Eddie Lawson Replica (ELR) 82-83	
Cowling (Fairing)	900-712
KZ1100B1/B2 GPz 81-82	
Cowling (Fairing)	900-712
Z1000R1/R2 Eddie Lawson Replica (ELR) 82-83	
Windshield, Fits **900-712** cowling.	900-501

Side Cover Emblems

OEM replica emblems. Fits stock side covers..
Mounting hardware not included. Sold in pairs and each as indicated.

Honda

Model	Year	Description	Qt	Order No.
CB750K0		Wing Emblem, Gold with White Wing and Black Honda Letters	Pair	900-378
CB750K0		Wing Emblem, Black with White Wing and Black Honda Letters	Pair	900-379

Kawasaki

H1-500	1969	Mach III 500 Emblem Black and Red Letters	Each	900-375
Z1-900	73-74	900 Double Overhead Camshaft, White Numbers	Pair	900-380
Z1R		White Kawasaki	Each	900-384

(European models) Numbers **(Z1000)** with Red Z1R Letters

Decal Sets for Vintage Japanese Models (For Restoration)

OEM replica decals. Sold in sets for models listed.

Honda

Model	Year	Description	Order No.
CB400F Super Sport	75-77	Red Paint Decal Kit	950-083
CB400F Super Sport	75-77	Side Cover Set	950-084

Kawasaki

F4-250 Sidewinder	1970	Side Cover	950-097
F7-175 Enduro	1971	Decal Kit	950-096
F5-350 Bighorn	1970	Decal Kit	950-094
F5A-350 Bighorn	1971	Decal Kit	950-093
F8-250	1971	Decal Kit	950-095
F9-350 Rotary Valve	1972	Decal Kit	950-092
S2-350	1972	Decal Kit	950-091
H1-500 Mach III	1969	White Oil Tank Decal	950-080
H1-500 Mach III	1969	Gray Oil Tank Decal	950-081
H1-500 Mach III	1969	White Body Decal Kit	950-086
H1-500 Mach III	1970	Red Body Decal Kit	950-087
H2-750 Mach IV	1972	Gold Body Decal Kit	950-088
H2-750 Mach IV	1972	Blue Body Decal Kit	950-089
H2-750 Mach IV	1973	Purple/Gold Body Decal Kit	950-090
KZ1000A3/A3A/A4 MKII	79-80	Decal Kit	950-085

Ignition Coil for Kawasaki & Suzuki

Point type ignition coil for the Kawasaki and Suzuki models listed.
Note: Ignition Coils are not marked 1 & 4 or 2 & 3. Sold each.

Order No. 618-110

Ignition Coil Specifications

Low Tension Wires: 39cm (15") long with female spad connectors at coil and male bullet connectors on the other end.

Spark Plug Wires (HT Leads) : 57.5cm (24") long with a 30cm (12") long protective sheath.

Center to Center Mounting Distance: 90mm between mounting screw holes.

Kawasaki

Model	Year
KZ400A1/A2	77-78
KZ400B1/B2	78-79
KZ400C1	1978
KZ400/D/D3/D3	74-77
KZ400H1 LTD	1979
KZ400S/S2/S3 Special	75-77
KZ440A1	1980
KZ440B1	1980
KZ440D1	1980
KZ650B1/B2/B2A/B3	77-79
KZ650C1/C2/C3 Custom	77-79
KZ650D1/D2 SR	78-79
KZ650E1 LTD	1980
KZ650F1	1980
KZ750B1/B2/B3/B4 (2-cylinder)	76-79
KZ750G1 LTD (2-cylinder)	1980
KZ900A4/A5	76-77
KZ900B1 LTD	1976
Z1/A/B-900	73-75
KZ1000A1/A2	77-78
KZ1000B1/B2/B3 LTD	77-79
KZ1000C1/C1A/C2 Police	78-79

Suzuki

GS550B/C/EC/N	77-79
GS550LN	1979
GS750B/C/EC/N/EN	77-79
GS750LN	1979
GS850GN	1979
GS1000C/EC/N/EN	78-79
GS1000LN	1979
GS1000SN	1979

Ignition Coil Set for Kawasaki H2-750

These OEM style replica high tension coils fit Kawasaki's legendary H2-750 2-stroke triple, 1972-1975. Sold as a complete set of 3 coils, wires, & caps. Kawasaki OEM reference: 21121-064.

Order No. 618-112

Universal 12 Volt Ignition Coil

This Universal 12 volt Ignition Coil comes complete with mounting Bracket. 12 volts, 5.0 ohms.

Order No. 618-114

207-102

207-101

NGK Premium Quality Racing Cables

Available in straight or 90° resistor covers. Sold each.

- Water Resistant, rugged silicone insulation
- High Output stranded copper wire
- 5k ohm ceramic resistor cover for excellent defense against RFI (radio frequency interference)

90° Resistor Covers

Cap Type	Wire Length	Order No.
Removable	50cm (20")	207-101
Removable	100cm (39")	207-104
Solid	50cm (20")	207-103
Solid	100cm (39")	207-105

Straight Resistor Covers

Removable	50cm (20")	207-100
Solid	50cm (20")	207-102

Electronic Ignition

Dyna 2000 Digital Performance

The Dyna 2000 Digital Performance Ignition represents a break through in motorcycle ignition flexibility. The Dyna 2000 system consists of a state-of-the art microprocessor controlled ignition module along with an adjustable Dyna dual sensor crank trigger. For the first time you can actually set the ignition timing to what you want to maximize engine performance. A number of different advance modes and a broad range rev limiter let you tailor the ignition to your needs. **Note:** Sudco part numbers with an asterisk* come with compatible Dyna Ignition coils.

Honda

Application	Year	Dyna No.	Order No.
CB750/900/1100 DOHC (with coils*)	79-82	DDK1-5C	618-861*

Kawasaki

KZ550D1 GPZ (with coils*)	1981	DDK2-3C	618-869*
KZ650B/C/E/F	77-80	DDK2-2	618-867
KZ650B/C/E/F (with coils*)	77-80	DDK2-2C	618-856*
KZ750/ZX750	80-84	DDK2-2	618-867
KZ750/ZX750 (with coils*)	80-84	DDK2-2C	618-856*
Z1-900/KZ900	73-76	DDK2-1	618-865
Z1-900/KZ900 (with coils*)	73-76	DDK2-1C	618-866*
ZX900A1/A2 Ninja 900R	84-85	DDK2-4	618-834
KZ1000/1100	77-85	DDK2-1	618-865
KZ1000/1100 (with coils*)	77-85	DDK2-1C	618-866*
KZ1100 GPz modified	81-84	DDK2-1	618-865
KZ1100 GPz modified (with coils*)	81-84	DDK2-1C	618-866*
ZX1000A1/A2 Ninja 1000R	86-87	DDK2-4	618-834

Suzuki

GS550/750/850	77-81	DSK3-2	618-870
GS1000/1100/1150	77-85	DSK3-2	618-870
GS1000/1100/1150 (with coils*)	77-85	DSK3-2C	618-871*

Yamaha

FJ1100/1200	84-92	DDK7-1	618-845

Boyer Bransden Electronic Ignition

Boyer Bransden ignitions are fully electronic "breakerless" kits and are compatible with positive or negative ground systems. Boyer ignitions are capable of reliable operation up to 10,0000 RPM on most 4-stroke applications. "Reliable As Rock" reputation and virtually maintenance free when installed on a fully functional charging system. Available for the following applications:

Application	Order No.
BSA/Triumph triple	618-902
BSA/Triumph twin (Unit Type Twin)	618-901
BSA/Triumph single (Unit Type Single)	618-903
Norton Twin (Atlas, P11, N15, Commando)	618-900
Yamaha XS650 (70-78)	618-904

Dyna-S Electronic Ignition

The Dyna-S is a complete self-contained electronic ignition built with the latest state-of-the-art engineering. The Dyna S is completely housed behind the ignition cover and uses a magnetic rotor with the original spark advancer, so the factory advance curve is maintained. Tidy, no fuss installation. Recommended DYNA Ignition Coil is listed after Order No.

Ducati

Application	Year	Dyna No.	Order No.	Dyna Ign. Coil
750 Twins	72-74	DS4-1	618-727	618-763

Honda

CB350F/CB400F	72-77	DS1-1	618-720	618-760
CB500/550/750	69-78	DS1-2	618-721	618-750
GL1000	75-79	DS1-3	618-722	618-750

Kawasaki

KZ550/650/750 (4-cyl.)	ALL	DS2-2	618-724	618-750
Z1-900/KZ900 (4-cyl.)	73-76	DS2-1	618-723	618-750
KZ1000/1100 (4-cyl.)	77-85	DS2-1	618-723	618-750

Moto Guzzi

V35/V50/V65	ALL	DS5-1	618-728	618-763

Suzuki

GS550-1100 (4-cyl.)	77-81	DS3-2	618-726	618-750
GS1000/1100 (4-cyl.)	82-83	DS3-2	618-726	618-750

618-901

634-031 Honda XL350

Sudco Ignition (Tune-Up) Kits

These quality ignition kits include contact points and condensers. (No Spark Plugs). Sold as kits for applications listed. Individual parts (each) are also available for models not listed. See Contact Points and Condenser pages. ***Made in Japan.***

Honda Street

Model	Year	Ignition	Ignition Kit
CT70 Trail 70	76-82	Hitachi	634-001
CT70HK0/HK1 Trail 70H	70-73	Hitachi	634-001
CT70HK0/HK1 Trail 70H	70-73	Mitsubishi	634-025
CT70K0 Trail 70	69-71	Hitachi	634-001
CT70K1-K4 Trail 70	72-75	Hitachi	634-001
XL70K0/K1	74-75	Hitachi	634-001
XL70K0/K1	74-75	Mitsubishi	634-025
XL70	1976	Hitachi	634-001
XL70	1976	Mitsubishi	634-025
XL75	77-79	Hitachi	634-001
XL80S	80-85	Hitachi	634-001
CL90 Scrambler 90	67-69	Kokusan	634-011
CL90 Scrambler 90	67-69	ND	634-012
CM91	1969	Kokusan	634-027
CM91	1969	ND	634-028
CT90K0 Trail 90	66-68	Kokusan	634-027
CT90K0 Trail 90	66-68	ND	634-028
CT90K1-K6 Trail 90	69-75	Kokusan	634-027
CT90K1-K6 Trail 90	69-75	ND	634-028
CT90 Trail 90	76-79	Kokusan	634-027
CT90 Trail 90	76-79	ND	634-028
S90 Super 90	64-69	Kokusan	634-011
S90 Super 90	64-69	ND	634-012
CB100K0/K1/K2 Super Sport 100	70-72	ND	634-002
CL100K0/K1/K2 Scrambler 100	70-72	ND	634-002
CL100S Scrambler 100S	1971	ND	634-002
CL100S2/S3 Scrambler 100S	72-73	ND	634-002
SL100K0/K1/K2/K3 Motosport 100	70-73	ND	634-002
XL100K0/K1	74-75	ND	634-002
XL100	76-78	ND	634-002
CB125S/S1/S2	73-75	ND	634-002
CB125S	1976	ND	634-002
CB125S	1978	ND	634-002

Honda Street

Model	Year	Ignition	Ignition Kit
CL125S/S1 Scrambler 125	73-74	ND	634-002
SL125K0/K1/K2 Moto Sport	71-73	ND	634-002
CA175 (CD175) Touring 175	68-69	ND	———
CA175 (CD175)Touring 175	68-69	Hitachi	———
CA175K3 Touring 175	69-70	ND	———
CA175K3 Touring 175	69-70	Hitachi	———
CB175K3-K7 Super Sport	69-73	ND	———
CB175K3-K7 Super Sport	69-73	Hitachi	———
CL175K0/K3-K7 Scrambler	68-73	ND	———
CL175K0/K3-K7 Scrambler	68-73	Hitachi	———
SL175K0/K1 Moto Sport 175	70-72	ND	———
SL175K0/K1 Moto Sport 175	70-72	Hitachi	———
XL175K0/K1/K2	73-75	ND	634-019
The following CL72/CB72/CL77 models use ND ignition. Verify condenser when ordering. See Honda condensers for photos. Points are same for all models.			
CB72 Hawk 250	61-68	ND	———
CB72 Hawk 250	61-68	ND	———
CL72 Scrambler 250	62-65	ND	———
CL72 Scrambler 250	62-65	ND	———
CB77 Super Hawk 305	61-68	ND	———
CB77 Super Hawk 305	61-68	ND	———
CL77 Scrambler 305	65-68	ND	———
CL77 Scrambler 305	65-68	ND	———
CB350G (2-cyl.)	1973	ND	634-005
CB350K0/K1-K4 (2-cyl.)	68-73	ND	634-005
CB350F/F1 Supersport (4-cyl.)	72-74	ND	634-009
CL350K0/K1-K5 Scrambler	68-73	ND	634-005
SL350K0/K1/K2 Moto Sport	69-73	ND	634-005
XL350K0/K1	74-75	ND	634-031
XL350	76-78	ND	634-031
CB360K0	1974	ND	634-006
CB360G	1974	ND	634-006
CB360T	75-76	ND	634-006
CJ360T	76-77	ND	634-006
CL360K0/K1 Scrambler 360	74-75	ND	634-006
CB400F Super Sport	75-77	ND	634-009
CB450K0 Super Sport	65-68	Kokusan	634-007
CB450K1-K7 Super Sport	68-74	Kokusan	634-007
CL450K1-K6 Scrambler	68-74	Kokusan	634-007
CB500/K1/K2 (4-cyl.)	71-73	Hitachi	634-008
CB500T (2-cyl.)	75-76	Kokusan	634-007
CB550F Super Sport	75-77	Hitachi	634-008
CB550K0/K1	74-75	Hitachi	634-008
CB550K	76-78	Hitachi	634-008
CB750A Automatic	76-78	Hitachi	634-008
CB750K0/K1-K5	69-75	Hitachi	634-008
CB750K	76-78	Hitachi	634-008
CB750F Super Sport	75-78	Hitachi	634-008
GL1000 Goldwing	75-79	Kokusan	634-014
GL1000L Goldwing LTD	1975	Kokusan	634-014

Honda ATV

ATC70/K1	73-74	Hitachi	634-001
ATC70	78-85	Hitachi	634-001
ATC90/K1/K2/K3	70-75	ND	634-028
ATC90	76-78	ND	634-028
FL250 Odyssey	78-80	ND	634-037

Ignition Tune-Up Kits

Honda Dual Sport & Offroad

Model	Year	Ignition	Ignition Kit
Z50AK0/AK1-AK6 Mini	68-75	Hitachi	634-001
Z50A	76-78	Hitachi	634-001
Z50R	79-87	Hitachi	634-001
Z50RD Special	1986	Hitachi	634-001
CT70 Trail 70	76-79	Hitachi	634-001
CT70 Trail 70	80-82	Hitachi	634-001
CT70 Trail 70	80-82	ND	———
CT70HK0/HK1	70-73	Hitachi	634-001
CT70HK0/HK1	70-73	Mitsubishi	634-025
CT70K0 Trail 70	69-71	Hitachi	634-001
CT70K1-K4 Trail 70	72-75	Hitachi	634-001
SL70K0/K1 Moto Sport	71-73	Hitachi	634-001
SL70K0/K1 Moto Sport	71-73	Mitsubishi	634-025
XL70K0/K1	74-75	Hitachi	634-001
XL70K0/K1	74-75	Mitsubishi	634-025
XL70	1976	Hitachi	634-001
XL70	1976	Mitsubishi	634-025
XL75	77-79	Hitachi	634-001
XR75K0/K1/K2	73-75	Hitachi	634-001
XR75	1976	Hitachi	634-001
CT90K0 Trail 90	66-68	Kokusan	634-027
CT90K0 Trail 90	66-68	ND	634-028
CT90K1-K6 Trail 90	69-75	Kokusan	634-027
CT90K1-K6 Trail 90	69-75	ND	634-028
CT90 Trail 90	76-79	Kokusan	634-027
CT90 Trail 90	76-79	ND	634-028
SL100K0/K1-K3 Motosport 100	70-73	ND	634-002
XL100K0/K1	74-75	ND	634-002
XL100	76-78	ND	634-002
SL125K0/K1/K2 Moto Sport	71-73	ND	634-002
SL175K0/K1 Motosport 175	70-72	ND	———
SL175K0/K1 Motosport 175	70-72	Hitachi	634-004
XL175K0/K1/K2	73-75	ND	------
CR250M1/M Elsinore	73-76	Kokusan	------
XL250/K1/K2 Moto Sport	72-76	ND	634-031
SL350K0/K1/K2 Moto Sport	69-73	ND	634-005
XL350K0/K1	74-75	ND	634-031
XL350	76-78	ND	634-031

Kawasaki Street

G3SS-90 Bushmaster	69-70	Kokusan	634-603
G3SSA/B/C/D-90	71-74	Kokusan	634-603
G3TR-90 Bushmaster	69-70	Kokusan	634-603
MC1/MC1A/MC1B-90	73-75	Kokusan	634-603
G3SSE-100	1975	Kokusan	634-603
G3TRA-100	1971	Kokusan	634-603
G4TR/G4TRA-100 Trail Boss	70-71	Kokusan	634-603
G4TRB/G4TRC-100	72-73	Kokusan	634-603
G4TRD/G4TRE-100	74-75	Kokusan	634-603
G5/A/B/C-100	72-75	Kokusan	634-603
KH100B7/B8	76-77	Kokusan	634-603
KZ200A1/A1A/A2	78-79	Kokusan	634-617
KH250A5 (2-stroke triple)	1976	Kokusan	634-602
KZ250D1 LTD	1980	Kokusan	634-617
S1A/S1B/S1C-250	73-75	Kokusan	634-602
S2/S2A-350 (2-stroke triple)	72-73	Kokusan	634-602
KZ400A1/A2 Deluxe	77-78	ND	634-609
KZ400B1/B2	78-79	Kokusan	634-615
KZ400C1	1978	Kokusan	634-615
KZ400/D/D3/D4	74-77	ND	634-609
KZ400H1 LTD	1979	Kokusan	634-615
KZ400S/S2/S3 Special	75-77	ND	634-609
S3/S3A-400 (2-stroke triple)	74-75	Kokusan	634-602

Kawasaki Street

Model	Year	Ignition	Ignition Kit
KZ440A1 LTD	1980	Kokusan	634-615
KZ440B1	1980	Kokusan	634-615
KZ440D1 LTD Belt	1980	Kokusan	634-615
H1B-500 (2-stroke triple)	1972	Mitsubishi	634-608
KZ550A1	1980	Kokusan	634-612
KZ650B1/B2/B2A/B3	77-79	Kokusan	634-612
KZ650C1/C2/C3 Custom	77-79	Kokusan	634-612
KZ650D1/D2 SR	78-79	Kokusan	634-612
KZ650E1 LTD	1980	Kokusan	634-612
KZ650F1	1980	Kokusan	634-612
KZ750B1/B2 2-cylinder	76-77	ND	634-609
KZ750B3/B4 2-cylinder	78-79	Kokusan	634-615
KZ750G1 LTD 2-cylinder	1980	Kokusan	634-615
KZ900A4/A5	76-77	Kokusan	634-611
KZ900B1 LTD	1976	Kokusan	634-611
Z-1/A/B-900	73-75	Kokusan	634-611
KZ1000A1/A2/A2A	77-78	Kokusan	634-611
KZ1000B1/B2/B3 LTD	77-79	Kokusan	634-611
KZ1000C1/C1A/C2 Police	78-79	Kokusan	634-611
KZ1000D1 Z1R	1978	Kokusan	634-611

Kawasaki ATV

KLT200A1	1981	Kokusan	634-617

Kawasaki Dual Sport & Offroad

KD80/A2	75-76	Kokusan	634-603
KD80M1-M8	80-88	Kokusan	634-603
MC1/MC1A/MC1B-90 Dual	73-75	Kokusan	634-603
MC1M/MC1M-90	74-75	Kokusan	634-603
G3TR-90 Bushmaster	69-70	Kokusan	634-603
G3TRA-100	1971	Kokusan	634-603
G4TR/G4TRA-100 Trail Boss	70-71	Kokusan	634-603
G4TRB/G4TRD-100	72-73	Kokusan	634-603
G4TRD/G4TRE-100	74-75	Kokusan	634-603
G5/A/B/C-100	72-75	Kokusan	634-603
KD100M1/M2/M3/M4	76-79	Kokusan	634-603
KE100A5-A10	76-81	Kokusan	634-603
KE100B1-B14	82-95	Kokusan	634-603
KM100A1-A7	76-81	Kokusan	634-603
KV100A7	1976	Kokusan	634-603
KD125/A2/A3/A4/A5	75-79	Kokusan	634-603
KE125A3/A4/A5/A6/A7/A8	76-81	Kokusan	634-603
KE125A9/A10	82-83	Kokusan	634-603
KS125/A	74-75	Kokusan	634-603
F8/A-250	71-72	Kokusan	634-606
F11/A/B-250	73-75	Kokusan	634-606
KL250A1/A1A/A2/A3/A4	78-81	Kokusan	634-617

Suzuki Street

AC50R	1971	ND	634-401
AS50R	1971	ND	634-401
MT50R/J/K	71-73	ND	634-401
TS50R	1971	ND	634-401
TS75M/A/B Colt	75-77	ND	634-401
TC90/R/J	70-72	Kokusan	634-501
TC90/R/J	70-72	ND	634-402
TS90/R/J	70-72	Kokusan	634-501
TS90/R/J	70-72	ND	634-402
TC100K/L/M/A/B Blazer	73-77	Kokusan	634-501
TC100K/L/M/A/B Blazer	73-77	ND	634-402
TS100K/L/M/A/B Honcho	73-77	Kokusan	634-501
TS100K/L/M/A/B Honcho	73-77	ND	634-402

Ignition Tune-Up Kits

Suzuki Street

Model	Year	Ignition	Ignition Kit
RV125K/L/M/A/B Tracker	73-77	ND	634-402
TC125J/K/L/M/A/B Prospector	72-77	ND	634-402
TS125R/J/K/L/M/A/B Duster	71-77	ND	634-402
S32-150cc	1968	ND	———
S32-2-150cc	1968	ND	———
GT185K/L/M Adventurer	73-75	ND	———
GT250K/L/M/A/B	73-77	Kokusan	634-504
T305	1969	Kokusan	634-505
TC305	1969	Kokusan	634-505
T350	69-70	Kokusan	634-505
T350R/J	71-72	Kokusan	634-505
GT380J/K/L/M/A/B Sebring	72-77	ND	634-403
GT380J/K/L/M/A/B Sebring	72-77	Kokusan	———
T5001/2/3	68-70	Kokusan	634-505
T500R/J/K/L/M Titan	71-75	Kokusan	634-505
GS550B	1977	ND	634-407
GS550B/C/EC/N/EN	77-79	Kokusan	634-507
GS550LN	1979	Kokusan	634-507
GT550J/K/L/M/A/B Indy	72-77	ND	634-404
GT550J/K/L/M/A/B Indy	72-77	Kokusan	634-503
GS750B	1977	Kokusan	634-507
GS750B/C/EC/N/EN	77-79	ND	634-407
GS750LN	1979	ND	634-407
GT750J/K/L/M/A/B Sebring	72-77	ND	634-404
GS850GN	1979	ND	634-407
GS1000C/EC/N/EN	78-79	ND	634-407
GS1000LN	1979	ND	634-407
GS1000SN	1979	ND	634-407

Suzuki Dual Sport & Offroad

MT50R/J/K	71-73	ND	634-401
TS50R	1971	ND	634-401
TM75L/M/A	74-76	ND	634-401
TS75M/A/B Colt	75-77	ND	634-401
RV90J/K/L/M Rover	72-75	ND	634-401
RV90M/A/B Rover	75-77	ND	634-402
TC90/R/J	70-72	Kokusan	634-501
TC90/R/J	70-72	ND	634-402
TS90/R/J	70-72	Kokusan	634-501
TS90/R/J	70-72	ND	634-402
TC100K/L/M/A/B Blazer	73-77	Kokusan	634-501
TC100K/L/M/A/B Blazer	73-77	ND	634-402
TS100K/L/M/A/B Honcho	73-77	Kokusan	634-501
TS100K/L/M/A/B Honcho	73-77	ND	634-402
RV125K/L/M/A/B Tracker	73-77	ND	634-402
TC125K/L/M/A/B Prospector	73-77	ND	634-402
TS125R/J/K/L/M/A/B Duster	71-77	ND	634-402

Yamaha Street

RD60/A/B	73-75	Hitachi	634-206
U7E-70	1969	Hitachi	634-208
HT1-90	1970	Hitachi	634-206
HT1B-90	1971	Hitachi	634-210
RD250/A/B	73-75	Mitsubishi	634-204
RD350/A/B	73-75	Mitsubishi	634-204
RD400C/D/E	1978-on	Mitsubishi	634-225
TX500/A	73-74	Hitachi	634-232
XS500B/C/D/E	75-78	Hitachi	634-232
XT500C/D/E/F Dual Sport	76-79	ND	634-226
XS1/XS1B/XS2-650	70-72	Hitachi	634-201
TX650/A	73-74	Hitachi	634-201
XS650B/C/D/E/F/2F	75-79	Hitachi	634-201
XS650SE/SF Special	78-79	Hitachi	634-201
TX750/A	73-74	Hitachi	———
XS750D/2D	1977	Hitachi	634-228

Yamaha Dual Sport & Offroad

Model	Year	Ignition	Ignition Kit
YZ50G	1980	Mitsubishi	634-230
JT1/JT1L-60 Mini Enduro	1971	Hitachi	634-206
JT2/JT2MX-60	1972	Hitachi	634-206
GT1-80	1973	Hitachi	634-206
GT80/A/B/C	73-76	Hitachi	634-206
GT80E/F	78-79	Hitachi	634-206
GTMX/GTMXA/GTMXB-80	73-75	Mitsubishi	634-207
GTMXC/GTMXD-80	76-77	Mitsubishi	634-207
GTMXE/GTMXF-80	78-79	Mitsubishi	634-230
MX80G/H/J	80-82	Mitsubishi	634-230
TY80A Trials	74-75	Mitsubishi	634-231
YZ80A/B/C/D/E	74-78	Mitsubishi	634-207
HT1-90	1970	Hitachi	634-206
HT1B-90	1971	Hitachi	634-210
HT1BM-90	1971	Hitachi	634-210
DT100A/B	74-75	Mitsubishi	634-231
DT100C/D	76-77	Mitsubishi	634-230
LT2/LT3-100 Enduro	72-73	Hitachi	634-210
LT2M/LTMX-100	72-73	Hitachi	634-210
MX100A/B	74-75	Hitachi	634-206
MX100F	1979	Mitsubishi	634-230
AT1E/AT1B/AT1C-125	69-71	Hitachi	634-206
AT2M-125/AT2MX-125	1972	Hitachi	634-210
AT2/AT3-125	72-73	Hitachi	634-210
DT125A/B/C	74-76	Hitachi	634-208
DT125E	1978	Mitsubishi	634-230
MX125A/B	74-75	Hitachi	634-206
CT1/CT1B/CT1C-175 Enduro	69-71	Hitachi	634-206
CT2/CT3-175 Enduro	72-73	Hitachi	634-210
DT175A/B/C Dual Purpose	74-76	Hitachi	634-211
TY175B/C Trials	75-76	Hitachi	634-221
DT1-250 Enduro	1968	Mitsubishi	634-203
DT1B/DT1C-250 Enduro	69-70	Mitsubishi	634-203
DT1S-250 Enduro	1969	Mitsubishi	634-203
DT1E-250 Enduro	1971	Mitsubishi	634-203
DT1C-MX250/DT1MX-250	70-71	Mitsubishi	634-203
DT2/DT3-250	72-73	Mitsubishi	634-203
DT250A/B/C/D/E	74-78	Mitsubishi	634-212
TY250A Trials	1974	Hitachi	634-221
TY250C/D Trials	76-77	Hitachi	634-221
RT1/RT1B-360 Enduro	70-71	Mitsubishi	634-203
RT2/RT3-360 Enduro	72-73	Mitsubishi	634-203
RT1MX/RT1B-MX360	70-71	Mitsubishi	634-203
TT500C/D/E/F	76-79	ND	634-226
XT500C/D/E/F Dual Sport	76-79	ND	634-226

634-611 Kawasaki Z1-900

Contact Breaker Plate Assy. & Ignition Contact Points

616-995

616-010

616-009

616-013

616-014

Sudco Contact Breaker Plate Assemblies

Includes mounting plate, contact points, and condensers.
Made in Japan.

Honda

OEM Reference 30200-300-154 — **Order No.** 616-990

Model	Year
CB750K0/K1-K5	69-75
CB750K	76-78

Kawasaki

OEM Reference 21135-011 — **Order No.** 616-995

Model	Year
Z1/A/B-900	73-75
KZ900A4/A5	76-77
KZ900B1 LTD	1976
KZ1000A1/A2/A2A	77-78
KZ1000B1/B2/B3 LTD	77-79
KZ1000C1/C1A/C2	78-79
KZ1000D1 Z1R	1978

PJ1 Super Cleaner

Multi-application, non-residue, evaporating degreaser

- High pressure blasts
- Powerful solvent melts oil, carbon, grease and grime away
- Dries quickly, displaces moisture and leaves no residue

Sold in California Compliant 13 fl. oz. aerosol can.

Order No. 899-081

Sudco Ignition Contact Points

OEM Daichi brand replacements. Sold each.
Made in Japan.

Honda

Hitachi Ignition	OEM Reference	Order No.
	30202-041-015	616-001
	30202-147-008	

NA50 Express II	79-80
NC50 Express	77-80
Z50AK0/AK1-AK6 Mini Trail	68-75
Z50A	76-78
Z50R	79-87
Z50RD	1986
ATC70/K1	73-74
ATC70	78-85
CL70/K1/K2/K3 Scrambler70	69-73
CT70K0 Trail 70	69-71
CT70 Trail 70	76-82
CT70HK0/HK1 Trail 70H	70-73
CT70K1/K2/K3/K4 Trail 70	72-75
SL70K0/K1 Moto Sport	71-73
XL70K0/K1	74-75
XL70	1976

XL75	77-79
XR75K0/K1/K2	73-75
XR75	76-78
XL80S	80-85
XR80	79-84
XR80R	85-88
XR80R	90-91
XR100	81-84
XR100R	85-88
XR100R	90-91

Nippondenso Ignition	OEM Reference	Order No.
	30202-107-004	616-002
	30202-216-004	

ATC90/K1/K2/K3	70-75
ATC90	76-78
CM91	66-69
CL90 Scrambler	67-69
CT90K0 Trail 90	66-68
CT90K1-K6 Trail 90	69-75
CT90 Trail 90	76-79
S90 Super 90	64-69
SL90 Motosport 90	1969
ST90K0/K1/K2 Trail Sport 90	73-75
CB100K0/K1/K2 Super Sport	70-72
CL100K0/K1/K2 Scrambler	70-72
CL100S Scrambler	1973
SL100/K1/K2/K3 Moto Sport	70-73
XL100/K1	74-76
ATC110	79-80
CB125S/S1/S2/S	73-76
CL125S/S1 Scrambler	73-74
CT125 Trail 125	1977
SL125/K1/K2 Moto Sport	71-73
TL125K0/K1/K2 Trials	73-75
TL125S Trials	1976

XL125	74-77
CA175 (CD175) Touring 175	68-69
CA175K3 Touring 175	69-70
CB175K3 Super Sport	1969
CB175K4-K7 Super Sport	70-73
CL175K0 Scrambler	68-69
CL175K3 Scrambler	69-70
CL175K4-K7 Scrambler	70-73
SL175K0/K1 Motosport 175	70-72
XL175/K1/K2	73-75
CB200	1974
CB200T	75-76
CL200	1974
TL250 Trials	75-76
XL250/K1/K2 Moto Sport	72-76
XL350K0/K1	74-75

Honda

Nippondenso Ignition	OEM Reference	Order No.
Right Side	30203-268-004	616-003
Left Side	30204-268-004	616-004

CB72 Hawk 250	61-68
CL72 Scrambler 250r	62-65
CB77 Super Hawk 305	61-68
CL77 Scrambler 305	65-68

Nippondenso Ignition	OEM Reference	Order No.
Right Side	30203-286-004	616-005
Left Side	30204-286-004	616-006

CB350G (2-cylinder)	1973
CB350K0/K1-K4 Super Sport	68-73
CL350K0/K1-K5 Scrambler	68-73
SL350/K1/K2 Moto Sport	70-72
CB360/G	1974
CB360T	75-76
CJ360T	76-77
CL360/K1 Scrambler	74-75

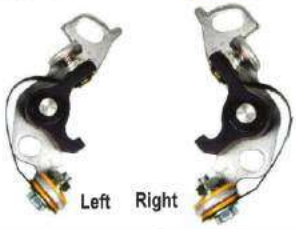

Hitachi Ignition	OEM Reference	Order No.
Right Side	30203-300-154	616-009
	30203-300-005	
Left Side	30204-300-154	616-010
	30204-300-005	

CB500/K1/K2	71-73
CB550F Super Sport	75-77
CB550K/K1	74-75
CB550K	76-78
CB750A Automatic	76-78
CB750K0/K1-K5	69-75
CB750K	76-78
CB750F Super Sport	75-78

Kokusan Ignition	OEM Reference	Order No.
	30202-028-003	616-011

CL90 Scrambler	67-69
CM91	66-69
CT90K0 Trail 90	66-68
CT90K1-K6 Trail 90	69-75
CT90 Trail 90	76-79
S90 Super 90	64-69
SL90 Motosport 90	1969

Kokusan Ignition	OEM Reference	Order No.
	30202-003-003	———

CA102 (50cc)	62-69
CA200 (90cc)	63-66
CT200 (90cc) Trail 90	64-66
CL125A Scrambler	67-69
SS125A Super Sport	67-69

Honda

Nippondenso Ignition	OEM Reference	Order No.
Right Side	30203-333-004	616-013
Left Side	30204-333-004	616-014

CB350F/F1 Super Sport	72-74
CB400F Super Sport	75-77

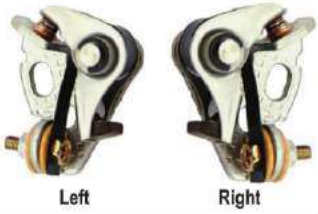

Hitachi Ignition	OEM Reference	Order No.
	30202-216-005	———

CA175 (CD175)Touring 175	68-69
CA175K3 Touring 175	69-70
CB175K3 Super Sport	1969
CB175K4-K7 Super Sport	70-73
CL175K0 Scrambler	68-69
CL175K3 Scrambler	69-70
CL175K4-K7 Scrambler	70-73
SL175K0/K1 Motosport 175	70-72
CB200	1974
CB200T	75-76
CL200	1974

Kokusan Ignition	OEM Reference	Order No.
Right Side	30203-292-003	616-017
Left Side	30204-292-003	616-018

CB450K0/K1-K7 Super Sport	65-74
CL450K0/K1-K7 Scrambler	68-74
CB500T	75-76
GL1000 Goldwing	75-79
GL1000L Goldwing LTD	1975

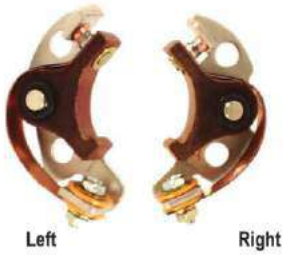

Kokusan Ignition	OEM Reference	Order No.
	30210-357-003	———

CR250M/M1 Elsinore	73-75
CR250M Elsinore	1976

	OEM Reference	Order No.
	30202-063-004	616-021
	30202-044-000	

P50 Moped	67-68
PC50 Moped	69-70
QA50/K1K2/K3	70-75

Nippondenso Ignition	OEM Reference	Order No.
	30200-358-004	616-407

MR250 Elsinore	1976
MT250K0/K1 Elsinore	74-75
MT250K Elsinore	1976

Ignition Contact Points

Honda

Hitachi Ignition	OEM Reference	Order No.
	30202-122-004	616-850

PA50I Moped	78-79
PA50II Moped	78-80

Nippondenso Ignition	OEM Reference	Order No.
	30202-131-004	———

MR50/K1 Elsinore	74-75
NA50 Express II	79-80
NC50 Express	77-80

Nippondenso Ignition	OEM Reference	Order No.
	30202-041-315	616-853
	30202-041-305	
	30202-041-004	
	30202-171-004	

CT70	80-82
FL250 Odyssey	77-80

Kawasaki

Kokusan Ignition	OEM Reference	Order No.
	21008-019	616-603

F81M-250	1971
F11M-250	1973
S1A/S1B/S1C-250	73-75
KH250A5	1976
S2/S2A-350	72-73
S3/S3A-400	74-75

Kokusan Ignition	OEM Reference	Order No.
	21008-006	616-604
	21008-020	

KD80/A2	75-76
KD80M1-M8	80-88
G3SS/A/B/C/D-90	69-74
G3TR-90	69-70
MC1/A/B-90	73-75
MC1M/MC1MA-90	74-75
G3SSE-100	1975
G3TRA-100	1971
G4TRA/B/C/D/E-100	70-75
G5/A/B/C-100	72-75
KD100M1/M2/M3/M4	76-79
KE100A5/A6/A7/A8/A9/A10	76-81
KE100B1-B14	82-95
KH100B7/B8	76-77
KM100A1-A7	76-81
KV100A7	1976
KD125/A2/A3/A4/A5	75-79
KE125A3-A9	76-82
KS125/A	74-75
F11/A/B-250	73-75

Kawasaki

Mitsubishi Ignition	OEM Reference	Order No.
	21008-002	616-605

D1-100	66-68
MT1/MT1A/MT1B/MT1C75	71-75
C2SS-120	67-69
C2TR-120	67-69

Mitsubishi Ignition	OEM Reference	Order No.
	21008-018	616-606

F6/A/B-125 Enduro	71-73
B1/B1L/B1LPA-125	1966
B1T/B1TL-125	66-69

Nippondenso Ignition	OEM Reference	Order No.
	21008-025	616-608
	21008-023	

KZ400A1/A2	77-78
KZ400/D//D3/D4	74-77
KZ400S/S2/S3 Special	75-77
KZ750B1/B2 2-cyl.	76-77

Mitsubishi Ignition	OEM Reference	Order No.
	21082-007	616-610

H1B-500	1972

Kokusan Ignition	OEM Reference	Order No.
	21008-027	616-612

KZ400B1/B2	78-79
KZ400C1	1978
KZ400H1 LTD	1979
KZ440A1 LTD	1980
KZ440B1	1980
KZ440D1 LTD Belt	1980
KZ750B3/B4 (2-cylinder)	78-79
KZ750G1 LTD (2-cylinder)	1980

Kokusan Ignition	OEM Reference	Order No.
	21008-1002	616-614

KLT200A1	1981
KZ200A1/A1A/A2	78-79
KL250A1/A1A/A2	78-79
KZ250D1	1980

Kawasaki

Kokusan Ignition	OEM Reference	Order No.
Left Side	21008-027	616-612
Right Side	21008-028	616-613

KZ550A1	1980
KZ650B1/B2/B2A/B3	77-79
KZ650C1/C2/C3 Custom	77-79
KZ650D1/D1A/D2 SR	78-79
KZ650E1 LTD	1980
KZ650F1	1980
Z1/A/B-900	73-75
KZ900A4/A5	76-77
KZ900B1 LTD	1976
KZ1000A1/A2/A2A	77-78
KZ1000B1/B2/B3 LTD	77-79
KZ1000C1/C1A/C2	78-79
KZ1000D1 Z1R	1978

Suzuki

Nippondenso Ignition	OEM Reference	Order No.
Left Side	33172-36210	616-013
Right Side	31440-36210	616-014

GS550B	1977
GS750B/C/EC/N/EN	77-79
GS750LN	1979
GS850GN	1979
GS1000C/EC/N/EN	78-79
GS1000LN	1979
GS1000SN	1979

Nippondenso Ignition	OEM Reference	Order No.
	31460-09010 LH	616-404
	31440-09010 RH	—

S32-150	1968
GT185K/L/M/A/B	73-77
TC185L/M/A/B Ranger	74-77
T10-250	63-64

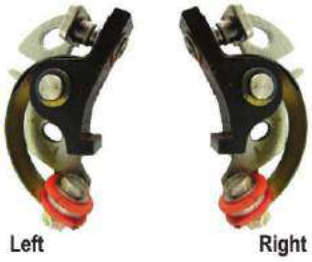

Nippondenso Ignition	OEM Reference	Order No.
Left Side	31460-11010	616-405
Right Side	31440-11010	616-403

T200	65-68
TC200	65-68
T20-250 X6	65-69
T250	1969
TC250	1969

Suzuki

Nippondenso Ignition	OEM Reference	Order No.
	32240-03010	616-406
	32240-43012	

F50R Moped	1971

Nippondenso Ignition	OEM Reference	Order No.
	32240-43012	616-407
	32240-28010	
	32240-12010	
	32240-20010	

AC50 Maverick	1971
AS50 Scrambler	1971
MT50R/J/K	71-73
TS50R/J/K/L	70-73
RV90J/K/L/M/A/B	72-77
TC90/R/J	70-72
TS90/R/J	70-72
TC100K/L/M/A/B Blazer	73-77
TS100K/L/M/A/B Honcho	73-77
T125II/R	69-70
TC125J/K/L/M/A/B Prospector	72-77
RV125K/L/M/A/B Tracker	73-77

Nippondenso Ignition	OEM Reference	Order No.
Center	33160-31010	616-409
Left Side	33170-31010	616-412
Right Side	33170-31010	616-412

GT550J/K/L/M/A/B Indy	72-77
GT750J/K/L/M/A/B Lemans	72-77

Nippondenso Ignition	OEM Reference	Order No.
Center	33160-33010	616-410
Left Side	33170-33010	616-413
Right Side	33170-33010	616-413

GT380J/K/L/M/A/B Sebring	72-77

Ignition Contact Points

Suzuki

Nippondenso Ignition	OEM Reference	Order No.
Left Side	31140-36210	616-419
	33160-44010	
Right Side	33140-44010	616-418

GS400B/XB 1977

Kokusan Ignition	OEM Reference	Order No.
Center	33170-34020	616-501
Left Side	33160-34020	616-502
Right Side	33160-34020	616-502

GT550J/K/L/M/A/B Indy 72-77

Kokusan Ignition	OEM Reference	Order No.
	31440-15020	616-503

GT380J/K/L/M/A/B Sebring 72-77 Center only

616-503

Kokusan Ignition	OEM Reference	Order No.
	31440-15020	616-603

T125II	1971	
T125R	1971	
GT250K/L/M/A/B	73-77	**LH only**
T250II	1970	**LH & RH**
T250R/J	71-72	**LH & RH**
T305	1969	**LH & RH**
TC305	1969	**LH & RH**
T350-1/2/R/J	69-72	**LH & RH**
GT380J/K/L/M/A/B	72-77	**LH & RH**
T5001/2/3	68-70	**LH & RH**
T500R/J/K/L/M Titan	71-75	**LH & RH**

Suzuki

Kokusan Ignition	OEM Reference	Order No.
	32240-07610	616-604
	32240-12020	

TC90/R	70-71
TS90/R	70-71
TC100K/L/M/A/B	73-77
TS100K/L/M/A/B	73-77
TS250I/II	69-70

Kokusan Ignition	OEM Reference	Order No.
	33160-44110 LH	616-612
	33160-45020	
	33140-44110 RH	616-613
	33140-45020	

GS400B/XB/C/XC	77-78
GS425N/EN	1979
GS425LN	1979
GS550B/C/EC/N/EN	77-79
GS550LN	1979

Kokusan Ignition	OEM Reference	Order No.
	32240-04420	616-862

JR50C/N/T/X/Z 78-82

Nippondenso Ignition	OEM Reference	Order No.
	32240-43012	616-860

RM50C/N/T	78-80
TS50J/K/L	72-74
DS80C/N/T/X/Z	78-82
DS100C/N/T	78-80
TS100C/N	78-79
DS125N/T	79-80
TS125C/N	78-79

Nippondenso Ignition	OEM Reference	Order No.
	32240-07022	616-861

B100	65-67
B105P	65-67
KT120	65-67
TC120	1971
TC120II	1971
TC120R	1971
TS250I/II Savage	69-70

Yamaha

Mitsubishi Ignition	OEM Reference	Order No.
	2A6-81321-20-00	616-001
	437-81321-20-00, 434-81321-10-00	
	2F5-81321-20-00, 1K8-81321-20-00	

YZ50G	1980
GTMXE/GTMXF-80	78-79
LB80-2AC/2AD/2AE	76-78
LB80-2HC/3D	76-77
MX80G/H/J	80-82
TY80A/B Trials	74-75
RS100B/C	75-76
DT100A/B/C/D/E/F	74-79
MX100F	1978
DT125E/F	78-79
AG175 (farm bike)	1974

TY175B/C Trials	75-76
TY250A Trials	1974
TY250C/D Trials	76-77

Nippondenso Ignition	OEM Reference	Order No.
	583-81621-50-00	616-002

TT500C/D/E/F	76-79
XT500C/D/E/F	76-79

Hitachi Ignition	OEM Reference	Order No.
Left Side	1J7-81621-10-00	616-010
Right Side	1J7-81622-10-00	616-220

XS750D/2D	1977

Left

Right

Hitachi Ignition	OEM Reference	Order No.
	132-81221-10-00	———

YL1/YL1E-100	66-67
AS2C-125	1969
YA6-125	1966
YAS1C-125	1968
YCS1/YCS1C-180	1968
CS3C-200	1970
AT1E/AT1B/AT1C-125	69-71

Hitachi Ignition	OEM Reference	Order No.
	207-81221-90-00	616-202
	207-81321-11-00	
	207-81321-10-00	

JT1/JT1L-60 Mini	1971
JT2/JT2MX-60	1972
RD60/A/B	73-75
GT1-80/GT80A/B/C/D/E/F	73-79
GTMX/GTMXA-80	73-74
HT1-90	1970
HT1B-90	1971
HT1BM-90	1971
LT2/LT3-100 Enduro	72-73
LT2M/LTMX-100	72-73
MX100A/B	74-75
AT1M/AT1MB/AT1-MX125	69-71
AT2M-125	1972
AT2MX-125	1972

AT2/AT3-125 Enduro	72-73
MX125A/B	74-75
CT1/CT1B/CT1C-175 Enduro	69-71
CT2/CT3-175 Enduro	72-73

Yamaha

Mitsubishi Ignition	OEM Reference	Order No.
	1M1-81321-20-00	616-203
	214-81321-20-00	

RT1/RT1B-360 Enduro	70-71
RT2/RT3-360 Enduro	72-73
RT1MX/RT1B-MX360	70-71
DT1/DT1B/DT1C-250 Enduro	68-70
DT1S-250 Enduro	1969
DT1E-250 Enduro	1971
DT1C-MX250/DT1MX-250	70-71
DT2/DT3-250	72-73
DT250A/B/C/D/	74-78

Mitsubishi Ignition	OEM Reference	Order No.
	120-81321-90-00	616-204
	120-81321-20-00	

YG5S-75	1969
G6S/GS6B/G7S-75	70-72

Mitsubishi Ignition	OEM Reference	Order No.
Left Side	278-81621-20-00	616-207
Right Side	278-81622-20-00	616-207

DS7-250	1972
RD250/A/B	73-75
R5/B/C-350	70-72
RD350/A/B	73-75

Hitachi Ignition	OEM Reference	Order No.
	256-81621-11-00	616-209

XS1/XS1B/XS2-650	70-72
TX650/A	73-74
XS650B/C/D/E/F/2F	75-79
XS650SE/SF	78-79
TX750/A	73-74

Hitachi Ignition	OEM Reference	Order No.
Right Side	371-81622-10-00	616-210
Left Side	371-81621-10-00	616-211

TX500/A	73-74
XS500B/C/D/E	75-78

Right Left

Mitsubishi Ignition	OEM Reference	Order No.
	1V1-81321-90-00	616-212
	1V1-81321-20-00, 296-81321-21-00	

GTMX/GTMXA/GTMXB-80	73-75
GTMXC/GTMXD-80	76-77
YZ80A/B/C/D	74-77

Ignition Contact Points

Yamaha

Hitachi Ignition	OEM Reference	Order No.
	183-81421-19-00	616-213
	183-81421-10-00	

U7E-70	1969
HS1/HS1B-90	70-71
LS2-100	1972
AS2C-125 eng 025702	1969
DT125A/B/C	74-76
RD125B/C	75-76
YAS1C-125	1968
RD200A/B/C - LH & RH	74-76

Mitsubishi Ignition	OEM Reference	Order No.
	1M1-81321-20-00	616-214
	438-81321-20-00	

DT250A/B/C/D/E	74-78

Hitachi Ignition	OEM Reference	Order No.
	443-81321-10-00	616-215

DT175A/B/C Dual Purpose	74-76

Mitsubishi Ignition	OEM Reference	Order No.
	1A0-81621-20-00	616-216

RD400C/D/E	76-78

Nippondenso Ignition	OEM Reference	Order No.
Left Side	1L9-81621-51-00	616-217
	1L9-81621-50-00	
Right Side	1L9-81622-50-00	616-218
	1L9-81622-50-00	

XS360C/D/2D	76-77
XS400D/E/2E/F/2F	77-79

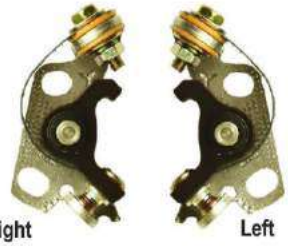

BSA, Matchless, Norton, Triumph

OEM Reference	Order No.
54415803	616-900

CC	Applications	Year
736	Matchless Interceptor	67-68
500	Matchless Major G80	64-65
650	Matchless Swift G12	65-66
350	Norton 50MK	65-
500	Norton ES2MK	
750	Norton P11	67-68
200	Triumph T20SC	63
200	Triumph T20	63-64
500	Triumph	63-67
650	Triumph	63-67
250	BSA Starfire	1968
441	BSA Shooting	1968

BSA, Enfield, Matchless, Norton, Triumph

OEM Reference	Order No.
54419827	616-901

750	Matchless	1968
	Norton P11	1968
250	BSA	68-70
500	BSA A50	68-70
650	BSA A65	68-70
736	Enfield	68-70
750	Norton	68-70
250	Triumph	68-70
500	Triumph Tiger	68-70
250	Triumph	68-70
650	Triumph Trophy	68-70

Hodaka

Kokusan Ignition	OEM Reference	Order No.
	943016	616-604

100 Road Toad
125 Wombat

Triumph

OEM Reference	Order No.
60600271	616-800

Bonneville	73-78

OEM Reference	Order No.
5449828	616-801

Trident TR6/7	69-76

Sudco Condensers

OEM Daichi brand replacements. Sold each.
Made in Japan.

Honda

Hitachi Ignition	OEM Reference	Order No.
	30250-042-005	617-001

Z50AK0/AK1-AK6 Mini Trail	68-75
Z50A	
76-78	
Z50R	79-87
Z50RD SpecialQ	1986
ATC70/K1	73-74
ATC70	78-85
CT70K0 Trail 70	69-71
CT70 Trail 70	76-82
CT70HK0/HK1 Trail 70H	70-73
CT70K1/K2/K3/K4 Trail 70	72-75
SL70K0/K1 Moto Sport	71-73
XL70K0/K1	74-75
XL70	1976

XL75	77-79
XR75K0/K1/K2	73-75
XR75	76-78
XL80S	80-85

Nippondenso Ignition	OEM Reference	Order No.
	30250-107-000 30250-330-003	617-002

CB100K0/K1/K2 Super Sport	70-72
CL100K0/K1/K2 Scrambler	70-72
CL100S Scrambler	1973
SL100/K1/K2/K3 Moto Sport	70-73
XL100/K1	74-76
CB125S/S1/S2/S	73-76
CB125S	1978
CL125S/S1 Scrambler	73-74
SL125/K1/K2 Moto Sport	71-73

Hitachi, Kokusan & Nippondenso Ignition	OEM Reference	Order No.
	30280-216-000	617-006

CA160 Touring 160	66-69
CB160 Sport 160	65-69
CL160 Scrambler	66-67

Nippondenso Ignition	OEM Reference	Order No.
	30250-333-004	617-007

CB350F/F1 Super Sport	73-74
CB400F Super Sport	75-77

Nippondenso & Kokusan Ignition	OEM Reference	Order No.
	30250-028-000	617-008

CL90 Scrambler	67-69
S90 Super 90	64-69

Honda

Kokusan Ignition	OEM Reference	Order No.
	30250-001-013	617-009

C100 (50cc) Super Cub	59-62
CA100 (50cc)	62-70

Nippondenso Ignition	OEM Reference	Order No.
	30250-268-024 30250-268-014 30250-268-004	No Longer Available

CB72 Hawk 250	61-66
CL72 Scrambler	62-65
CB77 Scrambler 305	65-68

Nippendenso Ignition	OEM Reference	Order No.
	30250-273-000	———

CB72 Hawk 250	61-66
CL72 Scrambler	62-65
CB77 Super Hawk 305	61-68
CL77 Scrambler	65-68

Nippondenso Ignition	OEM Reference	Order No.
	30250-273-003 30250-362-000	———

XL175/K1/K2	73-75

Nippondenso Ignition	OEM Reference	Order No.
	30280-237-154 30280-237-005	———

CA175K3 Touring 175	69-70
CB175K4-K7 Super Sport	70-73
CL175K4-K7 Scrambler	70-73
SL175K0/K1 Motorsport	70-72
CB200	1974
CB200T	75-76
CL200	1974

Nippondenso Ignition	OEM Reference	Order No.
	30280-286-701	617-015

Japan domestic model single point 350

CB350
CB450

Condensers

Honda

Hitachi Ignition	OEM Reference	Order No.
	30280-235-000	617-016

CB175K3	1969
CL175K0 Scrambler	68-69
CL175K3	1969

Nippondenso Ignition	OEM Reference	Order No.
	30250-369-004	617-017

CB360/G	1974
CB360T	75-76
CJ360T	76-77
CL360/K1 Scrambler	74-75

Nippondenso Ignition	OEM Reference	Order No.
	30250-052-000	617-018

ATC90/K1/K2/K3	70-75
ATC90	76-78
CM91	66-69
CT90	66-68
CT90K0 Trail 90	66-68
CT90K1-K6 Trail 90	69-75
CT90 Trail 90	76-79
FL250 Odyssey	77-80

Kokusan Ignition	OEM Reference	Order No.
	30280-292-672	617-020
	30280-371-000	

CB350G Super Sport 350 2-cyl.	1973
CB350K0/K1-K4 Super Sport 2-cyl	68-73
CL350K0/K1-K5 Scrambler 350	68-73
SL350/K1/K2 Moto Sport	69-73
CB450K0 Super Sport	65-68
CB450K1-K7 Super Sport	68-74
CL450K1-K6 Scrambler	68-74
CB500T	75-76
GL1000 Goldwing	75-79
GL1000L Goldwing LTD	1976

Hitachi Ignition	OEM Reference	Order No.
	30250-300-005	617-022
	30250-300-154	

CB500/K1/K2	71-73
CB550F Super Sport	75-77
CB550K/K1	74-75
CB550/K	76-78
CB750A Automatic	76-78
CB750F Super Sport	75-78
CB750K0	69-70
CB750K1-K5	70-75
CB750K	76-78

Honda

Kokusan Ignition	OEM Reference	Order No.
	30280-357-003	617-023

CR250M/M1 Elsinore	73-75
CR250M	1976

Hitachi Ignition	OEM Reference	Order No.
	30250-035-005	617-024
	30250-041-005	

Z50AK0/AK1-AK6 Mini Trail	68-75
Z50A	76-78
Z50R	79-87
Z50RD SpecialQ	1986
ATC70/K1	73-74
ATC70	78-85
CT70K0 Trail 70	69-71
CT70 Trail 70	76-82
CT70HK0/HK1 Trail 70H	70-73
CT70K1/K2/K3/K4 Trail 70	72-75
SL70K0/K1 Moto Sport	71-73
XL70K0/K1	74-75
XL70	1976
XL75	77-79
XR75	76-78
XL80S	80-85

Mitsubishi Ignition	OEM Reference	Order No.
	30250-035-006	617-025

S65 Sport 65	65-69
CT70 Trail 70	80-82
CT70HK0/HK1 Trail 70H	70-73
SL70K0/K1 Moto Sport	71-73
XL70K0/K1	74-75

Nippondenso Ignition	OEM Reference	Order No.
	30250-329-305	617-027

MT125K0/K1 Elsinore	74-75
MT125 Elsinore	1976
XL250/K1/K2 Moto Sport	72-76
MT250K0/K1 Elsinore	74-76
XL350K0/K1	74-75
XL350	76-78

Nippondenso Ignition	OEM Reference	Order No.
	30250-402-010	617-850

CM185T Twinstar	78-79

Kokusan Ignition	OEM Reference	Order No.
	30250-436-000	617-851

XL100S	79-80

Honda

Nippondenso Ignition	OEM Reference	Order No.
	30250-041-004 30250-035-003	617-852

S65 Sport 65	65-69
CT70	80-82

Kokusan & Nippondenso Ignition	OEM Reference	Order No.
	30250-074-003 30250-035-003	617-853

SL90	1969

	OEM Reference	Order No.
	30254-402-701 30250-035-003	617-854

CM200T Twinstar	1980

Kawasaki

Kokusan Ignition	OEM Reference	Order No.
	21013-029	617-601

Z1/A/B-900	73-75

Kokusan Ignition	OEM Reference	Order No.
	21013-026	617-602

S1A/S1B/S1C-250	73-75
KH250A5	1976
S2/S2A-350	72-73
S3/S3A-400	74-75

Kokusan Ignition	OEM Reference	Order No.
	21013-006	617-603

KD80/A2	75-76		
KD80M1-M8	80-88		
G3SS/A/B/C/D-90	69-74		
G3TR-90	69-70		
MC1/A/B-90	73-75		
MC1M/MC1MA-90	74-75		
G3SSE-100	1975		
G3TRA-100	1971	KH100B7/B8	76-77
G4TRA/B/C/D/E-100	70-75	KM100A1-A7	76-81
G5/A/B/C-100	72-75	KV100A7	1976
KD100M1/M2/M3/M4	76-79	KD125/A2/A3/A4/A5	75-79
KE100A5/A6/A7/A8/A9/A10	76-81	KE125A3-A9	76-82
KE100B1-B14	82-95	KS125/A	74-75

Kawasaki

Mitsubishi Ignition	OEM Reference	Order No.
	21013-001	617-604

D1-100	66-68
MT1/MT1A/MT1B/MT1C-75 Mini	71-75
C2SS-120	67-69
C2TR-120	67-69

Mitsubishi Ignition	OEM Reference	Order No.
	21013-023	617-605

F6/A/B-125 Enduro	71-73

Mitsubishi Ignition	OEM Reference	Order No.
	21013-015	617-606

H1B-500 Mach III	1972

Kokusan Ignition	OEM Reference	Order No.
	21013-030 21013-022	617-607

F8/F8A-250	71-72
F11/A/B-250	73-75

Nippondenso Ignition	OEM Reference	Order No.
	21013-031	617-608

KZ400A1/A2	77-78
KZ400/D//D3/D4	74-77
KZ400S/S2/S3 Special	75-77

Nippondenso Ignition	OEM Reference	Order No.
	21013-034	617-609

KZ400A1/A2	77-78
KZ400/D//D3/D4	74-77
KZ400S/S2/S3 Special	75-77
KZ750B1/B2 2-cyl	76-77

Condensers

Kawasaki

Kokusan Ignition	OEM Reference	Order No.
	21013-037	617-611

KZ550A1	1980
KZ650B1/B2/B2A/B3	77-79
KZ650C1/C2/C3 Custom	77-79
KZ650D1/D1A/D2 SR	78-79
KZ650E1 LTD	1980
KZ650F1	1980

Kokusan Ignition	OEM Reference	Order No.
	21013-033	617-612

KV75A5/A6	75-76

Kokusan Ignition	OEM Reference	Order No.
	21013-036	617-613

KLT200A1	1981
KZ200A1/A1A/A2	78-79
KL250A1/A1A/A2	78-79
KZ250D1	1980

Kokusan Ignition	OEM Reference	Order No.
	21013-1004	617-614

KZ400B1/B2	78-79
KZ400C1	1978
KZ400H1 LTD	1979
KZ440A1 LTD	1980
KZ440B1	1980
KZ440D1 LTD Belt	1980

Kokusan Ignition	OEM Reference	Order No.
	21013-035	617-615

Z1/A/B-900	73-75
KZ900A4/A5	76-77
KZ900B1 LTD	1976
KZ1000A1/A2/A2A	77-78
KZ1000B1/B2/B3 LTD	77-79
KZ1000C1/C1A/C2 Police	78-79
KZ1000D1 Z1R	1978

Suzuki

Nippondenso Ignition	OEM Reference	Order No.
	33241-02030	617-401
	33241-12130, 31641-01310	

A100	1969
AC100	1969

Suzuki

Kokusan Ignition	OEM Reference	Order No.
Right Side	31641-11011	617-402
Left Side - **Not available**	31642-11011	

T200 RH only	65-68
TC200 RH only	65-68
T20	1969
TC250	1969

Nippondenso Ignition	OEM Reference	Order No.
	31440-11010	617-403

T125II	70-71
T125R	70-71

Nippondenso Ignition	OEM Reference	Order No.
	31642-09010	617-404

S32-150	1968
TC185L/M/A/B Ranger	74-77
T10-250	63-64

Nippondenso Ignition	OEM Reference	Order No.
Right Side	31642-09010	617-404
Left Side	31641-09010	617-406

GT185K/L/M	73-75

Nippondenso Ignition	OEM Reference	Order No.
Right Side	32341-03110	617-407

AC50 Maverick	1971
AS50 Scrambler	1971
MT50R/J/K	71-73
F50R Moped	1971
TS50R/J/K/L	71-74
TM75L/M/A	74-76
TS75M/A/B Colt	75-77
RV90J/K/L	72-74
RV90M	1975

Nippondenso Ignition	OEM Reference	Order No.
	31241-12011	617-408
	31241-12010	

RV90M	1975
RV90A/B	76-77
TC90/R/J	70-72
TS90/R/J	70-72
A100A/B Gopher	76-77
TC100K/L/M/A/B Blazer	73-77
TS100K/L/M/A/B Honcho	73-77
RV125K/L/M/A/B Tracker	73-77
TC125J/K/L/M/A/B Prospector	72-77
TS125R/J/K/L/M/A/B Duster	71-77

Suzuki

Nippondenso Ignition	OEM Reference	Order No.
	33261-33010	617-409
	32341-31010	

GS550B/C/EC/N/EN	77-79
GT550J/K/L/M/A/B	72-77
GS750B/C/EC/N/EN	77-79
GS750LN	1979
GT750 J/K/L/M/A/B	72-77
GS850GN	1979
GS1000C/EC/N/EN	78-79
GS1000LN/SN	1979

Nippondenso Ignition	OEM Reference	Order No.
	33261-38010	617-410

GT380J/K/L/M/A/B	72-77

Kokusan Ignition	OEM Reference	Order No.
Left Side	32341-34020	617-501
Center	32342-34020	———
Right Side	32343-34020	———

GT550J/K/L/M/A/B	72-77

Nippondenso Ignition	OEM Reference	Order No.
Left Side	33261-33020	617-504
Center	33262-33020	617-505
Right Side	33263-33020	617-506

GT380J/K/L/M/A/B	72-77

Kokusan Ignition	OEM Reference	Order No.
	32341-25890	617-507
	32342-12021	

TC90/R/J	70-72
TS90/R/J	70-72
TC100K/L/M/A/B	73-77
TS100K/L/M/A/B Honcho	73-77
TS250I/II Savage	69-70

Suzuki

Kokusan Ignition	OEM Reference	Order No.
Right Side	31641-18522	617-508
	31641-18521, 31641-15021	
	31641-18520	
Left Side	31642-18522	617-509
	31642-18521,	
	31642-15022, 31642-15021	

GT250K/L/M/A/B	73-77
T250II	1970
T250R/J	71-72
T305	1969
TC305	1969
T350	69-70
T350-1/2/R/J	69-72
T5001/2/3	68-70
T500R/J/K/L/M Titan	71-75

Nippondenso Ignition	OEM Reference	Order No.
Left Side	31641-09010	617-510
Right Side	31642-09010	617-404

GT185A/B	76-77

Nippondenso Ignition	OEM Reference	Order No.
	31641-09010	617-510

S32-150	1968
S32-2-150	1968
TC185L/M/A/B Ranger	74-77

Kokusan Ignition	OEM Reference	Order No.
	32341-07020	617-511

B100	65-67
B105P	65-67
KT120	65-67
TC120	1971
TC120II	1971
TC120R	1971
TS250I/II Savage	69-70

Kokusan Ignition	OEM Reference	Order No.
	33261-45020	617-610

GS550B/C/EC/N/EN	77-79
GS550LN	1979
GS750B	1977

Condensers

Suzuki

Kokusan Ignition	OEM Reference	Order No.
	32341-26030	617-860

OR50N/T	79-80

Kokusan Ignition	OEM Reference	Order No.
	32341-04020	617-861

JR50C/N/T/X/Z	78-82

Triumph

	OEM Reference	Order No.
	54420128	617-800

Bonneville	68-78
Trident	68-72

Yamaha

Hitachi Ignition	OEM Reference	Order No.
Left Side	278-81625-91-00	617-201
	132-81225-10-00	
Right Side	278-81626-91-00	617-202
	132-81226-10-00	

YL1/YL1E-100	66-67
YCS1/YCS1C-180	1968
CS5-200	1972
RD200A/B/C	74-76

Mitsubishi Ignition	OEM Reference	Order No.
	214-81326-90-00	617-203
	214-81326-20-00	

DT1C/DT1E-MX250	70-71
DT1/DT1B/DT1C-250 Enduro	68-70
DT1S-250 Enduro	1969
DT1E-250 Enduro	1971
DT2/DT3-250	72-73
DT250A/B/C/D/E	74-78
RT1/RT1B/RT2/RT3-360 Enduro	70-73
RT1M/RT1MX-360	70-71

Yamaha

Mitsubishi Ignition	OEM Reference	Order No.
Right Side	169-81125-20-00	617-204
Left Side	169-81126-21-00	617-205

DS6B/DSC6 -250	69-70
YDS5-250	1967
YM2C-350	1966

Hitachi Ignition	OEM Reference	Order No.
	207-81326-90-00	617-206
	207-81326-10-00	

JT1/JT1L-60 Mini	1971
JT2/JT2MX-60	1972
RD60/A/B	73-75
GT1/GT80A/B/C	73-76
GT80E/F	78-79
HT1-90	1970
MX100A/B	74-75
AT1-E125	1969
AT1B/AT1C-125	70-71
AT1M-125	1969
AT1MB-MX125	1970

AT1MX-125	1971
MX125A/B	74-75
CT1/CT1B/CT1C-175	69-71
TY175B/C Trials	75-76
TY250A Trials	1974
TY250C/D Trials	76-77

Hitachi Ignition	OEM Reference	Order No.
	207-81326-90-00	617-209

XS1/XS1B/XS2-650	70-72
TX650/A	73-74
XS650B/C/D/E/F/2F	75-79
XS650SE/SF Special	78-79

Mitsubishi Ignition	OEM Reference	Order No.
	360-81625-90-00	617-210
	360-81625-20-00	

RD250/A/B	73-75
RD350/A/B	73-75
RD400C/D/E/F	76-79

Yamaha

Mitsubishi Ignition	OEM Reference	Order No.
	296-81325-90-00 296-81325-20-00	617-211

YG1/YG1K/YG1T/YG1TK-60	63-66
YJ1/YJ1K/YJ2/YJ2S-60	64-65
YG5S-75	1969
GTMX/GTMXA/GTMXB-80	73-75
GTMXC/GTMXD-80	76-77
TY80A/B Trials	74-75
YZ80A/B/C/D	74-77
DT100A/B	74-75
RS100B	1975

Hitachi Ignition	OEM Reference	Order No.
	278-81625-91-00 278-81625-90-00, 278-81625-20-00, 148-81126-10-00	617-212

U7E-70	1969
YA6-125	1966
DT125A/B/C	74-76
DS7-250 LH only	1972
R5/B/C-350 LH only	70-72

Hitachi Ignition	OEM Reference	Order No.
	371-81625-10-00	617-213

TX500/A	73-74
XS500B/C/D/E	75-78

Hitachi Ignition	OEM Reference	Order No.
	277-81326-10-00 277-81326-90-00	617-214

HT1B/HT1BM-90	1971
LT2/LT3-100	72-73
LT2M/LTMX-100	72-73
AT2/AT3-125	72-73
AT2M-125/ATMX-125	72-73
CT2/CT3-175 Enduro	72-73
DT175A/B/C	74-76

Hitachi Ignition	OEM Reference	Order No.
	371-81625-10-00	617-215

DT250A/B/C/D/E	74-78

Yamaha

Hitachi Ignition	OEM Reference	Order No.
	IJ7-81625-10-00	617-216

XS750D/2D	1977

Hitachi Ignition	OEM Reference	Order No.
	341-81625-10-00	———

TX750/A	73-74

Mitsubishi Ignition	OEM Reference	Order No.
	1K8-81325-20-00 511-81325-20-00	617-219

LB50PE/PF/PG/PH/PJ	78-82
YZ50G	1980
GTMXE/GTMXF-80	78-79
LB80-2AC/2AD/2AE	76-78
LB80-2HC	1976
LB80-3D	1977
MX80G/H/J	80-82
DT100C/D	76-77
MX100F	1979
RS100C	1976
DT125E	1978

Condensers

Yamaha

Nippondenso	OEM Reference	Order No.
	583-81625-50-00	617-222

XT500C/D/E/F Dual Sport	76-79
TT500C/D/E/F	76-79

Mitsubishi Ignition	OEM Reference	Order No.
Left side only for models listed. Right side not available.	168-81226-20-00	617-224

R3-350	1969
YR1	1968
YR2-350	1968
YR2C-350	1968

Yamaha

Mitsubishi Ignition	OEM Reference	Order No.
	2F5-81325-20-00 2F5-81325-90-00	617-870

DT100E/F	78-79
DT125F	1979

Mitsubishi Ignition	OEM Reference	Order No.
	2F5-81325-20-00	617-871

HS1/HS1B-90	70-71
LS2-100	1972
AS2C-125	1969
RD125B/C	75-76
YAS1C-125	1968
CS3B-200	1971
CS3C-250	1970

Yamaha RT1-360

Kawasaki Stator

Direct bolt-on replacement stator for Kawasaki Z1/KZ900 & KZ1000 models with all connectors. Sold each.

Order No. 615-150

Kawasaki Street

Z1/A/B-900	73-75
KZ900A4/A5	76-77
KZ900B1 LTD	1976
KZ1000A1/A2/A2A	77-78
KZ1000B1/B2 LTD	77-78
KZ1000C1/C1A Police	1978
KZ1000D1 Z1R	1978

Kawasaki Main Wiring Harness

Replica of the original wiring harness.
Available for the following models:

Kawasaki Street

Model	Year	Order No.
H1/H1A/H1B-500	69-71	900-120
H2/H2A-750	72-73	900-121
KZ900A4/A5	76-77	900-125
KZ900B1 LTD	1976	900-125
Z1/Z1A/Z1B-900	73-75	900-123
KZ1000A1/A2/A2A	77-78	900-124

7 Way Crimping Tool (CT-1)

- Incorporates wire cutter, terminal crimper and wire stripper into one handy tool
- Black anodized finish with insulated hand grips
- Crimp slot on end of tool secures most ignition terminals including "W" type, right angle and "High-Tower" terminals
- Crimps 7mm to 8.5mm ignition wire
- Works with 10 to 22 gauge solder less terminals
- **WARNING** - Disconnect power source before using this tool.

Order No. 618-999

Ignition Switches

900-453

900-454

900-455

900-456

900-451

900-450

Ignition Switches

Designed as OEM replacements. Switches are direct plug-in to the wiring harness and no soldering or crimping required. Two keys included with each switch. Sold each.

Honda

Flat Key CBR/VF Switch	Order No. 900-453
Model	Year
VF500F Interceptor	84-86
CBR600F Hurricane	87-90
VF700C Magna	84-86
VF750C Magna	82-83
VF750S Sabre	82-83
VF750F Interceptor	83-84
CBR1000F Hurricane	87-88
VF1000F Interceptor	1984

Flat Key 5-Prong base with accessory position	Order No. 900-454
CB400F Super Sport	1977
CB550K	77-78
CB550F Super Sport	77-78
CB650	79-82
CB650C Custom	79-82
CB750A Automatic	77-79
CB750K	77-79
CB750L LTD	1979
CB750C Custom	79-82
CB750F Super Sport	79-82
CB750SC Nighthawk	82-83
CB900C Custom	80-82
CB900F Super Sport	80-82
CBX1000	79-80
GL1000	76-77

Flat Key with round end plug — **Order No. 900-456**
All CB/CL175/350/450/750

Flat Key with square end plug — **Order No. 900-455**
All CB500/550/750

Kawasaki

Flat Key - Late model KZ1000/1100 Switch	Order No. 900-451
EX250F2/F3/F4 Ninja 250r	88-90
EX250F6/F7/F8 Ninja 250R	92-94
EX500A1/A2/A3/A4/A5/A6/A7	87-93
KZ550A3/A4	82-83
KZ550C3/C4 LTD	82-83
KZ550F1/F2 Spectre & LTD	83-84
KZ550M1 LTD	1983

Continue model listing on next column

Kawasaki

Flat Key - Late model KZ1000/1100 Switch	Order No. 900-451
Model	Year
ZX550A1/A2 GPz	84-85
ZX600A1/A2/A3 Ninja 600	85-87
ZX600B1 Ninja 600 RX	1987
ZX600C1~C6 Ninja 600R	88-93
KZ650H1/H2/H3 CSR	81-83
KZ700A1	1984
KZ750E1/E2/E3	80-82
KZ750F1 LTD	1983
KZ750H1/H2/H3/H4 LTD	80-83
KZ750L3	1983
KZ750M1 CSR Twin	1982
KZ750N1/N2 Spectre	82-83
KZ750R1 GPz	1982
ZX750A1/A2/A3 GPz	83-85
ZX750E1/E2 GPZ Turbo	84-85
ZX750F1/F2/F3/F4 Ninja 750R	87-90
ZX900A1/A2/A3 Ninja	84-86
KZ1000E1/E2 Shaft ST	79-80
KZ1000P Police	82-93
KZ1000R2 Replica	1983
KZ1100A3 Shaft	1983
KZ1100B2 GPz	1982
KZ1100D2 Spectre	1983
KZ1100L1 LTD	1983
ZX1100A1/A2 GPz	83-84

Flat Key - Early model KZ900/1000/ Switch	Order No. 900-450
(Fits both four and six prong plug connectors	
KZ650B1/B2/B2A/B3	77-79
KZ650C1/C2/C3 Custom	77-79
KZ650D1/D2 SR	78-79
KZ650E1/F1	1980
KZ750B1/B2/B3/B4 (2 cylinder)	76-79
KZ750G1 LTD (2 cylinder)	1980
Z1/A/B-900	73-75
KZ900A4/A5	76-77
KZ900B1 LTD	1976
KZ1000A1/A2	77-78
KZ1000A3/A3A/A4 MK II	79-80
KZ1000B1/B2/B3/B4 LTD	77-80
KZ1000C1/C1A/C2/C3/C4 Police	78-81
KZ1000D1 ZIR	1978
KZ1000D3 ZIR	1980

Ignition Switches

900-461

900-462

900-465

Suzuki

Flat Key Switch GSXR/GSF	Order No. 900-460
Model	Year
GSF600ST/SV/SW Bandit	96-98
GSX-R600V	1997
GSX-R750WR/WS	94-95
GSX-R750T/V	96-97
TL1000SV	1997
GSX-R1100WS/WT/WV/WW	95-98
GSF1200SV/SAV/SW/SAW Bandit	97-98

Flat Key Switch	Order No. 900-461
GSF400M/N/P Bandit	91-93
GS500EK-EW	89-98
GSX600FJ-FV Katana	88-97
GSX-R600WN/WP	92-93
RF600RR/RS/RT	94-96
GSX750FK-FV Katana	89-97
GSXR-750J/K/L/M/N	88-92
GSX-R750WP	1993
VX800I/M/N	90-93
RF900RR/ RS/ RT/ RV	94-97
RF900RZS	1995
GSX1100GM/GN/GP Shaft	91-93
GSXR-1100K/L/M/N	89-92
GSXR1100WP/ WR	93-94

Flat Key Switch	Order No. 900-462
GS450ET/EX/EZ	80-82
GS450LT /LX/LZ/LD	80-83
GS450ST/SX	80-81
GS450TX/TZ/TXZ/TXD	81-83
GS550B/C/EC/N/EN/ET	77-80
GS550LN/LT/LX/LZ	79-82
GS550TX	1981
GS550MZ Katana	1982
GS650EX/EZ	81-82
GS650GX/GZ/GD	81-83
GS650GLX/GLZ/GLD	81-83
GS650MD Katana	1983
GS750C/EC/N/EN	78-79
GS750LN/LT/LX	80-81
GS850GLT/GLX/GLZ/GLD	80-83
GS1000LN/SN	1979
GS1000GLT/GLX	80-81
GS1100EZ/ED	82-83
GS1100GLZ/GLD	82-83
GS1100LT	1980

Yamaha

Flat Key Switch	Order No. 900-465
Model	Year
SR250G/H/J Exciter	80-82
SR250TH Exciter II	80-82
SRX250T/TC	1987
XS400H Special II	1981
XS400SH/SJ Heritage Special	81-82
XS400RJ/RK Seca	82-83
XV500K Virago	1983
XJ550H/J/K Maxim	81-83
XJ550RH/RJ/RK Seca	81-83
FJ600L/LC/N/NC	84-85
FZ600S/SC/T/TC/U/UC	86-88
FZR600W/WC/AC	89-90
FZR600RA/RAC/RB/RBC/RD/RDC	90-92
FZR600RE/REC/RF/RFC/RG/RGC	93-95
FZR600RH/RHC/RJ/RJC	96-97
XJ600SD/SDC/SE/SEC Seca II	92-93
XJ650G/H/J/K Maxim	80-83
XJ650LH Midnight Maxim	1981
XJ650RJ Seca	1982
XS650H Special II	1981
XS650SH Special	1981
XS650SJ/SK Heritage Special II	82-83
FZ700T/TC	1987
FZ750N/S/SC	85-86
FZ750U/UC	1988
FZR750RT/RU	87-88
XJ750K Maxim	1983
XJ750MK Midnight Maxim	1983
XS750SE/SF	78-79
XV750H/J/K Virago	82-83
XV750MK Midnight Virago	1983
XS850LH/SH Special	1981
XJ900RK Seca	1983
XV920RH/RJ Euro Virago only (chain drive)	81-82
Does not fit 1983 XV920MK Midnight and XV920J/K 82-83	
FZR1000T/TC/U/UC	87-88
FZR1000W/WC/A/AC/B/BC	89-91
FZR1000D/DC/E/EC	92-93
FJ1100L/LC/N/NC	84-85
FJ1200S/SC/T/TC	86-87
FJ1200W/WC/A/AC/B/BC/D/DC	89-92
FJ1200AD/ADC/AE/AEC (ABS)	92-93

Turn Signals & Turn Signal Stems

721-001

721-002

OEM Style Replacement Turn Signals

Designed as OEM replacements. Sold each.

Honda

Model	Year	Front	Rear
CB350K0/K1/K2/K3/K4	68-73	721-001	721-002
CB400F Super Sport	75-77	721-005	721-006
CB500T	75-76	721-005	721-006
CX500C Custom	79-82	721-005	721-006
CX500D Deluxe	79-81	721-005	721-006
CB550F Super Sport	75-77	721-005	721-006
CB750K0/K1/K2/K3/K4	69-74	721-001	721-002
CB900 C Custom	80-82	721-005	721-006
CB1100F Supersport	1983	721-021	721-022
CBX1000	81-82	721-015	721-016

Kawasaki

KZ200A1/A2	78-79	721-634	721-633
KZ250D1/D2/L1/W1	80-83	721-634	721-633
S1/KH250	73-78	721-633	721-633
KZ305A1/A2B1-B3	81-82	721-634	721-633
KZ305A1/A2B1-B3	87-88	721-634	721-633
S2-350 2-stroke triple	1972	721-601	721-601
S2A-350 2-stroke triple	1973	721-633	721-633
S3-400	74-75	721-633	721-633
KH400 A5	78-79	721-633	721-633
KZ400A1/A2	77-78	721-601	721-601
KZ440A3-A4/D2-D5	82-84	721-634	721-633
H1D/H1E/H1F	73-75	721-633	721-633
KH500A8	1976	721-633	721-633
KZ550C1-C4/F2/M1	80-84	721-634	721-633
KZ550D1, H2-H3 GPz	81-83	721-621	———
KZ650B1	1977	721-601	721-601
KZ650D1/D2/H1-H3	78-79	721-634	721-633
KZ650D1/D2/H1-H3	81-83	721-634	721-633
KZ700A1	1984	721-621	———
KZ750F1/H1-H4/M1	80-83	721-634	721-633
KZ750L3	1983	721-621	———
KZ750R1 GPz	1982	721-621	———
H2B/C-750 Mach IV	74-75	721-601	721-601
KZ750B1/B2 2-cyl	76-77	721-601	721-601
Z1/A/B-900	73-75	721-601	721-601
KZ900A4/A5	76-77	721-601	721-601
KZ900B1 LTD	1976	721-601	721-601
KZ900B1	81-82	721-633	———
KZ1000A1	1977	721-601	721-601
KZ1000A3/A3A/A4 MK11	79-80	721-631	721-632
KZ1000B1-B4/K1/K2	77-82	721-634	———
KZ1000D1 Z1R	1978	721-611	721-612
KZ1000D3 Z1R	1980	721-611	721-612
KZ1000J1/J2/J3	81-83	721-621	721-622
KZ1000R1-R2 (ELR)	82-83	721-621	———
KZ1100B1-B2	81-82	721-621	———
KZ1100L1	1983	721-634	721-633

Suzuki

GS1000C/EC/N/EN	78-79	721-401	721-402

Universal Turn Signals

D.O.T. Approved for USA and "E" European approved. Heavy duty flexible stem is suitable for Street, Dual Sport and Scooters. Mounting is universal with wiring to fit most models. Sold in pairs.

Order No. 721-700

721-906 721-907

OEM Style Turn Signal Stems

Designed as OEM replacements. Sold each.

Honda

Model	Year	Front	Rear
CB750K0/K1/K2/K3/K4	69-74	721-906	721-907
CB1100F Super Sport	1983	721-905	721-905

Kawasaki

KZ550A1/A2	80-81	721-902	721-902
Z1/A/B-900 (Long)(STD)	73-75	721-900	721-900
Z1/A/B-900 (Short)	73-75	721-901	721-901
KZ1000A3/A3A/A4 MK11	79-80	721-902	721-902

Kawasaki Front Turn Signal Stems

Replica front turn signal stems, fit 1972-73 H2-750, and 1972 S2-350 sold as a pair. OEM part number 23051-047.

Order No. 721-909

Kawasaki H2-750 Rear Turn Signal Stem

Replica of the stock turn signal stem. Sold each.

Order No. 721-908

Tail Light Lenses, Flasher Relay & H2 Turn Signal Stay

Kawasaki H2-750 Front Turn Signal Stay Brackets

Replica of the H2-750 1972-1973 front turn signal stay brackets. Includes 2 dampers, and 2 brackets. OEM part number 23051-031 bracket and 44045-035 damper. Sold in pairs.

Order No. 721-925

Flasher Relay

Sold each. Fits the following Kawasaki models:

OEM Reference 27002-011 — **Order No.** 951-050

Model	Year
KH250A5	1976
S1A/S1B/S1C-250	73-75
S2A-350	1973
S3/S3A-400	74-75
KH400A3/A4/A5	76-78
H2B/H2C-750	74-75
Z1/Z1A/Z1B-900	73-75
KZ900A4/A5	76-77
KZ900B1 LTD	1976
KZ1000 (ALL)	77-83
KZ1100 (ALL)	81-83
KZ1300A	79-82

DT1-250/RT1-360 Tail Light Lens

Sold each. Available for the following models:

Description	Order No.
Yamaha RT1 Tail Light Lens 20-1123 1974	722-702A

Kawasaki H1/ H2/ KH Tail Light Lens

Sold each. Available for the following Kawasaki models:

OEM Ref. 23026-022 — **Order No.** 722-710

Model	Year
H1 Mach III	72-75
H2 Mach IV	72-75
KH500	1976
S Mach	72-73

Z1-900 Tail Light Lens

Sold each. Fits the following Kawasaki models:

OEM Reference 23026-023 — **Order No.** 722-709

Model	Year
G5-A/G5-B/G5-C100	73-75
KE100A5-A10	76-81
KH250A5	1976
S1A/S1B/S1C-250	73-75
S2A-350	1973
S3/S3A-400	74-75
KH400A3/A4/A5	76-78
H2B/H2C-750	74-75
Z1/Z1A/Z1B-900	73-75

Z1R-1000 Tail Light Lens

Sold each. Fits the following Kawasaki models:

OEM Reference 23026-034 — **Order No.** 722-708

Model	Year
KZ550A1/A2/A3/A4	80-83
KZ550C1/C2 LTD	80-81
KZ550D1 GPz	1981
KZ650B1/B2/B2A/B3	77-79
KZ650C1/C2/C3	77-79
KZ650D1/D1A/D2 SR	78-79
KZ650E1 LTD	1980
KZ650F1	1980
KZ650H1 CSR	1981
KZ750B1/B2/B3/B4 (2-cylinder)	76-79
KZ750H1/H2 LTD	80-81
KZ900A4/A5	76-77
KZ900B1 LTD	1976
KZ1000A1/A2/A2A	77-78
KZ1000B1/B2/B3/B4 LTD	77-80
KZ1000D1 Z1R	1978
KZ1000D3 Z1R	1980

Honda Tail Light Lens

Sold each. Available for the following models:

Description	Order No.
Honda CB400F/750 Tail Light Lense	722-715

Yamaha Tail Light Lens

Sold each. Available for the following models:

Description	Order No.
XS1/650	722-705

KEIHIN FCR Carburetors

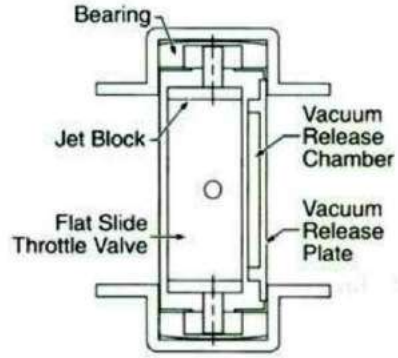

Revolutionary Throttle System -Top view of the throttle valve

Keihin FCR (Flatslide CR) Racing Carburetors

Following in their tradition of high technology and performance, Keihin's latest carburetor design for racing is the FCR designed for downdraft engine design use. Features include a flatslide throttle operating on roller bearings with progressive linkage for smooth operation and control. Smoothbore venturi for maximum air flow. This is the ultimate racing carburetor for use on downdraft engines as found on many popular sportbikes destined for serious competition. Along with the highest level of technology available, the FCR's have proven there advantage with race wins around the world.

Model	Year	Type	33mm Carb	33mm Carb Kit	35mm Carb	35mm Carb Kit	37mm Carb	37mm Carb Kit	39mm Carb	39mm Carb Kit	41mm Carb	41mm Carb Kit
Arctic Cat												
DVX400		H	—	—	—	—	—	—	—	016-855*	—	016-856*
(DVX400 carb kits come with push/pull throttle)												
BMW												
R-100R		H	—	—	—	—	016-694	—	016-695	—	—	—
(Qt 2 carburetors required for R-100R)												
F-650 Dual		H	—	—	—	—	—	—	016-653	—	—	—
Ducati												
750SS Super Sport **Dual**	91-99	D	—	—	—	—	—	—	016-650	016-720*	016-670	016-721*
750SS Super Sport **Split**	All	D	—	—	—	—	—	—	016-687	016-746*	016-689	016-747*
900SS Super Sport **Dual**	91-99	D	—	—	—	—	—	—	016-650	016-720*	016-670	016-721*
900SS Super Sport **Split**	All	D	—	—	—	—	—	—	016-687	016-746*	016-689	016-747*
900SS Super Sport **Split**	All	D/H	—	—	—	—	—	—	—	016-746A*	—	016-747A*
900M Monster **Dual**	All	D	—	—	—	—	—	—	016-650	016-722*	016-670	016-723*
900M Monster **Split**	All	D	—	—	—	—	—	—	016-687	016-746*	016-689	016-747*
900M Monster **Split**	All	D/H	—	—	—	—	—	—	—	016-746A*	—	016-747A*
Note- 900SS/900M Split kits are available with two downdraft carburetor or one horizontal and one downdraft carburetor depending on manifold configuration. Aftermarket manifolds required for split kits.												
HARLEY DAVIDSON®												
Big Twin w/K&N Air Filter	90-04	H	—	—	—	—	—	—	—	—	016-699	016-755
Big Twin without Air Filter	90-04	H	—	—	—	—	—	—	—	—	016-699	016-756
XL883 Sportster	90-04	H	—	—	—	—	—	—	016-950	016-753	—	—
XL1200 Sportster	90-04	H	—	—	—	—	—	—	016-950	016-753	—	—
USE STOCK THROTTLE CABLES FOR HARLEY-DAVIDSON® MODELS LISTED.												
Honda												
XR250R		H	—	—	016-693	—	—	—	—	—	—	—
TRX400EX	99 on	H	—	—	—	—	—	—	016-951	016-759*	016-960	016-761*
(TRX400EX carb kits come with push/pull throttle)												
XR600R	89-00	H	—	—	—	—	—	—	—	—	016-961	016-730*
NX650	88-89	H	—	—	—	—	—	—	—	—	016-961	—
XR650L w/o Choke Kit	93-07	H	—	—	—	—	—	—	—	—	016-781	016-749*
XR650L w/Choke Kit	93-07	H	—	—	—	—	—	—	—	—	016-799	016-749A
XR650R	00-07	H	—	—	—	—	—	—	—	—	016-962	016-765*

Husaberg

Model	Year	Type	33mm Carb	33mm Carb Kit	35mm Carb	35mm Carb Kit	37mm Carb	37mm Carb Kit	39mm Carb	39mm Carb Kit	41mm Carb	41mm Carb Kit
FE501		H	—	—	—	—	—	—	—	—	016-963	016-872
FS650		H	—	—	—	—	—	—	—	—	016-963	016-873

Kawasaki

KLX400 with choke	2003	H	—	—	—	—	—	—	016-798	016-864*	016-799	—
KLX400 no choke	2003	H	—	—	—	—	—	—	016-695	016-863*	016-781	—
(all KLX400 and KSF400 carb kits come with push/pull throttle)												
KSF400 (KXF400)	04-06	H	—	—	—	—	—	—	—	016-855*	—	016-856*
KLX650	93-96	H	—	—	—	—	—	—	—	—	016-963	016-868
(KLX650 kit uses stock throttle and choke cable)												
ZX750 Ninja ZX-7R	96-99	D	—	—	—	—	—	—	—	—	016-515	—
ZX900A Ninja 900R	84-86	H	—	—	—	—	—	—	016-500	—	—	—
ZX900B Ninja ZX-9R	98-99	D	—	—	—	—	—	—	—	—	016-590*	—
ZR1100	99-00	H	—	—	—	—	—	—	016-500	—	—	—
ZRX1200		H	—	—	—	—	—	—	016-500	—	—	—

See page 152 - 159 for more Carb Kits.

Carb Kit Notes:

Type of Carburetor: **H** = Horizontal **D** = Downdraft

+ Push/Pull cables required	Push/Pull Throttle only	021-280
	Push/Pull Throttle Cable Housing Length: 32"	021-281
	or Push/Pull Throttle Cable Housing Length: 37", 5" longer than **021-281**	021-281.5

Blue Part Numbers with asterisk* = Push/Pull cables included

Blue Part Numbers = Carb Only

Red Part Numbers with asterisk* = Carb Kit complete with adapters and Motion Pro Push/Pull Cable Set if required

Red Part Numbers = Carb Kit with adapters

Recommended Carburetor Size for Engine Displacement

Engine Displacement (cc)	Available FCR Carburetor (Venturi Diameter in mm)
400cc	33mm
600cc	33-35mm
750cc	35-39mm
1000cc and up	37-41mm

This is the recommended carburetor size for a 4-cylinder engine that is tuned for road race use. Stock engines should use the next smaller size and engine tuned to maximum output, may use one size larger.

IMPORTANT: Legal in California only for racing vehicles which may never be used upon a highway.

KEIHIN FCR Carburetors

KTM

Model	Year	Type	33mm Carb	33mm Carb Kit	35mm Carb	35mm Carb Kit	37mm Carb	37mm Carb Kit	39mm Carb	39mm Carb Kit	41mm Carb	41mm Carb Kit
LC4/RXC400 (97 to mid 00)		H	—	—	—	—	—	—	—	016-740*	—	—
LC4/RXC400 (mid 00-06)		H	—	—	—	—	—	—	—	016-740A	—	—
RXC/Duke 620 (94-mid 00)		H	—	—	—	—	—	—	—	—	016-963	016-739*
RXC/Duke 620 (00-mid 04)		H	—	—	—	—	—	—	—	—	016-963	016-739A*
950 Adventurer		D	—	—	—	—	—	—	—	016-875*	—	016-876*
950 Adventurer S		D	—	—	—	—	—	—	—	016-875*	—	016-876*
950 Super Enduro R		D	—	—	—	—	—	—	—	016-875*	—	016-876*

Moto Guzzi

1100 Sport	94-96	H	—	—	—	—	—	—	—	—	—	016-744*

Norton

Commando 750/850 **Dual**		H	—	—	—	016-860	—	—	—	—	—	—

Requires Amal MKII Conversion Manifolds.

Suzuki

DR350	90-99	H	—	—	016-693	—	—	—	—	—	—	—
DR-Z400E/S with choke	00-07	H	—	—	—	—	—	—	016-798	016-864*	016-799	—
DR-Z400E/S no choke	00-07	H	—	—	—	—	—	—	016-695	016-863*	016-781	—
DR-Z400SM w/choke	05-07	H	—	—	—	—	—	—	016-798	016-864*	016-799	—
DR-Z400SM no choke	05-07	H	—	—	—	—	—	—	016-695	016-863*	016-781	—
(All DR-Z400 and LT-Z400 carb kits come with push/pull throttle)												
LT-Z400 Quad	03-07	H	—	—	—	—	—	—	—	016-855	—	016-856*
SV650/S	99-02	D	—	—	—	—	—	—	—	016-762*	—	016-763*
GSX-R750 air cooled	to 92	H	—	—	—	—	—	—	016-498+	—	016-508+	—
(1100 Euro)		H	—	—	—	—	—	—	016-498+	—	016-508+	—
GSX-R750 liquid cooled	93-95	H	—	—	—	—	—	—	016-562*	—	016-584*	—
(1100 Euro)		H	—	—	—	—	—	—	016-562*	—	016-584*	—
GSX-R1100 air cooled	to 92	H	—	—	—	—	—	—	016-565+	—	016-509+	—
GSX-R1100W water	93-98	H	—	—	—	—	—	—	016-563*	—	016-585*	—

Triumph

Speed Triple	94-99	H	—	—	—	—	—	—	016-716	—	—	—
Bonneville/Thruxton	2001	H	—	—	—	—	—	—	016-654	016-877	—	—

Use stock throttle cables for Triumph models listed.

Yamaha

SR500 with choke	79-81	H	—	—	—	—	—	—	016-798	—	016-799	—
SR500 no choke	79-81	H	—	—	—	—	—	—	016-696	—	016-781	—
YZF-R6 with TPS	99-02	D	—	—	016-524	—	—	—	—	—	—	—
SRX600 Dual	1986	H	—	—	016-700	—	—	—	016-652	—	—	—
YFM660R Raptor	01-05	H	—	—	—	016-850*	—	—	—	016-851*	—	—
(YFM660R carb kits come with push/pull throttle)												
YXR660 Rhino	04-07	H	—	—	—	—	—	—	—	—	—	016-866*
TDM850 Dual	92-93	D	—	—	—	—	—	—	—	—	016-671	016-735*
TRX850 Dual	All	D	—	—	—	—	—	—	—	—	016-671	016-735*
FZR750/1000		D	—	—	—	—	—	—	016-492	—	—	—

Carb Kit Notes:

Type of Carburetor: **H** = Horizontal **D** = Downdraft

+ Push/Pull cables required	Push/Pull Throttle only	021-280
	Push/Pull Throttle Cable Housing Length: 32"	021-281
	or Push/Pull Throttle Cable Housing Length: 37", 5" longer than **021-280**	021-281.5

Carb Kit Notes:

Blue Part Numbers with asterisk* = Push/Pull cables included

Blue Part Numbers = Carb Only

Red Part Numbers with asterisk* = Carb Kit complete with adapters and Motion Pro Push/Pull Cable Set if required

Red Part Numbers = Carb Kit with adapters

IMPORTANT: Legal in California only for racing vehicles which may never be used upon a highway.

KEIHIN FCR CARBURETOR KITS FOR HARLEY-DAVIDSON®

HIGH PERFORMANCE, BOLT-ON CARBURETOR KITS SUITABLY SIZED FOR HARLEY-DAVIDSON® BIG TWIN AND SPORTSTER MODELS. KEIHIN FCR CARBS FEATURE A smoothbore venturi and accelerator pump for much improved acceleration.

Description	Year	Carb Venturi	Order No.	Description	Year	Carb Venturi	Order No.
Big Twin with K&N Air Filter	90-99	41FCR-H	016-755	XL883 Sportster	90-04	39FCR-H	016-753
Big Twin without Air Filter	90-99	41FCR-H	016-756	XL1200 Sportster	90-04	39FCR-H	016-753

Keihin FCR Single Carburetors - Sold each. Cable Mounting Brackets are shown on page 113.

Venturi Size/Type	Choke Yes/No	Spigot Order No.	Wire Bracket Order No.	Notes	Carburetor Order No.
28FCR-D	No	15E	021-125	—	016-683
39FCR-D	No	020-490	021-132	—	016-686
39FCR-D	No	020-424	021-132	—	016-687
41FCR-D	No	020-463	021-132	—	016-688
41FCR-D	No	020-454	021-132	—	016-689
28FCR-H	No	888	021-133	—	016-691
33FCR-H	No	16C	021-133	—	016-692
35FCR-H	No	020-429	021-131	—	016-693
37FCR-H	No	020-464	021-129	—	016-694
39FCR-H	No	020-457	021-129	—	016-695
39FCR-H	No	020-468	021-133	—	016-696
39FCR-H	Yes	020-468	021-133	—	016-798
41FCR-H	Yes	020-467	021-133	—	016-799
39FCR-H	Yes	020-450	021-551	Vacuum Port	016-950
39FCR-H	No	020-424	021-134	—	016-951
41FCR-H	Yes	020-467	021-133	—	016-799
41FCR-H	Yes	020-459	021-551	Vacuum Port	016-699
41FCR-H	No	020-467	021-133	—	016-781
41FCR-H	No	020-454	021-134	—	016-960
41FCR-H	No	020-453	021-134	—	016-961
41FCR-H	No	910	021-552	Left Side Bellcrank	016-962
41FCR-H	Yes	020-439	021-133	—	016-963

KEIHIN FCR Exploded View

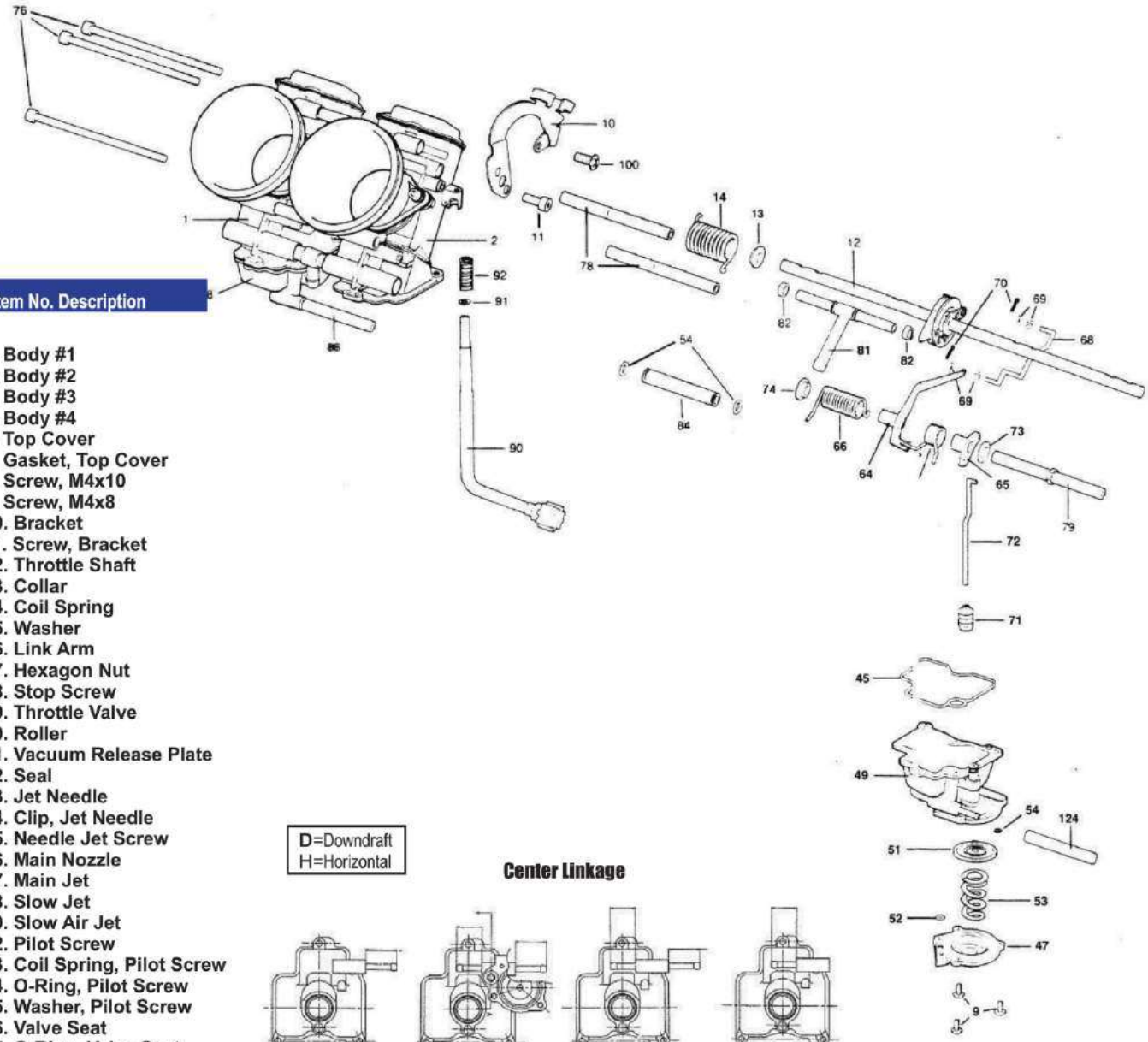

Item No. Description

1. Body #1
2. Body #2
3. Body #3
4. Body #4
5. Top Cover
6. Gasket, Top Cover
8. Screw, M4x10
9. Screw, M4x8
10. Bracket
11. Screw, Bracket
12. Throttle Shaft
13. Collar
14. Coil Spring
15. Washer
16. Link Arm
17. Hexagon Nut
18. Stop Screw
19. Throttle Valve
20. Roller
21. Vacuum Release Plate
22. Seal
23. Jet Needle
24. Clip, Jet Needle
25. Needle Jet Screw
26. Main Nozzle
27. Main Jet
28. Slow Jet
30. Slow Air Jet
32. Pilot Screw
33. Coil Spring, Pilot Screw
34. O-Ring, Pilot Screw
35. Washer, Pilot Screw
36. Valve Seat
37. O-Ring, Valve Seat
38. Screw, Valve Seat
39. Float
40. Arm Pin
41. Screw, Arm Pin
42. Float Valve
43. Clip, Float Valve
45. Packing, Float Bowl
47. Cover Acc'p
48. Float Bowl #1
49. Float Bowl #2
50. Float Bowl #4
51. Diaphragm
52. U-Ring, Acc'p
53. Coil Spring, Acc'p
54. O-Ring, Acc'p
64. Link Lever
65. Link Lever
66. Coil Spring #1, Link
67. Coil Spring #2, Link
68. Rod, Link Lever
69. Washer, Rod, Link
70. Pin, Link Lever
71. Rubber Cap
72. Rod, Acap

D=Downdraft
H=Horizontal

Center Linkage

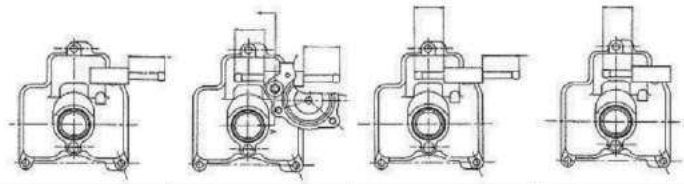

D	021-059	021-061	021-107	021-063
H	021-260	021-259	021-261	021-262

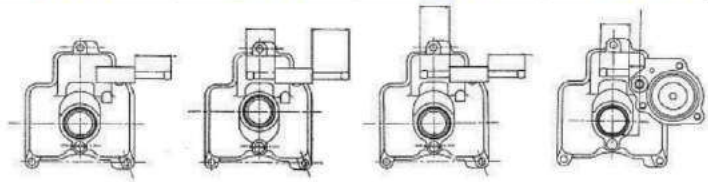

D	021-059	021-107	021-107	021-064
H	021-260	021-261	021-261	021-263

Right Linkage

Carburetors are intended for off-road riding and racing use only. Not legal for use in California or other locations where similar pollution laws may apply.

73. Washer, Link Lever
74. Collar, Link Lever
76. Bolt, M5x110
77. Spacing Collar #1
78. Spacing Collar #2
79. Spacing Collar #3
80. Rubber Pipe
81. Air Vent Joint
82. U-Ring, Air Vent
84. Fuel Joint (center)
85. O-Ring, F. T-Joint
88. Rubber Pipe (R.L.)
89. Fuel T-Joint
90. Step Screw
91. Washer, Stop Screw
92. Coil Spring, Step Screw
100. Screw, Bracket
103. Main Air Jet
121. Float Bowl #3
122. O-Ring, Drain Bolt
124. Rubber Pipe (center)
125. Mount Adapter
126. Velocity Stack
127. Rubber Cap, T-Joint
128. Clip, Rubber Cap
129. Air Cleaner Adapter
130. O-Ring, Ram Air Box Adapter

KEIHIN FCR Exploded View

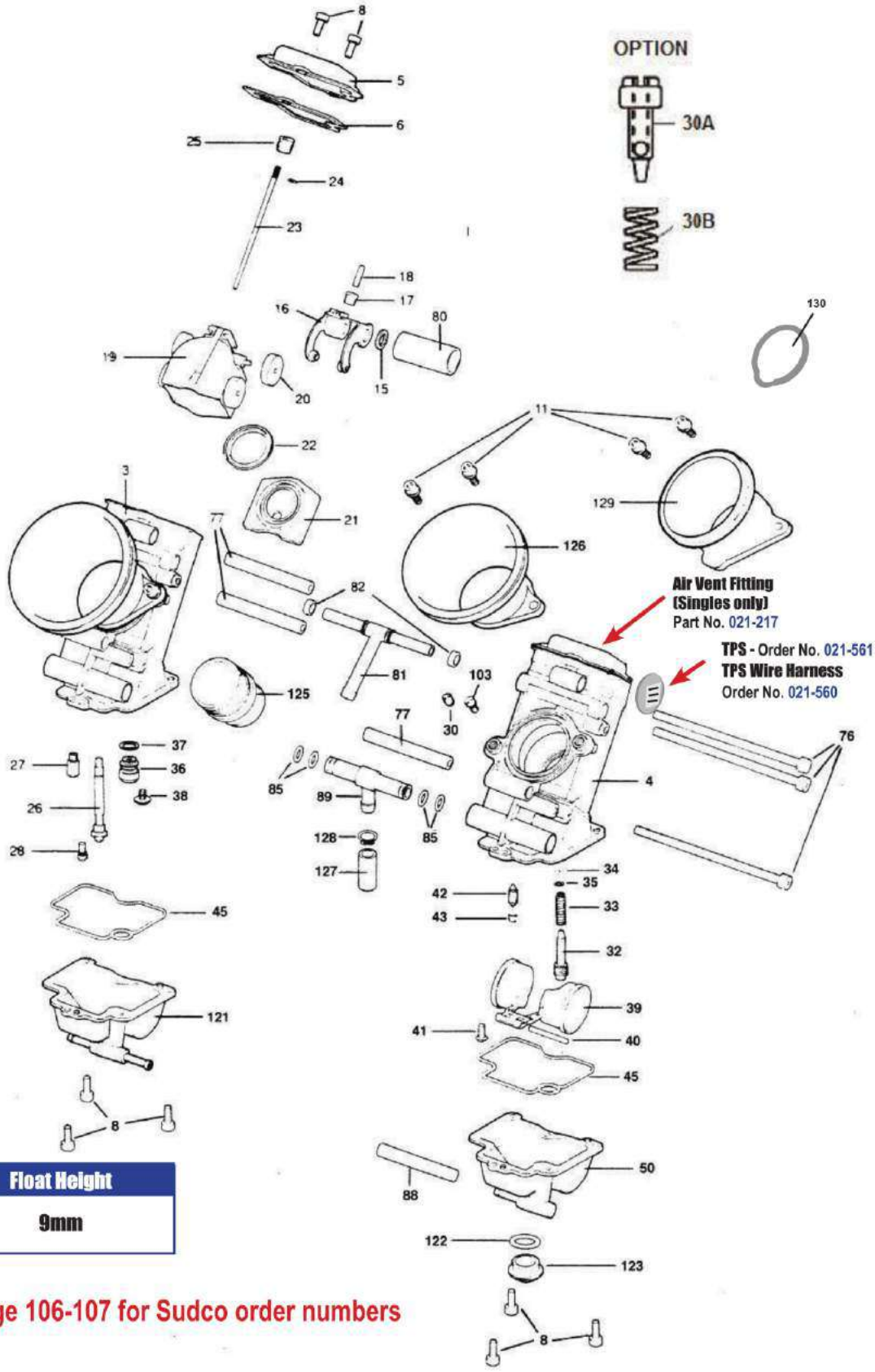

Float Height
9mm

See page 106-107 for Sudco order numbers

Carburetors are intended for off-road riding and racing use only. Not legal for use in California or other locations where similar pollution laws may apply.

KEIHIN FCR Parts

FCR Replacement Parts

Applications: Downdraft and Horizontal Single, Dual and Multi. FCR28, FCR33, FCR35, FCR37, FCR39, FCR41.

No.	Description	Application	Keihin No.	Order No.
5.	Top Cover	28-33mm	1030-850-2000	021-002
		35-41mm	1030-855-2000	021-003
6.	Gasket, Top Cover	28-33mm	1031-805-2000	021-005
		35-39mm	1031-806-2000	021-006
		41mm	1031-807-2000	021-007
8.	Screw M4 x 10 x 0.7	All	0136-807-1100	021-008
9.	Screw M4 x 8	All	0136-808-1100	021-010
10.	Cable Mounting Brackets **(For photo see page 112)**			
	CBR600F	32-33mm	1190-979-2200	021-127
	CBR600F2/F3	32-33mm	1190-979-2300	021-126
	FZR400/600, YZF600	32-33mm	1190-979-2102	021-125
	ZX-6, ZX-10, ZX-11	35-41mm	1190-981-2100	021-129
	GSX-R Air Cooled (all)	35-41mm	1190-981-2100	021-129
	Triumph, Kaw Zephyr	35-41mm	1190-981-2100	021-129
	BMW, Suz LT-Z	35-41mm	1190-981-2100	021-129
	CBR600F3	35-41mm	1190-981-2300	021-131
	CBR900RR, CB1000	35-41mm	1190-981-2200	021-131
	YZF600R, YZF1000R	35-41mm	1190-981-2200	021-131
	FZR750R, FZR1000	35-41mm	1190-981-2200	021-131
	Ducati Single/Dual	35-41mm	1190-981-2300	021-132
	SV650 (front), KTM(950 twin)	35-41mm	1190-981-2300	021-132
	SV650 (rear)	35-41mm	1190-A33-2200	021-134
	Single Carb 15° degree			
	KTM(single), XR250, SR500	41mm	1190-A33-2100	021-133
	Single Carb 30° degree			
	XR600R, TRX400EX	35-41mm	1190-A33-2200	021-134
	Yam YFM660 Raptor	39-41mm	1190-A33-2200	021-134
	BMW (Dual)	37-41mm	1190-A33-2200	021-134
	H-D Evo CV Carb (for stock cable)	41mm	1190-B12-2100	021-551
	Single Carb 30° deg.	35-41mm	1190-A33-2300	021-549
	GSX-R750 (96-97)	35-41mm	1190-A77-2000	021-550
	GSX-R Liquid Cooled	35-41mm	1190-988-2200	021-249
	Vulcan 1500	35-41mm	1190-988-2200	021-249
	Moto-Guzzi	35-41mm	1190-988-2200	021-249
	ZX-7 (91-96), ZX-9R	35-41mm	1190-988-2100	021-122
	YZF-R6	35-41mm	1190-988-2100	021-122
	XR650 Left Bellcrank	35-41mm	1190-B84-2100	021-552
11.	Screw, Bracket	All	0136-803-1100	021-012
12.	Throttle Shaft			
	Pitch 86 - 92 - 86		5025-956-2100	021-139
	Pitch 75 - 86 - 75		5025-955-2200	021-141
	Pitch 75 - 75 - 75		5025-977-2200	021-142
	Pitch 71 - 83 - 71		5025-953-2100	021-143
	Pitch 101		5025-984-2100	021-144
13.	Collar	All	1118-958-7000	021-014
14.	Coil Spring			
	standard/multi	All	1305-932-2001	021-016
	single, light multi	All	1305-942-2000	021-253
15.	Washer	All	0301-092-7000	021-018
16.	Link Arm	28-33mm	1061-815-2100	021-020
		35-41mm	1061-816-2100	021-021
17.	Hexagon Nut	All	0208-811-1100	021-023
18.	Stop Screw	All	1034-836-2000	021-025
19.	Throttle Valve	28-33mm	N501-18C02	021-300
		35-41mm	N501-20C00	021-325
20.	Roller	All	1119-803-7002	021-027
21.	Vacuum Release	28-33mm	1609-801-2101	021-029
	Plate	35-41mm	1609-802-2101	021-030
22.	Seal	28-33mm	1099-816-6001	021-032
		35-41mm	1099-817-6001	021-033

No.	Description	Application	Keihin No.	Order No.
23.	Jet Needle	28-33mm	N427-90-XXX	Pg.118
		35-41mm	N427-0C-XXX	Pg.118
24.	Clip for Jet Needle	All	0403-802-1000	018-616
25.	Needle Set Screw	All	1421-801-2000	021-034
26.	Main Nozzle	All Downdraft	1154-835-2100	021-037
		All Horizontal	1154-838-2000	021-036
27.	Main Jet	All	99101-357-XXX	Pg.150
28.	Slow Jet	All	N424-25B-XXX	Pg.148
30.	Slow Air Jet	All	99101-124-XXX	Pg.149
			99101-ZF5-XXX	(old part no.)
30A.	Air Screw	All	1014-817-2000	021-230
30B.	Coil Spring	All	16052-KM4-0040	021-235
32.	Pilot Screw	6 ° taper, All	N446-05A00	021-039
	#option	9 ° taper, All	N446-05C00	021-038
33.	Spring, Pilot Screw	All	1290-812-2001	021-041
34.	O-Ring, Pilot Screw	All	16075-KG8-9010-M1	021-043
35.	Washer, Pilot Screw	All	0301-803-2000	021-045
36.	Valve Seat	Size	N361-03-XXX	
	Use with Float Valve	018-676		
	All Downdraft	1.00	N361-03-1.00	021-218
	All Downdraft	1.20	N361-03-1.20	021-219
	All Downdraft	1.40	N361-03-1.40	021-220
	All Downdraft	1.60	N361-03-1.60	021-221
	All Downdraft	1.80	N361-03-1.80	021-222
	All Downdraft	2.00 **(Std)**	N361-03-2.00	021-223
	All Downdraft	2.20	N361-03-2.20	021-224
	All Downdraft	2.40	N361-03-2.40	021-225
	All Downdraft	2.60	N361-03-2.60	021-226
	Valve Seat	Size	N361-043-XXX	
	Use with Float Valve	018-504		
	All Horizontal	3.20 **(Std)**	N361-043-3.20	021-240
	All Horizontal	3.40	N361-043-3.40	021-241
	All Horizontal	3.60	N361-043-3.60	021-242
	All Horizontal Singles	3.80 **(Std)**	N361-043-3.80	021-243
	All Horizontal	4.00	N361-043-4.00	021-244
37.	O-Ring, Valve Seat	All	16958-397-7710-M1	021-047
38.	Screw, Valve Seat	Downdraft	0118-804-1100	021-049
		Horizontal	0118-806-1100	021-250
39.	Float	All	1052-837-2200	021-051
40.	Arm Pin	All	W9525-25250	018-670
41.	Screw, Arm Pin	All	93500-04008-1H	021-053
42.	Float Valve (Needle Valve)			
	Downdraft (1.0 - 2.6)	All	16155-ZG8-L100	018-676
	Horizontal (3.2 - 4.0)	All	1062-814-2100	018-504
43.	Clip, Float Valve	All	0405-019-1000	018-674
45.	O-Ring, Float Bowl	All	1202-846-6000	021-055
47.	Cover, Accel. Pump	All	1230-826-2001	021-057
48.	Float Bowl #1	Horizontal	1050-881-2100	021-260
49.	Float Bowl #1	Downdraft	1050-864-2100	021-059
	Float Bowl #2	Downdraft w/center pull	1050-865-2100	021-061
	Float Bowl #2	Horizontal w/center pull	1050-880-2100	021-259
	Float Bowl (single)	Downdraft	1050-868-2100	021-258
	Float Bowl (single)	Horizontal	1050-886-2100	021-264
50.	Float Bowl #4	Downdraft w/center pull	1050-866-2100	021-063
	Float Bowl #4	Downdraft w/right pull	1050-862-2100	021-064
	Float Bowl #4	Horizontal w/right pull	1050-885-2100	021-263
	Float Bowl #4	Horizontal w/center pull	1050-883-2100	021-262

No.	Description	Application	Keihin No.	Order No.
51.	Diaphragm	All	1201-858-2400	021-065
52.	U-Ring, Accel. Pump	All	W9353-36000	021-067
53.	Spring, Accel. Pump	All	1300-142-2000	021-069
54.	O-Ring, Accel. Pump	All	16178-548-0040	021-071
64.	Link Lever	28-33mm	1100-868-2100	021-073
		35-41mm	1100-870-2100	021-074
65.	Link Lever	Downdraft	1100-867-7001	021-076
		Horizontal	1100-872-7000	021-252
66.	Coil Spring #1	All	1305-933-2000	021-078
67.	Coil Spring #2			
	Downdraft	28-33mm	1305-934-2000	021-080
	Downdraft	35-41mm	1305-939-2000	021-081
	Horizontal	All	1305-952-2000	021-254
68.	Rod, Link Lever	All	1458-825-2000	021-083
	Rod, Link Lever	GSX-R (liquid cooled)	1458-827-2000	021-256
	Flat, Link Arm		1061-818-2100	021-022
69.	Washer, Rod Link	All	0301-136-7000	021-085
70.	Pin, Link Lever	All	W9251-12081	021-087
71.	Rubber Cap	All	1028-825-2001	021-089
72.	Rod	Downdraft	1458-826-2000	021-091
		Horizontal	1458-829-2000	021-255
73.	Washer, Link Lever	All	0301-114-1100	021-093
74.	Collar, Link Lever	All	W1704-241-9900	021-095
76.	Bolt M5			
	M5 x 95mm	CBR600	0136-801-1100	021-145
	M5 x 95mm	FZR400/600	0136-801-1100	021-145
	M5 x 100mm	ZX-6, ZX-7	0136-811-1100	021-147
	M5 x 100mm	ZX-10, ZX-11	0136-811-1100	021-147
	M5 x 110mm	FZR750/1000	0136-812-1100	021-149
	M5 x 90mm	(*Option)	0136-809-1100	021-146
77.	Spacing Collar #1			
	56mm	CB-1, CBR600	N704-01056	021-153
	56mm	FZR400/600	N704-01056	021-153
	60mm	ZX-6,	N704-01060	021-155
	60mm	ZX-10, ZX-11	N704-01060	021-155
	71mm	FZR750/1000	N704-01071	021-157
	50mm	(*Option)	N704-01050	021-151
	53mm	(*Option)	N704-01053	021-152
	68mm	(*Option)	N704-01068	021-156
78.	Spacing Collar #2			
	71mm	ZX-7,	N704-02071	021-161
	71mm	ZX-10, ZX-11	N704-02071	021-161
	77mm	CB-1,	N704-02077	021-163
	77mm	FZR750/1000	N704-02077	021-163
	81mm	ZX-6, CBR600	N704-02081	021-167
	81mm	FZR400/600	N704-02081	021-167
	50mm	(*Option)	N704-02050	021-158
	53mm	(*Option)	N704-02053	021-159
	68mm	(*Option)	N704-02068	021-160
	89mm	(*Option)	N704-02089	021-168
79.	Spacing Collar #3			
	71mm	ZX-10, ZX-11	N704-03071	021-171
	77mm	CB-1	N704-03077	021-173
	77mm	FZR750/1000	N704-03077	021-173
	81mm	CBR600, ZX-6	N704-03081	021-175
	81mm	FZR400/600	N704-03081	021-175
	56mm	(*Option)	N704-03056	021-169
	60mm	(*Option)	N704-03060	021-170
	65mm	(*Option)	N704-03065	021-172
	68mm	(*Option)	N704-03068	021-174
	89mm	(*Option)	N704-03089	021-176
80.	Rubber Pipe			
	34mm	CBR600	0804-985-0000	021-179
	34mm	FZR400/600	0804-985-0000	021-179
	34mm	CB-1, ZX-7	0804-985-0000	021-179
	34mm	ZX-10, ZX-11	0804-985-0000	021-179
	41mm	ZX-6	0804-990-0000	021-181
	46mm	FZR750/1000	0804-992-0000	021-183
	31mm	(*Option)	0804-988-0000	021-180

No.	Description	Application	Keihin No.	Order No.
81.	Air Vent Joint	4-cylinder	1077-826-7000	021-187
	(Breather)	Ducati (Dual)	1077-806-7001	021-188
82.	U-Ring, Air Vent	All	W9353-65000	021-097
84.	Fuel Joint (center)	CBR600, CB-1	1075-834-2000	021-191
		FZR400/600	1075-834-2000	021-191
		FZR750/1000	1075-834-2000	021-191
		ZX-7	1075-836-2000	021-193
		ZX-10, ZX-11	1075-836-2000	021-193
85.	O-Ring, Fuel T-Joint	All(Ex Ducati)	W9351-13057	018-755
	Ducati Duals Only	Duals	16178-548-0040	021-071
88.	Rubber Pipe			
	45mm (R & L side.)	CBR600, CB-1	W1785-032-9900	021-197
	45mm (R & L side.)	FZR400/600	W1785-032-9900	021-197
	60mm (R,L & C)	FZR750/1000	0804-437-0001	021-201
	60mm (R,L & C)	GSX-R750 93-95		021-201
	70mm	ZX-7	0804-986-0000	021-209
	70mm	ZX-10, ZX-11	0804-986-0000	021-209
	40mm	(*Option)	0804-444-0000	021-202
	50mm	(*Option)	0804-991-0000	021-203
	80mm	(*Option)	0804-987-0000	021-210
89.	Fuel T-Joint			
		CBR600, CB-1	1077-804-7000	018-751
		FZR400/600	1077-804-7000	018-751
		ZX-6	1077-804-7000	018-751
		ZX-10, ZX-11	1077-804-7000	018-751
		FZR750/1000	1077-803-7000	018-753
		GSX-R (liquid cooled)	1077-803-7000	018-753
		Downdraft (single)	1074-848-2100	021-251
		Ducati (Dual)	1077-844-2000	021-190
90.	Idle Speed Screw	All	1034-837-2100	021-099
		13.25"	1034-837-2501	021-531
91.	Washer	All	0301-078-1200	021-101
92.	Spring	All	1300-112-2000	021-103
100.	Screw, Bracket	All	0136-804-1100	021-105
103.	Main Air Jet	35-41mm	99101-393-XXX	Pg.150
121.	Float Bowl #2	Downdraft with right pull	1050-863-2100	021-107
	Float Bowl #3	Downdraft with center pull	1050-863-2100	021-107
	Float Bowl #2	Horizontal with right pull	1050-882-2100	021-261
	Float Bowl #3	Horizontal with center pull	1050-882-2100	021-261
122.	O-Ring, Drain Bolt	All	16075-935-0060	021-109
123.	Drain Bolt	All	1018-804-2000	021-111
124.	Rubber Pipe			
	60mm length	ZX-6, ZX-7	0804-437-0001	021-201
	60mm length	ZX-10, ZX-11	0804-437-0001	021-201
	70mm length	CBR600, CB-1	0804-986-0000	021-209
	70mm length	FZR750/1000	0804-986-0000	021-209
	80mm length	(*Option)	0804-987-0000	021-210
125.	Mounting Adapters	(Spigots)		Pg.110-111
126.	Velocity Stacks - Sold each			
	Blue, 50mm long	28-33mm	1130-806-7002	021-113
	Blue, 50mm long	35-41mm	1130-807-7000	021-114
	Red, 30mm long	35-41mm	1130-808-7000	021-115
127.	Rubber Cap, T-Joint	All	1028-808-7000	018-759
128.	Clip, Rubber Cap	All	W9535-55000	018-761
129.	Air Filter Adapters			Pg.120-121
130.	O-Ring, Air Cleaner Adapter	35-41mm		021-439

See page 109 for FCR Carburetor Rebuild Kits. See Pages 110-113 for additional FCR parts and accessories

KEIHIN FCR Single Exploded View

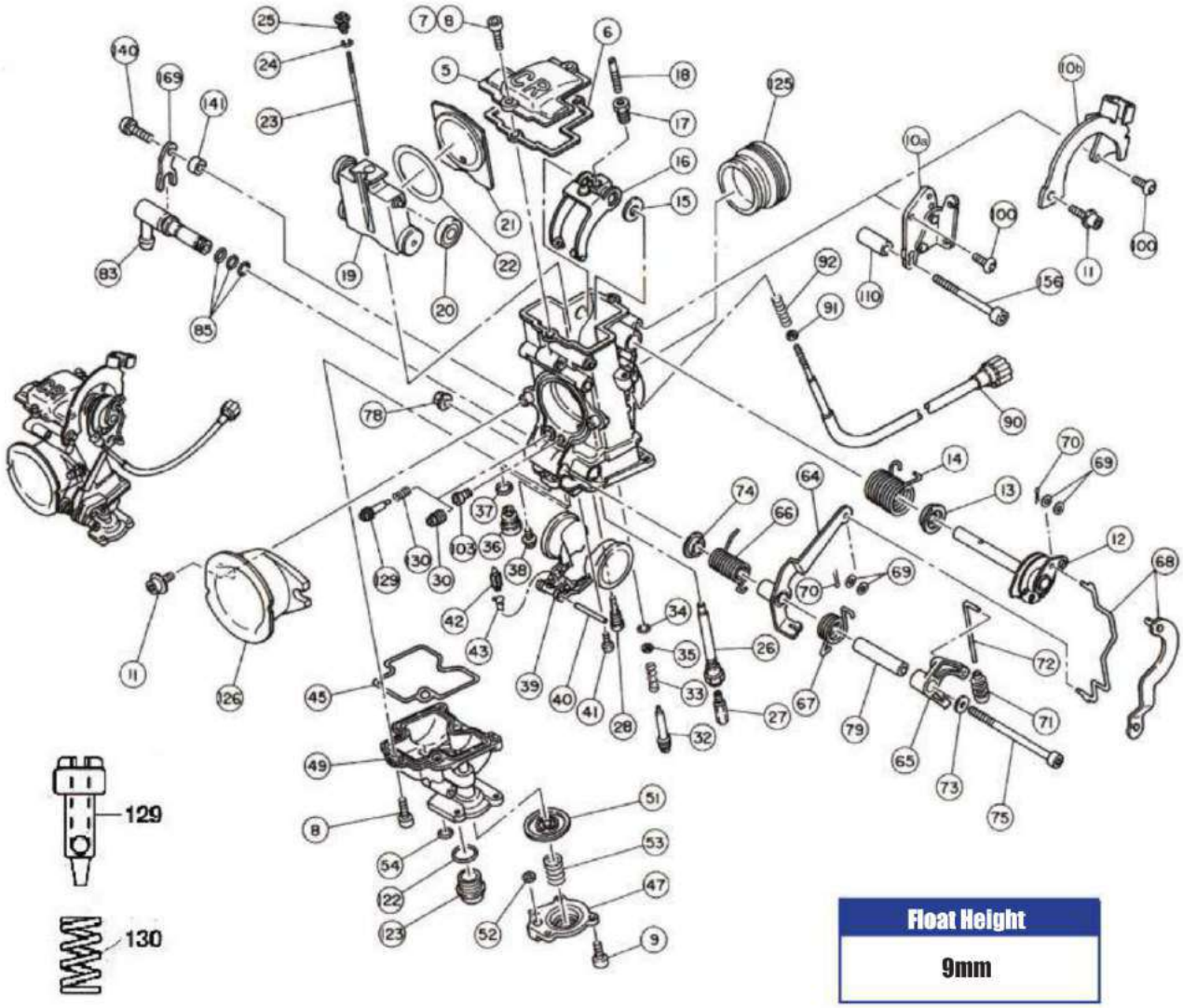

Float Height
9mm

FCR Single Replacement Parts

Applications: Downdraft and Horizontal Single Carburetors.
FCR28, FCR32, FCR33, FCR35, FCR37, FCR39, FCR41.

No.	Description	Application	Keihin No.	Order No.
5.	Top Cover	28-33mm	1030-850-2000	021-002
		35-41mm	1030-855-2000	021-003
6.	Gasket, Top Cover	28-33mm	1031-805-2000	021-005
		35-39mm	1031-806-2000	021-006
		41mm	1031-807-2000	021-007
7.	Screw M4 x 12	All	0136-806-1100	021-700
8.	Screw M4 x 10 x 0.7	All	0136-807-1100	021-008
9.	Screw M4 x 8	All	0136-808-1100	021-010
10.	Cable Mount Brackets	See Page 112 for photos and apps.		
10A.	Cable Mount Bracket	All	1190-A33-2300	021-549
10B.	Cable Mount Bracket	All	1190-981-2100	021-129
11.	Screw, Bracket	All	0136-803-1100	021-012
12.	Throttle Shaft	All	5025-960-2101	021-701
13.	Collar	All	1118-958-7000	021-014
14.	Coil Spring	All	1305-942-2000	021-253
15.	Washer	All	0301-092-7000	021-018
16.	Link Arm	28-33mm	1061-815-2100	021-020
		35-41mm	1061-816-2100	021-021
17.	Hexagon Nut	All	0208-811-1100	021-023
18.	Stop Screw	All	1034-836-2000	021-025
19.	Throttle Valve	28-33mm	N501-18C02	021-300
		35-41mm	N501-20C00	021-325
20.	Roller	All	1119-803-7002	021-027
21.	Vacuum Release	28-33mm	1609-801-2101	021-029
	Plate	35-41mm	1609-802-2101	021-030
22.	Seal	28-33mm	1099-816-6001	021-032
		35-41mm	1099-817-6001	021-033
23.	Jet Needle	28-33mm	N427-90-xxx	Pg.118
		35-41mm	N427-OC-xxx	Pg.118
24.	Clip for Jet Needle	All	0403-802-1000	018-616
25.	Needle Set Screw	All	1421-801-2000	021-034
26.	Main Nozzle	Downdraft	1154-835-2100	021-037
		Horizontal	1154-838-8000	021-036
27.	Main Jet	All	99101-357-xxx	Pg.150
28.	Slow Jet	All	N424-25B-xxx	Pg.148
30.	Slow Air Jet	All	99101-124-xxx	Pg.149
			99101-ZF5-xxx (old part no.)	

Part no. #30, Slow Air Jet can be replaced with Slow Air Screw, see Part no. #129 and #130 in drawing.

Carburetors are intended for off-road riding and racing use only. Not legal for use in California or other locations where similar pollution laws may apply.

No.	Description	Application	Keihin No.	Order No.
32.	Pilot Screw	6 ° taper, All	N446-05A00	021-039
	(*Option)	9 ° taper,	N446-05C00	021-038
33.	Spring, Pilot Screw	All	1290-812-2001	021-041
34.	O-Ring, Pilot Screw	All	16075-KG8-9010 M1	021-043
35.	Washer, Pilot Screw	All	0301-803-2000	021-045
36.	Valve Seat	Size		
	All Downdraft FCR - Use with Float Valve 018-676			
	All Downdraft	1.00	N361-03-xxx	021-218
	All Downdraft	1.20	N361-03-xxx	021-219
	All Downdraft	1.40	N361-03-xxx	021-220
	All Downdraft	1.60	N361-03-xxx	021-221
	All Downdraft	1.80	N361-03-xxx	021-222
	All Downdraft	2.00 **(Std)**	N361-03-xxx	021-223
	All Downdraft	2.20	N361-03-xxx	021-224
	All Downdraft	2.40	N361-03-xxx	021-225
	All Downdraft	2.60	N361-03-xxx	021-226
	Valve Seat	Size		
	All Horizontal FCR - Use with Float Valve 018-504			
	All Horizontal	3.20 **(Std)**	N361-04-xxx	021-240
	All Horizontal	3.40	N361-04-xxx	021-241
	All Horizontal	3.60	N361-04-xxx	021-242
	All Horizontal Singles	3.80 **(Std)**	N361-04-xxx	021-243
	All Horizontal	4.00	N361-04-xxx	021-244
37.	O-Ring, Valve Seat	All	16958-397-7710 M1	021-047
38.	Screw, Valve Seat	Downdraft	0118-804-1100	021-049
		Horizontal	0118-806-1100	021-250
39.	Float	All	1052-837-2200	021-051
40.	Arm Pin	All	W9525-25250	018-670
41.	Screw, Arm Pin	All	93500-04008-1H	021-053
42.	Float Valve (Needle Valve)			
	Downdraft (1.0 - 2.6)	All	16155-ZG8-L100	018-676
	Horizontal (3.2 - 4.0)	All	1062-814-2100	018-504
43.	Clip, Float Valve	All	0405-019-1000	018-674
45.	O-Ring, Float Bowl	All	1202-846-6000	021-055
47.	Cover, Accel. Pump	All	1230-826-2002	021-057
49.	Float Bowl	Downdraft	1050-868-2100	021-258
	Float Bowl	Horizontal	1050-886-2100	021-264
51.	Diaphragm	All	1201-858-2400	021-065
52.	U-Ring, Accel. Pump	All	W9353-3600	021-067
53.	Spring, Accel. Pump	All	1300-142-2000	021-069
54.	O-Ring, Accel. Pump	All	16178-548-0040	021-071
64.	Link Lever	28-33mm	1100-868-2100	021-073
		35-41mm	1100-870-2100	021-074
65.	Link Lever	Downdraft	1100-867-7001	021-076
		Horizontal	1100-872-7000	021-252
66.	Coil Spring #1	All	1305-933-2000	021-078
67.	Coil Spring #2			
	Downdraft	28-33mm	1305-934-2000	021-080
	Downdraft	35-41mm	1305-939-2000	021-081
	Horizontal	All	1305-952-2000	021-254
68.	Rod, Link Lever	All	1458-825-2000	021-083
	Rod, Link Lever	GSX-R liquid cooled	1458-827-2000	021-256
	Flat, Link Arm		1061-818-2100	021-022
69.	Washer, Rod Link	All	0301-136-7000	021-085
70.	Pin, Link Lever	All	W9251-12081	021-087
71.	Rubber Cap	All	1028-825-2001	021-089
72.	Rod	Downdraft	1458-826-2000	021-091
		Horizontal	1458-829-2000	021-255
73.	Washer, Link Lever	All	W1795-097-9900	021-856
74.	Collar, Link Lever	All	W1704-241-9900	021-095
75.	Bolt	All	0136-818-1100	021-702
78.	Nut	All	0208-810-1100	021-703
79.	Collar	All	1118-959-2000	021-704
83.	Fuel L-Joint	Downdraft	1074-848-2100	021-251
	Fuel L-Joint	Horizontal	1074-848-2300	021-854

No.	Description	Application	Keihin No.	Order No.
85.	O-Ring, Fuel L-Joint	All	W9351-13057	018-755
90.	Idle Speed Screw	All	1034-837-2100	021-099
91.	Washer	All	0301-078-1200	021-101
92.	Spring	All	1300-112-2000	021-103
100.	Screw, Bracket	All	0136-804-1100	021-105
103.	Main Air Jet	35-41mm	99101-393-xxx	Pg.150
110.	Collar		N704-05017	021-563
122.	O-Ring, Drain Bolt	All	16075-935-0060	021-109
123.	Drain Bolt	All	1018-804-2000	021-111
125.	Mounting Adapters	(Spigots)		Pg.111-112
126.	Velocity Stacks -	Sold each		
	Blue, 50mm long	28-33mm	1130-806-7002	021-113
	Blue, 50mm long	35-41mm	1130-807-7000	021-114
	Red, 30mm long	35-41mm	1130-808-7000	021-115
129.	Slow Air Screw	All	1014-817-2000	021-230
130.	Spring	All	16052-KM4-0040	021-235
140.	Bolt		N114-06161	021-705
141.	Collar		1118-984-2000	021-706
156.	Bolt		0136-812-1100	021-150
169.	Bracket		1190-A11-2000	021-850

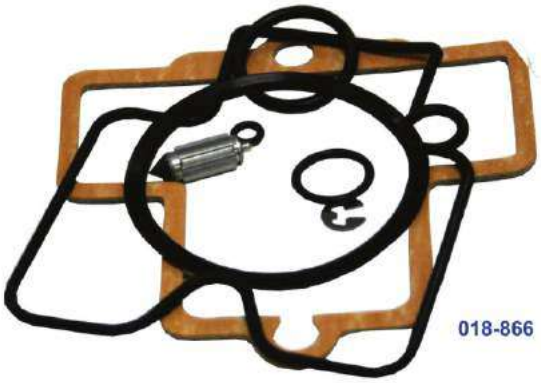

018-866

Sudco FCR Carburetor Rebuild Kits

Each kit contains genuine KEIHIN parts to rebuild one Keihin Flat-CR Smoothbore carburetor body. Order per kit needed, one or more depending on number of carbs on bike. ***Made in Japan.***

H - Horizontal Carburetor **D -** Downdraft Carburetor

Keihin Flat CR Downdraft

Application	Order No.
28-33 FCR-**D**	018-865
35-39 FCR-**D**	018-866
41 FCR-**D**	018-867

Keihin Flat CR Horizontal

28-33 FCR-**H**	018-865
35-39 FCR-**H**	018-870
41 FCR-**H**	018-871

Sudco FCR Cable Choke Assembly

For FCR single carburetor. Sold as an assembly.

Order No. 018-977 Contains the following parts:

Qt	Description
1	Starter Valve
1	Coil Spring
1	Cap
1	Rubber

KEIHIN FCR Mounting Adapters (Spigots)

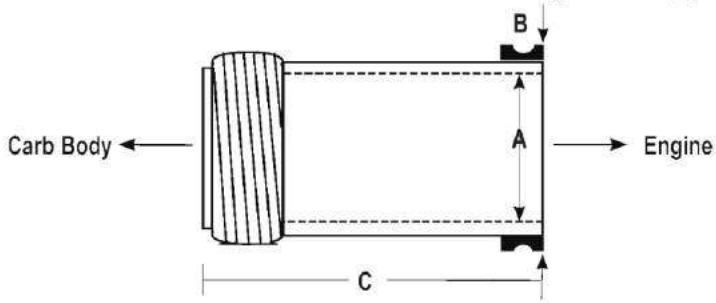

For CR Special Spigots, see page 126-127

Keihin FCR Mounting Adapters (Spigots) Sold each.

Application	Year	I.D. Mark	Spigot O.D. "B"	Port I.D. "A"	Overall Length "C"	Order No.
FCR28						
FCR28-H	STD	888	29mm	24mm	27mm	——
FCR28-D	STD	15E	33mm	27mm	25mm	——
FCR35						
Honda XR250		37A	40mm	35.65mm	26mm	020-416
Norton Commando		37A	40mm	35.65mm	26mm	020-416
Suzuki DR350	90-99	37C	42mm	35.65mm	23mm	020-429
Honda CBR600F2	91-94	37B	41mm	35mm	34mm	020-428
Honda CBR600F3	95-98	894	44mm	36.40mm	41.5mm	020-462
Yamaha SRX600	1986	877	38mm	33mm	24mm	020-466
Kawasaki ZX6		19A	42mm	36.80mm	20mm	020-420
Yamaha YFM660 Raptor	01-05		40mm	35mm	20mm	020-419
Kawasaki KZ1000		39A	42mm	36mm	40mm	020-488
Yamaha YZF-R6	99-02	19F	44mm	37.60mm	31mm	——
FCR37						
Kawasaki KZ/GPz		34A	42mm	36mm	40mm	020-487
BMW R100		873	42mm	35.50mm	30mm	020-464
FCR39						
BMW R100		872	52mm	40.01mm	30mm	020-457
Ducati (dual carb)		21D	46mm	38mm	22mm	020-422
Ducati (single carb)		27A	44.50mm	39.65mm	37mm	020-424
Honda NT 650 Hawk GT	88-91	26B	44mm	39.65mm	31mm	202-490
Honda TRX400EX		27A	44.50mm	39.65mm	37mm	020-424
Kawasaki ZX-7	91-95	862	48mm	40.30mm	18.8mm	020-460
Kawasaki ZX-10	88-90	24A	42mm	36.80mm	26mm	020-440
Suzuki DR-Z400	00-07	24A	42mm	36.80mm	26mm	020-440
Suzuki LT-Z400	03-07	24A	42mm	36.80mm	26mm	020-440
Kawasaki ZX-11C	90-93	25A	47mm	40.80mm	26mm	020-441
Kawasaki ZX-9R	94-97	25A	47mm	40.80mm	26mm	020-441
Kawasaki ZX-11D	93-01	25B	47mm	40.80mm	46mm	020-423
Suzuki GSX-R750 Air Cooled	88-92	21C	46mm	39.65mm	31mm	020-444
Suzuki GSX-R750 Water Cooled	93-95	BDE-39				020-451
Suzuki GSX-R750	96-97	21G	46mm	39.50mm	22mm	020-446
Suzuki SV650	99-02	21C	46mm	39.65mm	31mm	020-444
Suzuki GSX-R1100	91-98	868	41.50mm	37.50mm	31mm	020-455
Suzuki RF900R	94-97	26C	42mm	36mm	36mm	——
Yamaha YZF750R	94-98	21A	46mm	38mm	40mm	020-421
Yamaha FZR1000R	89-95	21B	46mm	37.65mm	40mm	020-445
Yamaha FZR1000R	87-88	26A	44mm	37.65mm	40mm	020-442
Yamaha FZR750R (OW01)		875	46mm	42mm	40mm	020-450
HARLEY-DAVIDSONÆ SPORTSTER		875	46mm	42mm	40mm	020-450
Yamaha SRX600	all	876	38mm	33mm	24mm	020-458
Yamaha SR500	78-81	880	41.70mm	37.50mm	28mm	020-468
Honda CBR900RR		21E	47mm	39mm	41.50mm	020-485
Triumph Speed Triple		26D	42mm	36mm	31mm	——
Triumph Bonneville/Thruxton/		24A	42mm	36.80mm	26mm	020-440
BMW F650		905	41.7mm	37.50mm	28mm	——
Yamaha XJR1200		24C	42mm	36.80mm	36mm	——
Kawasaki Zephyr/ZRX1100		35A	42mm	35.95mm	40mm	020-492
Kawasaki KZ/GPz		35A	42mm	35.95mm	40mm	020-492
Kawasaki Zephyr/ZRX1200		24A	42mm	36.80mm	26mm	020-440

KEIHIN FCR Mounting Adapters (Spigots)

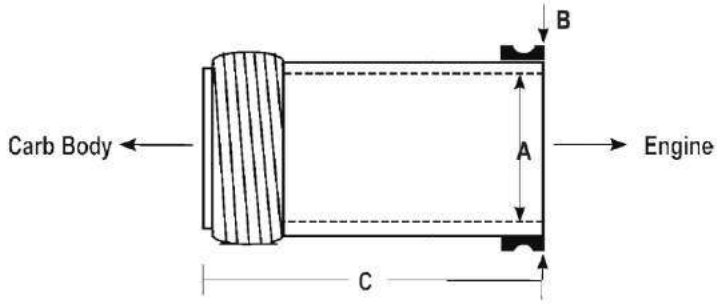

Keihin FCR Mounting Adapters (Spigots) Sold each.

FCR41

Application	Year	I.D. Mark	Spigot O.D. "B"	Port I.D. "A"	Overall Length "C"	Order No.
Ducati (dual carb)		33E	46mm	38mm	22mm	020-493
Ducati (single carb)		866	44.50mm	39.65mm	37mm	020-454
Honda TRX400EX		866	44.50mm	39.65mm	37mm	020-454
HARLEY-DAVIDSON® BIG TWIN		883	45mm	40.50mm	20mm	020-459
Honda NT650 Hawk GT88-91		865	44mm	39mm	31mm	020-463
Kawasaki ZX-7	91-95	864	48mm	41.65mm	18.80mm	020-453
Honda XR600R		864	48mm	41.65mm	18.80mm	020-453
Honda XR650R		910	49mm	43mm	27mm	———
Kawasaki ZX-11C	90-93	32A	47mm	40.8mm	26mm	020-439
Kawasaki ZX-9R	94-97	32A	47mm	40.8mm	26mm	020-439
KTM LC4		32A	47mm	40.8mm	26mm	020-439
Kawasaki ZX-11D	93-01	32B	47mm	40.8mm	46mm	020-425
Moto Guzzi		33F	46mm	40mm	32mm	———
Suzuki SV650	99-02	33B	46mm	40mm	31mm	020-489
Suzuki GSX-R750 Air cooled	88-92	33B	46mm	40mm	31mm	020-489
Suzuki GSX-R750 Water cooled	93-95	41TB	46mm	40mm	31mm	020-452
Suzuki GSX-R750 Water cooled	96-97	33H	46mm	39.5mm	22mm	020-447
Suzuki GSX-R1100 Water cooled	93-98	869	41.50mm	37.50mm	31mm	020-456
Yamaha FZR1000	89-95	33A	46mm	37.50mm	40mm	020-426
Yamaha YZF-R1	98-99	33J	46mm	40mm	35.50mm	020-486
BMW R100		874	52mm	41.50mm	29.30mm	020-465
Yamaha SR500	79-81	879	41.70mm	37.50mm	28mm	020-467
Honda CBR1100XX Blackbird		32D	50mm	41.50mm	26mm	020-475
KTM 950		32D	50mm	41.50mm	26mm	020-475
Kawasaki ZX-10		863	42mm	36.80mm	26mm	020-461
Suzuki LT-Z400	03-07	863	42mm	36.80mm	26mm	020-461
Kawasaki Zephyr/ZRX1200		863	42mm	36.80mm	26mm	020-461

KEIHIN FCR Cable Mounting Brackets

021-122

021-126

021-129

021-131

021-132

021-133

021-134

021-249

021-549

021-550

021-551

021-552

Cable Mounting Brackets For FCR Sold each.

BMW

Model	Application	Keihin No.	Order No.
BMW	35-41mm	1190-981-2100	021-129
BMW (Dual)	37-39mm	1190-A33-2200	021-134

Ducati

Ducati Single/ Dual	35-41mm	1190-981-2300	021-132

FCR Single Carburetor

Single Carb 30° deg.	35-41mm	1190-A33-2300	021-549

HARLEY DAVIDSON®

H-D Evo CV Carb (for stock cable)	41mm	1190-B12-2100	021-551

Honda

XR250R	35-41mm	1190-A33-2100	021-133
Single Carb 30° degree			
TRX400EX ATV	39-41mm	1190-A33-2200	021-134
CBR600F Hurricane	32-33mm	1190-979-2200	021-127
CBR600F2 Hurricane	32-33mm	1190-979-2300	021-126
CBR600F3 Hurricane	32-33mm	1190-979-2300	021-126
CBR600F3 Hurricane	35-41mm	1190-981-2200	021-131
XR600R	41mm	1190-A33-2200	021-134
XR650R Left Bellcrank	35-41mm	1190-B84-2100	021-552
CBR900RR	35-41mm	1190-981-2200	021-131
CB1000	35-41mm	1190-981-2200	021-131

Kawasaki

ZX-6	35-41mm	1190-981-2100	021-129
ZX-7 (91-96)	35-41mm	1190-988-2100	021-122
ZX-9R	35-41mm	1190-988-2100	021-122
ZX-10	35-41mm	1190-981-2100	021-129
ZX-11	35-41mm	1190-981-2100	021-129
ZR1100 Zephyr	37-41mm	1190-981-2100	021-129
VN1500 Vulcan 1500	35-41mm	1190-988-2200	021-249

KTM

Model	Application	Keihin No.	Order No.
KTM 950 Twin	35-41mm	1190-981-2300	021-132
KTM single	35-41	1190-A33-2100	021-133
Single Carb 30° degree			

Moto-Guzzi

Moto-Guzzi	34-41mm	1190-988-2200	021-249

Suzuki Street

LT-Z400 Quad	34-41mm	1190-981-2100	021-129
SV650 (Front)	35-41mm	1190-981-2300	021-132
SV650 (Rear)	35-41mm	1190-A33-2200	021-134
Single Carb 15° degree			
GSX-R750 96-97	35-41mm	1190-A77-2000	021-550
GSX-R750 Air Cooled (all)	35-41mm	1190-981-2100	021-129
GSX-R Liquid Cooled	35-41mm	1190-988-2200	021-249

Triumph

Triumph	35-41mm	1190-981-2100	021-129

Yamaha

FZR400	32-33mm	1190-979-2102	021-125
SR500	35-41mm	1190-A33-2100	021-133
Single Carb 30° degree			
FZR600	32-33mm	1190-979-2102	021-125
YZF600R	32-33mm	1190-979-2102	021-125
YZF600R	35-41mm	1190-981-2200	021-131
YZF-R6	35-41mm	1190-988-2100	021-122
YFM660 Raptor	39-41mm	1190-A33-2200	021-134
FZR750R	35-41mm	1190-981-2200	021-131
FZR1000R	35-41mm	1190-981-2200	021-131
YZF1000R	35-41mm	1190-981-2200	021-131
YZF-R1	35-41mm	1190-981-2200	021-131

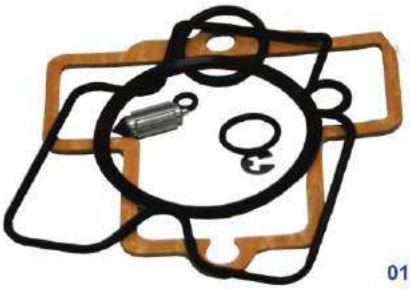

018-866

018-860

Sudco Keihin FCR Carburetor Rebuild Kits

Each kit contains genuine KEIHIN parts to rebuild one Keihin Flat-CR Smoothbore carburetor body. Order per kit needed, one or more depending on number of carbs on bike. ***Made in Japan.***

H - Horizontal Carburetor **D** - Downdraft Carburetor

Keihin Flat CR Downdraft

Application	Order No.
28-33 FCR-**D**	018-865
35-39 FCR-**D**	018-866
41 FCR-**D**	018-867

Keihin Flat CR Horizontal

28-33 FCR-**H**	018-865
35-39 FCR-**H**	018-870
41 FCR-**H**	018-871

Keihin FCR-MX Horizontal

FCR-MX37, 39, 41	020-319
FCR-MX37, 39, 41 w/ Air Cut-Off Valve/Hot Start	020-320
FCR-MX37, 39, 41 w/ Air Cut-Off Valve/Hot Start/TPS	020-321

Keihin FCR Needle Valve Seats

Valve Seat diameter should be determined according to maximum fuel flow and fuel pressure. Valve Seat only, Sold each.

All Downdraft FCR

Size	Keihin No.	Order No.
1.00	N361-03-1.00	021-218
1.20	N361-03-1.20	021-219
1.40	N361-03-1.40	021-220
1.60	N361-03-1.60	021-221
1.80	N361-03-1.80	021-222
2.00 **(Std)**	N361-03-2.00	021-223
2.20	N361-03-2.20	021-224
2.40	N361-03-2.40	021-225
2.60	N361-03-2.60	021-226
O-Ring, Valve Seat	16958-397-7710-M1	021-047
Screw, Valve Seat	0118-804-1100	021-049
Float Valve (Needle Valve)	16155-ZG8-L100	018-676
Clip, Float Valve	0405-019-1000	018-674

All Horizontal FCR

3.20 **(Std)**	N361-04-3.20	021-240
3.40	N361-04-3.40	021-241
3.60	N361-04-3.60	021-242
3.80 **(Std on singles)**	N361-04-3.80	021-243
4.00	N361-04-4.00	021-244
O-Ring, Valve Seat	16958-397-7710-M1	021-047
Screw, Valve Seat	0118-806-1100	021-250
Float Valve (Needle Valve)	1062-814-2100	018-504
Clip, Float Valve	0405-019-1000	018-674

Sudco Accelerator Pump Rebuild Kit for Keihin FCR Carburetors

Genuine "KEIHIN" replacement parts. Kits include diaphragm, spring, "u-ring," o-ring, and 4 x 8mm screws. Kits available for Keihin Downdraft & Horizontal carbs and Keihin FCR-MX carb. ***Made in Japan.***

Keihin FCR Downdraft & Horizontal Carb all

Order No. 018-860

Accelerator Pump Rebuild Kit - 8 piece Kit

Qt	OEM Reference	Description
Qt1	1201-858-2400	Diaphragm
Qt1	1300-142-2000	Spring
Qt1	W9353-36000	U Ring
Qt1	W9351-19058	O-Ring
Qt1	1028-825-2001	Rubber Cap
Qt3	0136-808-1100	4 x 8mm Screw

Sudco Methanol Conversion Kit

This Methanol Kit from Sudco includes all the necessary components: main jets, needles, needle valves, etc. All the jetting required to convert your Keihin FCR carburetor to methanol usage.

Sold as a kit. **Note: Requires experienced tuner or technician familiar with rejetting for methanol usage.**

Application	Order No.
32-33 FCR Downdraft & Horizontal	018-858
35-41 FCR Downdraft & Horizontal	018-859

950-055

950-056

950-057

FCR Carburetor Side Decals

FCR carburetor decals 4.75" x 3.125". Sold each.

Description	Order No.
FCR-35	950-055
FCR-39	950-056
FCR-41	950-057

KEIHIN FCR-MX Carburetors

FCR-MX

FCR-MX with Air Cut Valve & Hot Start

FCR-MX with Air Cut Valve, Hot Start & TPS

Keihin FCR-MX Series Off-Road Racing Carburetor

The ultimate for off-road performance. Keihin has developed an FCR carburetor designed for the specialized needs of the off-road racer. The FCR-MX carburetor has many new features to take motocross and ATV performance to the next level. These are some of the unique features of the Keihin FCR-MX for off-road applications:

- Over-flow drain joint and Tube
- Hot re-start knob
- Throttle Cable enclosure
- High capacity float chamber
- Air Cut-Off Valve (ACV) for de-acceleration enrichment (only on FCR-MX carburetors listed)
- Float chamber baffle for rough terrain
- Quad Vents

FCR-MX Sizing Guide

Venturi Size	Engine Size
37mm	250cc - 375cc
39mm	350cc - 500cc
41mm	450cc and larger

FCR-MX Standard Jetting Specifications

Carburetor	Main Jet	Main Air Jet	Slow Jet	Slow Air Jet	Jet Needle	Throttle Vlv. Cutaway	Needle Valve Seat	Float Height	Order No.
FCR-MX37	#160	#200	#45	#100	OC-EMR	1.5	3.8	9mm	016-915
FCR-MX37 w/Air Cut Valve/Hot Start	#160	#200	#45	#100	OC-EMR	1.5	3.8	9mm	016-916
FCR-MX37 w/Air Cut Valve/Hot Start/TPS	#160	#200	#45	#100	OC-EMR	1.5	3.8	9mm	016-917
FCR-MX39	#160	#200	#45	#100	OC-EMR	1.5	3.8	9mm	016-925
FCR-MX39 w/Air Cut Valve/Hot Start	#160	#200	#45	#100	OC-EMR	1.5	3.8	9mm	016-926
FCR-MX39 w/Air Cut Valve/Hot Start/TPS	#160	#200	#45	#100	OC-EMR	1.5	3.8	9mm	016-927
FCR-MX41	#160	#200	#48	#100	OC-EMR	1.5	3.8	9mm	016-935
FCR-MX41 w/Air Cut Valve/Hot Start	#160	#200	#48	#100	OC-EMR	1.5	3.8	9mm	016-936
FCR-MX41 w/Air Cut Valve/Hot Start/TPS	#160	#200	#48	#100	OC-EMR	1.5	3.8	9mm	016-937

Sudco FCR-MX Carburetor Rebuild Kits

Genuine KEIHIN replacement parts. Sold in kits.

Application	Order No.
FCR-MX	020-318
FCR-MX37, 39, 41 FCR-MX	020-319
FCR-MX37, 39, 41 with Air Cut-Off Valve/Hot Start	020-320
FCR-MX37, 39, 41 with Air Cut-Off Valve/Hot Start/TPS	020-321

Keihin FCR-MX Pilot Screw

Stock replacement pilot screw for Keihin FCR-MX carburetors. Sold each.

Size	Order No.
50mm	021-729
40mm	021-800
Individual Parts (each)	**Order No.**
Spring	021-041
Washer	021-045
O-Ring	021-043

Sudco FCR-MX Accelerator Pump Rebuild Kit

Genuine KEIHIN replacement parts. Kit include diaphragm, spring, "u-ring", o-ring, rod, and 4 x 8mm screws. Sold kit.

Application	Order No.
FCR-MX37, 39, 41 - 8 Piece Kit	018-861

Qt	Contents	Keihin No.
1	Diaphragm	1201-858-2700
1	Spring	1300-142-2000
1	U-Ring	W9353-36000
1	O-Ring	W9351-19058
1	Rod	1458-858-201
3	4 x 8mm Screw	0136-808-1100

Tokyomods FCR-MX Fuel Mixture Screw

Easily adjust the fuel mixture on your Keihin FCR carburetor. Dual O-rings to keep it in place. Machined from 6061 aluminum.

Application	Color	Order No.
Keihin FCR-MX	Red	024-200R
Keihin FCR-MX	Blue	024-200B
Keihin FCR-MX	Black	024-200K
Keihin FCR-MX	Mag	024-200M

Sudco FCR-MX Air Cut-Off Valve Set

Genuine KEIHIN replacement parts. Three piece set includes diaphragm, spring and u-ring.

Order No. 018-900

Qt	Contents	Keihin No.
1	Diaphragm	W1470-MW0-7500
1	Spring	120-A19-2000
1	U-Ring	W9353-36000

024-210M 024-210R

Tokyomods FCR-MX Billet Hot Start Nut

Replaces fragile plastic stock nut, and includes new o-ring. Machined from 6061 aluminum.

Application	Color	Order No.
Keihin FCR-MX	Red	024-210R
Keihin FCR-MX	Blue	024-210B
Keihin FCR-MX	Black	024-210K
Keihin FCR-MX	Mag	024-210M

Tokyomods FCR-MX Less Tension Throttle Spring

This low tension throttle return spring is designed to reduce the stiff feeling in your bike, or ATV throttle. Sold each.

Application	Year	Order No.
Keihin FCR-MX		024-220
Honda TRX450R	06-09	024-221

Tokyomods FCR-MX Sump (Drain Plug)

Keeps all fuel contaminates including water away from the main jet, helps control fuel slosh and bogging, won't get distorted from over tightening, and easy to reach for quicker jetting changes. Machined from 6061 aluminum. Also fits Keihin PJ, PWK, PWM, and PE carbs.

Application	Color	Order No.
Keihin FCR-MX	Red	024-230R
Keihin FCR-MX	Blue	024-230B
Keihin FCR-MX	Black	024-230K
Keihin FCR-MX	Mag	024-230M

KEIHIN FCR-MX Exploded View

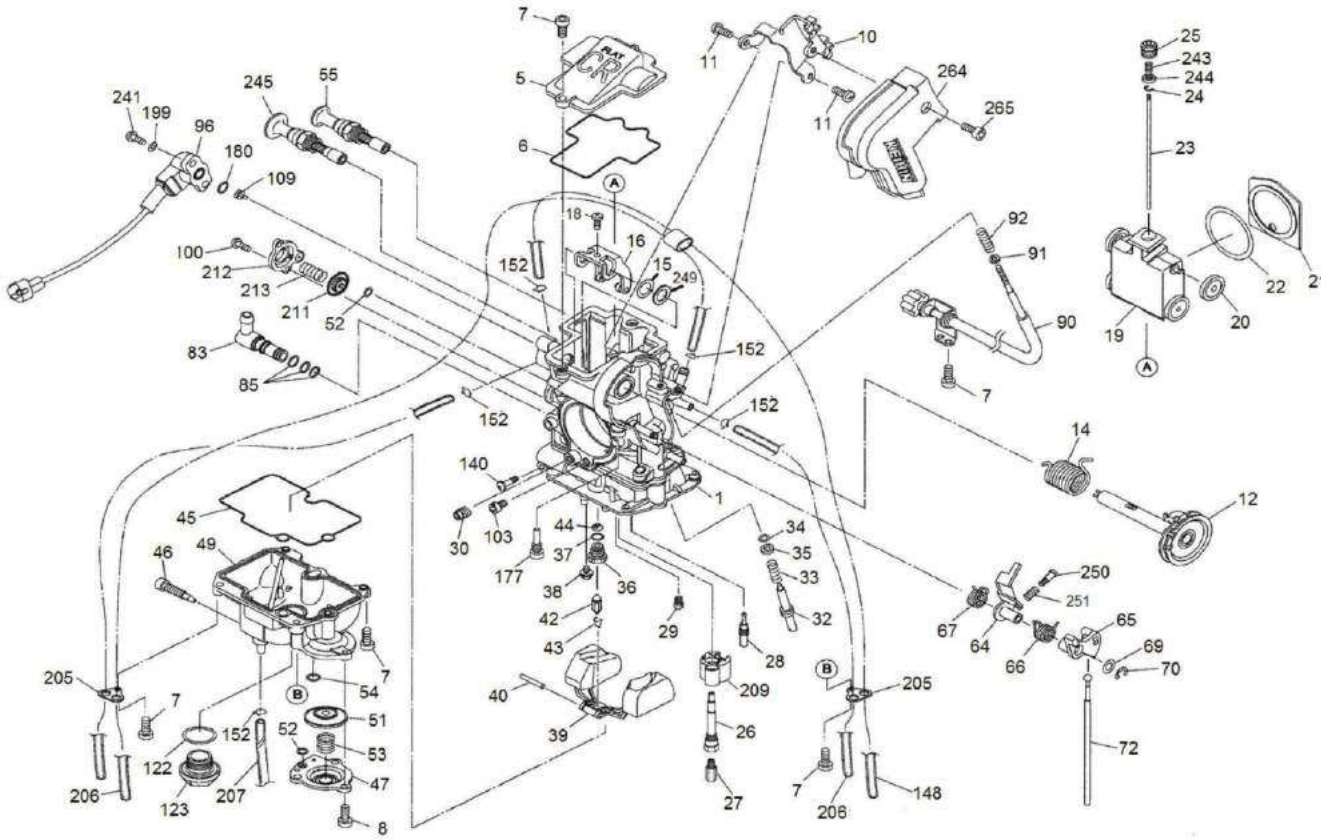

Carburetors are intended for off-road riding and racing use only. Not legal for use in California or other locations where similar pollution laws may apply.

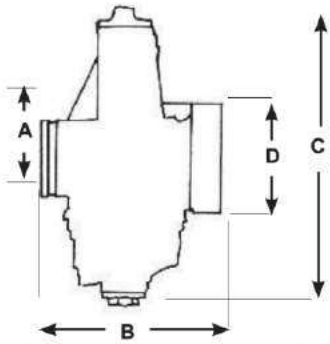

Float Height
9mm

FCR-MX Carburetor Dimensions

Size	A	B	C	D	Total Width
FCR-MX37	48	63.5	191.8	—	120.8
FCR-MX39	48	63.5	191.8	—	120.8
FCR-MX41	48	63.5	191.8	—	120.8

FCR-MX Replacement Parts

Applications: FCR-MX37, FCR-MX39, FCR-MX41.

No.	Description	Application	Keihin No.	Order No.
5.	Top Cover	All	1030-897-2000	021-710
6.	Gasket, Top Cover	All	1202-895-6000	021-711
7.	Screw M4 x 12mm	All	0136-806-1100	021-700
8.	Screw M4 x 8mm	All	0136-808-1100	021-010
10.	Bracket	All	1190-840-2101	021-712
			1190-B40-2100	
11.	Screw 5 x 8mm	All	93500-05008-1H	021-713
12.	Throttle Shaft	All	5025-B35-2201	———
14.	Coil Spring	All	1305-A83-2000	021-718
15.	Washer	All	0301-092-700	021-018
16.	Link Arm Complete	All	1061-831-2101	021-721
18.	Stop Screw	All	4110-825-1100	021-723
19.	Throttle Valve	All	N501-49C01	021-320
	(Throttle Valve requires qt1 of part #20, Roller **021-027**)			
20.	Roller	All	1119-803-7002	021-027
21.	Vaccum Release Plate	All	1609-809-2100	021-725
22.	Seal	All	1099-817-2001	021-033
23.	Jet Needles	All	N427-OC-XXX	Pg.118
24.	Clip, Jet Needle	All	0403-802-1000	018-616
25.	Needle Set Screw	All	1421-802-2000	021-727
26.	Main Nozzle	All	1154-842-2000	021-728
27.	Main Jet	All	99101-357-XXX	Pg.150
28.	Slow Jet	All	N424-21-XXX	Pg.148
29.	Starter Jet	All	99101-393-XXX	Pg.150
30.	Slow Air Jet	All	99101-124-XXX	Pg.149
	Part #30 can be replaced with Slow Air Screw.			Pg.149
30.	Slow Air Jet (some OEM)		N424-33-XXX	Pg.148
32.	Pilot Screw 40mm	All	N446-07A00	021-800
32A.	Pilot Screw 50mm	All	N446-26A00	021-729
33.	Spring, Pilot Screw	All	1290-812-2001	021-041

FCR-MX Replacement Parts

Applications: FCR-MX37, FCR-MX39, FCR-MX41.

No.	Description	Application	Keihin No.	Order No.
34.	O-Ring, Pilot Screw	All	16075-KG8-9010-M1	021-043
35.	Washer, Pilot Screw	All	0301-803-2000	021-045
36.	Valve Seat **(will not work on some OEM)**			
	3.20	All	N361-043-3.20	021-240
	3.40	All	N361-043-3.40	021-241
	3.60	All	N361-043-3.60	021-242
	3.80	All **(Std)**	N361-043-3.80	021-243
	4.00	All	N361-043-4.00	021-244
37.	O-Ring, Valve Seat	All	16958-397-7710-M1	021-047
38.	Screw, Valve Seat	All	0118-806-1100	021-250
39.	Float	All	1052-856-2100	018-202
40.	Arm Pin	All	W9525-25250	018-670
42.	Float Valve	All	1062-814-2101	018-504
43.	Clip, Float Valve	All	0405-019-1000	018-674
44.	Fuel Screen	All	2009-811-2100	021-730
45.	Packing, Float Bowl	All	1202-896-6000	021-731
46.	Drain Screw	All	1198-810-2002	021-733
47.	Cover, Accel. Pump	All	1230-826-2002	021-057
49.	Float Bowl	All	1050-948-2101	021-734
49a.	Float Bowl w/leak jet Boss	All	1050-948-2101	021-734A
51.	Diaphragm	All	1201-858-2700	021-735
52.	U-Ring, Accel. Pump	All	W9353-36000	021-067
53.	Spring, Accel. Pump	All	1300-142-2000	021-069
54.	O-Ring, Accel. Pump	All	16178-548-0040	021-071
55.	Cold Starter Valve	All	1166-844-2100	021-737
64.	Link Lever	All	1100-914-2100	021-739
65.	Link Lever	All	1100-915-7000	021-740
66.	Coil Spring #1	All	1305-B01-2001	021-719
67.	Coil Spring #2	All	1305-A82-2000	021-717
69.	Washer	All	W1795-223-9900	021-741
70.	E-Clip	All	16179-676-3000	021-742
72.	Rod	All	1458-858-2001	021-743
83.	Fuel Joint	All	1074-892-2100	021-744
85.	O-Ring, Fuel Joint	All	W9351-13057	018-755
90.	Idle Speed Screw	All	1034-815-4500	021-745
91.	Washer	All	0301-078-1200	021-101
92.	Spring	All	1300-112-2000	021-103
96.	Throttle Position Sensor (TPS)		1614-862-2100	021-746
100.	Screw M4 x 8mm	All	0136-804-1100	021-105
103.	Main Air Jet	All	99101-393-xxx	Pg.150
109.	Collar	All	16145-MZ2-7800	021-747
122.	O-Ring	All	16173-001-0040	018-664
123.	Drain Bolt	All	16162-ND4-7511-M1	018-128
140.	Screw	All	0110-804-1200	021-749
148.	Vent Hose	All	0803-884-0100	021-751
152.	Hose Clip	All	W9535-3500	018-098
177.	Stop Screw	All	1034-905-2000	021-722
180.	O-Ring	All	16978-ZB9-0050	021-732
199.	Washer	All	0301-261-36G5	021-753
205.	Hose Retainer	All	16179-KZ4-6900	018-505
206.	Vent Hose	All	0803-878-0000	021-750
207.	Vent Hose	All	95003-07033-31	021-752
209.	Buffer Plate	All	1157-812-7000	021-754
211.	Diaphragm	All	W1470-MW0-7500	021-736
212.	Cover	All	1230-850-2000	021-755
213.	Spring	All	1290-A19-2000	021-715
241.	Screw (Torx)	All	0137-261-36G5	021-757
243.	Spring	All	1290-A65-2000	021-716
244.	Collar	All	1118-B36-2000	021-748
245.	Hot Start Valve	All	1166-845-2100	021-738
249.	Washer	All	W1795-164-9900	021-758
250.	Stop Screw	All	16124-KR3-6010-M1	021-724
251.	Coil Spring	All	16053-KT7-0030	021-720
264.	Cover	All	1230-869-7001	021-756
265.	Cover Screw	All	0136-839-1100	021-759

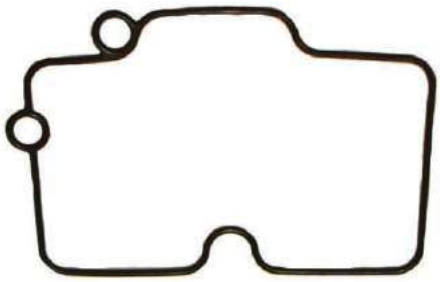

Sudco OEM FCR-MX Float Bowl O-Ring

Genuine KEIHIN replacement part. Sold each. ***Made in Japan***

Order No. 021-731

Honda

Application	Year
CRF250R	04-09
CRF250X	04-09
CRF250X	2012
CRF450R	02-08
CRF450X	05-09
CRF450X	2012

Kawasaki

KX250N1/N2 (KX250F)	04-05
KX250T6F/T7F/T8F/W9F/XAFB (KX250F)	06-10
KLX450A8F/A9F	08-09
KX450D6F/D7F/D8F (KX450F)	06-08

KTM

250 SX-F	05-10
250 SXS	2004
250 XC-F Cross Country	07-09
250 XC-W Enduro	06-09
250 XC-W Champions Edition	2010
250 XC-W Six Days	2011
400 EXC-G Racing	04-06
400 EC-W	07-09
450 EXC	10-11
450 EXC-G Racing	04-06
450 EXC-R	2008
450 SMR Supermoto	06-09
450 SX (RFS)	04-06
450 SX-F	07-12
450 XC Cross Country	06-07
450 XC-F	08-09
450 XC-W	09-11

Suzuki

RM-Z250K4-L0	04-10
RM-Z450K5/K6/K7	05-07

Yamaha

WR250FN-FY	02-09
WR250FA/FB	11-12
YZ250FN-FDL/FDW (YZ250F)	02-13
WR400FM	2000
WR426FN/FP	01-02
YZ426FM/FN/FP (YZ426F)	00-02
WR450FR/FS/FT/FV/FW/FX/FY	03-11
YZ450FR/FS/FT/FV/FW/FX (YZ450F)	03-08
YZ450FXL/FXW/FYL/FYW (YZ450F)	08-09
YZ450FSPV 50Th Anniversary	2006

KEIHIN FCR Jet Needles

N427-90 FCR 28-33mm

E	T	V
Taper	L1	Diameter

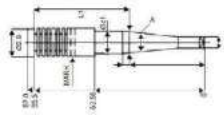

Operations affected by needle selection

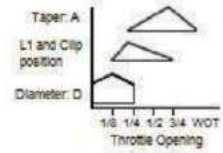

Rich ← 1/8 to 1/4 Throttle → Lean

LEAN ↑ 1/4 to 3/4 Throttle ↓ Rich

Taper (A) in degrees	(L1)Length in mm		M=2.715	N=2.725	P=2.735	R=2.755	S=2.765	T=2..775	U=2.785	V=2.795
			Diameter (d-1)mm							
		RICH								
E	B=58.70	↑	—	—	—	EBR/017-199	—	EBT/017-200	—	EBV/017-201
1° 0'	K=62.30	↕	—	—	—	EKR/017-202	—	EKT/017-203	—	EKV/017-204
	T=65.90	↓	—	—	—	ETR/017-205	—	ETT/017-207	—	ETV/017-209
		LEAN								
		RICH								
F	B=58.70	↑	—	—	—	—	—	—	—	FBV/017-211
1° 15'	K=62.30	↕	—	—	—	FKR/017-212	—	FKT/017-213	—	FKV/017-214
	T=65.90	↓	—	—	—	FTR/017-215	—	FTT/017-217	—	FTV/017-219
		LEAN								
		RICH								
G	B=58.70	↑	GBM/017-220	—	GBP/017-221	—	—	—	—	—
1° 30'	K=62.30	↕	GKM/017-225	—	GKP/017-226	GKR/017-227	—	—	—	—
	T=65.90	↓	—	—	—	GTR/017-230		GTT/017-232	—	GTV/017-234
		LEAN								

N427-0C FCR 35-41mm, FCR-MX

E	M	P
Taper	L1	Diameter

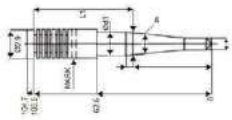

Operations affected by needle selection

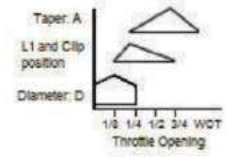

Rich ← 1/8 to 1/4 Throttle → Lean

LEAN ↑ 1/4 to 3/4 Throttle ↓ RICH

Taper (A) in degrees	(L1)Length in mm		H=2.675	K=2.695	L=2.705	M=2.715	N=2.725	P=2.735	Q=2.745	R=2.755	S=2.765	T=2.775	U=2.785	V=2.795	W=2.805
	B=74.65	RICH	—	DBK/017-276	—	DBM/017-277	—	DBP/017-278	—	DBR/017-279	—	—	—	—	—
	F=76.45	↑	—	DFK/017-283	—	DFM/017-284	DFN/017-285	DFP/017-286	—	DFR/017-287	—	DFT/017-288	—	—	—
D	H=77.35	↕	—	—	—	—	—	—	—	—	—	—	—	—	—
0°45'	K=78.25	↕	—	—	—	—	—	—	—	—	—	—	—	—	—
	L=78.70	↕	—	—	—	—	—	—	—	—	—	—	—	—	—
	M=79.15	↓	—	—	DML/017-290	DMM/017-291	DMN/017-292	DMP/017-294	—	DMR/017-296	DMS/017-297	DMT/017-298	—	DMV/017-299	—
	V=82.75	LEAN	—	—	—	DTM/017-300	DVP/017-304	DVQ/017-301	DVR/017-302	DVS/017-303	DVT/017-305	—	—	—	
	B=74.65	RICH	—	EBK/017-361	—	—	—	—	—	EBR/017-362	—	EBT/017-363	—	EBV/017-364	—
	F=76.45	↑	EFH/017-375	EFK/017-376	EFL/017-378	EFM/017-379	EFN/017-380	EFP/017-366	—	EFR/017-367	—	EFT/017-368	—	EFV/017-369	—
E	H=77.35	↕	—	—	—	—	—	—	—	EHR/017-247	—	—	—	—	—
1° 0'	K=78.25	↕	—	—	—	—	—	EKP/017-685	—	EKR/017-686	—	—	—	—	—
	L=78.70	↕	—	—	—	—	—	—	ELQ/017-249	ELS/017-250	ELT/017-251	—	ELV/017-253	ELW/017-254	
	M=79.15	↓	—	EMK/017-259	EML/017-260	EMM/017-261	EMN/017-262	EMP/017-284	EMQ/017-265	EMR/017-266	EMS/017-267	EMT/017-268	EMU/017-269	EMV/017-270	EMW/017-272
	V=82.75	LEAN	—	—	—	—	—	—	EVQ/017-273	EVR/017-274	EVS/017-275	—	—	—	—
	B=74.65	RICH	FBH/017-384	FBK/017-385	—	FBM/017-308	—	FBP/017-310	—	FBR/017-387	—	FBT/017-388	—	FBV/017-386	—
	F=76.45	↑	—	—	—	—	—	—	—	—	—	—	—	—	—
F	H=77.35	↕	—	—	—	FHM/017-394	FHN/017-315	FHP/017-395	—	FHR/017-397	—	FHT/017-316	—	FHV/017-317	—
1° 15'	K=78.25	↕	—	—	—	—	FKN/017-389	FKP/017-390	—	FKR/017-391	—	—	—	—	—
	L=78.70	↕	—	—	—	—	—	—	—	—	—	—	—	—	—
	M=79.15	LEAN	—	FMK/017-319	FML/017-320	—	FMN/017-322	FMP/017-324	FMQ/017-325	FMR/017-326	—	FMT/017-328	FMU/017-329	FMV/017-330	FMW/017-331
	B=74.65	RICH	—	—	—	—	—	—	—	—	—	—	—	—	—
	F=76.45	↑	—	—	—	—	—	GFP/017-337	—	GFR/017-338	—	GFT/017-339	—	GFV/017-340	—
G	H=77.35	↕	—	—	—	—	—	—	—	—	—	—	—	—	—
1° 30'	J=77.80	↕	—	—	—	GJM/017-348	—	—	—	—	—	—	—	—	—
	K=78.25	↕	—	—	—	—	—	—	—	—	—	—	—	—	—
	L=78.70	↕	—	—	—	—	—	GLP/017-345	—	—	—	—	—	—	—
	M=79.15	LEAN	—	—	GML/017-350	GMM/017-351	GMN/017-352	GMP/017-354	—	GMR/017-356	—	GMT/017-358	—	—	—

Keihin FCR Throttle Cables

Throttle cables designed to fit Keihin FCR carburetors.
Available in Kits (throttle with push/pull cables), Push/Pull Cable Sets, Throttle only and individual push or pull cable.

Ducati

Application	Year	Throttle with Push/Pull Cables (Kit)	Push/Pull Throttle Cable Set	Push/Pull Throttle Only	Pull Throttle Cable Only	Push Throttle Cable Only
750/900SS with dual carbs	93-95	021-285	021-285A	021-280	———	———
M900 Monster with dual carbs		021-286	021-286A	021-280	———	———
SS/M900 Monster (Singles)		021-284	021-284A	021-280	———	———

Dinosaur Class Superbikes with Tubular Handlebars

Dinosaur Class (Vintage)		005-230	———	005-230C	005-230A	005-230B

Honda

CBR600F	87-90					
CBR600F2 Hurricane	91-94	———	021-294	———	021-294A	021-294B
XR600R		———	021-298	———	021-298A	021-298B
XR650L Dual Sport	93-	———	021-903	———	021-903A	021-903B
XR650R	00-	———	021-945	———	021-945A	021-945B
CBR900RR	93-99	———	021-295	———	021-295A	021-295B

Kawasaki

ZX600F Ninja ZX-6R	95-97	———	021-900	———	021-900A	021-900B
ZX600 Ninja ZX-6R	2000	———	021-901			
ZX7 Ninja ZX-7	96-99	———	021-282	———	021-282A	021-282B
ZX900B Ninja ZX-9R	94-97	———	021-282	———	021-282A	021-282B
ZX900 Ninja ZX-9R	98-00	———	021-901	———	———	———
ZX1100C Ninja ZX-11	90-93	———	021-268	———	021-268A	021-268B
ZX1100D Ninja ZX-11	93-01	———	021-268	———	021-268A	021-268B

KTM

620RXC & Duke with unitized throttle kill assembly.			021-291	———	021-291A	021-291B
620RXC & Duke with separate kill assembly.			021-281	021-280	———	———
950 Adventure		———	———	021-965	———	———

Moto-Guzzi

1100 Sport		———	021-905	———	021-905A	021-905B

Norton

750/850 Commando		———	021-940	021-280	———	———

Suzuki

GSX-R600W	92-93	———	021-297	———	021-297A	021-297B
GSX-R600	97-99	———	021-267	———	021-267A	021-267B
RF600	94-96	———	021-288	———	021-288A	021-288B
SV650		———	021-932	———	021-932A	021-932B
GSX-R750 air cooled	89-92	———	021-281	021-280	———	———
GSX-R750W	93-95	———	021-297	———	021-297A	021-297B
GSX-R750	96-97	———	021-267	———	021-267A	021-267B
RF900	94-97	———	021-288	———	021-288A	021-288B
GSX-R1100 air cooled	89-92	———	021-281	021-280	———	———
GSX-R1100W	93-98	———	021-297	———	021-297A	021-297B

Universal

Sportbike		———	021-281	021-280	———	———
ATV & Dirtbike		———	021-281.5	021-280	———	———

Yamaha

FZR400R	88-90	———	021-290	———	021-290A	021-290B
FZR600	89-99	———	021-290	———	021-290A	021-290B
YZF600R	94-95	———	021-293	———	———	———
Rhino 660		———	021-963	———	———	———
FZR750R	87-88	———	021-292	———	021-292A	021-292B
FZR1000R	87-90	———	021-292	———	021-292A	021-292B
FZR1000R	91-95	———	021-293	———	———	———
YZF-R1		———	021-930	———	———	———

KEIHIN FCR Air Filters & Adapters

021-211

021-612

021-213

021-214

021-215

021-216

021-600

021-601

021-601A

021-212

021-613

021-614

Sudco FCR Air Cleaner/Airbox Adapters Sold each.

Carburetor Venturi Size (mm)	Filter Mounting Flange Dimension	Length	Order No.
FCR28 - FCR33	2-1/4" (57mm)	28mm	021-211
FCR35 - FCR41	2-7/16" (66mm oval)	28mm	021-212
FCR35 - FCR41	2-1/4" (57mm)	40mm	021-213
FCR35 - FCR41	2 bolt to Kawasaki Airbox	39mm	021-214
FCR35 - FCR41	2-11/16" (68mm)	28mm	021-215
FCR35 - FCR41	2-3/8" (60.3mm)	26mm	021-216
FCR35 - FCR41	(58.8mm)	26mm	021-216A

Carburetor Venturi Size (mm)	Filter Mounting Flange Dimension	Length	Order No.
FCR35 - FCR41	Raptor (O.D.52mm)	27mm	021-600
FCR35 - FCR41	FCR to H-D CV 3 Bolt Big Twin	34mm	021-601
FCR35 - FCR41	883/1200 Sportster	31.5mm	021-601A
FCR35 - FCR41	TRX450/XR650R (O.D.62.4mm)	49mm	021-612
FCR35 - FCR41	YFZ450 (O.D. 58.3mm)	23.5mm	021-613
FCR35 - FCR41	FCR-MX OEM (O.D. 56mm)	21.5mm	021-614

Sudco FCR Air Filter Applications

Ducati

Model	Year	FCR Carb (mm) Venturi Size	Air Filter Adapter	Qt Req'd	K&N Ref.	Order No.	(Comments)	Qt Req'd
750/900SS Supersport	91-99	39, 41mm	021-212	2	DU-0900	005-192	fits stock airbox	1
M750/M900 Monster	95-99	39, 41mm	021-212	2	DU-0900	005-192	fits stock airbox	1

Honda

XR250R	all	35mm	021-213	1	HA-1312	———	fits stock airbox	———
TRX400EX	all	39, 41mm	021-213	1	———	———	fits stock airbox	———
TRX450R	04-05	39, 41mm	021-612	1	———	———	fits stock airbox	———
XR600R	89-99	39, 41mm	021-213	1	HA-1312	———	fits stock airbox	———
XR650L	93-97	41mm	021-216	1	———	———	fits OEM filter	———
XR650R	00-04	41mm	021-612	1	———	———	fits OEM filter	———
CBR600F Hurricane	87-90	32, 33mm	021-211	4	RU-3000	005-178	individual pods	2
		———	———	———	RU-3010	005-179	individual pods	2
CBR600F2 Hurricane	91-94	32, 33mm	021-211	4	RU-3000	005-178	individual pods	2
		———	———	———	RU-3010	005-179	individual pods	2
CBR600F2 Hurricane	91-94	32, 33mm	021-211	4	RU-2852	005-187	dual filter kit	1
CBR600F2 Hurricane	91-94	35mm	021-212	4	RU-2952	005-174	dual filter kit	1
CBR600F2 Hurricane	95-98	35mm	021-212	4	RU-2952	005-174	dual filter kit	1
CBR900RR	94-99	39, 41mm	021-212	4	RU-2952	005-174	dual filter kit	1
CBR1100XX Blackbird		39, 41mm	021-212	4	RU-2952	005-174	dual filter kit	1

Kawasaki

KLX250R (kickstart)	94-96	35mm	021-213	1	———	———	fits stock airbox	———
KLX250S with electric start	07-08	35mm	021-216	1	———	———	fits stock airbox	———
KLX300R (kickstart)	97-07	35mm	021-213	1	———	———	fits stock airbox	———
ZX6D, ZX6E	88-97	35mm	021-212	4	RU-2952	005-174	dual filter kit	1
ZX600F Ninja ZX-6R	95-97	35mm	021-214 ram air	4	KA-6095	005-395	fits stock airbox	1
KLX650	all	41mm	021-216	1	———	———	fits stock airbox	———

KEIHIN FCR Air Filters, Adapters & Adapter O-Ring

FCR Air Cleaner Adapter O-ring

to be used with FCR35-41mm air filter adapters.

****Highly recommended for Off-Road and RAM Air applications.**

Order No. 021-439

Sudco FCR Air Cleaner/Airbox Adapters Sold each.

Kawasaki

Model	Year	FCR Carb (mm) Venturi Size	Air Filter Adapter	Qt Req'd	K&N Ref.	Order No.	(Comments)	Qt Req'd
ZX750 ZX7R96-99		39, 41mm	021-214 ram air	4	KA-7598	—	fits stock airbox	—
ZX900 ZX-9R	94-99	39, 41mm	021-214 ram air	4	—	—	—	—
ZX1000B ZX-10	88-90	37, 39, 41mm	021-212	4	RU-2952	005-174	dual filter kit	1
ZX1100C ZX-1190-93		37, 39, 41mm	021-214 ram air	4	KA-0004	—	fits stock airbox	—
ZX1100D ZX-11	93-99	37, 39, 41mm	021-214 ram air	4	KA-0010	—	fits stock airbox	—
ZX1100D ZX-11 (race cars only)		37, 39, 41mm	021-212	4	RU-2952	005-174	dual filter kit	1
ZRX1100A Zephyr	99-00	39, 41mm	021-216	4	RU-2922	005-184	dual filter kit	1

KTM

LC4 400RXC/ 600RXC	all	39, 41mm	021-212	1	—	—	use OEM filter	—
950 Adventurer	03-07	39, 41mm	021-212	1	—	—	dual filter kit	—

Moto-Guzzi

Sport 1000 (carbureted models)	94-97		021-600	2	—	—	use OEM filter	—

Suzuki

DR350S	90-99	35mm	021-216	1	—	—	stock airbox	—
DRZ400	00-07	39, 41mm	021-216	1	—	—	stock airbox	—
LT-Z400	04-06	39, 41mm	021-216A	1	—	—	stock airbox	—
GSX-R600	1993	39, 41mm	021-216	4	RU-3092	005-340	dual filter kit	1
SV650	99-02	39, 41mm	021-215	2	SU-6599	005-639	fits stock airbox	2
SV650	99-02	39, 41mm	021-216A	2	RU-0800	005-116	individual pods	2
GSX-R750 (air cooled)	86-92	39, 41mm	021-216	4	RU-2922	005-184	dual filter kit	1
GSX-R750W (liquid cooled)	93-95	37, 39, 41mm	021-216	4	RU-3092	005-340	dual filter kit	1
GSX-R750	96-97	35, 39, 41mm	021-215 ram air	4	SU-7596	005-345	fits stock airbox	1
GSX-R1100 (air cooled)	86-92	39, 41mm	021-216	4	RU-2922	005-184	dual filter kit	1
GSX-R1100 (liquid cooled)	93-97	37, 39, 41mm	021-216	4	RU-3092	005-340	dual filter kit	1
GSF1200	97	39, 41mm	021-216	4	RU-2922	005-184	dual filter kit	1

Triumph

DOHC Triple	94-96	39mm	021-600	3	RU-0981	005-744		3

Yamaha

FZR400	88-89	32, 33mm	021-211	4	RC-2890	005-170	individual pods	2 each
		—	—	—	RC-2900	005-171	individual pods	2 each
YZF450		39, 41mm	021-613	1	—	—	fits stock airbox	—
FZR600	89-96	32, 33mm	021-211	4	RC-2890	005-170	individual pods	2 each
		—	—	—	RC-2900	005-171	individual pods	2 each
YZF600	95-89	33mm	021-211	4	RC-2890	005-170	individual pods	2 each
		—	—	—	RC-2900	005-171	individual pods	2 each
YZF-R6		35mm	021-600	4	RU-0981	005-744	individual pods	4
YZF750	94-97	39, 41mm	021-216	4	RU-3092	005-340	dual filter kit	1
TDM850, TRX850	all	39, 41mm	021-216	2	YA-7585	—	fits stock airbox	1
FZR1000	87-95	37, 39, 41mm	021-216	4	RU-3092	005-340	dual filter kit	1
FZR1000	87-88	37, 39, 41mm	021-212	4	RU-0800	005-116	single filter	4
YZF1000R	1997	39, 41mm	021-215 fits stock	4	YA-1089	005-585	fits stock airbox	1
YZF-R1	98-99	39, 41mm	021-215 fits stock	4	YA-1098	005-637	fits stock airbox	1

KEIHIN CR Special Racing Carburetors

Keihin Roundslide CR Sidedraft Racing Carburetors

The choice of Team Honda for years on all there in-line 4-cylinder race bikes in Superbike, World Championship Endurance and Formula One classes. You'll find the power you need with these Keihin Roundslide CR carburetors. Designed for use on sidedraft four-stroke motorcycle engines. Features include: Improved throttle response; direct linkage to slides provides more precise control than vacuum slide carburetors. A 10% horsepower gain can be expected; Smooth venturi design produces stronger power than original equipment carburetors using butterfly throttle valves. Race fuel capability. Available for gasoline or alcohol use. Re-jetting required when using alcohol or methanol, kit available as an option. Ready to bolt-on and run, these kits come complete with mounting spigots, velocity stacks and velocity stack covers.
Available sizes: 26, 29, 31, 33, 35, 37 and 39mm. Intake length can be adjusted with optional mounting adapter spigots.
Most replacement and tuning parts are available, please see CR Special exploded view, parts list and parts/accessories on page 124-131.

CR Special Sets (Call for applications not listed)

Honda

Model	Year	CR26	CR29	CR31	CR33	CR35
CB400F Super Sport	75-77	016-300	—	—	—	—
CB500	71-73	—	016-3023	—	—	—
CB550	74-78	—	016-3023	—	—	—
CB750F/K (SOHC)	77-78	—	016-3027	016-3052	—	—
CB750F (DOHC) Super Sport	79-82	—	016-3026	016-3051	016-3075	016-3100
CB750 (SOHC)	69-76	—	016-3025	016-3050	—	—
CB750K (DOHC)	79-82	—	016-3026	016-3051	016-3075	016-3100
CB900F Super Sport	80-82	—	—	016-3051	016-3076	016-3100
CB1100F Super Sport	1983	—	—	016-3051	016-3076	016-3100

Kawasaki

ZX600A Ninja 600R	85-87	—	—	016-3054	016-3082	—
ZX600B Ninja 600RX	1987	—	—	016-3054	016-3082	—
ZX600C Ninja 600R	88-97	—	—	016-3054	016-3082	—
KZ650B/C/D/E/F	77-80	—	016-3029	—	—	—
KZ750E/H/N	80-83	—	016-3029	—	—	—
ZX750F Ninja 750R	87-90	—	—	—	—	016-3105
Z1/A/B-900	73-75	—	016-3029	016-3055	016-3079	016-3103
KZ900A	76-77	—	016-3029	016-3055	016-3079	016-3103
KZ900B LTD	1976	—	016-3029	016-3055	016-3079	016-3103
ZX900A Ninja 900R	84-86	—	—	—	016-3083	016-3106
KZ1000	77-80	—	016-3029	016-3055	016-3079	016-3103
KZ1000J/K/M	81-82	—	016-3030	016-3055	016-3080	016-3103
KZ1000R Replica	82-83	—	016-3030	016-3055	016-3080	016-3103
ZX1000A Ninja 1000R	86-87	—	—	—	016-3084	016-3106
KZ1100	81-83	—	016-3030	016-3055	016-3080	016-3103
KZ1100B GPz	81-82	—	016-3030	016-3055	016-3080	016-3103
ZX1100A GPz	83-84	—	016-3030	016-3055	016-3080	016-3103

IMPORTANT: **Legal in California only for racing vehicles which may never be used upon a highway.**

KEIHIN CR Special Racing Carburetors

Suzuki

Model	Year	CR26	CR29	CR31	CR33	CR35
GSX600F Katana		—	—	—	016-3092	—
GS750 2-Valve	77-79	—	016-3033	—	—	—
GS750E 2-Valve	80-82	—	016-3033	—	—	—
GS750L 2-Valve	79-81	—	016-3033	—	—	—
GS750ED/ESD 4-Valve	1983	—	016-3034	016-3059	—	—
GS750T 4-Valve	82-83	—	016-3034	016-3059	—	—
GS750SD Katana 4-Valve	1983	—	016-3034	016-3059	—	—
GS850	80-83	—	—	016-3060	016-3090	—
GS1000		—	—	016-3061	016-3090	016-3109
GS1100		—	—	—	016-3090	—
GSX1100		—	—	016-3061	016-3090	016-3110
GSX-R1100 Air Cooled	89-92	—	—	—	—	—
GS1150	83-86	—	—	—	016-3090	—

Yamaha

FJ600	84-85	—	016-3037	*016-3064	—	—
				*Race motor only		
FZ600	86-88	—	016-3037	*016-3064	—	—
				*Race motor only		
XJ650		—	—	016-3065	—	—
XJ1100 Maxim	1982	—	—	—	016-3096	—
XS1100		—	—	—	016-3097	016-3113
FJ1100	84-85	—	—	—	016-3096	016-3113
FJ1200	86-92	—	—	—	016-3096	016-3113

Keihin CR Dual Roundslide Racing Carburetors

Ready to bolt-on and run, these kits come complete with mounting spigots and velocity stacks, or can bolt up to a pod air filter system. Requires a push-pull throttle assembly, available as an option. Available sizes: 31, 33, 35, 37 and 39mm. Most replacement and tuning parts are available, please see CR Special exploded view and parts list on page 124-125.

CR Dual Carburetor Sets (Call for applications not listed)

Honda

Model	Year	CR31	CR33	CR35	CR37
CB350K Super Sport **(will not fit stock frame)**		016-3200	—	—	—
CB450K Super Sport	68-74	—	016-3225	016-3250	016-3275
CB500T	75-76	—	—	—	016-3275

Kawasaki ***please specify model year when ordering

EX250 Ninja 250R ***Race motor only**		016-3205	—	—	—
EX500		—	016-3228	016-3253	016-3278

Suzuki Street

GS500E	1989-	—	016-3231	016-3256	016-3284
DR750		—	—	—	—

Triumph

Bonneville	2001 on	—	—	016-3600	—

Yamaha

SRX600S/SC	1986	016-3210	016-3234	016-3259	016-3281
TT600K/L/N/S	83-86	016-3210	016-3234	—	—
XT600		016-3210	016-3234	—	—

KEIHIN CR Special Exploded View

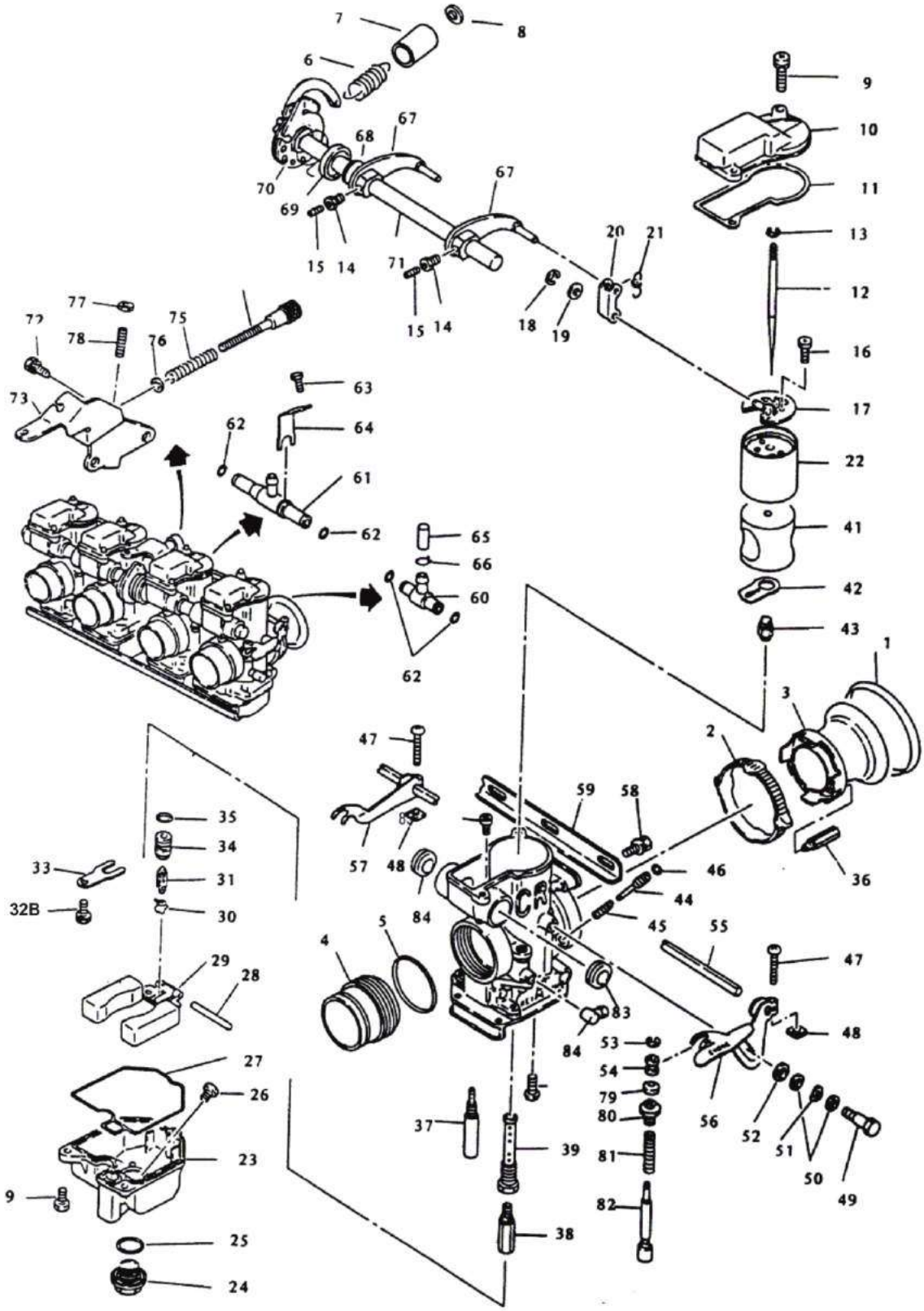

Float Height
14mm

Carburetors are intended for off-road riding and racing use only. Not legal for use in California or other locations where similar pollution laws may apply.

CR Special (CRS) Replacement Parts

Applications: CR26, CR29, CR31, CR33, CR35, CR37, CR39.
Keihin Part No. highlighted in BOLD RED are included in rebuild kit.

No.	Description	Application	Keihin No.	Order No.
1.	Rubber Cap	26-33mm	R028-004-7000	018-811
		35-39mm	1028-809-7000	018-810
2.	Velocity Stack 45mm	26-33mm	1130-800-2001	020-220
	Velocity Stack 70mm	26-33mm	1130-801-2001	020-222
	Velocity Stack 45mm	35-39mm	1130-802-2001	020-244
3.	Clamps	26-33mm	1129-803-7000	018-798
		35-39mm	1129-804-7000	018-799
4.	Mounting Adapters (Spigots)			Pg.126-127
5.	O-Ring	26-33mm	**0901-812-6000**	018-600
		35-39mm	**0901-012-6000**	018-601
6.	Tension Spring	26-39mm	1291-804-2000	018-604
7.	Tube	26-39mm	0840-846-0000	018-606
8.	Collar	26-39mm	1118-878-2000	018-608
9.	Screw	26-39mm	4139-802-1100	018-610
10.	Top Cap	26-39mm	1030-814-2002	018-612
11.	Gasket, Top Cap	26-39mm	**1031-802-2002**	018-614
12.	Jet Needle (see page 53 for * **optional** Jet Needles)			
	5 Clip position	26-33mm	N427-11Y-xxx	Pg.131
	7 Clip position	26-33mm	N427-12Y-xxx	Pg.131
	5 Clip position	35-39mm	N427-38-xxx	Pg.131
	7 Clip position	35-39mm	N427-51-xxx	Pg.131
13.	Clip	26-39mm	0403-802-1000	018-616
14.	Locknut	26-39mm	0208-803-1200	018-618
15.	Stop Screw	26-39mm	1034-814-2000	018-620
16.	Screw	26-39mm	W9155-04060	018-622
17.	Valve Plate	26-33mm	1019-802-2101	018-624
		35-39mm	1019-801-2101	018-625
18.	Clip	26-39mm	W9302-3000	018-626
			16179-676-3000	
19.	Plain Washer	26-39mm	0301-825-7000	018-628
20.	Link Arm	26-39mm	1061-805-2000	018-630
21.	Spring	26-39mm	1291-802-2000	018-632
22.	Throttle Valve	26-33mm	N502-04x-00	Pg.129
		35-39mm	N502-03x-00	Pg.129
23.	Float Bowl	26-39mm	1050-825-2000	018-660
24.	Drain Bolt	26-39mm	1018-801-2000	018-662
25.	O-Ring	26-39mm	**16173-001-0040**	018-664
26.	Starter Jet	26-39mm	1001-108-xxx	Pg.149
27.	O-Ring	26-39mm	**0901-811-6000**	018-668
28.	Arm Pin	26-39mm	**W9525-25250**	018-670
29.	Float	26-39mm	1052-818-2100	018-672
30.	Clip	26-39mm	**0405-019-1000**	018-674
31.	Needle Valve	26-39mm	**16155-ZG8-L100**	018-676
32.	Screw	26-39mm	W9155-04060	018-622
33.	Plate	26-39mm	1164-038-2000	018-678
34.	Valve Seat (Std)	26-39mm	**N360-01L00-3.2**	018-690
	Valve Seat (*Optional)	26-39mm	N360-01x00	Pg.128
35.	O-Ring, Valve Seat	26-39mm	**16075-MB0-0030**	018-694
36.	Main Air Jet	26-39mm	N424-14-xxx	Pg.151
37.	Slow Jet	26-39mm	N424-24-xxx	Pg.148
38.	Main Jet	26-39mm	99101-357-xxx	Pg.150
39.	Nozzle Holder	26-39mm	N426-04000	018-696
40.	Screw	26-39mm	4115-800-1101	018-698
41.	Jet Block	26-39mm	1605-xxx-2001	Pg.130
42.	Gasket	26-33mm	1202-809-2002	018-710
		35-39mm	1202-808-2002	018-712
43.	Nozzle, Flat Type	26-39mm	1041-800-2000	018-714
	Nozzle, Screen Type	26-39mm	1041-801-2000	018-715
	Nozzle Screen Type-Used for drag racing and alcohol conversions.			
44.	Air Screw	26-39mm	1014-004-2002	018-718
45.	Spring	26-39mm	1290-003-2001	018-720
46.	O-Ring	26-39mm	**0901-006-6000**	018-722
47.	Screw	26-39mm	4110-806-1100	018-724
48.	Nut	26-39mm	0205-800-1100	018-726
49.	Bolt	26-39mm	0118-801-1100	018-728
50.	Plain Washer	26-39mm	0301-009-1100	018-730
51.	Wave Washer	26-39mm	2007-800-2000	018-732
52.	Plain Washer	26-39mm	0301-104-7000	018-734
53.	Clip	26-39mm	W9302-25000	018-736
54.	Collar	26-39mm	1118-801-2000	018-738
55.	Shaft	26-39mm	1111-813-2000	018-740
56.	Lever	26-39mm	1113-861-2001	018-742
57.	Lever	26-39mm	1113-862-2000	018-744
58.	Screw	26-39mm	4139-804-1100	018-746
59.	Bracket, Top/Bottom	26-39mm	1190-833-2000	018-748
60.	T-Joint	26-39mm	1077-804-7000	018-751
61.	T-Joint	26-39mm	1077-803-7000	018-753
		26-39mm	Single Outlet	021-853
62.	O-Ring	26-39mm	**W9351-13057**	018-755
63.	Screw	26-39mm	W9155-04060	018-622
64.	Bracket	26-39mm	1190-832-2000	018-757
64A.	Bracket (Closer)	26-39mm	1190-869-2000	021-852
65.	Rubber Cap	26-39mm	**1028-808-7000**	018-759
66.	Clip	26-39mm	**W9535-55000**	018-761
67.	Link Lever	26-39mm	1100-836-2100	018-763
68.	Collar	26-39mm	1118-861-7000	018-765
69.	Collar	26-39mm	1118-860-7000	018-767
70.	Spring	26-39mm	1305-883-2000	018-769
71.	Throttle Shaft 4-cyl.	26-39mm	5025-847-2200	018-771
71A.	Throttle Shaft 2-cyl.		5025-891-2101	021-556
72.	Screw	26-39mm	4139-803-1100	018-773
73.	Bracket	26-39mm	1190-831-2002	018-775
74.	Idle Speed Screw (Stop Screw)	26-39mm	1034-808-2000	018-777
74A.	Idle Speed Screw* (Stop Screw) *Option	26-39mm	1034-902-2100	018-778
75.	Spring	26-39mm	1290-849-2003	018-779
76.	Plain Washer	26-39mm	16178-ML7-0040	018-781
			W9201-05100 (old number)	
77.	Nut	26-39mm	94001-0508-0S	018-783
78.	Screw	26-39mm	93500-05025-1H	018-785
79.	Rubber Cap	26-39mm	1028-042-7001	018-787
80.	Cap	26-39mm	1029-805-7000	018-789
81.	Spring	26-39mm	1300-136-2000	018-791
82.	Starter Valve	26-39mm	1166-802-2101	018-793
83.	Seal	26-39mm	1099-805-7000	018-795
84.	L-Joint	26-39mm	1074-817-7001	018-797
85.	Air Leak Jet	26-39mm	1001-108-xxx	Pg.150
86.	End Cap	26-39mm	1096-810-2000	018-796

See page 128 for CR Special Carburetor Kits and Methanol Conversion Kits.

KEIHIN CR Special Mounting Adapters (Spigots)

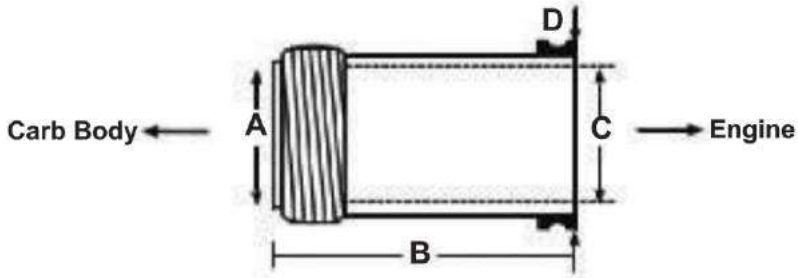

See Page 127 for Dimensions

Keihin CR Special Mounting Adapters (Spigots) Sold each.

Honda

Application	26mm	29mm	31mm	33mm	35mm	37mm	39mm
CB650 82-on	—	020-023	020-013	—	—	—	—
CB700SC	—	020-023	020-013	—	—	—	—
CB750SOHC	—	020-473	020-474	—	—	—	—
CB750DOHC	Special Adapter for Racing Use	—	020-044	020-049	020-060	—	—
CB900DOHC	—	020-032	020-044	020-049	020-060	020-069	020-080
CB1100	—	—	—	020-049	020-060	020-069	020-080

Kawasaki

GPz550 82	020-040	—	—	—	—	—	—
ZX600R Ninja	—	—	020-025	020-026	—	—	—
ZX900 Ninja	—	—	—	020-051	020-076	—	—
ZX1000R	—	—	—	020-050	020-076	020-069	—
KZ750 Z11	—	020-012	—	020-042	—	—	—
KZ750 FXII/III	—	020-010	020-031	—	020-065	—	—
KZ900 Z1	—	020-012	020-025	020-042	020-028	—	—
KZ1000	—	—	020-025	020-026	020-028	020-069	020-080
GPz1100	—	—	—	020-051	020-066	020-069	020-080
GPX750	—	—	—	020-052	020-059	—	—

Suzuki

GS750	—	020-024	020-025	020-026	—	—	—
GS850	—	020-024	020-025	020-026	020-028	—	—
GS1000	—	—	020-025	020-026	020-028	—	—
GSX1000	—	020-023	020-013	—	—	—	—
GSX-R750	—	—	—	020-051	020-066	020-069	—
GSX-R1100	—	—	—	—	020-092	020-069	020-080
GS1100	—	—	—	020-051	020-076	020-069	020-080
GS1150	—	—	—	020-051	020-059	020-069	020-080

Yamaha

XS750	—	—	020-034	—	—	—	—
XJ1100/ XS1100	—	—	—	020-051	020-076	—	—
FJ1100/FJ1200	—	—	—	020-051	020-076	—	—
FZ600	—	020-024	020-025	(use FJ600 Rubber Flange)	—	—	—

Dual CR Adapters

Kaw EX250R	—	—	020-099	020-098	—	—	—
Kaw EX500	—	—	—	020-050	020-083	020-081	020-091
Yam SRX600	—	—	020-099	020-098	020-097	020-088	—
Triumph Bonneville	—	—	—	—	020-072	—	—

KEIHIN CR Special Mounting Adapters (Spigots)

The CR Special mounting adapter spigots are made in Japan by Keihin especially for the CR Special carburetor for custom designs. Sold each.

Application	ID Mark	I.D. Carb Side "A"	Length "B"	I.D. Engine "C"	O.D. Engine "D"	Order No.
CR26	N195-07A00	26mm	28mm	26mm	30mm	020-064
CR26	1253-832-2000	26mm	40mm	26mm	35mm	020-039
CR26	1253-834-2000	26mm	56mm	30mm	36mm	020-040
CR26		26mm	42mm	26mm	34mm	020-499
CR29	1253-801-2000	29mm	46mm	34.2mm	40mm	020-010
CR29	1253-802-2001	29mm	45mm	34.4mm	44mm	020-011
CR29	1253-803-2001	29mm	42mm	29mm	34mm	020-012
CR29	1253-815-2000	29mm	34.5mm	34.5mm	40mm	020-023
CR29	1253-816-2000	29mm	42mm	34.5mm	40mm	020-024
CR29	1253-824-2000	29mm	40mm	36.5mm	44mm	020-032
CR29	1253-835-2000	29mm	29mm	29mm	34mm	020-041
CR29	N195-05A00	29mm	38mm	30mm	40mm	020-062
CR29	N195-06A00	29mm	46mm	32.5mm	40mm	020-063
CR29	N195-10F00	29mm	28mm	29mm	37mm	020-473
CR31	1253-804-2000	31mm	34.5mm	34.5mm	40mm	020-013
CR31	1253-817-2000	31mm	42mm	34.5mm	40mm	020-025
CR31	1253-823-2000	31mm	46mm	34.2mm	40mm	020-031
CR31	1253-825-2000	31mm	40mm	34.5mm	40mm	020-033
CR31	1253-826-2000	31mm	46mm	32.5mm	38mm	020-034
CR31	1253-829-2000	31mm	55mm	34.5mm	40mm	020-035
CR31	1253-840-2000	31mm	50mm	34.2mm	44mm	020-044
CR31	1253-842-2001	31mm	46mm	34.2mm	42mm	020-046
CR31	N195-10D00	31mm	25mm	31mm	38mm	020-099
CR31	N195-10G00	31mm	28mm	31mm	37mm	020-474
CR33	N195-06B00	33mm	46mm	32.5mm	40mm	020-074
CR33	1253-818-2000	33mm	42mm	34.5mm	40mm	020-026
CR33	1253-836-2000	33mm	29mm	29mm	34mm	020-042
CR33	1253-837-2000	33mm	45mm	34.5mm	44mm	020-043
CR33	1253-841-2001	33mm	46mm	34.2mm	42mm	020-045
CR33	1253-845-2000	33mm	50mm	36.4mm	44mm	020-049
CR33	1253-847-2000	33mm	33mm	36mm	42mm	020-050
CR33	1253-848-2000	33mm	46mm	36mm	42mm	020-051
CR33	1253-849-2000	33mm	40mm	36mm	42mm	020-052
CR33	N195-10C00	33mm	25mm	33mm	38mm	020-098
CR35	1253-820-2000	35mm	42mm	34.5mm	40mm	020-028
CR35	1253-813-2000	35mm	34.5mm	34.5mm	40mm	020-021
CR35	N195-01A00	35mm	46mm	34.2mm	42mm	020-059
CR35	N195-03A00	35mm	50mm	36.4mm	44mm	020-060
CR35	N195-08A00	35mm	46mm	34mm	42mm	020-065
CR35	N195-09A00	35mm	46mm	34.5mm	42mm	020-066
CR35	N195-08B00	35mm	46mm	36mm	42mm	020-076
CR35	N195-02A00	35mm	33mm	38mm	44mm	020-083
CR35	N195-02B00	35mm	31mm	38mm	44mm	020-084
CR35	N195-03E00	35mm	46mm	36.4mm	44mm	020-092
CR35	N195-09C00	35mm	25mm	33mm	38mm	020-097
CR35	N195-03K00	35mm	25mm	36mm	42mm	020-072
CR37	N195-01B00	37mm	46mm	38mm	44mm	020-069
CR37	N195-02C00	37mm	33mm	38mm	44mm	020-081
CR37	N195-03C00	37mm	31mm	35mm	44mm	020-082
CR37	N195-03D00	37mm	41mm	38mm	43mm	020-087
CR37	N195-858-2000	37mm	25mm	33mm	38mm	020-088
CR39	N195-01C00	39mm	46mm	38mm	44mm	020-080
CR39	N195-02E00	39mm	33mm	38mm	44mm	020-091
CR39	N195-02F00	39mm	31mm	38mm	44mm	020-095
CR39	N195-12B00	39mm	31mm	39mm	48mm	020-096
CR39	N195-03J00	39mm	40mm	36.4mm	44mm	020-093

KEIHIN CR Special Parts & Accessories

Sudco Methanol Conversion Kit

The Methanol Kit from Sudco includes all the necessary components: main jets, needles, needle valves, etc. All the jetting required to convert your Keihin CR Special carburetor to methanol usage. Sold as a kit. **Note: Requires experienced tuner or technician familiar with re-jetting for methanol usage.**

Application	Order No.
CR Special 26-33mm	018-855
CR Special 35-39mm	018-856

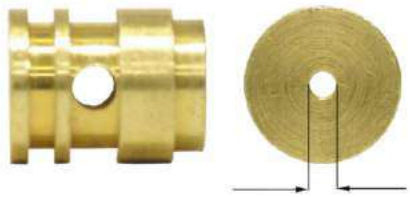

CR Special Needle Valve Seats

Valve Seat diameter should be determined according to maximum fuel flow and fuel pressure. Valve Seat only, Sold each.

Size	Keihin No.	Order No.
1.6mm	N360-01D00	018-682
1.8mm	N360-01E00	018-683
2.0mm	N360-01F00	018-684
2.2mm	N360-01G00	018-685
2.4mm	N360-01H00	018-686
2.6mm	N360-01I00	018-687
2.8mm	N360-01J00	018-688
3.0mm	N360-01K00	018-689
3.2mm	N360-01L00	018-690
O-Ring for Needle Valve seats listed	16075-MB0-0030	018-694
Needle Valve for Valve Seats listed	16155-ZG8-L100	018-676
Clip for Needle Valve 018-676	0405-019-1000	018-674

Sudco CR Special Carburetor Rebuild Kits

Sudco rebuild kits for CR specials contain GENUINE Keihin replacement parts, everything necessary to perform routine carburetor service. Kits are sold per set for 4 carbs. Two kits available;

Description	Order No.
CR Special 26-33mm Rebuild Kit.	018-851
CR Special 35-39mm Rebuild Kit.	018-852

Note: Kits come with 3.2 Needle Seat size. 2.4 Needle Seat size is available as an option. Please specify needle seat size when ordering carb rebuild kit.

Exploded (Page 124)

View No.	Qt	Contents
5.	4	ADP O-Ring
11.	4	Gasket
25.	4	O-Ring
27.	4	O-Ring
28.	4	Arm Pin
30.	4	Clip
31.	4	Needle Valve
34.	4	Needle Valve Seat 3.2
35.	4	O-Ring
46.	4	O-Ring
62.	12	O-Ring
65.	2	Rubber Cap
66.	2	Inlet Cap Clip
34.	4	**Needle Valve Seat 2.4* is available as an option. Please specify when ordering.**

KEIHIN CR Special Parts & Accessories

Keihin CR Special Velocity Stacks

The Keihin Velocity Stacks are the most efficient and are a perfect fit for the CR Special Smoothbores. These stacks are available in selected sizes shown. No tools are necessary for installation. Sold each. **Clamps sold separate.**

Length	Color	Carb Size	Keihin No.	Order No.
45mm Straight	Black	26-33mm	1130-800-2001	020-220
70mm Straight	Black	26-33mm	1130-801-2001	020-222
45mm Straight	Black	35-39mm	1130-802-2001	020-244
Clamp	Gray	26-33	1129-803-7000	018-798
Clamp	Gray	35-39	1129-803-7000	018-799

Keihin CR K&N Air Filters

K&N Air Filters for Keihin CR Specials. Sold each.

Description	Size	Order No.
RC-1820 with Chrome End Cap	26-33mm	005-140
RC-0981 with Chrome End Cap	35-39mm	005-121
RU-0981 with Rubber End Cap	35-39mm	005-744

Throttle Valves

To enrichen the throttle valve, use a smaller number (cutaway). Recommended increment change is .5mm. Sold each.

Description	Keihin No.	Order No.
2.0 slide for CR26-33mm	N502-04A	018-640
2.5 slide for CR26-33mm	N502-04B	018-641
3.0 slide for CR26-33mm	N502-04C	018-642
3.5 slide for CR26-33mm	N502-04D	018-643
4.0 slide for CR26-33mm	N502-04E	018-644
2.0 slide for CR35-39mm	N502-03A	018-650
2.5 slide for CR35-39mm	N502-03B	018-651
3.0 slide for CR35-39mm	N502-03C	018-652
3.5 slide for CR35-39mm	N502-03D	018-653
4.0 slide for CR35-39mm	N502-03E	018-654

Idle Speed Screw (Stop Screw)

(No. 74A Exploded View) Optional longer length Idle Speed Screw for Keihin CR Special carburetors. Sold Each. See page 124 exploded view and page 125 replacement parts, **No. 74A.**

Description	Keihin No.	Order No.
Idle Speed Screw (Stop Screw)	1034-902-2100	018-778

Photo courtesy of Bonneville Performance
#35 Kyle Ragsdale

KEIHIN CR Special Parts & Accessories

018-696 018-714 018-715

Jet Blocks Sold each.

Size	Keihin No.	Order No.
CR26mm	1605-806-2001	018-701
CR29mm	1605-809-2000	018-702
CR31mm	1605-811-2000	018-703
CR33mm	1605-813-2000	018-704
CR35mm	1605-801-2001	018-705
CR37mm	1605-803-2000	———
CR39mm	1605-805-2000	018-707

Nozzle & Nozzle Holder Sold each

There are two primary type nozzles, Flat and Screen type. The combination of nozzle and nozzle holder controls full throttle fuel delivery characteristics. The Flat Nozzle is stock. Screen type nozzle flows more fuel at high RPM's and is used for drag racing and alcohol conversions.

Description	Keihin No.	Order No.
Nozzle Holder	N426-04000	018-696
Flat Nozzle	1041-800-2000	018-714
Screen Nozzle	1041-801-2000	018-715

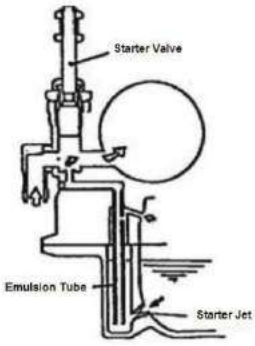

CR Special Starter Jets (1001-108-XXX)

The starter jet adjusts the richness of the starter valve by metering the amount of fuel entering from float bowl.
Applications: CR Special (CRS) 26 - 33mm, 35 - 39mm Carburetors.

Size	Order No.	Size	Order No.
#35	019-370	#60	019-375
#40	019-371	#65	019-376
#45	019-372	#70	019-377
#50	019-373		

Main Air Jet N424-14-XXX

The Main Air Jet meters the air entering the needle jet holder. Use smaller number to richen.
Applications: CR Special (CRS) 26 - 33mm & 35 - 39mm Carburetors

Size	Order No.	Size	Order No.	Size	Order No.
#80	019-301	#140	019-309	#200	019-315
#90	019-303	#150	019-310	#210	019-316
#95	019-304	#160	019-311	#220	019-317
#100	019-305	#170	019-312	#230	019-318
#110	019-306	#180	019-313	#240	019-319
#120	019-307	#190	019-314	#250	019-320
#130	019-308				

5 Clip Positions

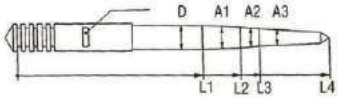

CR26-33mm (5-Clip Position) Sold each.

Size	Keihin No.		Order No.
	Y50N427-11Y50	Richer	017-130
Y60	N427-11Y60		017-131
Y70	N427-11Y70		017-132
Y80	N427-11Y80		017-133
Y90	N427-11Y90		017-134
Y00	N427-11Y00		017-135
Y01	N427-11Y01		017-136
Y02	N427-11Y02		017-137
Y03	N427-11Y03	Leaner	017-138

Clip for Jet Needle

0403-802-1000	018-616

7 Clip Positions

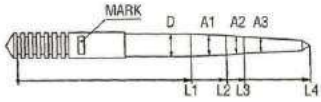

CR26-33mm (7-Clip Position) Sold each.

Size	Keihin No.		Order No.
YY5	N427-12Y50	Richer	017-074
YY6	N427-12Y60		017-075
YY7	N427-12Y70		017-076
YY8	N427-12Y80		017-077
YY9	N427-12Y90		017-078
YY0	N427-12Y00		017-079
YY1	N427-12Y10		017-080
YY2	N427-12Y20		017-081
YY3	N427-12Y30	Leaner	017-082

Clip for Jet Needle

0403-802-1000	018-616

5 Clip Positions

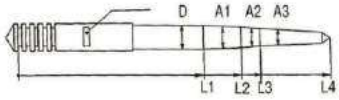

CR35-39mm (5-Clip Position) Sold each.

Size	Keihin No.		Order No.
3865	N427-38A00	Richer	———
3867	N427-38B00		———
3869	N427-38C00	Leaner	017152

Clip for Jet Needle

0403-802-1000	018-616

7 Clip Positions

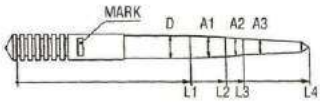

CR35-39mm (7-Clip Position) Sold each.

Size	Keihin No.		Order No.
5173	N427-51A00	Richer	017-100
5174	N427-51B00		017-101
5175	N427-51C00		017-102
5176	N427-51D00		017-103
5177	N427-51E00		017-104
5178	N427-51F00		017-105
5179	N427-51G00		017-106
5180	N427-51H00		017-107
5181	N427-51J00		017-108
5182	N427-51K00		017-109
5183	N427-51L00	Leaner	017-110

Clip for Jet Needle

0403-802-1000	018-616

Sudco Carburetor Needle Shims

Sold 12 piece package.

Description Dimensions - Inside, Outside, Thickness	Order No.
Most Keihin 3.2mm I.D. x 7mm O.D. x .020" (0.5mm) thick	009-396
Most Mikuni 2.7mm I.D. x 6.35mm O.D. x .020" (0.5mm) thick	009-395

KEIHIN PWK Carburetors

Non Air Striker PWK33, 35, 36, 38, 39, 41

PWK36 Quad Vent

PWK 35, 38 Air Striker/Quad Vent

Keihin PWK Series Carburetors

Producing power without compromise, Keihin PWK carburetors have set the standard for ATV, motocross, and offroad racing carburetors. Because of there great performance, they come stock on a lot of leading brand names. PWK features include:

- Chromed semi-flat (D shape) throttle valve for excellent response and more flow at high RPM.
- Throttle Bores sized to give maximum power.
- Quad Vents - Eliminates post jump bogging from fuel plugged vent passages.
- PWK Air Strikers - Directs air to main nozzle for improved signal and throttle response.

PWK carburetors are available in Standard (Non Air Striker) and Air Striker/Quad Vent. Sold each.

PWK (Non Air Striker) Standard Jetting Specifications

Carburetor	Main Jet	Slow Jet	Jet Needle	Throttle Valve Cutaway	Float Height	Description/Mark	Order No.
PWK28	#135	#38	46-JJH	3.5	19mm	PWK28/29S	016-144
PWK33	#165	#52	48-CGL	6.0	16mm	PWK33/S46	016-148
PWK35	#160	#68	48-DGK	6.0	16mm	PWK35/70R	016-150
PWK38	#172	#58	48-DEG	6.0	16mm	PWK38/71R	016-153
PWK39	#160	#60	48-DGH	6.0	16mm	PWK39/72R	016-155
PWK41 Pro-Series	#160	#60	48-DGH	6.0	16mm	PWK41 Pro-Series	016-156

PWK Quad Vent/Air Striker Standard Jetting Specifications

PWK35 Quad Vent/Air Striker	#160	#48	48-DEK	4.5	16mm	PWK35 A.S./S65	016-160
PWK36 Quad Vent	#165	#55	48-DGJ	5.0	16mm	PWK36/S63	016-163
PWK38 Quad Vent/Air Striker	#170	#55	48-DDJ	7.0	16mm	PWK38 A.S./S66	016-167

Note: * X00 represents product code stamped on the carburetor body just above the float bowl.

PWK Special Set Carburetors

Use the following part numbers when ordering for special jetting request. **Please note:** Special Set carburetors are pre-jetted to your request or specific application. Please specify exact jetting details or bike application for each special set carburetor ordered.

Carburetor	Description/Mark	Special Set Order No.
PWK28 Non Air Striker	PWK28/29S	016-189
PWK33 Non Air Striker	PWK33/S46	016-191
PWK35 Non Air Striker	PWK35/70R	016-192
PWK35 Quad Vent/Air Striker	PWK35 A.S./S65	016-197
PWK36 Quad Vent	PWK36/S63	016-198
PWK38 Non Air Striker	PWK38/71R	016-194
PWK38 Quad Vent/Air Striker	PWK38 A.S./S66	016-199
PWK39 Non Air Striker	PWK39/72R	016-195

Sudco Choke Cable System for all PWK's

Includes parts **A thru F.** listed below. All PWK carburetors.

Order No. 018-501

A.	Cable Sealing Cap	16118-166-0040	018-002
B.	Choke Plunger	W1275-028-9901	021-512
C.	Choke O-Ring	0901-069-6000	021-527
D.	Spring	1290-922-2000	021-582
E.	Cable Holder	W1551-140-9900	021-583

PWK OEM Float Bowl O-Ring

Genuine replacements for applications listed.
Made in Japan. Sold each. * Non-Keihin Production

Model	Year	Carb	OEM Reference	Order No.
Honda				
CR80/CR80RB	96-01	PWK28	16163-KBA-850	018-406
CR85R/RB	02-07	PWK28	16163-KBA-850	018-406
CR125R	98-00	PWK38	16163-KZ4-J01	* 021-872
Kawasaki				
KX85A	01-13	PWK28	92055-1389	018-406
KX100D	01-13	PWK28	92055-1389	018-406
KX125	88-91	PWK35	11009-1716	018-113
KX125	92-95	PWK36	11009-1716	018-113
KX125	96-97	PWK35	11009-1716	018-113
KX125	98-00	PWK36	11060-1254	* 021-872
KDX200	88-06	PWK35	11009-1716	018-113
KDX220	97-05	PWK33	11009-1716	018-113
KX250	88-97	PWK33	11009-1716	018-113
KX250	98-07	PWK38	11060-1254	* 021-872
KX500	88-04	PWK38	11009-1716	018-113
KTM				
Models with standard PWK Carb			54531610000	018-113
Non Air Striker, no hole on o-ring				
Models with PWK AG Carb			54831010000	*021-872
Quad Vent/Air Striker with hole on o-ring				
Suzuki				
RM85	02-13	PWK28	13251-03B00	018-406
RM100K3	2003	PWK28	K9205-51389	018-406
RM250V	1997	PWK38	13696-28E00	018-113
RM250W/X/Y/K1-K7	98-07	PWK38	13696-44E00	*021-872
Yamaha				
YZ85	93-13	PWK28	5PA-14984-00-00	018-406
YZ250	95-98	PWK38	4MX-14984-00-00	018-113
YZ250	99-13	PWK38	4JT-14984-00-00	*021-872

Tokyo mods

Tokyomods Drain Plug

Keeps all fuel contaminates including water away from the main jet, helps control fuel slosh and bogging, won't get distorted from over tightening, and easy to reach for quicker jetting changes. Machined from 6061 aluminum. Also fits Keihin FCR-MX, PJ, PWK, PWM, and PE carbs.

Application	Color	Order No.
FCR-MX, PJ, PWK, PWM, PE	Red	024-230R
	Blue	024-230B
	Black	024-230K
	Mag	024-230M

GENUINE Keihin Dealer Jet Kit (Main & Slow)

Genuine OEM **99101-357** main jets and **N424-21** slow jets.
Made in Japan.

Keihin Dealer Jet Kit, sizes **Order No. 019-999**
#120 - #180 Main Jets and sizes #40 - #65 Pilot Jets
Kit includes qt 2 of the following jet sizes:
Main Jets: #120 , #122, #125, #128, #130, #132, #135, #150, #152, #155, #158, #160, #162, #165, #168, #170, #172, #175, #178, #180.
Slow Jets: #40, #42, #45, #48, #50, #52, #55, #58, #60, #62, #65.
Total jets:62 with storage box.

Applications

Honda	CRF250R (04-08), CRF250X (04-09), CRF450R (02-08) CRF450X (05-09), CRF450X (2012)
Kawasaki	KX250, KX250F (04-10), KX450 (06-08)
KTM	
Suzuki	RM250, RM-Z250K (04-10), RM-Z450K,(05-07)
Yamaha	YZ250, WR250F (01-08),YZ250F (01-08) YZ426F (00-02), WR426F (01-02) YZ450F (03-08), WR450 (03-08),YFZ450 (04-08)

99101-357 Hex Main Jets

Sold each.

Size	Order No.
#120	019-117
#122	019-118
#125	019-119
#128	019-120
#130	019-121
#132	019-122
#135	019-123
#150	019-129
#152	019-130
#155	019-131
#158	019-132
#160	019-133
#162	019-150
#165	019-134
#168	019-151
#170	019-135
#172	019-152
#175	019-136
#178	019-153
#180	019-137

For more sizes see page 150

N424-21 Slow Jets

Sold each.

Size	Order No.
#40	019-007
#42	019-008
#45	019-009
#48	019-010
#50	019-011
#52	019-012
#55	019-013
#58	019-014
#60	019-015
#62	019-016
#65	019-017

For more sizes see page 148

KEIHIN PWK 28 Exploded View

PWK28 Replacement Parts

Keihin Part No. Highlighted in BOLD RED are included in rebuild kit.

No.	Description	Keihin No.	Order No.
2A.	Starter Valve (pull knob) Complete	1166-818-2100	018-500
2B.	Choke Cable System Complete		018-501
	*See individual parts with asterisk *50, *51, *52, *53, *54		
3.	Float	W1310-080-9901	018-397
4.	Float Bowl Complete	N350-03A00	018-575
5.	Gasket, Float Bowl	**W1354-042-9900**	018-406
6.	Plug Screw	16162-ND4-7511-M1	018-128
7.	O-Ring, Plug Screw	**16173-001-0040**	018-664
8.	Float Valve Complete	**W1362-020-9901**	018-389
10.	Slow Jet	N424-21-xxx	Pg.148
11.	Jet Needle	N427-46-xxx	Pg.147
12.	Clip, Jet Needle	**16115-169-0040**	018-033
13.	Throttle Valve	N502-11H00 #3.5	018-582
	Throttle Valve, Chrome **(see chart)**	N502-52H00 #3.5	018-590
15A.	Top Cover	1030-844-2000	021-575
15B.	Top Cover (option)	1030-843-2200	021-586
16.	Gasket, Top	**1202-837-2000**	018-566
17.	Air Adjust Screw	**W1446-231-9900**	018-089
18.	Spring, Air Adjust Screw	**W1711-416-9900**	018-090
19.	Spring, Throttle Valve	1290-921-2000	018-532
20.	Clip, Float Valve	**0405-013-1000**	021-576
21.	Screw, Float Bowl	**N114-04160**	021-577
22.	Bowl, Vent Pipe	W9404-40090	021-578
23.	Overflow Pipe	95003-07042-31	018-534
24.	Float Pin	**W9525-25250**	018-670
25.	Clip	W9535-35000	018-098
26.	Main Jet (hex type)	99101-357-xxx	Pg.150
26A.	Main Jet SDGAA (round type)	99101-393-xxx	Pg.150
27A.	Cable Adjuster	W9581-59250	018-005
27B.	Cable Adjuster	1036-804-2000	018-542
28.	Nut, Cable Adjuster	W1793-130-9900	018-008
29.	Idle Adjuster	1034-831-2000	018-568
29.	Idle Adjuster (for Chrome T/V)	**1034-853-2000**	018-569
30.	Spring, Idle Adjuster	1290-923-2000	018-562
30.	Spring, (for Chrome T/V)	**1290-963-2000**	018-574
31.	Collar, Throttle Spring	1022-805-7000	018-564
32.	Screw, Top Cover	**N114-04140**	021-580
33.	Washer, Idle Adjuster	0301-078-1200	021-101
34.	Needle Jet	16164-169-0040	018-560
35.	Needle Jet Holder SDGAA	N413-11A00	———
35A.	Needle Jet Holder	N413-12A00	021-581
*50.	Starter Valve (Choke Plunger)	W1275-028-9901	021-512
*51.	Spring	1290-922-2000	021-582
*52.	O-Ring,	0901-069-6000	021-527
*53.	Cable Holder	W1551-140-9900	021-583
*54.	Cap	16118-166-0040	018-002

Note: If you see "SDGAA" on your carburetor's stamped portion, your main jet and needle jet holder have to be #parts 26A and 35.

NOTE: Do not remove parts that are not shown on this extended view.

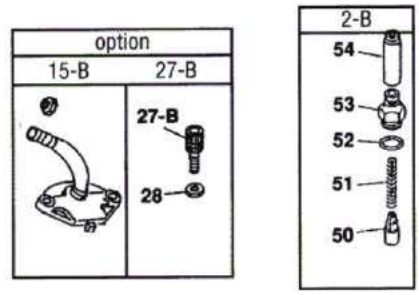

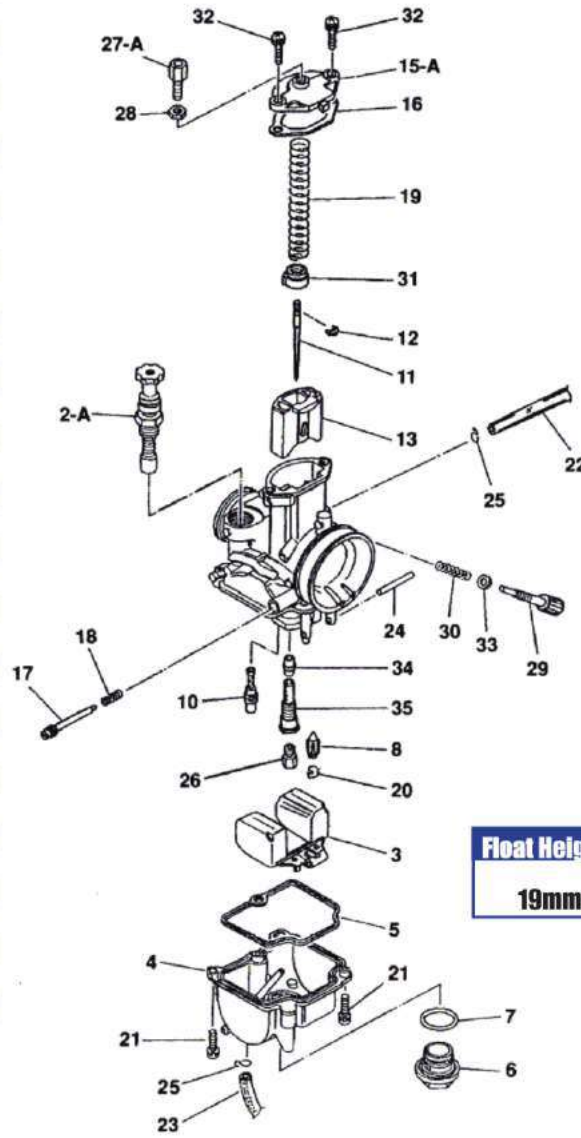

Float Height
19mm

PWK28 Carburetor Dimensions

Size (mm)	A	B	C	D
PWK28	35	49	83	147.4

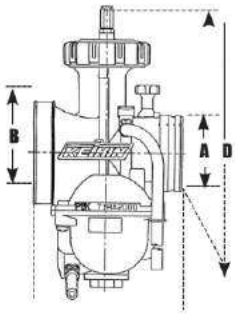

Carburetors are intended for off-road riding and racing use only. Not legal for use in California or other locations where similar pollution laws may apply.

PWK28 Standard Jetting Specifications

Size (mm)	Main Jet	Slow Jet	Jet Needle	Throttle Valve	Float Height	Order No.
PWK28	#135	#38	46 JJH	3.5	19mm	016-144

Sudco PWK 28 Carburetor Rebuild Kit

Sudco rebuild kit for the Keihin PWK28 contains GENUINE Keihin replacement parts. Sold as a kit.

Order No. 020-112

Exploded View No.	Qt	Contents
5.	1	Gasket, Float Bowl
7.	1	O-Ring, Plug Screw
8.	1	Float Valve Complete
12.	1	Clip, Jet Needle
16.	1	Gasket, Top
17.	1	Air Adjust Screw
18.	1	Spring, Air Adjust Screw
20.	1	Clip, Float Valve
21.	2	Screw, Float Bowl
24.	1	Float Pin
29.	1	Idle Adjuster (for Chrome T/V)
30.	1	Spring, (for Chrome T/V)
32.	2	Screw, Top Cover

Sudco Choke Cable System for all PWK's

Includes parts **A thru E** listed below. All PWK carburetors.

Order No. 018-501

A.	Cable Sealing Cap	16118-166-0040	018-002
B.	Choke Plunger	W1275-028-9901	021-512
C.	Choke O-Ring	0901-069-6000	021-527
D.	Spring	1290-922-2000	021-582
E.	Cable Holder	W1551-140-9900	021-583

PWK 28 Throttle Valve Chart

	Cutaway	Keihin No.	Order No.
Rich	1.0	N502-52B00	018-584
↑	2.0	N502-52C00	018-585
	3.0	N502-52D00	018-586
	3.5 **(Std)**	N502-52H00	018-590
	4.0	N502-52E00	018-587
↓	5.0	N502-52F00	018-588
Lean	6.0	N502-52G00	018-589

Tokyo Mods

Tokyomods Drain Plug

Keeps all fuel contaminates including water away from the main jet, helps control fuel slosh and bogging, won't get distorted from over tightening, and easy to reach for quicker jetting changes. Machined from 6061 aluminum. Also fits Keihin FCR-MX, PJ, PWK, PWM, and PE carbs.

Application	Color	Order No.
FCR-MX, PJ, PWK, PWM, PE	Red	024-230R
	Blue	024-230B
	Black	024-230K
	Mag	024-230M

KEIHIN PWK 33-41 Exploded View

Non Air Striker PWK33, 35, 36, 38, 39, 41

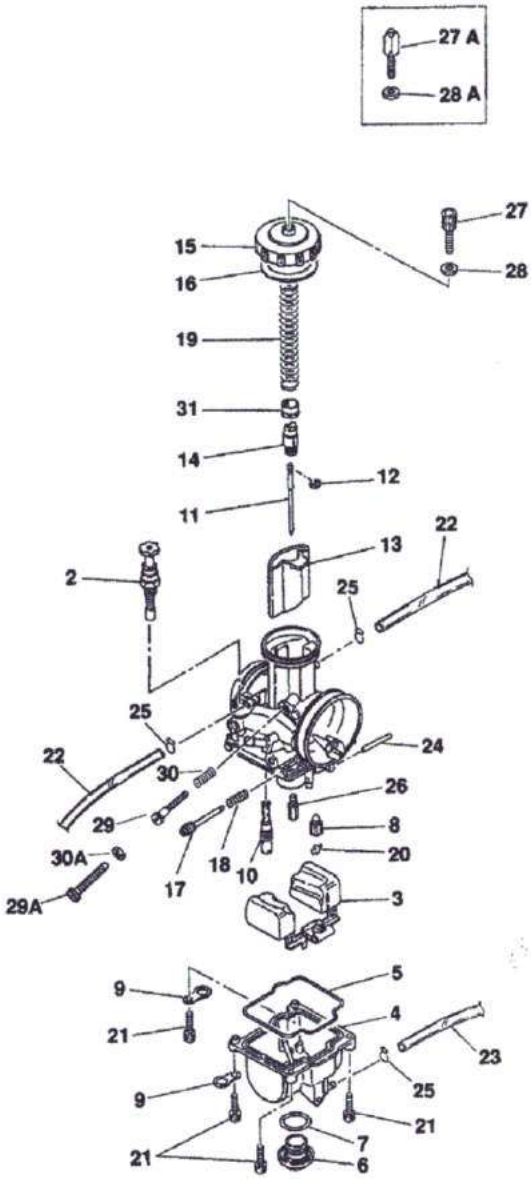

NOTE: Do not remove parts that are not shown on this exploded view.

Quad Vent/Air Striker

***See part numbers** 11, 12, 14, 15, 16,19, 27, 28, 31 from the drawing to the left.

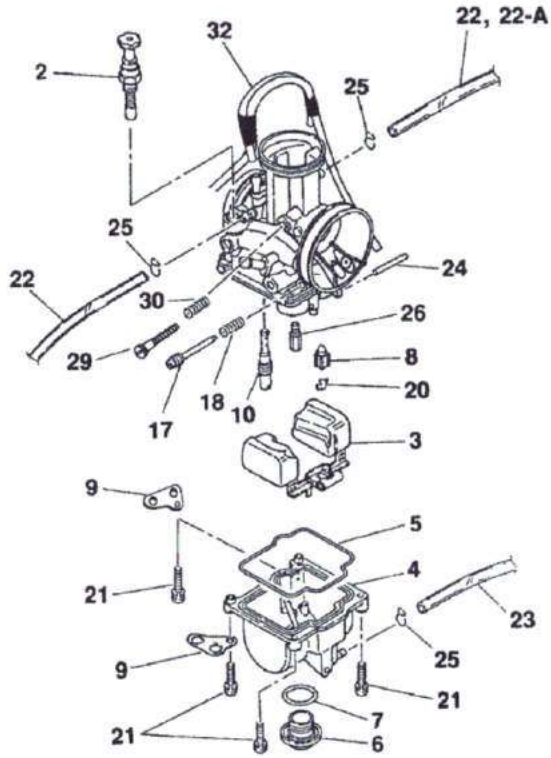

NOTE: Do not remove parts that are not shown on this exploded view.

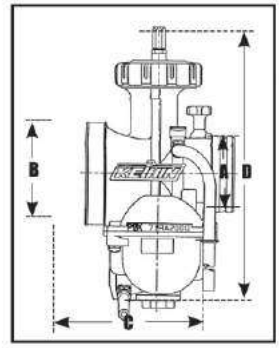

Carburetors are intended for off-road riding and racing use only. Not legal for use in California or other locations where similar pollution laws may apply.

Float Height
16mm

PWK Standard Jetting Specifications

Size (mm)	Main Jet	Slow Jet	Jet Needle	Throttle Valve	Float Height	Order No.
Non Air Striker						
PWK33/S46	#165	#52	48-CGL	6.0	16mm	016-148
PWK35/70R	#160	#68	48-DGK	6.0	16mm	016-150
PWK38/71R	#172	#58	48-DEG	6.0	16mm	016-153
PWK39/72R	#160	#60	48-DGH	6.0	16mm	016-155
PWK41 Pro-Series	#160	#60	48-DGH	6.0	16mm	016-156
Quad Vent/Air Striker						
PWK35	#160	#48	48-DEK	4.5	16mm	016-160
PWK36 Quad Vent	#165	#55	48-DGJ	5.0	16mm	016-163
PWK38	#170	#55	48-DDJ	7.0	16mm	016-167

Size (mm)	A	B	C	D
PWK33	42	59	91	164.3
PWK35	42	59	91	163.3
PWK36	46	63	91	176.6
PWK38	46	63	91	171.6
PWK39	46	63	91	171.6
PWK41	46	63	91	171.6

PWK 33-41 Replacement Parts

Keihin Part No. Highlighted in BOLD RED are included in rebuild kit.

No.	Description	Application	Keihin No.	Order No.
2A.	Starter Valve (pull knob) Complete			
		All PWK	1166-818-2100	018-500
2B.	Choke Cable System	All PWK		018-501
3.	Float	All PWK	W1310-079-9921	018-110
4.	Float Bowl Complete	All PWK	W1350-311-9910	018-502
5.	Gasket, Float Bowl	All PWK	**16163-ND4-7510-M1**	018-113
6.	Plug Screw	All PWK	16162-ND4-7511-M1	018-128
7.	O-Ring, Plug Screw	All PWK	**16173-001-0040**	018-664
8.	Float Valve Complete	All PWK	**1062-814-2100**	018-504
9.	Anchor Plate			
	PWK33 Non Air Striker		16179-428-6711-M1	018-119
	PWK35 Non Air Striker		16179-428-6711-M1	018-119
	PWK36 Quad Vent		16179-KZ4-6900	018-505
	PWK38 Non Air Striker		16179-428-6711-M1	018-119
	PWK39 Non Air Striker		16179-428-6711-M1	018-119
	PWK41 Non Air Striker		16179-428-6711-M1	018-119
	PWK35 Quad Vent/Air Striker		16179-KZ4-6900	018-505
	PWK38 Quad Vent/Air Striker		16179-KZ4-6900	018-505
10.	Slow Jet	All PWK	N424-21-xxx	Pg.148
11.	Jet Needle	All PWK	N427-48-xxx	Pg.146
12.	Clip, Jet Needle	All PWK	**16155-169-0040**	018-033
13.	Throttle Valve		**(see chart below)**	
14.	Cable Holder	All PWK	1101-804-2000	018-526
15.	Top	All PWK	1030-840-2000	018-528
16.	Gasket	All PWK	**W1593-051-9900**	018-016
17.	Air Adjust Screw	All PWK	**W1446-231-9900**	018-089
18.	Spring	All PWK	**W1711-416-9900**	018-090
19.	Throttle Spring			
	PWK33 Non Air Striker		1290-917-2001	018-530
	PWK35 Non Air Striker		1290-917-2001	018-530
	PWK36 Quad Vent		1290-917-2001	018-530
	PWK38 Non Air Striker		1290-920-2000	018-531
	PWK39 Non Air Striker		1290-920-2000	018-531
	PWK41 Non Air Striker		1290-920-2000	018-531
	PWK35 Quad Vent/Air Striker		1290-917-2001	018-530
	PWK38 Quad Vent/Air Striker		1290-920-2000	018-531
20.	Clip, Float Valve	All PWK	**0405-019-1000**	018-674
21.	Screw, Float Bowl	All PWK	**93892-04016-18**	018-122
22.	Bowl Vent Pipe			
	PWK33 Non Air Striker		95003-07042-31	018-534
	PWK35 Non Air Striker		95003-07042-31	018-534
	PWK36 Quad Vent		95003-07042-31	018-534
	PWK38 Non Air Striker		95003-07048-31	018-535
	PWK39 Non Air Striker		95003-07048-31	018-535
	PWK41 Non Air Striker		95003-07048-31	018-535
	PWK35 Quad Vent/Air Striker		95003-07048-31	018-535
	PWK38 Quad Vent/Air Striker		95003-07048-31	018-535

No.	Description	Application	Keihin No.	Order No.
22A.	Bowl Vent Pipe			
	PWK36 Quad Vent		95003-07048-31	018-535
23.	Overflow Pipe	All PWK	95003-05033-31	018-538
24.	Float Pin	All PWK	**W9525-25250**	018-670
25.	Clip	All PWK	W9535-35000	018-098
26.	Main Jet	All PWK	99101-357-xxx	Pg.150
27.	Cable Adjuster	All PWK	1036-804-2000	018-542
27A.	Cable Adjuster (25mm)	All PWK	W9581-59250	018-005
27B.	Cable Adjuster (20mm)	All PWK	W9581-59200	018-306
28.	Nut, Cable Adjuster	All PWK	0208-007-1100	018-544
28A.	Nut, Cable Adjuster	All PWK	W1793-130-9900	018-008
29.	Idle Adjuster (Plastic)	All	1034-853-2000	018-569
29A.	Idle Adjuster (Brass) For non chrome slides			
			1034-826-2002	018-546
30.	Spring	All PWK	1290-963-2000	018-574
30A.	Nut (use with 018-546)			
	PWK35 Non Air Striker		94002-05080-0S	018-548
	PWK38 Non Air Striker		94002-05080-0S	018-548
	PWK39 Non Air Striker		94002-05080-0S	018-548
	PWK41 Non Air Striker		94002-05080-0S	018-548
31.	Collar	All PWK	**1118-929-7000**	018-550
32.	Bowl Vent Pipe, Complete			
	PWK36 Quad Vent		16199-KZ3-6900	018-537
	PWK35 Quad Vent/Air Striker		16199-KZ3-6900	018-537
	PWK38 Quad Vent/Air Striker		16199-KZ3-6900	018-537
	O-Ring, Jet Block (not shown)		1202-834-2000	021-532

Sudco PWK33 - 41mm Carburetor Rebuild Kit

Sudco rebuild kit for Keihin PWK33-41 carburetors contains GENUINE Keihin replacement parts. Sold as a kit.

Description	Application	Order No.
PWK33-41mm	Motorcycle	020-110

PWK Throttle Valve Chart

	I.D. Mark	PWK33 N502-15x02	PWK35 N502-16x03	PWK36 Quad Vent N502-17x01	PWK38, 39, 41 N502-17x01	PWK35 Air Striker N502-15x02	PWK38 Air Striker N502-17x01
Rich	0	—	018-508	018-517	018-517	—	018-517
↑	3.0	—	018-509	018-518	018-518	—	018-518
	4.0	—	018-510	018-519	018-519	—	018-519
	4.5.	018-240	—	—	—	018-240	—
	5.0	018-241	018-511	018-520	018-520	018-241	018-520
	5.5	018-242	—	—	—	018-242	—
	6.0	018-243	018-512	018-521	018-521	018-243	018-521
	6.5	018-244	—	018-525	018-525	018-244	018-525
	7.0	018-245	018-513	018-522	018-522	018-245	018-522
	8.0	—	—	018-523	018-523	—	018-523
	8.5	—	018-514	—	—	—	—
↓	9.0	—	—	018-524	018-524	—	018-524
Lean	9.5	—	018-515	—	—	—	—

KEIHIN PWK 39 Snowmobile Exploded View

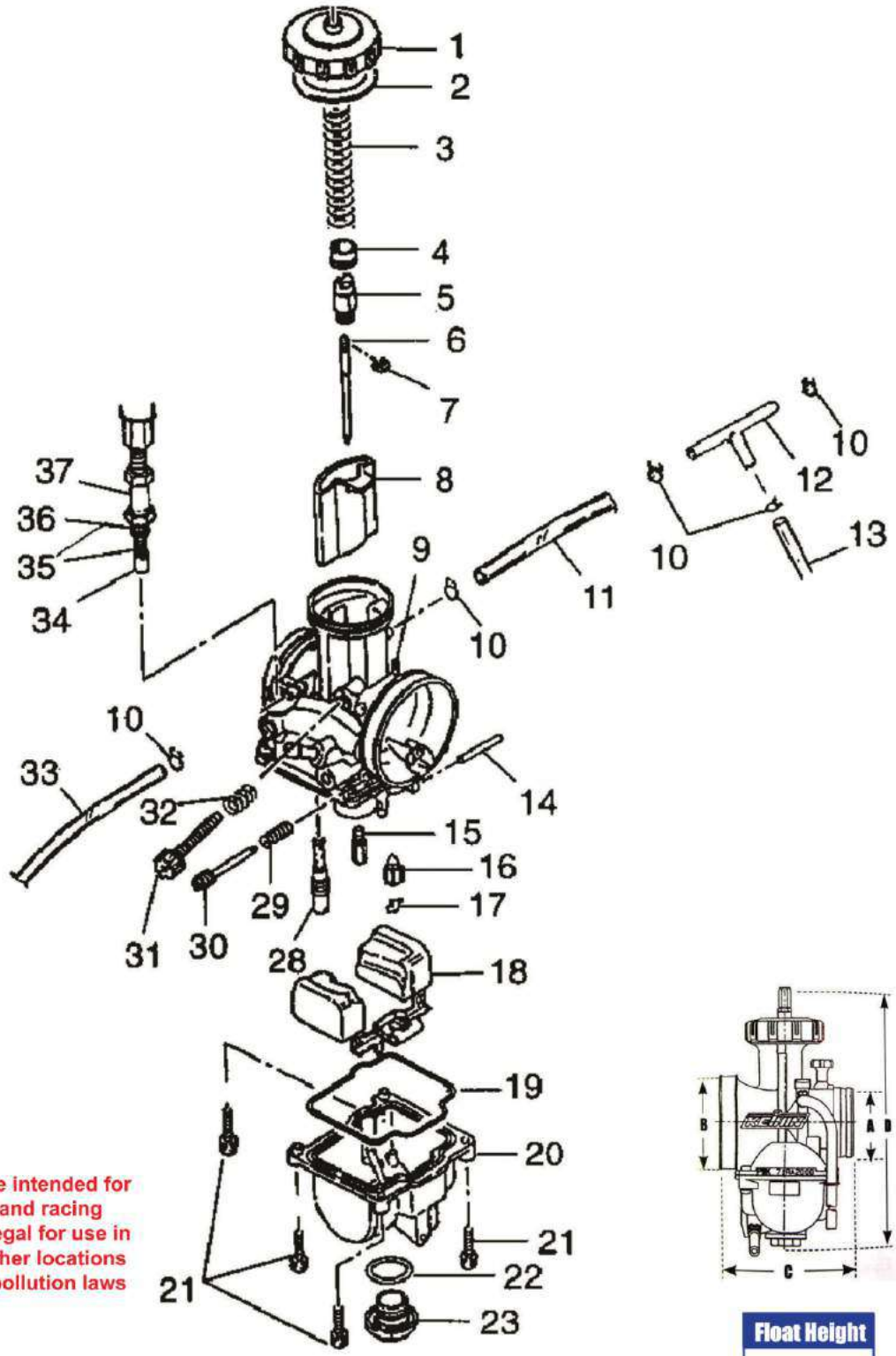

Carburetors are intended for off-road riding and racing use only. Not legal for use in California or other locations where similar pollution laws may apply.

Float Height
19mm

NOTE: Do not remove parts that are not shown on this extended view.

PWK39 Carburetor Dimensions

Size (mm)	A	B	C	D
PWK39	46	63	91	171.6

PWK39 Snowmobile Standard Jetting Specifications

Size (mm)	Main Jet	Slow Jet	Jet Needle	Throttle Valve	Float Height
PWK39	#190	#45	R-1369J	6.5	19mm

KEIHIN PWK 39 Snowmobile Parts

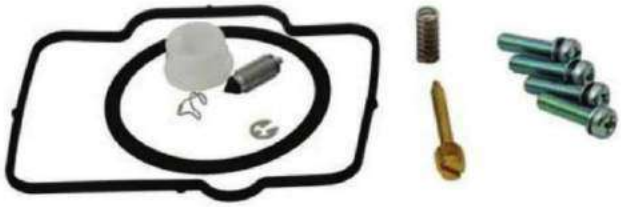

PWK39 Snowmobile Replacement Parts

Keihin Part No. Higlighted in **BOLD RED** are included in rebuild kit.
Applications: Polaris models with PWK39 carburetor.
600XC, 600RMK, 700RMK, 700SKS, 700XC

No.	Description	Keihin No.	Order No.
1.	Top Cap	1030-840-2000	018-528
2.	Gasket, Top	**16110-ND5-7610-M1**	021-518
3.	Spring, Throttle	1290-921-2000	018-531
4.	Collar, Throttle Spring	**1118-A35-7000**	021-524
5.	Holder, Cable	1101-804-2000	018-526
6.	Clip, Jet Needle	**16155-169-0040**	018-033
7.	Jet Needle	W956R-XXXX Series	
	Jet Needle	W956R-1367J	017-170
	Jet Needle	W956R-1368G	017-165
	Jet Needle	W956R-1368J	017-171
	Jet Needle	W956R-1369G	017-166
	Jet Needle	W956R-1369J	017-172
	Jet Needle	W956R-1370G	017-167
	Jet Needle	W956R-1370J	017-173
	Jet Needle	W956R-1371G	017-168
	Jet Needle	W956R-1371J	017-174
	Jet Needle	W956R-1372G	017-169
	Jet Needle	W956R-1372J	017-175
8.	Throttle Valve	N502-17x-02	Pg.137
9.	Cap, Rubber	———	———
10.	Clip, Vent Bowl Pipe	———	———
11.	Pipe (Hose), Black Vent Bowl	———	———
12.	T-Joint	16143-KR3-7510-M1	021-528
13.	Pipe (Hose), Short Blk.Vent Bowl	———	———
14.	Float Pin	W9525-25250	018-670
15.	Main Jet	99101-357-xxx	Pg.150
16.	Float Valve (Needle Valve)	16155-ZG8-L100	018-676
		W9522-53001 (old number)	
17.	Clip, Float Valve	**0405-019-1000**	018-674
18.	Float	W1310-079-9921	018-110
19.	Gasket, Float Bowl	**16163-ND4-7510-M1**	018-113
20.	Float Bowl Comp.	Z050-355-000	021-513
21.	Screw, Float Bowl 4 x 16mm	**N114-04163**	021-519
22.	O-Ring, Plug Screw	16173-001-0040	018-664
23.	Plug Screw, Bowl	1018-807-2000	021-514
28.	Pilot Jet	N424-21-xxx	Pg.148
29.	Spring, Air Adjust	**W1711-416-9900**	018-090
30.	Screw, Air Adjust	**W1446-231-9900**	018-089
31.	Screw, Idle Adjuster	1034-867-2001	021-522
32.	Spring, Idle Adjuster	1290-A04-2000	021-523
33.	Pipe (Hose), Black Vent Bowl	———	———
34.	Valve, Starter (choke plunger)	———	021-512
35.	Spring, Choke	1290-A05-2000	021-526
36.	O-Ring, Choke	0901-069-6000	021-527
37.	Cap, Starter	———	———

Sudco PWK Snowmobile Carburetor Rebuild Kit

Sudco rebuild kit for the Keihin PWK39 snowmobile carburetor contains GENUINE Keihin replacement parts. Sold as a kit.

Order No. 020-111

Exploded View No.	Qt	Contents
2.	1	Gasket, Top Cap
4.	1	Collar, Throttle Spring
6.	1	Clip, Jet Needle
16.	1	Float Valve (Needle Valve)
17.	1	Clip, Float Valve
19.	1	Gasket, Float Bowl
21.	4	Screw, Float Bowl 4 x 16mm
29.	1	Spring, Air Adjust
30.	1	Screw, Air Adjust

Tokyo mods

Tokyomods Drain Plug

Keeps all fuel contaminates including water away from the main jet, helps control fuel slosh and bogging, won't get distorted from over tightening, and easy to reach for quicker jetting changes. Machined from 6061 aluminum. Also fits Keihin FCR-MX, PJ, PWK, PWM, and PE carbs.

Application	Color	Order No.
FCR-MX, PJ, PWK, PWM, PE	Red	024-230R
	Blue	024-230B
	Black	024-230K
	Mag	024-230M

KEIHIN PJ Exploded View

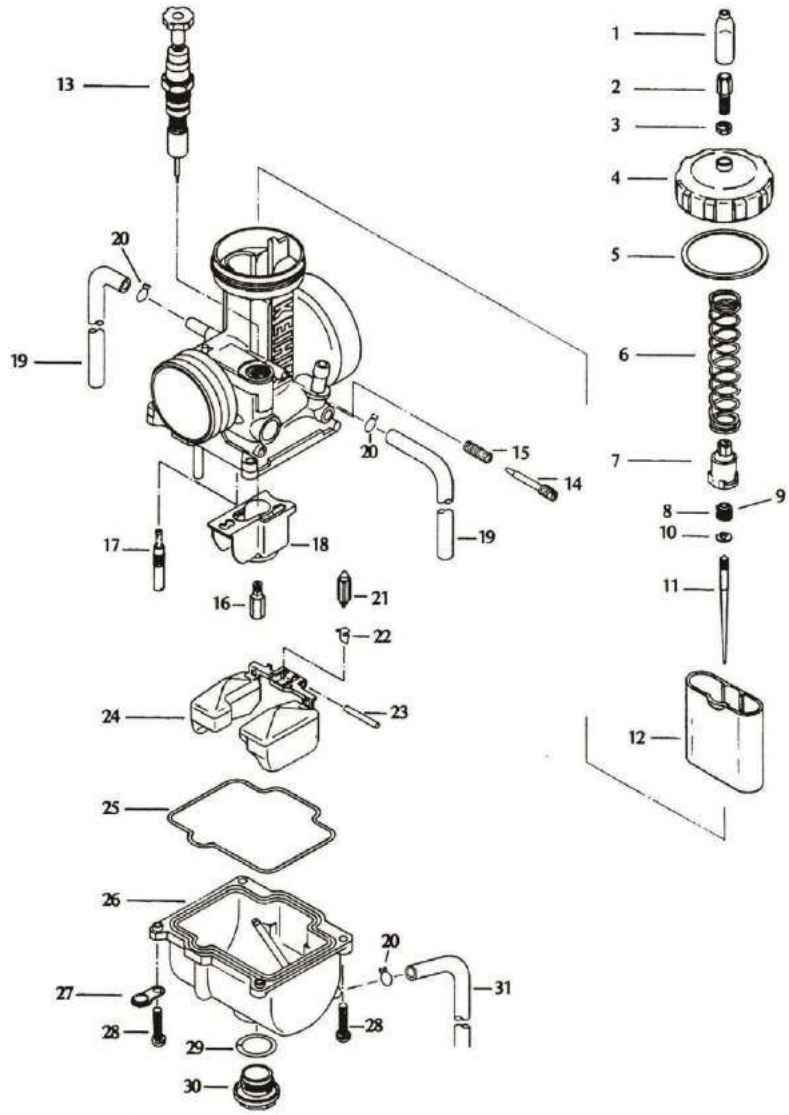

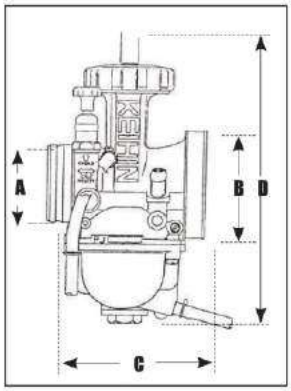

NOTE: Do not remove parts that are not shown on this extended view.

Float Height
16mm

PJ34 Carburetor Dimensions

Size (mm)	A	B	C	D
PJ34	41	59	91	174.0

PJ34 Standard Jetting Specifications

Size (mm)	Main Jet	Slow Jet	Jet Needle	Throttle Valve	Float Height	Order No.
PJ34	#152	#55	48-CEG	6.0	16mm	016-039

Tokyomods Drain Plug

Keeps all fuel contaminates including water away from the main jet, helps control fuel slosh and bogging, won't get distorted from over tightening, and easy to reach for quicker jetting changes. Machined from 6061 aluminum. Also fits Keihin FCR-MX, PJ, PWK, PWM, and PE carburetors.

Application	Color	Order No.
	Red	024-230R
FCR-MX, PJ, PWK, PWM, PE	Blue	024-230B
	Black	024-230K
	Mag	024-230M

Carburetors are intended for off-road riding and racing use only. Not legal for use in California or other locations where similar pollution laws may apply.

PJ Replacement Parts

Keihin Part No. Highlighted in BOLD RED are included in rebuild kit.

Carb Top Kit 34-36mm **018-975**

Includes the following parts:

018-002, 018-005, 018-008, 018-011, 018-015.

No.	Description	Application	Keihin No.	Order No.
1.	Cap,Cable Adjust	34-38mm	16118-166-0040	018-002
2.	Cable Adjuster	34-38mm	W9581-59250	018-005
3.	Nut, Cable Adjuster	34-38mm	W1793-130-9900	018-008
4.	Mixing Chamber,Top	34-36mm	W1591-130-9910	018-011
		38mm	W1591-131-9910	018-012
5.	Gasket, Top	34-36mm	**16110-NC8-0040**	018-015
		38mm	**16110-ND5-7610-M1**	018-016
6.	Throttle Spring	34mm	16050-KA3-7610-M1	018-019
		36mm	16050-KA4-7710-M1	018-020
		38mm	16050-KA5-6910-M1	018-021
7.	Cable Holder	34-38mm	16137-KA3-7610-M1	018-024
8.	Collar	34-38mm	W1706-052-9900	018-027
9.	Spring	34-38mm	16051-KA3-7610-M1	018-030
10.	Clip, Jet Needle	34-38mm	**16115-169-0040**	018-033
11.	Jet Needle	34-38mm	N427-48-xxx	Pg.147
12.	Throttle Valve	34mm	W1502-2J (X) -9900	see chart
		36mm	N502-22 (XX) -0-00	see chart
		38mm	N502-23 (XX) -0-00	see chart
13.	Starter Valve	34-36mm	16046-KA3-7610-M1	018-085
		38mm	16046-KA5-6911	018-086
14.	Air Adjustment Screw	34-38mm	**W1446-231-9900**	018-089
15.	Spring	34-38mm	**W1711-416-9900**	018-090
16.	Main Jet	34-38mm	99101-357-xxx	Pg.150
17.	Slow Jet	34-38mm	N424-21-xxx	Pg.148
18.	Baffler Plate	34-38mm	**16185-KA3-7610-M1**	018-092
19.	Air Vent Pipe	34-38mm	95003-07033-31	021-752
20.	Clip	34-38mm	W9535-35000	018-098
21.	Float Valve	34-38mm	**W1362-019-9900**	018-101
22.	Clip, Float Valve	34-38mm	**W1782-013-990**	018-104
23.	Float Pin	34-38mm	**W9525-25250**	018-670
24.	Float	34-38mm	W1310-079-9921	018-110
25.	O-Ring, Float Bowl	34-38mm	**16163-ND4-7510-M1**	018-113
26.	Float Bowl	34-38mm	W1350-289-9910	018-006
27.	Anchor Plate	34-38mm	16179-428-6711-M1	018-119
28.	Screw, Float Bowl	34-38mm	**93892-04016-18**	018-122
29.	Plug Screw O-Ring	34-38mm	**16173-001-0040**	018-664
30.	Main Jet Plug Screw	34-38mm	16162-ND4-7511-M1	018-128
31.	Overflow Tube	34-38mm	95003-05027-31	018-131

90° Cable Adjuster Assembly

This adjuster has threads on one end, the other end swivels. Includes rubber cap, locknut, cable adjuster and 90° tube. Works on Keihin and Mikuni carburetor caps.

Order No. 007-731

PJ Throttle Valve Chart

	Cutaway	PJ34	PJ36	PJ38
		W1505-2Jx-9900	N502-22xx0-01	N502-23xx0-01
Rich	4.0	018-040	018-054	018-068
↑	5.0	018-042	018-056	018-070
	6.0 **(Std)**	018-044	018-058	018-072
↓	7.0	018-046	018-060	018-074
Lean	8.0	018-048	018-062	018-076

Keihin PJ Carburetor

Oval slide PJ34 carburetor for ATV and Offroad motorcycles. The oval slide enables the engine to respond much quicker than with a conventional round slide carburetor.

Carburetor	Description/Mark	Order No.
PJ34 Standard	PJ34/67R	016-039

Use the following part number when ordering for special jetting request. **Please note:** Special Set PJ carburetor is pre-jetted to your request or specific application. Please specify exact jetting details for each special set carburetor ordered.

PJ34 Special Set	PJ34/67R	016-180

Sudco PJ Carburetor Rebuild Kit

Sudco rebuild kit for the Keihin PJ34-38 contains GENUINE Keihin replacement parts. Sold as a kit.

Order No. 020-115

Exploded View No.	Qt	Contents
5.	1	Gasket, Top (PJ34, PJ36)
	1	Gasket, Top (PJ38)
10.	1	Clip, Jet Needle
14.	1	Air Adjustment Screw
15.	1	Spring
18.	1	Baffler Plate
21.	1	Float Valve
22.	1	Clip, Float Valve
23.	1	Float Pin
25.	1	O-Ring, Float Bowl
28.	4	Screw, Float Bowl
29.	1	Plug Screw O-Ring

KEIHIN PWM 38 Exploded View

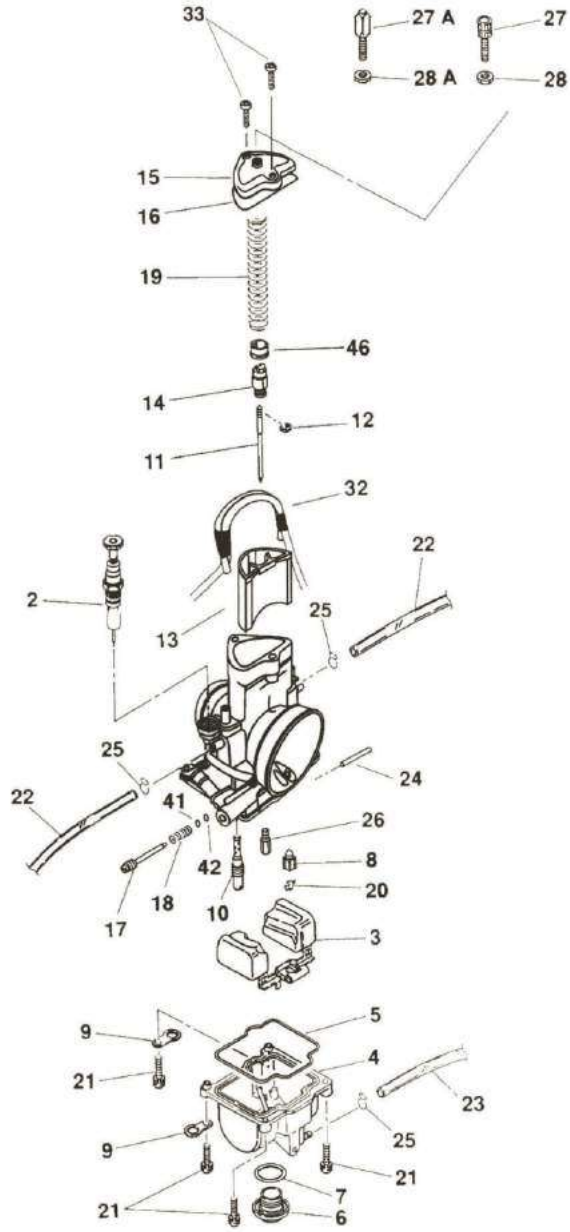

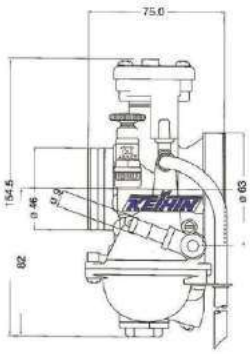

NOTE: Do not remove parts that are not shown on this extended view.

Float Height
6.5mm

Carburetors are intended for off-road riding and racing use only. Not legal for use in California or other locations where similar pollution laws may apply.

PWM38 Carburetor Dimensions

Size (mm)	A	B	C	D
PWM38 Quad Vent	46	63	75	154.5

PWM38 Quad Vent Standard Jetting Specifications

Size (mm)	Main Jet	Slow Jet	Jet Needle	Throttle Valve	Float Height	Keihin No.	Order No.
PWM38	#175	#50	48-CCJ	6.0	6.5mm	PWM38/S64	016-170

PWM Replacement Parts

Keihin Part No. Highlighted in BOLD RED are included in rebuild kit.

No.	Description	Keihin No.	Order No.
2.	Starter Valve Complete	1166-834-2200	018-201
3.	Float	1052-856-2100	018-202
4.	Float Bowl Complete	1050-898-2100	018-203
5.	Gasket, Float Bowl	**16163-ND4-7510-M1**	018-113
6.	Plug Screw	16162-ND4-7511-M1	018-128
7.	O-Ring, Plug Screw	**16173-001-0040**	018-664
8.	Float Valve Complete	**1062-814-2100**	018-504
9.	Anchor Plate	16174-KZ4-6900	018-204
10.	Slow Jet	N424-21-xxx	Pg.148
11.	Jet Needle	N427-48-xxx	Pg.147
12.	Clip, Jet Needle	**16115-169-0040**	018-033
13.	Throttle Valve	N502-31x00	See chart
14.	Cable Holder	1101-805-2000	018-205
15.	Top	1030-872-2000	018-206
16.	Gasket, Top	**1202-863-6000**	018-207
17.	Air Adjust Screw	**W1446-231-9900**	018-089
18.	Spring, Air Adjust Screw	**W1711-416-9900**	018-090
19.	Spring, Throttle Valve	1290-920-2000	018-531
20.	Clip, Float Valve	**0405-019-1000**	018-674
21.	Screw, Float Bowl	**93500-04014-1H**	018-209
22.	Bowl, Vent Pipe	95003-07048-31	018-535
23.	Overflow Pipe	95003-05033-31	018-538
24.	Float Pin	**W9525-25250**	018-670
25.	Clip	W9535-35000	018-098
26.	Main Jet (hex type)	99101-357-xxx	Pg.150
27A	Cable Adjuster	W9581-59250	018-005
27B.	Cable Adjuster	W9581-59200	018-306
28.	Nut, Cable Adjuster	0208-007-1100	018-544
28A	Nut, Cable Adjuster	W1793-130-9900	018-008
31.	Cable Sealing Cap (Collar)	16118-166-0040	018-002
32.	Bowl Vent Pipe Complete	16199-KZ3-6900	018-537
33.	Screw (Top)	**93500-04012-1H**	018-211
41.	Washer	**16085-KG8-9010-M1**	018-208
42.	O-Ring	**16075-KG8-9010-M1**	021-043
46.	Collar	1118-929-7000	018-550

PWM Throttle Valve Chart

	Cutaway	Keihin No.	Order No.
Rich	4.0	N502-31C00	018-252
↑	5.0	N502-31D00	018-253
	6.0 (Std)	N502-31E00	018-254
↓	7.0	N502-31F00	018-255
Lean	8.0	N502-31G00	018-256

Keihin PWM38 Carburetor

The Keihin PWM38 carburetor is the "Hot Ticket" for 125 to 250cc Road Racing and Shifter Kart applications and 250cc Motocross.
The exclusive features built into the Keihin PWM38 result in improved top-end power, throttle response, and overall two-stroke engine performance. PWM38 carburetor sold standard jetting or Special Set, please specify when ordering.

Carburetor	Order No.
PWM38 Quad Vent	016-170

Please note: Special Set PWM carburetor is pre-jetted to your request or specific application. Please specify exact jetting details for each special set carburetor ordered.

PWM38 Quad Vent	016-204

Sudco PWM38 Carburetor Rebuild Kit

Sudco rebuild kit for the Keihin PWM contains GENUINE Keihin replacement parts. Sold as a kit.

Order No. 020-120

Exploded View No.	Qt	Contents
5.	1	Gasket, Float Bowl
7.	1	O-Ring, Plug Screw
8.	1	Float Valve Complete
12.	1	Clip, Jet Needle
16.	1	Gasket, Top
17.	1	Air Adjust Screw
18.	1	Spring, Air Adjust Screw
20.	1	Clip, Float Valve
21.	4	Screw, Float Bowl
24.	1	Float Pin
33.	2	Screw (Top)
41.	1	Washer
42.	1	O-Ring

Tokyo Mods

Tokyomods Drain Plug

Keeps all fuel contaminates including water away from the main jet, helps control fuel slosh and bogging, won't get distorted from over tightening, and easy to reach for quicker jetting changes. Machined from 6061 aluminum. Also fits Keihin FCR-MX, PJ, PWK, PWM, and PE carbs.

Application	Color	Order No.
FCR-MX, PJ, PWK, PWM, PE	Red	024-230R
	Blue	024-230B
	Black	024-230K
	Mag	024-230M

KEIHIN PE Exploded View

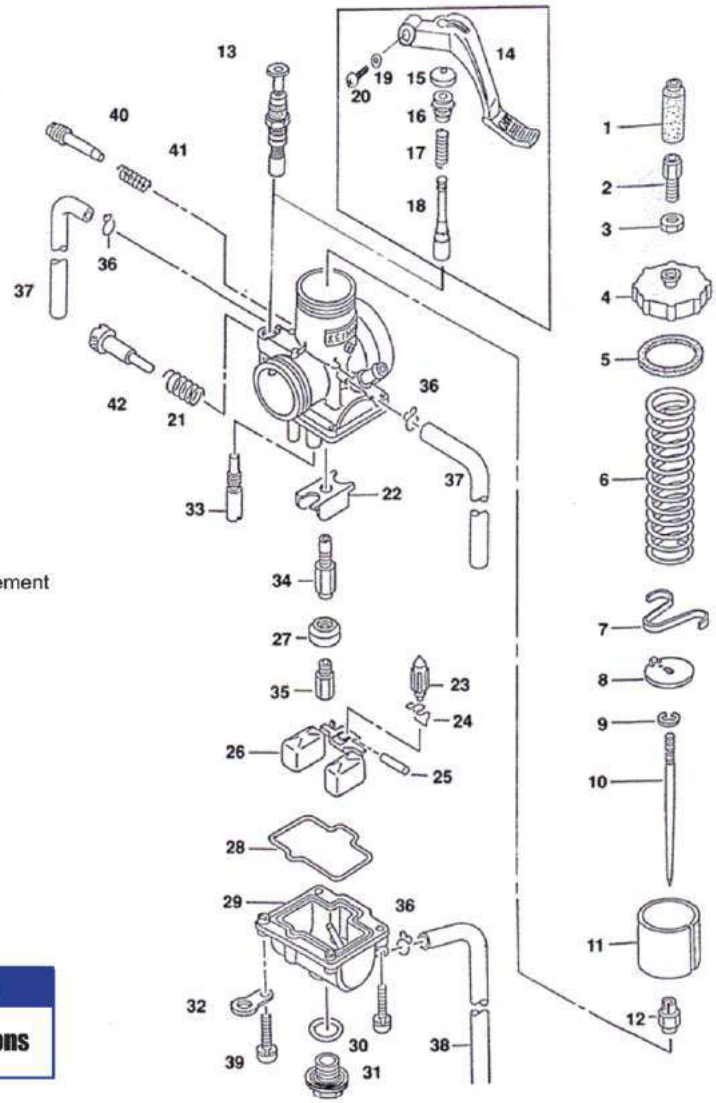

Keihin PE Series Carburetor

Whether you want a tunable performance carburetor or a replacement for your worn out original, the PE series is the right choice. Available sizes include PE20, 22, 24, 28 and PE38.

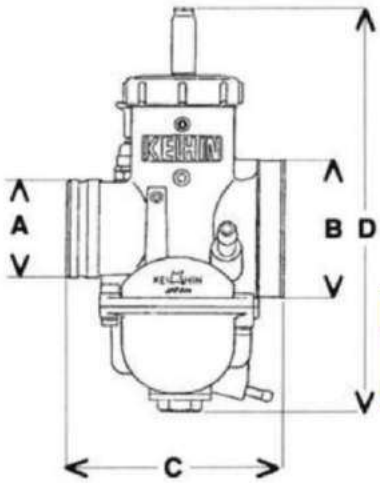

Float Height

See Specifications

NOTE: Do not remove parts that are not shown on this extended view.

PE Carburetor Dimensions

Size (mm)	A	B	C	D
PE20	31	46	83	136
PE22	31	46	83	136
PE24	31	46	83	142.1
PE26	33	48	83	140.5
PE28	35	50	83	150.9
PE38	44	62	95	182.5

PE Standard Jetting Specifications

Size (mm)	Main Jet	Slow Jet	Jet Needle	Throttle Valve	Float Height	Keihin No.	Order No.
PE20	#100	#58	36S00	4.0	19mm	PE20/R69	016-122
PE22	#102	#40	94D00	3.5	19mm	PE22/18S	016-123
PE24	#115	#52	36S00	3.0	19mm	PE24/S14	016-126
PE26	#142	#40	46JFH	2.0	19mm	PE26/78P	016-130
PE28	#125	#40	46-JFN	2.0	19mm	PE28/R37	016-127
PE38	#160	#60	48-AJM	3.5	22.5mm	PE38/R50	016-124

PE Throttle Valve Chart

Cutaway	PE20 G1502-QUx-9900	PE22 G1502-QHx-9900	PE24 G1502-1Sx-9900	PE38 G150204G-9900
Rich 2.0	———	———	———	———
2.5	———	———	———	———
3.0	———	———	———	———
3.5	———	———	———	———
4.0	———	———	021-374	021-330
4.5	———	———	———	———
5.0	———	———	———	———
5.5	———	———	———	———
Lean 6.0	———	———	———	———

Tokyomods Drain Plug

Keeps all fuel contaminates including water away from the main jet, helps control fuel slosh and bogging, won't get distorted from over tightening, and easy to reach for quicker jetting changes. Machined from 6061 aluminum. Fits Keihin FCR-MX, PJ, PWK, PWM, and PE carbs.

See page 143 for colors, and order numbers

PE Replacement Parts

No.	Description	Application	Keihin No.	Order No.
1.	Cap Cable Holder	20-24mm	16118-166-0040	018-002
		30mm	16118-166-0040	018-002
		34-38mm	W1597-023-9900	018-303
2.	Cable Adjuster	20-24mm	W9581-59250	018-005
		30mm	W9581-59250	018-005
		34-38mm	W9581-59200	018-306
3.	Nut, Cable Adjuster	20-24mm	W1793-130-9900	018-008
		30mm	W1793-130-9900	018-008
		34-38mm	W1793-121-9900	018-309
4.	Top	20-24mm	G591-145-9900	021-565
		36-38mm	G591-093-9900	021-781
5.	Gasket	20-24mm	W1593-040-9900	018-320
		26-28mm	W1593-039-9900	021-798
		36-38mm	W1593-038-9900	021-782
6.	Throttle Spring	20mm	G1711-614-9900	021-566
		22mm	16050-GF5-6710-M1	021-785
		24mm	16050-GF5-7410-M1	021-784
		36-38mm	G1711-484-9900	021-783
7.	Clip, T.V. Plate	20-24mm	16114-GF5-0040	021-567
		26-28mm	W9574-20000	018-338
		36-38mm	W9574-3500	018-341
8.	Throttle Valve Plate	22-24mm	W1506-028-9900	018-344
		26-28mm	W1506-027-9900	018-345
		30mm	W1506-018-9900	018-346
		34mm	W1506-019-9900	018-347
		36-38mm	G1506-017-9900	021-786
9.	Clip, Jet Needle	20-38mm	16115-169-0040	018-033
10.	Jet Needle	20-24mm	G1427-36x-9900	See chart
			1024-36x-9900-old number	
		26-28mm	N427-46-xxx	Pg.147
		34-38mm	N427-48-xxx	Pg.147
11.	Throttle Valve	20mm	G1502-OUx-9900	———
		22mm	G1502-OHx-9900	———
		24mm	G1502-1Sx-9900	Pg.144
		38mm	G1502-04G-9900	Pg.144
12.	Needle Jet	20-26mm	16164-169-0040	018-560
13.	Choke Valve	26-28mm	16046-KA5-7710-M1	021-584
		36-38mm	16046-KA5-7710-M1	021-584
14.	Choke Lever	20-24mm	1165-031H-9900	021-568
15.	Rubber Cap	20-24mm	16148-PJ7-0051	021-569
16.	Choke Lever Holder	20-24mm	W1551-035-9901	018-362
17.	Choke Valve Spring	20-24mm	W1711-403-9900	018-372
18.	Choke Valve	20-24mm	W1275-020-9900	018-358
19.	Collar	20-24mm	W1704-362-9900	021-570
20.	Screw	20-24mm	93500-04012-1H	018-211
21.	Spring	20-28mm	16052-KG8-9010-M1	018-382
		30-38mm	G1711-286-9901	018-383
22.	Baffle Plate	34-38mm	G1130-004-9900	021-585
23.	Float Valve	20-28mm	W1362-020-9901	018-389
		30-38mm	W1362-024-9900	021-787
24.	Clip, Float Valve	20-38mm	W1782-013-9900	018-104
25.	Float Pin	20-38mm	W9525-25250	018-670
26.	Float	20-22mm	W1310-067-9902	018-396
		26mm	W1310-067-9902	018-396
		28mm	W1310-080-9901	018-397
		28mm	W1310-080-9902	———
		30-36mm	G1310-059-9901	021-789
		38mm	G1310-058-9911	021-788
27.	Jet Holder	20-28mm	16168-GC4-7010-M1	018-402
		30-38mm	16168-KA4-0040	018-403
28.	Gasket, Float Bowl	20-28mm	W1354-042-9900	018-406
		30-38mm	16163-ND4-7510-M1	018-113
29.	Float Bowl	20-22mm	W1350-239-9903	018-409
		24mm	W1350-291-9901	021-791
		30-38mm	W1350-189-9910	021-790
30.	Plug Screw O-Ring	20-38mm	16173-001-0040	018-664
31.	Plug Screw	20-38mm	16162-ND4-7511-M1	018-128
32.	Anchor Plate	30-38mm	16179-428-6711-M1	018-119
33.	Slow Jet	20-22mm	N424-21-xxx	Pg.148
		24mm	N424-32-xxx	Pg.148
		26-30mm	N424-21-xxx	Pg.148
		34-38mm	N424-22-xxx	Pg.148
34.	Needle Jet	20mm	G1413-34A-9900	021-793
		22mm	16165-GC4-7010-M1	021-794
		24-28mm	G1413-34A-9900	021-793
		30-38mm	16164-KA5-0041	021-792
35.	Main Jet	20-38mm	99101-357-xxx	Pg.151
36.	Clip/Pipe	20-38mm	W9535-35000	018-098
37.	Bowl, Vent Pipe	20-28mm	95003-07027-31	021-571
		34-38mm	95003-07039-31	021-795
38.	Overflow Pipe	20-28mm	95003-07030-31	———
		30-38mm	95003-05030-31	021-796
39.	Screw, Float Bowl	20-38mm	93892-04016-18	018-122
40.	Air Adjust Screw	20-22mm	16080-KG8-9010-M1	021-573
		24mm	W1446-135-9900	021-797
		26-38mm	16080-KG8-9010-M1	021-573
41.	Spring	20-38mm	W1711-416-9900	018-090
42.	Throttle Stop Screw	20-22mm	W1536-120-9900	021-574
		24-28mm	W1536-105-9901	018-378
		30-38mm	W1536-065-9900	018-379

Cable Adjuster Holder

Cable adjuster holder to be used with Keihin PE20-28 Throttle Stop Screw (#42).

Order No. 021-799

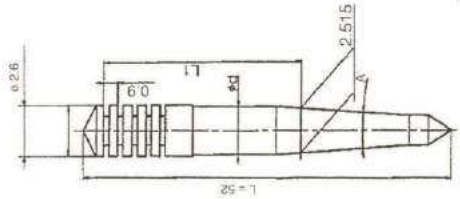

PE20-24mm Jet Needles 1024-36 ( ) H-9900

Jet Needle selection notes: (see chart at bottom)

1. Taper and diameter are the 2 primary dimensions.
2. Larger diameter is leaner at low speeds.
3. Larger taper angle becomes richer faster as speed increases.
4. If diameter and taper are the same, larger L1 will stay leaner longer.
5. A higher clip position will stay lean longer.

Mark	Taper A	L1 Length	Diameter D	Order No.
A	2° 00'	21.98	2.485	017-700
B	2° 00'	22.43	2.435	017-701
C	2° 00'	22.43	2.495	017-702
D	2° 00'	21.98	2.495	017-703
E	2° 00'	23.78	2.445	017-704
F	2° 26'	23.84	2.525	017-705
G	3° 00'	23.89	2.515	017-706
H	3° 00'	23.89	2.525	017-707
J	3° 00'	23.89	2.535	017-708
K	3° 00'	23.89	2.505	017-709
L	3° 33'	27.22	2.485	017-710
N	3° 33'	23.92	2.545	017-712
P	3° 33'	27.22	2.475	017-713
Q	3° 33'	27.22	2.525	017-714
R	3° 33'	27.22	2.545	017-715
S	3° 33'	25.72	2.475	017-716

KEIHIN Jet Needle for PE, PJ, PWK, PWM

N427-48 PJ34-38, PE36, PWK33-39, PWM38

C — Taper
G — L1
J — Diameter

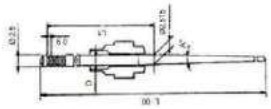

Operations affected by needle selection

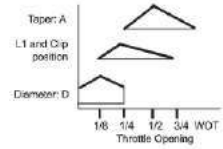

Rich ← 1/8 to 1/4 Throttle → Lean

Diameter (d-1) mm

Taper (A) In degrees	(L1) length in mm		A=2.605	B=2.615	C=2.625	E=2.645	F=2.655	G=2.665	H=2.675	J=2.685	K=2.695	L=2.705	M=2.715	N=2.725	P= 2.735	Q=2.745
A 1° 00′	C=36.35	RICH	—	—	—	—	—	—	—	—	—	—	—	—	—	—
	E=38.15	↑	—	—	—	—	AEF/017-407	AEG/017-071	—	AEJ/017-000	—	AEL/017-001	AEM/017-410	AEN/017-002	AEP/017-411	AEG/017-003
	G=39.95		—	—	—	—	—	—	—	—	—	—	—	—	—	—
	J=41.75	↓ LEAN	—	—	—	—	—	—	—	—	AJK/017-413	—	AJM/017-414	—	AJP/017-415	—
B 1° 15′	C=36.35	RICH	—	—	—	—	—	BEG/017-006	—	BEJ/017-005	—	BEL/017-004	BEM/017-420	BEN/017-007	BEP/017-421	BEQ/017-008
	G=39.95	LEAN	—	—	—	—	BGF/017-423	BGG/017-009	BGH/017-424	BGJ/017-010	—	BGL/017-011	BGM/017-425	BGN/017-012	BGP/017-426	BGQ/017-070
C 1° 34′	C=36.35	RICH	—	—	—	—	—	CCG/017-460	CCH/017-461	CCJ/017-462	CCK/017-463	CCL/017-464	CCM/017-465	CCN/017-466	—	—
	E=38.15	|	—	—	—	—	CEF/017-429	CEG/017-021	—	CEJ/017-019	CEK/017-430	CEL/017-017	CEM/017-431	CEN/017-022	CEP/017-432	CEQ/017-023
	G=39.95	LEAN	—	—	—	—	CGF/017-480	CGG/017-024	CGH/017-020	CGJ/017-025	CGK/017-018	CGL/017-016	CGM/017-015	CGN/01-014	CGP/017-481	CGQ/017-013
D 1°45′	C=36.35	RICH	DCA/017-784	—	—	DCE/017-488	DCF/017-489	—	DCH/017-486	DCJ/017-487	DCK/017-490	DCL/017-491	DCM/017-492	DCN/017-493	DCP/017-494	DCQ/017-495
	D=36.80	↕	DDA/017-496	DDB/017-497	DDC/017-498	DDE/017-499	—	—	—	DDJ/017-500	DDK/017-501	DDL/017-502	DDM/017-503	—	—	—
	E=38.15		—	—	—	DEE/017-505	DEF/017-506	DEG/017-034	—	DEJ/017-032	DEK/017-508	DEL/017-029	DEM/017-510	DEN/017-035	DEP/017-511	DEQ/017-036
	G=39.95	LEAN	—	—	—	—	—	DGG/017-037	DGH/017-033	DGJ/017-031	DGK/017-030	DGL/017-038	DGM/017-028	DGN/017-027	—	DGQ/017-026
E 2° 00′	C=36.35	RICH	ECA/017-442	ECB/017-437	ECC/017-438	ECE/017-440	ECF/017-441	ECG/017-443	ECH/017-444	ECJ/017-445	ECK/017-446	ECL/017-447	—	ECN/017-448	—	ECQ/017-449
	E=38.15	|	—	—	—	EEE/017-039	EEF/017-040	EEG/017-041	EEH/017-450	EEJ/017-451	EEK/017-452	EEL/017-453	EEM/017-454	EEN/017-455	EEP/017-456	EEQ/017-457
	G=39.95	LEAN	—	—	—	EGE/017-540	EGF/017-541	EGG/017-048	EGH/017-049	EGK/017-046	EGK/017-045	EGL/017-045	EGM/017-044	EGN/017-044	EGP/017-050	EGQ/017-042
F 2° 15′	E=38.15		—	—	—	—	—	FEG/017-544	FEH/017-454	FEJ/017-546	—	—	—	—	—	—
G 2° 26′	F=38.60		—	—	—	—	GFE/017-550	GFF/017-551	GFG/017-552	—	—	—	GFN/017-555	—	—	—
J 3°	F=38.60		—	—	—	—	—	—	—	—	—	—	JFN/017-560	—	—	—

Lean ↓ 1/8 to 1/4 Throttle ↓ Rich

OEM-N427-48- ❑❑❑ Series Conversion Chart

1. How To Read Marks

1.) Mark on OEM Jet Needle (6digits)

- 1st digit of MARK on OEM's tells you the KEIHIN Part Number.
- NEXT TWO DIGITS (2nd and 3rd) tell you TAPER angle.
- NEXT TWO DIGITS (4th & 5th) tell you DIAMETER of needle.
- LAST DIGIT (6th) tells you L1.

2.) Mark on Option Jet Needle (3digits)

- 1st digit is for TAPER angle.
- 2nd digit is for L1.
- Last digit id for DIAMETER.

2. Conversion Table

1.) TAPER OEM	OPTION		2. DIAMETER OEM	OPTION		OEM	OPTION		3) L1 OEM	OPTION	
11	B	Lean	60	A	Rich	72	N	Rich	A	A	Rich
13	C	↑	61	B	↑	73	P	↑	B	B	↑
14	D	↕	62	C	↕	74	Q	↕	E	C	↕
20	E	↕	63	D	↕	75	R	↕	F	D	↕
22	F	↓	64	E	↕	76	S	↕	J	E	↕
30	J	Rich	65	F	↕	77	T	↕	K	F	↕
			66	G	↕	78	U	↕	N	G	↕
			67	H	↕	79	V	↕	P	H	↕
			68	I	↕	80	W	↕	S	J	↕
			69	K	↕	81	X	↕	T	K	↕
			70	L	↓	82	Y	↓	W	L	↓
			71	M	Lean	83	Z	Lean	Y	M	Lean

*Not all OEM needles are available as option needles.

3. Examples for Conversion

OEM	NEEDLE	OPTION
R 1 1	6 6 J	→ B E G
R 1 3	6 8 N	→ C G J
R 1 4	7 0 N	→ D G L
R 2 0	7 2 N	→ E G N

Taper — Diameter — L1 → Taper — Diameter — L1

The MARK ORDER of OEM needle is NOT the same as OPTION's DO NOT FORGET IT.

N84x, N85x Jet Needle to N428-48xxx

OEM MARK	OPTION MARK	OEM MARK	OPTION MARK
N84A	CFF	N84I	CFP
N84B	CFG	N84J	CFQ
N84C	CFH	N84K	CFR
N84D	CFJ	N85A	CCF
N84E	CFK	N85B	CCG
N84F	CFL	N85C	CCH
N84G	CFM	N85D	CCJ
N84H	CFN	N85E	CCK

NOTE: N84x series are dual taper. N85x series are triple taper, therefore this chart will only give approximate comparison. Change main jet to two size larger with N428-48 series for N85 series.

KEIHIN Jet Needles for CVH, PE26-28, PWK28

N427-46 PE26-28, PWK28

J	J	H
Taper	L1	Diameter

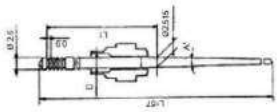

Operations affected by needle selection

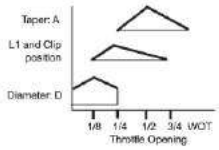

Rich ← 1/8 to 1/4 Throttle → Lean

Lean ↑ 1/8 to 1/4 Throttle ↓ Rich

Diameter (d-1) mm

Taper (A) In degrees	(L1) length in mm		D=2.605	E=2.405	F=2.415	G=2.425	H=2.435	J=2.445	K=2.455	L=2.465	M=2.475	N=2.485	P=2.495	Q=2.505	S= 2.505
G 2° 26′	F=22.25	RICH	—	—	—	—	—	—	GFH/017-610	—	GFK/017-612	—	—	—	—
	J=25.40	↕ LEAN	—	—	—	—	—	—	AEG/017-615	—	GJK/017-616	—	—	—	—
H 2° 45′	F=22.25	RICH	—	—	HFF/017-617	HFG/017-618	HFH/017-619	—	HFK/017-620	—	—	—	—	—	—
	K=25.85	↕	—	—	HKF/017-650	HKG/017-651	HKH/017-652	HKJ/017-653	HKK/017-654	HKL/017-655	—	—	—	—	—
	L= 27.20	LEAN	—	—	—	HLG/017-621	HLH/017-622	HLJ//017-623	—	—	—	—	—	—	—
J 3° 00′	F=22.25	RICH	—	—	—	JFG/01-625	—	JFJ/017-626	—	JFL/017-627	—	JFN/017-051	JFP/017-628	JFQ/017-052	JFS/017-053
	G=23.60	↕	—	—	—	—	—	—	—	—	—	JGN/017-017	—	JGQ/017-055	JGS/017-056
	J=25.40	LEAN	JJD/017-179	JJE/017-185	JJF/017-166	JJG/017-187	JJH/017-180	JJJ/017-188	JJK/017-189	JJL/017-630	JJM/017-630	JJN/017-182	—	JJQ/017-183	JJS/017-184
	L=27.20		—	—	JLF/017-631	JLG/017-632	JLH/017-633	JLJ/017-634	—	—	—	—	—	—	—
K 3° 15′	L=27.20	RICH ↕ LEAN	—	—	—	KLG/017-661	KLH/017-662	KLJ/017-663	KLK/017-664	—	—	—	—	—	—
L 3° 33′	G=23.60	RICH	—	—	—	—	LGH/017-636	LGJ/017-057	—	LGL/017-058	—	LGN/017-059	—	LGQ/017-060	LGS/017-061
	J=25.40	↕ LEAN	—	—	—	LJG/017-062	LJH/017-640	LJJ/017-641	—	—	—	—	—	—	—
M 3° 50′	J=25.40	RICH	—	—	—	—	—	—	—	—	—	MJN/017-067	—	MJQ/017-068	MJS/017-069
	L=27.20	↕ LEAN	—	—	—	—	—	—	—	MLL/017-190	—	MLN/017-919	—	MLQ/017-192	MLS/017-193

N427-68 KEIHIN PWK28 (N68A) [Twin Taper Needle]

Taper	L1	Diameter

Rich ← 1/8 to 1/4 Throttle → Lean

1/8 to 1/4 Throttle ↓

Diameter (d-1) mm

Taper (A) In degrees	(L1) length in mm		O=2.435
A 1° (Initial) 3° (secondary)	O=27.45	RICH ↕ LEAN	AOO/017-595

N427-5 Keihin Harley Davidson CVH

MA	H	R
Taper	L1	Diameter

Rich ← 1/8 to 1/4 Throttle → Lean

1/8 to 1/4 Throttle ↓

Diameter (d-1) mm

Taper (A) In degrees	(L1) length in mm		R=2.750	S=2.760
A 1° 35′	H=24.25	RICH ↕ LEAN	AHR/017-575	AHS/017-580
	J=23.80		AJR/017-576	AJS/017-581
	K=23.35		AKR/017-577	—

KEIHIN Slow Jets (Pilot)

N424-21-XXX

Applications: Aftermarket CVK20, Aftermarket and OEM FCR-MX, PD22, PE20, 26, 28, 30mm, PJ34, 36, 38mm, PWM 34, 36, 38mm, PWK28, 33, 35, 38, 39mm, PWK36 Quad Vent, PWK 35, 38 Quad Vents/ Air Strikers, **Honda** CBR1000F Hurricane (87-88), GL1500 Valkyrie, ATC200 (81-83), ATC250R (83-84), FL350R Odyssey (1985), FL400 Pilot (88-89), TRX450R (2006), CRF450R (02-05), CR500R, XR650R, **Kawasaki** KX125, KX250, KX500 with Keihin PWK carburetor.

Size	Order No.	Size	Order No.	Size	Order No.
#35	019-005	#50	019-011	#65	019-017
#38	019-006	#52	019-012	#68	019-018
#40	019-007	#55	019-013	#70	019-019
#42	019-008	#58	019-014	#72	019-020
#45	019-009	#60	019-015	#75	019-021
#48	019-010	#62	019-016	#78	019-022
				#80	019-023

N424-22-XXX

Applications: PE Series - PE34, 36, 38mm, **Honda** ATC250R (81-82) **Kawasaki** V-Twin CVK - VN700A Vulcan 700, VN750A Vulcan 750 (86-06), VN1500 Vulcan 1500 (87-99)

Size	Order No.	Size	Order No.	Size	Order No.
#35	019-030	#52	019-037	#70	019-044
#38	019-031	#55	019-038	#72	019-045
#40	019-032	#58	019-039	#75	019-046
#42	019-033	#60	019-040	#78	019-047
#45	019-034	#62	019-041	#80	019-048
#48	019-035	#65	019-042		
#50	019-036	#68	019-043		

N424-24-XXX

Applications: CR Special (CRS) 26 - 33mm & 35 - 39mm Carburetors, **Honda** 99103-358-000, CR125R (79-80), CR250M (1976), CR250R (78-80), FL250 Odyssey (77-84)

Size	Order No.	Size	Order No.	Size	Order No.
#35	019-060	#52	019-067	#70	019-074
#38	019-061	#55	019-068	#72	019-075
#40	019-062	#58	019-069	#75	019-076
#42	019-063	#60	019-070	#78	019-077
#45	019-064	#62	019-071	#80	019-078
#48	019-065	#65	019-072	#82	019-079
#50	019-066	#68	019-073		

N424-33-XXX

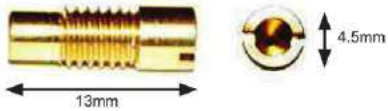

Applications: OEM FCR-MX Carburetors, Honda CRF250/450R, CRF250/450X, TRX450ER/R (06-08), **Husqvarna** SM610, **Kawasaki** KX250F, KX450F, KLX450R, **Polaris** Outlaw 525 (07-08), **Suzuki** RM-Z250, RM-Z450, **Yamaha** WR250F (2003) YZ250F (2003) YFZ450R, YZ450F (2003) WR450F (2003)

Size	Order No.	Size	Order No.
#80	019-1014	#100	019-1018
#85	019-1015	#105	019-1019
#90	019-1016	#110	019-1020
#95	019-1017	#115	019-1021

N424-25B-XXX

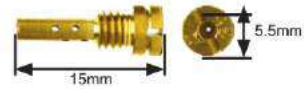

Applications: FCR Horizontal and Downdraft Series FCR28, 32, 33, 35, 37, 39, 41mm, **Arctic Cat** ATV with CVK carburetor, **HARLEY-DAVIDSON®** w/Keihin BD (Screaming Eagle) and Keihin BH (non CV type), **Kawasaki** models with CVK and FCR carburetors, **(VN700/750/1500 Vulcan with CVK see N424-22-XXX)** **Yamaha** YZF600R (95-07), **Yamaha** Snowmobile with Keihin BD carburetor.

Size	Order No.	Size	Order No.	Size	Order No.
#35	019-810	#58	019-819	#80	019-828
#38	019-811	#60	019-820	#82	019-829
#40	019-812	#62	019-821	#85	019-830
#42	019-813	#65	019-822	#88	019-831
#45	019-814	#68	019-823	#90	019-832
#48	019-815	#70	019-824	#92	019-833
#50	019-816	#72	019-825	#95	019-834
#52	019-817	#75	019-826	#98	019-835
#55	019-818	#78	019-827		

N424-26-XXX

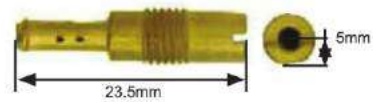

Applications: Some **Honda** VB Series using 99101-MA4 jets, **Honda** 99103-G46-000, 99103-MA4-000, XR400, CBX, Honda XR650L **Honda ATV** ATC250ES. ATC250SX, TRX250 (1985), .

Size	Order No.	Size	Order No.	Size	Order No.
#35	019-540	#52	019-547	#70	019-554
#38	019-541	#55	019-548	#72	019-555
#40	019-542	#58	019-549	#75	019-556
#42	019-543	#60	019-550	#78	019-557
#45	019-544	#62	019-551	#80	019-558
#48	019-545	#65	019-552		
#50	019-546	#68	019-553		

N424-32-XXX

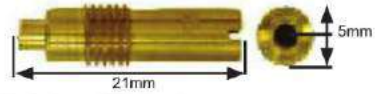

Applications: Keihin PE Series - PE24 only.

Size	Order No.	Size	Order No.	Size	Order No.
#35	019-080	#48	019-085	#60	019-090
#38	019-081	#50	019-086	#62	019-091
#40	019-082	#52	019-087	#65	019-092
#42	019-083	#55	019-088	#68	019-093
#45	019-084	#58	019-089	#70	019-094

N424-03-XXX

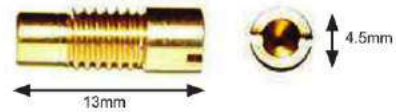

Applications: Kawasaki KZ750 (1980)

Size	Order No.	Size	Order No.
#32A	019-1030	#38B	019-1035
#35A	019-1032	#40A	019-1036
#38A	019-1034	#50B	019-1037

Zip-Ty Air Mixture Screw

Zip-Ty Air Mixture Screws allow you to handily adjust your 2-stroke's off idle acceleration with just a turn off your fingers-no tools. The Air mixture Screw will fit all Keihin 2-stroke carburetors. It's lightweight billet aluminum, hand anodized for long lasting service, and laser etching for adjustment accuracy.

N424-35-XXX

Nickel plated slow jets to prevent corrosion.
Applications: CDK, CDKII 38 & 42 Watercraft Carburetors, **Kawasaki** OEM Jet-Ski with CDK carburetors.

Size	Order No.	Size	Order No.	Size	Order No.
#50	019-630	#75	019-640	#100	019-650
#52	019-631	#78	019-641	#102	019-651
#55	019-632	#80	019-642	#105	019-652
#58	019-633	#82	019-643	#108	019-653
#60	019-634	#85	019-644	#110	019-654
#62	019-635	#88	019-645	#112	019-655
#65	019-636	#90	019-646	#115	019-656
#68	019-637	#92	019-647	#118	019-657
#70	019-638	#95	019-648	#120	019-658
#72	019-639	#98	019-649		

N424-74C-XXX

Applications: Arctic Cat 650 V-Twin ATV, **Honda** Ruckus, **Kawasaki** KLX110, V-Twin ATV with CVKR-D, KSV700A/B KFX, KVF750, **Suzuki** DR-Z110, V-Twin ATV with CVKR-D, LTF700 Twin Peaks, **KTM** 950 Adventurer, **Yamaha** YZF-R6 (99-02).

Size	Order No.	Size	Order No.	Size	Order No.
#35	019-840	#48	019-845	#60	019-850
#38	019-841	#50	019-846	#62	019-851
#40	019-842	#52	019-847	#65	019-852
#42	019-843	#55	019-848	#68	019-853
#45	019-844	#58	019-849	#70	019-854

FCR Slow Air Jet 99101-124-XXX (99101-ZF5-XXX)

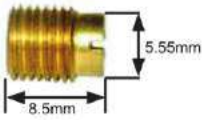

Applications: Keihin FCR Horizontal and Downdraft Series carburetors, FCR28, 32, 33, 35, 37, 39, 41mm.
Honda Metropolitan, Ruckus, **Kawasaki** CVK carbs, OEM Primary Main Jet, KZ250 LTD & CSR (80-83), KZ305A/B CSR (81-82), KZ305B CSR Belt (87-88), KZ440A/B/D/G (80-83), KZ750E (80-82), KZ750H LTD (80-83), KZ750N Spectre (82-83).

Size	Order No.	Size	Order No.	Size	Order No.
#48	019-402	#80	019-415	#112	019-428
#50	019-403	#82	019-416	#115	019-429
#52	019-404	#85	019-417	#118	019-430
#55	019-405	#88	019-418	#120	019-431
#58	019-406	#90	019-419	#122	019-432
#60	019-407	#92	019-420	#125	019-433
#62	019-408	#95	019-421	#128	019-434
#65	019-409	#98	019-422	#130	019-435
#68	019-410	#100	019-423	#135	019-437
#70	019-411	#102	019-424	#140	019-439
#72	019-412	#105	019-425	#145	019-441
#75	019-413	#108	019-426	#150	019-443
#78	019-414	#110	019-427		

CR Special Starter Jets (1001-108-XXX)

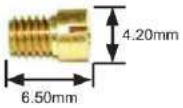

The starter jet adjusts the richness of the starter valve by metering the amount of fuel entering the float bowl.
Applications: CR Special (CRS) 26 - 33mm & 35 - 39mm Carburetors.

Size	Order No.	Size	Order No.	Size	Order No.
#35	019-370	#50	019-373	#65	019-376
#40	019-371	#60	019-375	#70	019-377
#45	019-372				

N424-52-XXX OEM FCR-MX Leak Jet

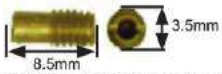

Applications: Power jet for OEM PWK carburetor, **Kawasaki** (Power Jet) 4-stroke KX250F (03-10), KX450F (06-08), KLX450R Offroad (08-09), KX series PWK, **Suzuki** RM-Z250 (03-08), RM-Z450 (05-07), **Yamaha** WR/YZ250F (01-08), WR/YZ450 (06-08), YFZ450 ATV (04-07)
These jets are used on OEM FCR-MX carburetors only.

Size	Order No.	Size	Order No.	Size	Order No.
#35	019-750	#72	019-765	#108	019-779
#38	019-751	#75	019-766	#110	019-780
#40	019-752	#78	019-767	#112	019-781
#42	019-753	#80	019-768	#115	019-782
#45	019-754	#82	019-769	#118	019-783
#48	019-755	#85	019-770	#120	019-784
#50	019-756	#88	019-771	#122	019-785
#52	019-757	#90	019-772	#125	019-786
#55	019-758	#92	019-773	#128	019-787
#58	019-759	#95	019-774	#130	019-788
#60	019-760	#98	019-775	#132	019-789
#62	019-761	#100	019-776	#135	019-790
#65	019-762	#102	019-777	#138	019-791
#68	019-763	#105	019-778	#140	019-792
#70	019-764				

FCR Slow Air Screw Set Conversion

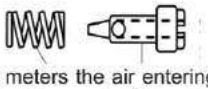

The Slow Air Jet conversion set meters the air entering the slow speed circuit. Replaces the Slow Air Jet with an adjustable air screw. Turning in riches mixture, turning out leans mixture. Parts sold individually(each).

Applications: All Keihin FCR Horizontal and Downdraft Series carburetors, FCR28, 32, 33, 35, 37, 39, 41mm, **Kawasaki** KLX400R Offroad (2003), ZX750 ZX-7RR with Keihin FVKD (96-97), **Suzuki** DR-Z400 with FCR, **Yamaha** WR/YZ400/426 with FCR (98-01)

Description	Keihin No.	Order No.
Air Screw	1014-817-2000	021-230
Coil Spring for Air Screw	16052-KM4-0040	021-235

Slow Air Jet Size	Slow Air Screw Set Adjustment (turn out)	Slow Air Jet Size	Slow Air Screw Set Adjustment (turn out)
#45	1/4 turn out	#120	1-1/4
#55	3/8	#125	1-1/2
#65	1/2	#130	1-3/4
#75	5/8	#135	2
#85	3/4	#140	2-1/4
#95	7/8	#145	2-1/2
#100	1	#150	2-3/4
#110	1-1/8	#155	3

KEIHIN Main Jets

Keihin Dealer Main Jet Kits

Genuine OEM 99101-393-XXX Round Main Jets.
Made in Japan.

Keihin Dealer Main Jet Kit, sizes #60 - #105.

Order No. 019-995

Kit Includes qt 4 of the following main jet sizes:
#60, #62, #65, #68, #70, #72, #75, #78, #80, #82, #85, #88, #90, #92, #95, #98, #100, #102, #105.
Total jets: 76 with storage box.

Keihin Dealer Main Jet Kit, sizes #108 - #152.

Order No. 019-996

Kit Includes qt 4 of the following Main Jet sizes:
#108, #110, #112, #115, #118, #120, #122, #125, #128, #130, #132, #135, #138, #140, #142, #145, #148, #150, #152. Total jets: 76 with storage box.

Keihin Dealer Main Jet Kit, sizes #155 - #200.

Order No. 019-997

Kit Includes qt 4 of the following Main Jet sizes:
#155, #158, #160, #162, #165, #170, #172, #175, #178, #180, #182, #185, #188, #190, #192, #195, #198, #200.
Total jets: 72 with storage box.

Keihin Dealer Jet Kit (Slow & Main Jets)

Genuine OEM 99107-357-XXX Main Jets and N424-21-XXX Slow Jets.
Made in Japan.

Keihin Dealer Jet Kit, sizes #120 - #180 Main Jets and sizes #40 - #65 Pilot Jets.

Order No. 019-999

Kit Includes qt 2 of the following jet sizes:
Main Jets: #120, #122, #125, #128, #130, #132, #135, #150, #152, #155, #158, #160, #162, #165, #168, #170, #172, #175, #178, #180.
Pilot Jets: #40, #42, #45, #48, #50, #52, #55, #58, #60, #62, #65. Total jets: 62 with storage box.

99101-393-XXX/99101-GHB-000

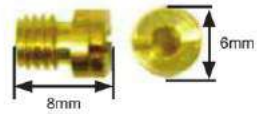

Applications: Starter Jet for **Keihin** FCR-MX, Main Air Jet for FCR's. **Honda** VB, VD, VE series carburetors, XR75 (74-75), XR650L Dual Sport, CB750 Nighthawk (91-04), CB750A (76-78), CB750C (80-82), CB750F Super Sport (79-82), CB750K (69-75), CB750K (77-82), CB750 SC Nighthawk, VFR750F Interceptor (1986), VFR750R (90-95), CBX1047cc (79-82), GL1100/A/I Goldwing (80-83),GL1500 Valkyrie, **Kawasaki** ATV, Street and Offroad models with CVK, ATV's with CVKR-D (V-Twin ATV), **Suzuki** ATV with CVK, Twin Peaks 700 with CVKR-D (V-Twin ATV).

Size	Order No.	Size	Order No.	Size	Order No.
#60	019-710	#108	019-181	#155	019-200
#62	019-711	#110	019-182	#158	019-201
#65	019-712	#112	019-183	#160	019-202
#68	019-713	#115	019-184	#162	019-203
#70	019-714	#118	019-185	#165	019-204
#72	019-715	#120	019-186	#168	019-205
#75	019-716	#122	019-187	#170	019-206
#78	019-717	#125	019-188	#172	019-207
#80	019-718	#128	019-189	#175	019-208
#82	019-719	#130	019-190	#178	019-209
#85	019-720	#132	019-191	#180	019-210
#88	019-721	#135	019-192	#182	019-211
#90	019-174	#138	019-193	#185	019-212
#92	019-175	#140	019-194	#188	019-213
#95	019-176	#142	019-195	#190	019-214
#98	019-177	#145	019-196	#192	019-215
#100	019-178	#148	019-197	#195	019-216
#102	019-179	#150	019-198	#198	019-217
#105	019-180	#152	019-199	#200	019-218

99101-357-XXX

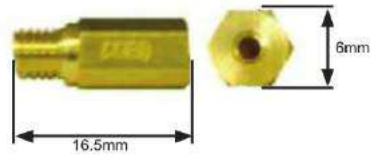

Applications: CR Special, all FCR's, FCR-MX, PE, PJ, PWK, PWM.

Size	Order No.	Size	Order No.	Size	Order No.
#80	019-101	#125	019-119	#170	019-135
#82	019-102	#128	019-120	#172	019-152
#85	019-103	#130	019-121	#175	019-136
#88	019-104	#132	019-122	#178	019-153
#90	019-105	#135	019-123	#180	019-137
#92	019-106	#138	019-124	#182	019-154
#95	019-107	#140	019-125	#185	019-138
#98	019-108	#142	019-126	#188	019-155
#100	019-109	#145	019-127	#190	019-139
#102	019-110	#148	019-128	#195	019-141
#105	019-111	#150	019-129	#200	019-143
#108	019-112	#152	019-130	#205	019-145
#110	019-113	#155	019-131	#210	019-147
#112	019-114	#158	019-132	#215	019-149
#115	019-115	#160	019-133	#220	019-702
#118	019-116	#162	019-150	#230	019-704
#120	019-117	#165	019-134		
#122	019-118	#168	019-151		

Main Air Jet N424-14-XXX

The Main Air Jet meters the air entering the needle jet holder.
Use smaller number to richen.
Applications: Keihin CR Special (CRS) Carburetors.

Size	Order No.	Size	Order No.	Size	Order No.
#80	019-301	#140	019-309	#200	019-315
#90	019-303	#150	019-310	#210	019-316
#95	019-304	#160	019-311	#220	019-317
#100	019-305	#170	019-312	#230	019-318
#110	019-306	#180	019-313	#240	019-319
#120	019-307	#190	019-314	#250	019-320
#130	019-308				

99101-116-XXX

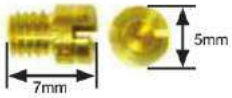

Applications: Keihin PB16, PB18 (small ATV), PC18, PC20, **Honda** ATC70 (78-85), TRX70, TRX90, XR75 (1976), **Kawasaki** KLX110, **Suzuki** DR-Z110, Main Air Jet for **KTM** 950 Adventurer.

Size	Order No.	Size	Order No.	Size	Order No.
#50	019-855	#72	019-864	#95	019-873
#52	019-856	#75	019-865	#98	019-874
#55	019-857	#78	019-866	#100	019-875
#58	019-858	#80	019-867	#105	019-876
#60	019-859	#82	019-868	#110	019-877
#62	019-860	#85	019-869	#115	019-878
#65	019-861	#88	019-870	#120	019-879
#68	019-862	#90	019-871		
#70	019-863	#92	019-872		

1001-806-XXX

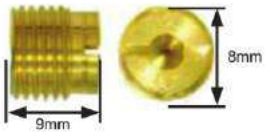

APPLICATIONS: HARLEY-DAVIDSON®
(Non CV Type) BH production butterfly carburetors.

Size	Order No.	Size	Order No.	Size	Order No.
#90	019-239	#115	019-249	#150	019-263
#92	019-240	#118	019-250	#155	019-265
#95	019-241	#120	019-251	#160	019-267
#98	019-242	#125	019-253	#162	019-268
#100	019-243	#130	019-255	#165	019-269
#102	019-244	#135	019-257	#170	019-271
#105	019-245	#138	019-258	#175	019-273
#108	019-246	#140	019-259	#180	019-275
#110	019-247	#142	019-260	#185	019-277
#112	019-248	#145	019-261		

N424-27-XXX

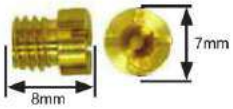

N424-36-XXX Main Jets

Nickel plated main jets to prevent corrosion.
Applications: Keihin CDK, CDKII 38 & 42 Watercraft Carburetors.
OEM **Kawasaki** Jet-Ski with CDK carburetors.

Size	Order No.	Size	Order No.	Size	Order No.
#100	019-580	#132	019-593	#165	019-606
#102	019-581	#135	019-594	#168	019-607
#105	019-582	#138	019-595	#170	019-608
#108	019-583	#140	019-596	#172	019-609
#110	019-584	#142	019-597	#175	019-610
#112	019-585	#145	019-598	#180	019-612
#115	019-586	#148	019-599	#185	019-614
#118	019-587	#150	019-600	#190	019-615
#120	019-588	#152	019-601	#195	019-616
#122	019-589	#155	019-602	#200	019-617
#125	019-590	#158	019-603		
#128	019-591	#160	019-604		
#130	019-592	#162	019-605		

Honda Primary Type Main Jet 99201-601-XXX (Non-Keihin production)

Applications: Early model **Honda** CV carb: CB/CL/SL350K, GL1000.

Size	Order No.	Size	Order No.	Size	Order No.
#60	026-010	#70	026-014	#88	026-018
#62	026-011	#72	026-015	#90	026-019
#65	026-012	#75	026-016	#92	026-020
#68	026-013	#82	026-017		

Honda Secondary Type Main Jet 99202-601-XXX (Non-Keihin production)

Applications: Early model **Honda** CV carb: CB/CL350K, CB350/400F, CB500, CB550, GL1000, **Kawasaki** KZ400D/S, **Yamaha** TX500/XS500.

Size	Order No.	Size	Order No.	Size	Order No.
#68	026-043	#98	026-051	#125	026-057
#70	026-044	#100	026-052	#130	026-058
#72	026-045	#105	026-053	#135	026-059
#75	026-046	#110	026-054	#140	026-060
#78	026-047	#115	026-055	#150	026-062
#80	026-048	#120	026-056		

APPLICATIONS: HARLEY-DAVIDSON® CVH (CV Type) carburetor.

Size	Order No.	Size	Order No.	Size	Order No.
#150	019-562	#175	019-567	#200	019-572
#155	019-563	#180	019-568	#205	019-573
#160	019-564	#185	019-569	#210	019-574
#165	019-565	#190	019-570	#220	019-576
#170	019-566	#195	019-571		

Sudco KEIHIN Street Carb Kits

Ducati FCR Dual Kits

Kits include pre-jetted Keihin FCR carb, K&N Air Filter (for stock air box), throttle, throttle cables and all necessary adapters.

Model	Year	Description	Order No.
750SS/900SS Dual	91-02	Keihin FCR-39 Kit	016-720
750SS/900SS Dual	91-02	Keihin FCR-41 Kit	016-721
M900 Monster Dual	Keihin	FCR-39 Kit	016-722
M900 Monster Dual	Keihin	FCR-41 Kit	016-723

HARLEY-DAVIDSON® KEIHIN KITS

Kits include pre-jetted Keihin FCR carb, air cleaner adapter and mounting hardware.

Model	Year	Description	Order No.
Big Twin	90-04	FCR-41 without Air Cleaner	016-756
Big Twin	90-04	FCR-41 with Air Cleaner 80 cubic	016-755
XL883 Sporster	90-04	FCR-39	016-753
XL1200 Sporster	90-04	FCR-39	016-753

Ducati FCR Split Single Kits

Kit includes pre-jetted Keihin FCR carb, throttle, cables, and velocity stacks. **Note-** 900SS/900M Split kits are available with two downdraft carburetor or one horizontal and one downdraft carburetor depending on manifold configuration. Aftermarket manifolds required for Split kits.

Model	Description	Order No.
M900 Monster, 900SS Split Single Two Downdraft 39mm	Keihin FCR-39 Kit	016-746
M900 Monster, 900SS Split Single 1 DD and 1 H 39mm	Keihin FCR-39 Kit	016-746A
M900 Monster, 900SS Split Single Two downdraft 41mm	Keihin FCR-41 Kit	016-747
M900 Monster, 900SS Split Single 1 DD and 1 H 41mm	Keihin FCR-41 Kit	016-747A

Kawasaki EX250 Ninja

Kit includes pre-jetted Keihin CR31 Special dual carburetors, air box adapters, and intake adapters. **Note:** Specify year when ordering.

Model	Year	Description	Order No.
Kawasaki EX250 Ninja R		Keihin CR31 Kit	016-3205

Moto-Guzzi 1100 Kit

Kit includes pre-jetted Keihin FCR41 carb, velocity stacks, throttle and throttle cables. **Note: Does not utilize stock airbox.**

Model	Year	Description	Order No.
1100 Sport Carb Kit	94-96	Keihin FCR41 Kit	016-744

Sudco KEIHIN Street Carb Kits

Norton Commando Kit

Kit includes pre-jetted Keihin FCR35 carb, 2 K&N Filters, throttle and throttle cables. **Requires Amal Mk II Conversion Manifolds.**

Model	Description	Order No.
Commando 750/850	Keihin FCR35 Kit	016-860

Triumph Bonneville CR Kit

Kit includes pre-jetted Keihin CR35 Special dual carburetors, velocity stacks, and intake adapters.
Note: Will fit stock air box if snorkel is removed.

Model	Year	Description	Order No.
Triumph Bonneville	01 on	Keihin CR35 Kit	016-3600

Suzuki SV650 Kits

Kit includes pre-jetted Keihin FCR carb, velocity stacks and throttle cables.

Model	Year	Description	Order No.
SV650/S	99-02	Keihin FCR39 Kit	016-762
SV650/S	99-02	Keihin FCR41 Kit	016-763

Yamaha TDM/TRX850 Kit

Kit includes pre-jetted Keihin FCR carb, velocity stacks and throttle cables. **Use with Stock airbox.**

Model	Year	Description	Order No.
TDM850 Dual	all	Keihin FCR41 Kit	016-735

Triumph Bonneville FCR Kit

Kit includes pre-jetted Keihin FCR39 carb with TPS, K&N RC-2890, RC-2900 Air Filters and air cleaner adapters.

Model	Year	Description	Order No.
Bonneville/Thruxton	01 on	Keihin FCR39 Kit	016-877

Sudco Mikuni Street Carb Kits

HARLEY-DAVIDSON® KITS

Kits include pre-jetted Mikuni VM carburetor, throttle cable, K&N Air Filter, Sudco/Mikuni Tuning Manual, manifolds, additional jets for fine tuning and all necessary adapters.

Model	Description		Order No.
Sportster**/Shovelhead	Mikuni VM38	HDS-101/38mm	001-200
Sportster**/Shovelhead	Mikuni VM44	HDS-101B/44mm	001-202
Knucklehead/Panhead	Mikuni VM38	HDS-102/38mm	001-201
Knucklehead/Panhead	Mikuni VM44	HDS-102B/44mm	001-205

**Sportster 1984 and earlier models only

Kawasaki H2-750 Kits

Kits include pre-jetted Mikuni TM Flat Slide carburetors, K&N RC-1250 Air Filters and rubber mounting flanges.

Description	Year	Order No.
Mikuni TM32 Kit	1972-1975	001-239
Mikuni TM34 Kit	1972-1975	001-241

Honda CB/CL350 Kit

Kits include pre-jetted Mikuni VM Round Slide carburetors, K&N RC-1250 Air Filters and 2 into 1 throttle cable.

Description	Year	Order No.
Mikuni VM30 Kit	1968-1973	001-247

Norton Commando 750/850 Kits

Kits include Mikuni VM pre-jetted carb, rubber flanges, manifolds, spare jets and Sudco/Mikuni Tuning Manual.

Cables not included with kits. Order separately.

Note: VM Roundslide carburetors may be upgraded to TM Flat Slide carburetors on many applications. Ask your Sudco sales rep. for details.

Description	Order No.
Mikuni VM32 Dual Kit	001-250
Mikuni VM34 Dual Kit	001-251
Mikuni VM34 Single Kit	001-252
Mikuni VM36 Single Kit	001-253
Mikuni VM38 Single Kit	001-254
Throttle Cable for VM34 Single Carb Kit	007-575
Throttle Cable for VM36, VM38 Single Carb Kit	007-576
Throttle Cable for VM32, VM34 Dual Carb Kits	002-025
(Some soldering required for 002-025)	

Royal Enfield 500 Kits

Kits include Mikuni VM pre-jetted carb, rubber flange, manifold spacer plate, mounting bolts, throttle cable, K&N RU-0600 Air Filter, fuel lines and a Sudco/Mikuni Tuning Manual.

Description	Year	Order No.
Mikuni VM30 Kit	00 on	001-265
Mikuni VM32 Kit	00 on	001-266
Mikuni VM34 Kit	00 on	001-237

Norton Atlas Kit

Kit includes Mikuni VM pre-jetted carb, rubber flange, manifold, spare jets and Sudco/Mikuni Tuning Manual.

Description	Order No.
VM34 Single Kit	001-233
Throttle Cable for VM34 Single Carb Kit	007-575
Air Filter will not fit. Cables not included with kit. Order separately.	

Triumph Bonneville VM Kits

Kits include Mikuni VM pre-jetted carb, rubber flanges when applicable, manifolds, air filters, spare jets and Sudco/Mikuni Tuning Manual.

Description	Year	Order No.
Mikuni VM30 Kit	1964-mid 1968	001-278
Mikuni VM32 Kit	1964-mid 1968	001-279
Mikuni VM34 Kit	1964-mid 1968	001-280
Mikuni VM30 Kit	1969-mid 1972	001-275
Mikuni VM32 Kit	1969-mid 1972	001-276
Mikuni VM34 Kit	1969-mid 1972	001-277
Mikuni VM30 Kit	1973-1978	001-290
Mikuni VM32 Kit	1973-1978	001-291
Mikuni VM34 Kit	1973-1978	001-292
Throttle Cable only for VM30-34 Kits		005-578

Throttle Cable part number 007-578 requires 2 for junction box.

Triumph TR6/TR7 Single Kits

Kits include Mikuni VM pre-jetted carb, rubber flange, manifold, spare jets Sudco/Mikuni Tuning Manual and air filters.

Description	Year	Order No.
Mikuni VM30 Kit	1947-1981	001-293
Mikuni VM32 Kit	1947-1981	001-294
Mikuni VM34 Kit	1947-1981	001-295
Replacement Throttle Cable only for VM Kits		007-577

Yamaha XS650 Kit

Kit includes pre-jetted Mikuni VM34 carb, rubber mounting flanges, spare jets, K&N RB-0610 Air Filter, throttle cable and Sudco/Mikuni Tuning Manual.

Note: Removal or slight modifying of side covers required.

Photo courtesy of 4TheRiders

RED LINE SYNTHETIC OIL

SI-1 Complete Fuel System Cleaner

SI-1's injector and valve detergent is a concentrated package of the most powerful high-temperature detergents available to clean gasoline fuel injectors or carburetors, intake valves and combustion chambers. and can clean injectors to nearly 100% efficiency in one treatment. The cleansing effect on injector deposits can raise fuel economy
12% or even greater depending on the condition of the injectors. SI-1 also contains detergents and a synthetic upper cylinder lubricant which will help clean pollution control valves and can reduce octane requirements by two numbers. SI-1 also protects the fuel system from rust. Sold in 15 fl. oz. bottle.

Order No. 900-870

Sudco KEIHIN Offroad Carb Kits

Arctic Cat DVX 400 Kit

The 39mm FCR kit bolts right on to your stock intake manifold and airbox. A push/pull throttle assembly must be used (supplied with kit). This is a great kit for stock to mild motors for trail, wood, and mx. The 41mm FCR kit is also a bolt-on and is perfect for highly modified big bore engines to wide open desert and dune riding.

Model	Description	Order No.
DVX400 Carb Kit	Keihin FCR39	016-855
DVX400 Carb Kit	Keihin FCR41	016-856

Honda XR600R Kit

Kit includes pre-jetted FCR41 carb, adapter and push/pull throttle cables. Bolts on to your stock air box and intake manifolds. The 41mm kit is well suited to all around condition, trail riding, woods and mx with stock and modified motors.

Model	Year	Description	Order No.
XR600R Carb Kit	89-00	Keihin FCR41 Kit	016-730

Honda TRX400EX Kit

Kit includes pre-jetted Keihin FCR carb, push/pull throttle and throttle cables. Bolts on to your stock air box and intake manifolds. The 39mm kit is well suited to all around condition, trail riding, woods and MX with stock to mild motors. The 41mm carb is best with big, highly modified engines and used such as desert racing, dunning, and sand drags.

Model	Year	Description	Order No.
TRX400EX Carb Kit	99 on	Keihin FCR39 Kit	016-759
TRX400EX Carb Kit	99 on	Keihin FCR41 Kit	016-761

Honda XR650R Kit

Kit includes pre-jetted Keihin FCR carb, push/pull throttle and throttle cables. Bolts on to your stock air box and intake manifolds. The 41mm kit is well suited to all around condition, trail riding, woods and MX with stock and modified motors.

Model	Year	Description	Order No.
XR650R Carb Kit (no air filter)	00-07	Keihin FCR41 Kit	016-765

See page 159 for Mikuni TM kit.

Honda XR650L Kit

Kit includes pre-jetted Keihin FCR41 carb, push/pull throttle and throttle cables. Bolts on to your stock air box and intake manifolds. The 41mm kit is well suited to all around condition, trail riding, woods and stock and modified motors.

Model	Year	Description	Order No.
XR650L w/o Choke	93-07	Keihin FCR41	016-749
XR650L w/Choke	93-07	Keihin FCR41	016-749A

Husaberg FE501 Kit

Kit includes pre-jetted Keihin FCR41 carb with choke. Bolts on to your stock intake manifold and airbox.

Model	Description	Order No.
FE501 Carb Kit	Keihin FCR41	016-872

Sudco KEIHIN Offroad Carb Kits

Husaberg FS650 Kit

Kit includes pre-jetted Keihin FCR41 carb with choke.
Bolts on to your stock intake manifold and airbox.

Model	Description	Order No.
FS650 Carb Kit with choke	Keihin FCR41	016-873

Kawasaki KFX400 Kit

This 39mm FCR kit bolts right on to your stock intake manifold and airbox. A push/pull throttle assembly must be used (supplied with kit). This is a great kit for stock to mild motors for trail, wood, and MX. The 41mm FCR kit is also a bolt-on and is perfect for highly modified big bore engines for wide open desert and dune riding.

Model	Description	Order No.
KFX400 Carb Kit	Keihin FCR39	016-855
KFX400 Carb Kit	Keihin FCR41	016-856

Kawasaki KLX400 Kit

The 39mm FCR KLX400 kit bolts right on to your stock intake manifold and airbox. A push/pull throttle assembly must be used (supplied with kit). This is a great kit for stock to mild motors for trail, wood, and MX.

Model	Year	Description	Order No.
KLX400 Carb Kit	2003	Keihin FCR39	016-863
KLX400 Carb Kit with choke	2003	Keihin FCR39	016-864

Kawasaki KLX650 Kit

Kit includes pre-jetted Keihin FCR41 carb. Use the stock throttle and choke cables. Bolts on to your stock intake manifold and air box.

Model	Year	Description	Order No.
KLX650 Carb Kit	93-96	Keihin FCR41	016-868

KTM400 RXC & LC4 Kit

Kit includes pre-jetted Keihin FCR39 carb and push/pull throttle cables. Kit **016-740** uses stock throttle housing. A Motion Pro push/pull throttle is supplied with kit **016-740A**. Bolts on to your stock air box and intake manifolds.

Model	Description	Order No.
KTM400 RXC & LC4 Carb Kit	Keihin FCR39	016-740
Use with stock throttle housing	(to mid 2000 only)	
KTM400 RXC & LC4 Carb Kit	Keihin FCR39	016-740A
Includes a Motion Pro Throttle	(to mid 2000-2006)	

KTM950 Adventurer Kit

Kits include pre-jetted Keihin FCR carb, adapters, push/pull throttle cables. Bolts on to your stock intake manifolds.

Model	Year	Description	Order No.
KTM950 Carb Kit	03-07	Keihin FCR39	016-875
KTM950 Carb Kit	03-07	Keihin FCR41	016-876

Sudco KEIHIN Offroad Carb Kits

KTM620/640 Kit

Kit includes pre-jetted Keihin FCR39 carb and push/pull throttle cables. Bolt-on kits that run the way KTM engineers intended. Easier starting and smooth glitch free POWER.

Model	Description	Order No.
KTM620/640 Carb Kit	Keihin FCR41 (1994 to mid 2000 only)	016-739
KTM620/640 Carb Kit	Keihin FCR41 (mid 2000-present)	016-739A

Suzuki LT-Z400 Kit

The 39mm FCR LTZ400 kit bolts right on to your stock intake manifold and airbox. A push/pull throttle assembly must be used (supplied with kit). This is a great kit for stock to mild motors for trail, wood, and MX. The 41mm FCR kit is also a bolt-on and is perfect for highly modified big bore engines for wide open desert and dune riding.

Model	Description	Order No.
LT-Z400 Carb Kit	Keihin FCR39	016-855
LT-Z400 Carb Kit	Keihin FCR41	016-856

Yamaha YXR660 Rhino Kit

Kit includes FCR41 pre-jetted carburetor and throttle cable. The FCR41 kit for the Rhino 660 works well with stock or slightly modified motor. Improved throttle response and acceleration through the entire power band.

Model	Description	Order No.
YXR660 Carb Kit	FCR41	016-866

See page 159 for Mikuni HSR kit.

Suzuki DR-Z400

The 39mm FCR kit bolts right on to your stock intake manifold and airbox. A push/ pull throttle assembly must be used (supplied with kit). This is a great kit for stock to mild motors for trail, wood, and MX.
Will fit 2000-2007 DRZ400S Y, K1-K6, 2004-2006 DRZ400E K4-K6 (Calif. Models only), 2005-2006 DRZ400SM K5-K6.
Also fits Kawasaki KLX400 Dual Sport (2003).

Model	Description	Order No.
DR-Z400 Carb Kit	Keihin FCR39	016-863
DR-Z400 Carb Kit with choke	Keihin FCR39	016-864

Yamaha YFM660 Raptor Kit

Simple bolt-on horsepower. FCR35mm for stock to mild engines, and FCR39 for modified engines. Everything is included for a simple installation. Stock and some aftermarket exhaust may interfere with the accelerator pump chamber. This kit retains your stock airbox.

Model	Description	Order No.
YFM660 Raptor Carb Kit	FCR35	016-850
YMF660 Raptor Carb Kit	FCR39	016-851

Yamaha YFS200 Blaster Kit

This kit really wakes up modified Blasters. It bolt-on right onto the stock intake manifold and airbox. Not recommended for stock engines. Available for stock thumb or with a twist throttle and cable.

Model	Description	Order No.
YFS200 Carb Kit for Twist Throttle	Keihin PWK33	016-251
YFS200 Carb Kit for Thumb Throttle	Keihin PWK33	016-252

Honda XR400R Kit

Kit includes pre-jetted Mikuni TM36 pumper carb, push/pull throttle cables, and Sudco/Mikuni Tuning Manual. Everything is included to mount this carb to your bike. This kit is well suited for stock and mildly modified motors.

Model	Description	Order No.
XR400R Carb Kit	Mikuni TM36 Kit	001-240

Honda XR650R Kit

Kit includes pre-jetted Mikuni TM40 pumper carb, push/pull throttle cables, and Sudco/Mikuni Tuning Manual. Bolts on to your stock air box and intake manifolds.

Model	Description	Order No.
XR650R Carb Kit	Mikuni TM40 Kit	001-238

See page 156 for Keihin FCR kit.

Yamaha YFM350 Warrior Kit

Kit includes pre-jetted Mikuni TM36 Pumper carb, Rubber Flange, airbox adapter, push/pull throttle cable, push/pull throttle, and Sudco/Mikuni Tuning Manual.

Model	Description	Order No.
YFM350 Warrior Carb Kit	Mikuni TM36 Pumper Carb	001-297

Yamaha YXR660 Rhino Kit

Kit includes HSR45 pre-jetted carburetor, throttle cable, and Sudco/Mikuni Tuning Manual. Improved throttle response and acceleration through the entire power band.

Model	Description	Order No.
YXR660 Carb Kit	Mikuni HSR45 Kit	001-298

See page 159 for Keihin FCR kit.

MIKUNI RS Smoothbore

Mikuni RS Smoothbore Carburetors

Designed for in-line four cylinder performance motorcycles, the Mikuni RS Series Radial Flat Slide Carburetors offer superior horsepower gains with their maximum flowing smoothbore induction tract and radial flat slide design. An adjustable accelerator pump system helps to provide instant throttle response, particularly in the lower RPM range. The RS Series Carburetors feature a compact design which is 25% lighter than other performance Carburetors and uses readily available Mikuni jets. Available sizes : RS34, RS36, RS38 and RS40mm.

Features of the RS Series Carburetors

- Adjustable Pump Adjust Screws. Sets ON and OFF operation of accelerator pump in relation to throttle slide position.
- Throttle Return Spring. A choice of positioning pegs allow adjustment of spring tension.
- Idle Adjustment Screw. Controls engine idle speed.
- Adjustment Accelerator Pump. Squirts fuel into carburetor venturi when throttle is opened to improve engine response.
- Starter System. Provides fuel enrichment for cold engine starting.
- Adjustable Pump Spray Nozzle. Shoots fuel directly into the intake tract for immediate engine response.

Features of the RS Series Carburetors

- Jet Needle Clip. Easy adjustment feature for quick adjustment.
- Flat Throttle Valve Design. Provides the strongest signal for precise and instantaneous throttle response.
- Float Bowl Vent. Allows atmospheric pressure into float bowl for fuel flow.
- Smooth Throttle Bore/Venturi. Produces the optimum air and fuel mixture flow at all RPM's.
- Genuine Mikuni Jets and Tuning Components. Provides for precise fuel metering.
- Pilot Air Jet. Use in conjunction with the Pilot Fuel Screw for tuning of mixture at idle to 1/4 throttle.

Ordering RS Smoothbore Carburetors

Available in 34, 36, 38 and 40mm bore sizes with different carb spacing for particular bike applications and with different jetting to match engine modifications. Please see application chart listing on next page. **Note:** These are guidelines only. Specifications are subject to change.

Center Bell Crank

Mikuni No.	Order No.
RS34-D21	001-319
RS36-D3	001-320
RS36-D8	001-321
RS38-D19	001-325
RS38-D35	001-326
RS40-D1	001-330
RS40-D12	001-331

Left Side Bell Crank

Mikuni No.	Order No.
RS36-D9	001-322
RS38-D29	001-327
RS40-D7	001-332

IMPORTANT: Mikuni RS Carburetors are legal in California ONLY FOR RACING VEHICLES WHICH MAY NEVER BE USED UPON A PUBLIC STREET OR HIGHWAY. In other locations check for similar laws which may apply.

Standard Jetting Specifications Center Bell Crank

Mikuni No.	Application * (General)	Carb Spacing (Throttle Shaft No.) A-B-C	Spigot (O.D.) MM	Main Jet N100.604	Jet Needle (J8-) (Clip Pos.)	Needle Jet #568 (784-13002)	Pilot Jet (VM28/486)	Pilot Screw (Turns)
RS34-D21	Suz GSX600F Katana (1988)	77-93-77	40	115	9DZH01*	P-4	17.5	1/4-1/2
	Suz GSX-R750 (88-92)	(700-17011)	115	(-3)				
	Suz GS750		115					
	Kaw KZ750							
RS36-D8	Kaw ZX900A Ninja (84-86)	77-85-77	42	130	9DZH01*	P-4	17.5	1/4-1/2
	Kaw ZX1000A Ninja (86-87)	(700-17011)	130	(-3)				
	Yam FJ1100 (84-85)		130					
	Yam FJ1200 (86-92)		130					
RS36-D3	Kaw KZ1000J/K/M/R (81-83)	77-93-77	42	120	9DZH01*	P-4	17.5	1/4-1/2
	Kaw KZ1100A/D (81-85)	(700-17011)	120	(-3)				
	Suz GSX600F Katana (1988)		120					
	Suz GS1000/1100/1150		120					
	Suz GSX-R750/1100 Air Cooled		120					
RS38-D19	Kaw KZ1000J/K/M/R (81-83)	77-93-77	42	135	9CHY03*	Y-6	17.5	1/4-1/2
	Kaw KZ1100A/D (81-85)	(700-17011)	135	(-3)				
	Suz GSX600F Katana (1988)		135					
	Suz GS1000/1100/1150		135					
	Suz GSX-R750/1100 Air Cooled							
RS38-D35	Kaw ZX900A Ninja (84-86)	77-85-77	42	130	9CHY03*	Y-6	17.5	1/4-1/2
	Kaw ZX1000A Ninja (86-87)	(700-17011)	130	(-3)				
	Yam FJ1100 (84-85)		130					
	Yam FJ1200 (86-92)							
RS40-D12	Kaw ZX900A Ninja (84-86)	77-85-77	44	140	9CHY03*	Y-6	17.5	1/4-1/2
For Race	Kaw ZX1000A Ninja (86-87)	(700-17011)		140	(-2)			
use	Yam FJ1100 (84-85)			140				
on models	Yam FJ1200 (86-92)			140				
listed								
RS40-D1	Kaw KZ1000J/K/M/R (81-83)	77-93-77	44	140	9CHY03*	Y-6	17.5	1/4-1/2
For Race	Kaw KZ1100A/D (81-85)	(700-17011)		140	(-3)			
use	Suz GS1000/1100/1150			140				
on models	Suz GSX-R750/1100 Air Cooled		140					
listed								

Standard Jetting Specifications Left Bell Crank Uses left side throttle linkage.

•• RS36-D9	Kaw KZ1000J/K/M/R (81-83)	77-93-77	42	120	9DZH01*	P-4	17.5	1/4-1/2
	Kaw KZ1100A/D (81-85)	(700-17012)		120	(-3)			
	Suz GSX600F Katana (1988)			120				
	Suz GS1000/1100/1150			120				
	Suz GSX-R750/1100 Air Cooled		120					
** RS38-D29	Kaw KZ1000J/K/M/R (81-83)	77-93-77	42	135	9CHY03*	Y-6	17.5	1/4-1/2
	Kaw KZ1100A/D (81-85)	(700-17012)		135	(-3)			
	Suz GS1000/1100/1150			135				
	Suz GSX-R750/1100 Air Cooled		135					
** RS40-D7	Kaw KZ1000J/K/M/R (81-83)	77-93-77	44	140	9CHY03*	Y-6	17.5	1/4-1/2
For Race	Kaw KZ1100A/D (81-85)	(700-17012)		140	(-3)			
use	Suz GS1000/1100/1150			140				
on models	Suz GSX-R750/1100 Air Cooled		140					
listed								

RS Series Notes

Mikuni No. (Part Number) in application chart above denotes size in millimeters. RS34-D21 = RS34.

- **Uses left side throttle linkage.**
- **Applications (General) - These are guidelines only. Specifications are subject to change.**
- **RS34 and RS36 Carburetors may use Jet Needle #9DZH05.**
- **RS38 and RS40 Carburetors may use Jet Needle #9CHY10.**

Pre Kawasaki KZ1000J models require qt 4 mounting flanges. Order No. 005-866, Qt 4 set.

Carburetor Spacing (mm):

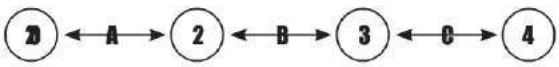

MIKUNI RS Smoothbore Exploded View

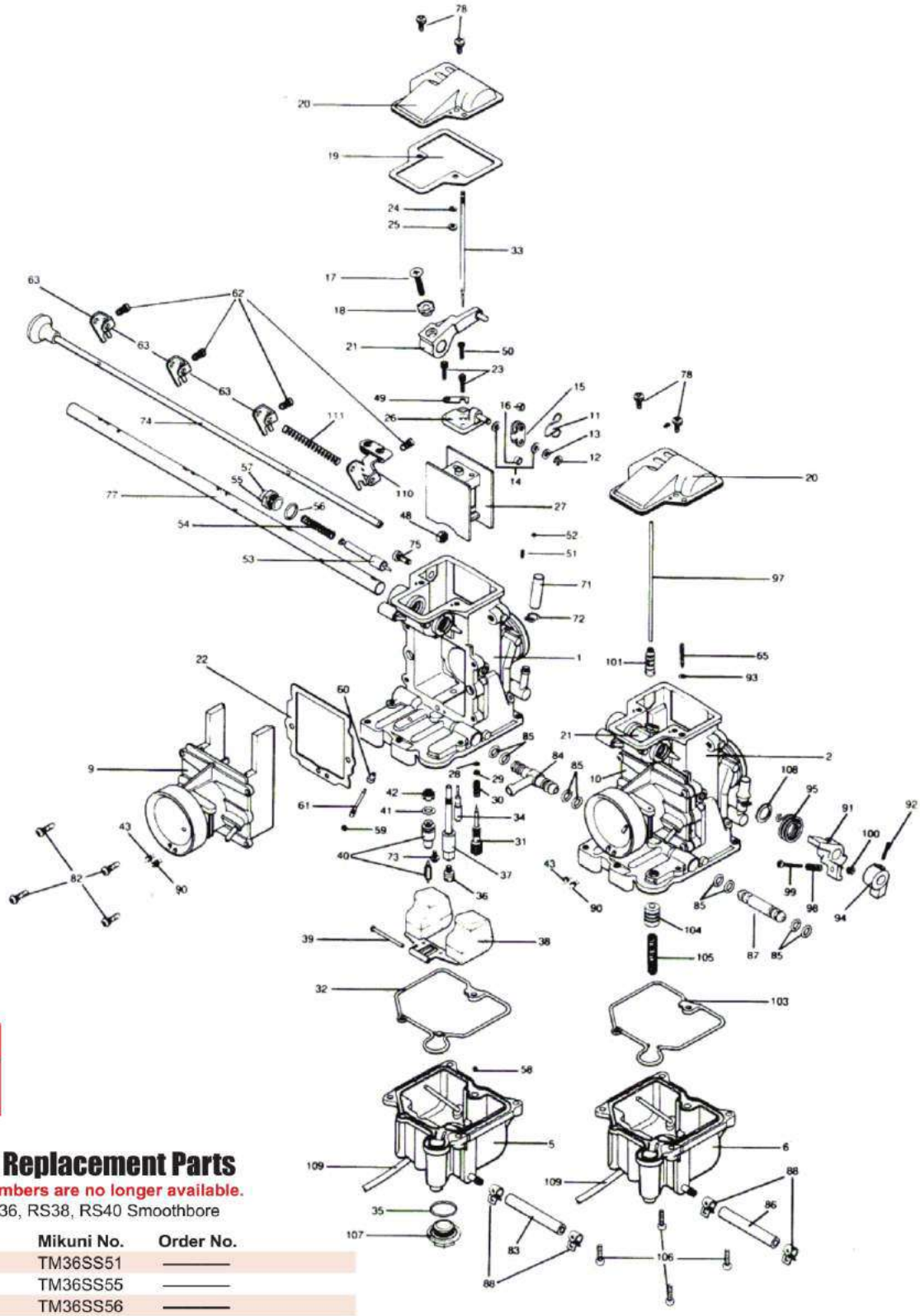

Float Height
17mm

RS Smoothbore Replacement Parts

• Lined through part numbers are no longer available.

Applications: RS34, RS36, RS38, RS40 Smoothbore

No.	Description	Mikuni No.	Order No.
1.	Mixing Body	TM36SS51	———
2.	Mixing Body	TM36SS55	———
3.	Mixing Body	TM36SS56	———
4.	Mixing Body	TM36SS57	———
5.	Float Chamber Body	TM36/69	———
6.	Float Chamber Body	TM36/71	———
7.	Float Chamber Body	TM36/73	———

Carburetors are intended for off-road riding and racing use only. Not legal for use in California or other locations where similar pollution laws may apply.

RS Smoothbore Replacement Parts

• Lined through part numbers are no longer available.

No.	Description	Mikuni No.	Order No.
8.	Float Chamber Body	TM36/75	———
9.	Air Funnel Body	TM36/27A	———
10.	Air Funnel Body	TM36/27B	———
11.	Clip, T.V. Lever	TM27/05A	———
12.	E-Ring, T.V. Lever	BSW28/70	002-355
13.	Washer, T.V. Lever	M10/56	002-632
14.	Packing, T.V. Lever	B40I/10	002-629
15.	Plate, T.V. Lever	TM27/04	———
16.	Ring, T.V. Lever	TM29/65	———
17.	Screw, Sync. Lock	C5=0518	007-117
18.	Ring, Sync. Adjust	TM36/06	007-118
19.	Gasket, Top Cover	TM36/39	007-119
20.	Top Cover, Carb	TM36/59	———
21.	Lever Ass'y., T.V. #1 & #2	TM36/51	———
22.	Gasket, A/Funnel	TM36/42	007-658
23.	Screw, 2.5mm Allen	739-13001	007-123
24A.	E-Ring, RS34, RS36 Needle	VM20/369	002-083
24B.	E-Ring, RS38, RS40 Needle	BS32/126	002-455
25A.	Washer, RS34, RS36 Needle Clip	VM26/315	007-124
25B.	Washer, RS38, RS40 Needle Clip	826-03002	007-267
26.	Connector Plate, T.V.	TM36/54	———
27A.	Throttle Valve 2.0, RS34, RS36	Mikuni only	———
27B.	Throttle Valve 2.0, RS38, RS40	Mikuni only	———
28.	O-Ring, Pilot Fuel Screw	N133.037	002-858
29.	Washer, Pilot Fuel Screw	VM12/33	002-856
30.	Spring, Pilot Fuel	N133.206	007-137
31.	Screw, Pilot Fuel	604-26003	007-138
32.	O-Ring, F.C.B. #1-3-4	616-94020	007-140
33.	Jet Needle	9 Series	Pg.164
34.	Pilot Jet	VM28/486	Pg.212
35.	O-Ring, Float Bowl Drain Plug	VM28/254	002-531
36.	Main Jet	N100.604	Pg.214
37.	Needle Jet #568 Series	784-13002	Pg.207
38.	Float Assembly	859-32011	007-141
39.	Pin, Float	VM30/160	002-605
40.	Needle Valve Assembly	N149.040	Pg.164
41.	O-Ring, Needle Valve	KV/10	002-709
42.	Filter, Needle Valve	VM18/233	002-606
43.	Main Air Jet (Plugged)	BS30/97	002-149
44.	Screw, Crank Bracket	C8=0512	———
45.	Lever Assembly, T.V. #3 Carb	TM36/57	———
46.	Screw, Lever Lock	C5=0514	007-625

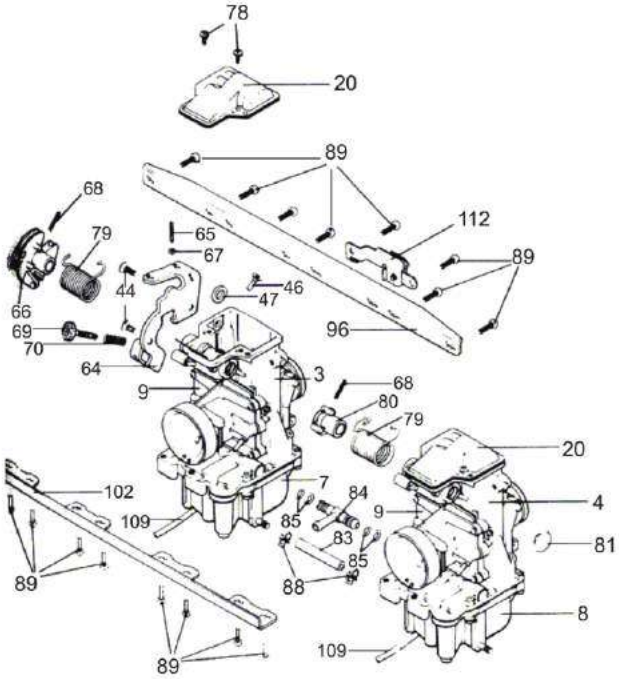

No.	Description	Mikuni No.	Order No.
47.	Packing, Shaft	VM28/174	———
48.	Hexagon, Locknut	VM18/267	———
49.	Plate, Needle Retainer	TM36/12	———
50.	Screw, T.V. Plate	C2-0310	———
51.	Spring, Starter Shaft	B21/29	007-155
52.	Ball, Starter Shaft	B21/18	007-156
53.	Plunger, Starter	N151.038	007-747
54.	Spring, Starter	VM16/42	002-671
55.	Guide Holder, Starter	640-12002	———
56.	O-Ring, Starter	N138.198	007-160
57.	Cap, Starter	N106.211	———
58.	Starter Jet	VM17/1002	Pg.213
59.	O-Ring, A/P Nozzle	N124.063	007-163
60.	Plug, A/P Nozzle	TM29/14	007-164
61.	Pump, Nozzle (STD)	TM36/43-03 (45)	007-165
		TM36-43-05 (55)	007-166
		TM36-43-08 (70)	007-167
62.	Screw, Start Bracket	N158.052	002-659
63.	Lever, Start Shaft	N178.656	———
64.	Bracket, Bell Crank	TM36/37D	———
65.	Adjuster Screw, A/P	TM36/48A	007-168
66.	Lever Assembly, Bell Crank	TM36/31	———
67.	Hexagon Nut, A/P	N2-03-B	———
68.	Pin, Bell Crank	N138.019	007-171
69.	Adjuster, Idle	739-55003	007-490
70.	Spring, Idle Adjuster	N110.209	002-655
71.	Cap, Vacuum Fitting	N148.013	002-646
72.	Spring Clip, Vacuum Fitting	BVK28/128	———
73.	Screw, Needle Valve Holder	VM13/216	007-174
74.	Shaft Assembly, Starter	TM36/34A	———
75.	Pan Head Screw	C2=0508-B	002-648
76.	Flat Head Screw	C5=0514	007-625
77A.	Shaft, Throttle B/C #3	700-17011	002-904
77B.	Shaft, Throttle B/C #1	700-17012	002-905
77C.	Shaft, Throttle B/C #3	700-17013	002-906
78.	Screw, Top Cover	CW2=0408	007-175
79.	Spring, Throttle Return	TM36/46A	007-204
80.	Lever, Throttle Return Spring	TM36/33	———
81.	Cap, Shaft End	TM33/36A	———
82.	Screw, Air Funnel	VM38/133B	002-749
83.	Hose, Fuel Connect	888-44003	007-180
84.	Inlet, Fuel "T"	791-23018	———
85.	O-Ring, Fuel Joint	616-23002	007-182
86.	Hose, A/P Fuel	888-4404	———
87.	Joint, Fuel	792-20014	007-184
87A.	Joint, Fuel	792-20013	007-183
	For RS36-D3, RS38-D19, RS40-D1		
88.	Clip, Fuel Hose	E100729-BB	———
89.	Screw, Bracket	C2=0512-B	002-628
90.	Pilot Air Jet	BS30/97-0.8	Pg.213
91.	Lever, A/Pump	TM36/17	007-292
92.	Pin, A/Pump Locate	BN38/43	007-617
93.	O-Ring, A/Pump	B30-205	007-188
94.	Lever, A/Pump	TM36/18	007-189
95.	Spring, A/Pump	TM36/45	007-190
96.	Plate, Top Bracket	TM36/35	———
97.	Rod, A/Pump	TM36/44	007-192
98.	Spring, A/Pump Adjust	M12F/46A	002-181
99.	Screw, A/Pump Adjust	MC-0316-B	007-193
100.	Hexagon Nut, A/Pump Adjust	N3=03-B	007-194
101.	Cap, A/Pump Rubber	TM36/64	007-195
102.	Plate, Lower Bracket	TM36/36	———
103.	O-Ring, F.C.B. A/Pump	616-94021	007-197
104.	Plunger, A/Pump (12mm)	TM36/60A	007-198
105.	Spring, A/Pump (12mm)	VM14SC13/89	007-200
106.	Screw, Float Bowl	C2=0412-B	007-201
107.	Plug, Float Bowl Drain	TM32/41	007-646
108.	Ring, A/Pump Spring	E204.040	———
109.	Hose	888-23026	007-608
110.	Lever, Starter Cable	TM36/63	007-205
111.	Spring, Bracket	730-06027	007-206
112.	Bracket, Cable	TM36/61	007-207

MIKUNI RS Smoothbore Parts & Accessories

Mikuni Methanol Conversion Kit

The Mikuni Methanol kit includes all necessary components, such as main jets, jet needles, needle jets, o-rings, needles valves, etc. to convert your RS38 or RS40 to methanol. Sold as a Kit.

Note: Requires experienced tuner or technician familiar with Pre-jetting for methanol usage.

Mikuni No.	Order No.
KRS-005	002-990

K&N Air Filter for RS Series

Chrome and Rubber end cap K&N filters for Mikuni RS series. Sold each.

K&N No.	Order No.
RC-0981 with Chrome End Cap	005-121
RU-0981 with Rubber End Cap	005-744

Needle Valve Assembly

No.40 in exploded view on page 162.

GENUINE Mikuni Needle Valve Assembly include needle valve and needle valve seat. Applications: RS34, RS36, RS38 & RS40

(O-Ring for Needle Valve Seat not included)

Size	Description	Mikuni No.	Order No.
(2.0)	Needle Valve & Needle Seat	N149.040	007-143
(2.5)	Needle Valve & Needle Seat	N149.040	007-144
(2.8)	Needle Valve & Needle Seat **(Std)**	N149.040	007-145
	(007-145 is Std on all RS Series)		
	O-Ring for Needle Valve Seat	KV-10	002-709
	Filter for Needle Valve Seat	VM18/233	002-606

Velocity Stacks

Velocity stacks improve the air flow into the Carburetors to increase induction efficiency and increase horsepower on racing engines where air filters are not required. Fits all Mikuni RS series Carburetors and other Carburetors with 55mm O.D. intake bells. Choose length depending on chassis clearance and desired tuning characteristics (short length-broad high RPM power; medium length-mid RPM power; long length-low RPM power); Sold set/4.

Length	Mikuni No.	Order No.
15mm	KRS-007	005-253
30mm	KRS-002	005-250
50mm	KRS-003	005-251
70mm	KRS-004	005-252

Sudco Intake Carb Holders

These carb holders are needed when mounting RS Smoothbore carburetors to early model KZ1000. (Pre 1981)
Sold set of 4. ***Made in Japan.***

Order No. 005-866

Jet Needles

No.33 in exploded view on page 164.

Applications: RS34, RS36 Smoothbore

9DZH05-50	2.50	**Leaner**	007-108
9DZH03	2.49		007-037
9DZH04	2.48	**Richer**	007-038

Applications: RS38, RS40 Smoothbore

9CHY03 **(Std)**	2.99	**Leaner**	007-020
9CHY05	2.98		007-022
9CHY06	2.97	**Richer**	007-023

005-230

Motion Pro Push/Pull Throttle Assembly

A push/pull throttle is required with the use of all Mikuni Racing Carburetors to assure the positive closing of the carburetor throttle slides against the high vacuum pressures encountered in racing engines. This push/pull throttle assembly includes a twist throttle assembly, push and pull cables with adjusters. Sold each.

Order No. 005-230

Replacement Parts for Push/Pull Throttle Assembly

Description	Order No.
Pull Throttle Cable	005-230A
Push Throttle Cable	005-230B
Throttle Only	005-230C
Throttle Tube	005-230D

Mikuni Pocket Tuner

A handy pocket-size calculator which can be used to determine required jetting changes in Mikuni Carburetors due to climate and temperature changes. The Pocket Tuner is applicable to both single and multi-carburetor applications on two-stroke and four-stroke engines. It also has a guide for determining rich or lean carburetor conditions. Sold each.

Order No. 002-430

Sudco Mikuni Carb Tool Kit

This handy little tool kit includes a multi-purpose wrench with ruler markings, screwdriver with assorted blades and sockets. Sold as a set.

Order No. 002-045

Sudco Mikuni Tuning Manual

This 92 page manual includes exploded parts views, parts listings and optional parts. Guides you through tuning and trouble shooting for the popular lines of Mikuni Carburetors. The definite reference for Mikuni Carburetors and a must for any do-it-yourself type. Sold each.

Order No. 002-999

Brass T-Fittings Sold each.

Description	Mfg. No.	Order No.
1/4" Brass Fuel T	44555K138	009-100
.17" Brass Fuel T	44555K137	009-101
5/16" Brass Fuel T		007-811
3/8" Brass Fuel T	44555K139	009-102

MIKUNI VM29 Smoothbore Exploded View

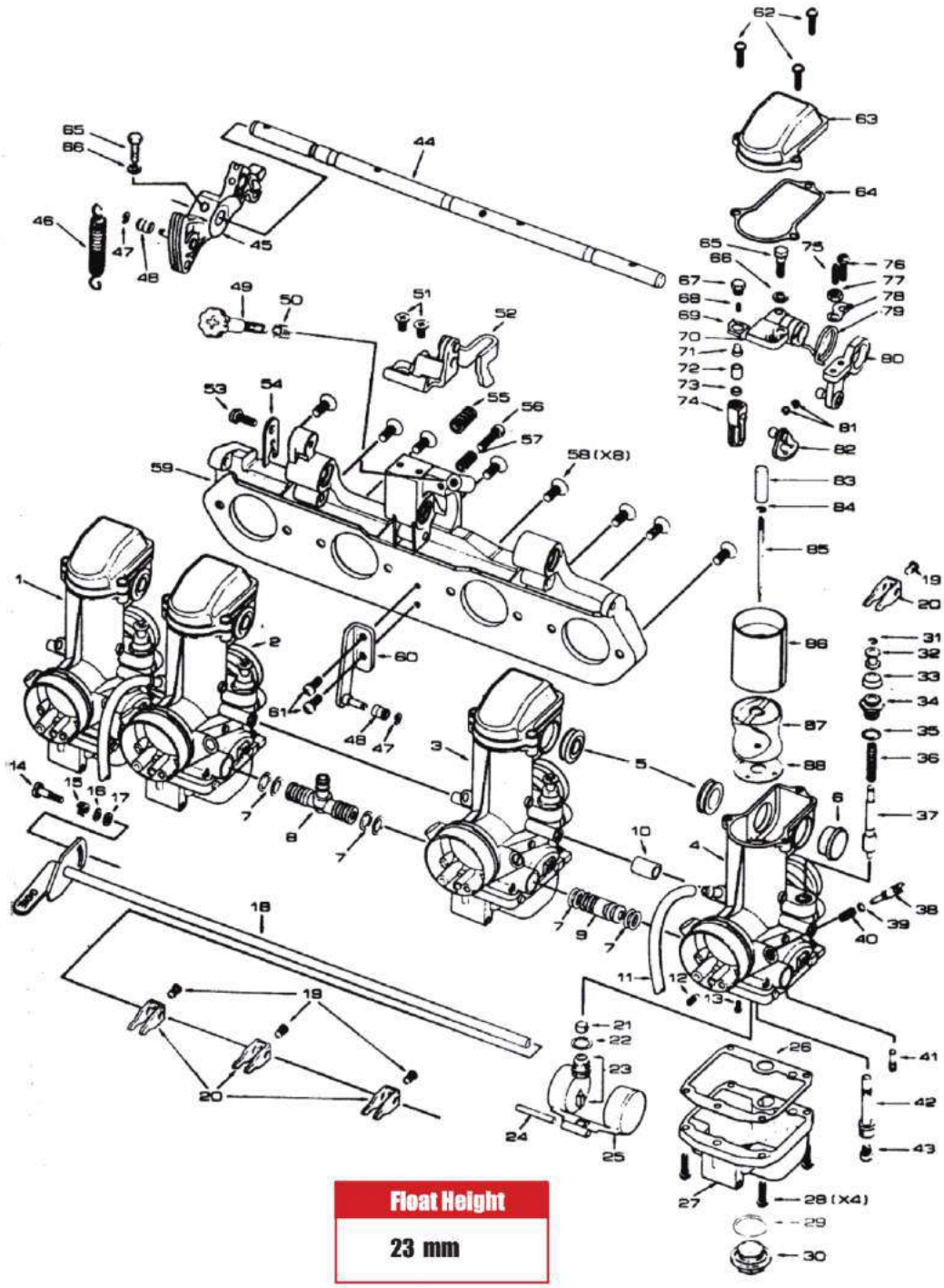

Float Height
23 mm

Standard Jetting Specifications VM29 Smoothbore

Application	Carb Model	Main Jet N100.604	Air Jet BS30/97	Pilot Jet VM22/210	Jet Needle	Needle Jet #261 Series	Float Height	Throttle Valve VM29/15
Honda CB750 (SOHC) -1978	VM29-A2	#115	.9	#17.5	#5DL31-3	0-8	23mm	1.5
Kawasaki KZ650 (77-79)	VM29-A7	#120	.9	#25	#5DL31-3	0-6	23mm	1.5
Kawasaki KZ900 (76-77)	VM29-A7	#120	.9	#25	#5DL31-3	0-6	23mm	1.5
Kawasaki KZ1000 (77-80)	VM29-A7	#120	.9	#25	#5DL31-3	0-6	23mm	1.5
Suzuki GS750 2-Valve (77-79)	VM29-A12	#115	.9	#25	#5DL31-3	0-6	23mm	2.0
Suzuki GS1000 2-Valve (78-79)	VM29-A12	#115	.9	#25	#5DL31-3	0-6	23mm	2.0

Carburetors are intended for off-road riding and racing use only. Not legal for use in California or other locations where similar pollution laws may apply.

MIKUNI VM29 Smoothbore Parts

* Please Note: The following is for parts reference only. This Mikuni carburetor is no longer in production.

VM29 Smoothbore Replacement Parts

• Lined through part numbers are no longer available.

No.	Description	Mikuni No.	Order No.
1.	Mixing Body	VM29SS1/01B	———
2.	Mixing Body	VM29SS2/01B	———
3.	Mixing Body	VM29SS3/01B	———
4.	Mixing Body	VM29SS4/01B	———
5.	Seal, Rubber	VM24/489	———
6.	End Cap, Rubber	VM28/559	———
7.	O-Ring	BV30/40	002-617
8.	Fuel Joint	VM26/268	007-748
9.	Fuel Joint	VM26/269	———
10.	Hose, Rubber	VM26-308	———
11.	Hose, Rubber Air Vent	VM15/217	———
12.	Air Jet	BS30/97	Pg.213
13.	Screw with Lock Washer	CW2-0307-G	007-494
14.	Screw, Starter Lever	VM28/269	———
15.	Spring, Starter Lever	VM28/293	002-665
16.	Washer (Steel)	VM28/449	002-664
17.	Washer (Nylon)	VM28/268	———
18.	Shaft, Starter	VM24/462	———
19.	Screw, Starter Lever	VM28-360	———
20.	Starter Lever	VM26/435	002-660
21.	Filter Screen	VM18/233	002-606
22.	Washer, Valve Seat	B34/52-0.5	002-187
23.	Needle Valve Assembly **(2.5)**	N122.032-2.5	002-503
	Needle Valve Assembly **(2.8)**	N122.032-2.8	002-504
24.	Float Pin	BV26/22	002-107
25.	Float Assembly.	VM26/260	002-501
26.	Gasket, Float Chamber (Bowl)	VM26/258	002-502
27.	Float Chamber (Bowl)	VM29/20 100	———
28.	Screw with Lock Washer	CW2=0416-B	002-615
29.	O-Ring, Float Bowl Drain Plug	VM28/254	002-531
30.	Drain Plug, Float Bowl	VM28/253	002-526
31.	E-Clip, Starter Plunger	KP/13	002-673
32.	Bushing, Nylon	VM28/450	———
33.	Cap, Starter Plunger Rubber	VM20/455	002-084
34.	Fitting, Starter Plunger	VM28/359	———
35.	O-Ring, Starter Plunger	VM18/249	002-672
36.	Spring, Starter Plunger	VM16/42A	002-671
37.	Starter Plunger	VM24/510	002-670
38.	Pilot Air Screw	VM26/288	002-506
39.	O-Ring, Pilot Air Screw	VM14/75	002-676
40.	Spring, Pilot Air Screw	M12F/46A	002-181
41.	Pilot Jet	VM22/210	Pg.212
42.	Needle Jet O-6 **(Std)**	#261 Series	003-535
43.	Main Jet	N100.604	Pg.214
44.	Throttle Shaft	VM29/11	002-513
45.	Lever, Throttle Shaft	VM24/533	———
46.	Spring, Throttle Return	VM24/536	———
47.	E-Ring	BSW28/70	002-355
48.	Ring, Throttle Lever	VM24/532	———
49.	Screw, Idle Adjusting	VM26/436	002-537
50.	Spring, Idle Adjusting	BNO42/31	002-538
51.	Screw, Throttle Bracket	C5-510	———
52.	Bracket, Throttle	VM24/466	———
53.	Screw with Lock Washer	CW2=0514-B	002-516
54.	Plate	VM28/498	002-517
55.	Spring, Shock	BN38/341	007-491
56.	Screw, Throttle Adjuster	N115.053	———
57.	Spring, Throttle Adjuster	N110.209	002-655
58.	Screw, Back Plate	C5-0614	———
59.	Back, Plate	VM24/460	———
60.	Bracket, Throttle Spring	VM24/513	002-533
61.	Screw, Throttle Spring Bracket	CW2=0514-B	002-516
62.	Screw with Spring Washer	CW2=0414	002-522
63.	Cover, Top (Mixing Chamber)	VM24/507	———
64.	Gasket, Top Cover	VM28/549	002-524
65.	Bolt	VM28/230	002-519
66.	Lock Washer	W4=05-B	———
67.	Cap Screw	VM29/04	———
68.	Spring	B21/20	———
69.	Lock Washer Plate	VM28/233	———
70.	Lever Pull	VM28/554	———
71.	Pin (Top)	VM28/105	———
72.	Pin (Bottom)	VM20/05	———
73.	Plate	VM20/06	———
74.	Connector	VM20/07	———
75.	Adjusting Screw	VM28/593	———
76.	Bolt, Link Lever	B2-0416	002-539
77.	Nut	N3=05	———
78.	Plate, Set	VM28/594	———
79.	Spring	VM28/592	———
80.	Link Lever Assembly	VM29/17	———
81.	Screw with Lock Washer	CW2=0305	002-527
82.	Bracket, Connecting	VM29/08	———
83.	Pin, Jet Needle Retaining	VM29/14	———
84.	Pin, Jet Needle Retaining	VM20/369	002-083
85.	Jet Needle	J8-5DL31	002-268
86.	Throttle Valve 1.5	VM29/15	003-168
	Throttle Valve 2.0	VM29/15	003-169
	Throttle Valve 2.5	VM29/15	003-170
87.	Jet Block	VM29/10	———
88.	Gasket, Jet Block	VM29/13	002-535
89.	Warning Tag	VM33/78	———

VM29 Needle Valve Assembly

No.23 in exploded view.

Size	Mikuni No.	Order No.
2.5	N122.032-2.5	002-503
2.8	N122.032-2.8	002-504

VM29 Throttle Valves

No.86 in exploded view.

Cutaway	Mikuni No.	Order No.
1.5	VM29/15	003-168
2.0	VM29/15	003-169
2.5	VM29/15	003-170

Honda CB750 Intake Manifolds

CB750 Intake Manifolds for SOHC 005-026.
Use when mounting VM29 smoothbores.

MIKUNI VM33 Smoothbore Exploded View

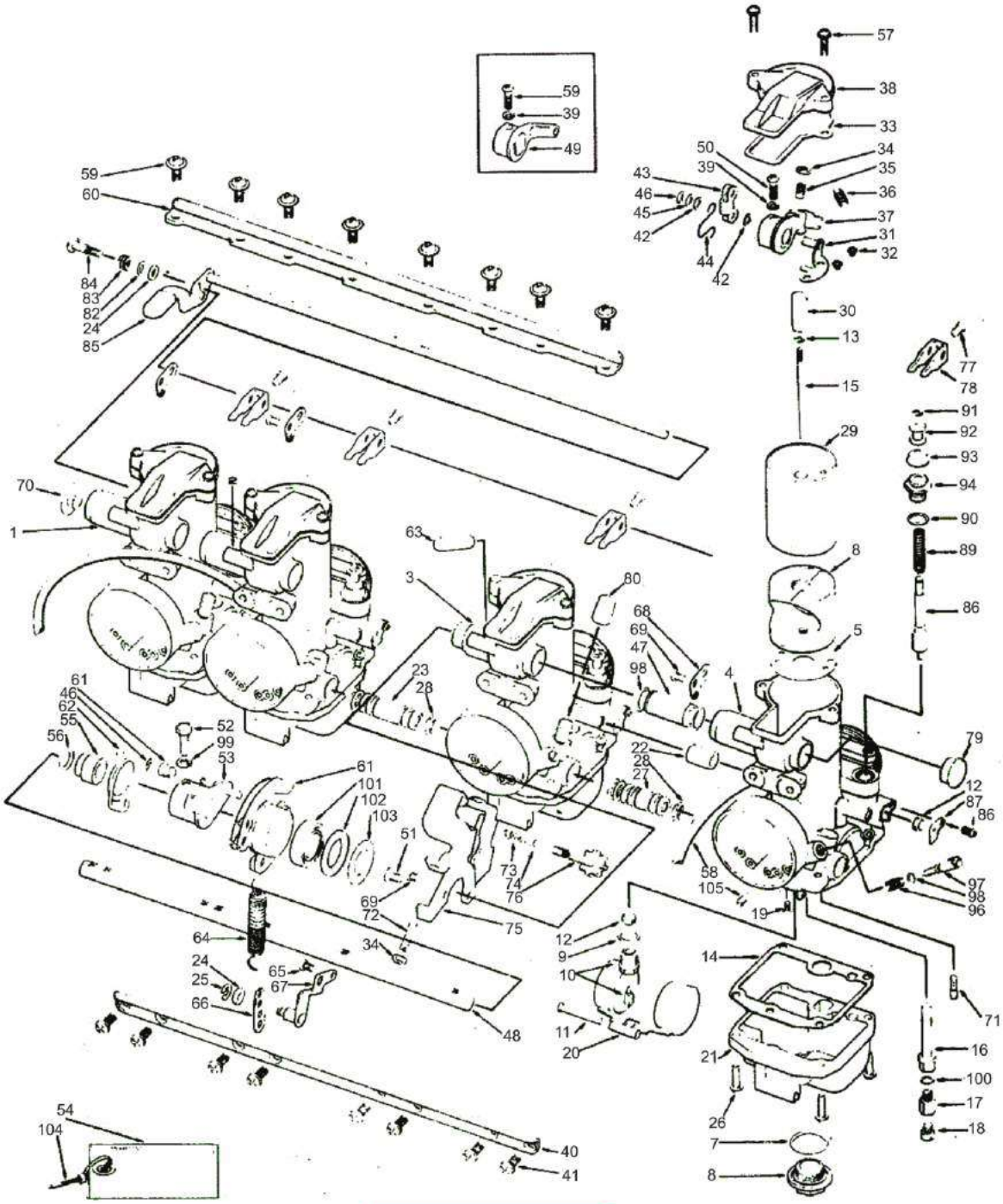

Float Height
23mm

Carburetors are intended for off-road riding and racing use only. Not legal for use in California or other locations where similar pollution laws may apply.

Standard Jetting Specifications VM33 Smoothbore

Application	Carb Model	Main Jet N100.604	Air Jet BS30/97	Pilot Jet VM22/210	Jet Needle	Needle Jet #261 Series	Float Height	Throttle Valve 832-39003
Honda CB900/1100F	VM33-A4	#125	.7	#30	#6DJ30-2	0-8	23mm	1.5
Kawasaki KZ1000/1100	VM33-A14	#127.5	1.2	#17.5	#6DJ30-4	0-6	23mm	1.5
Suzuki GS1000/1100	VM33-A14	#132.5	.6	#17.5	#6DJ30-4	0-6	23mm	2.0
Yamaha XS1100	VM33-A14/D45	#132.5	.9	#17.5	#6DJ30-4	0-6	23mm	2.0
Kawasaki ZX900, 1000 Ninja	VM33-A14/D45	#125	.9	#20	#6DJ30-4	P-0	23mm	2.0

* Please Note: The following is for parts reference only. This Mikuni carburetor is no longer in production.

VM33 Smoothbore Replacement Parts

• Lined through part numbers are no longer available.

No.	Description	Mikuni No.	Order No.
1.	Mixing Body	VM33SS101/01B	———
2.	Mixing Body	VM33SS101/01C	———
3.	Mixing Body	VM33SS102/01C	———
4.	Mixing Body	VM33SS103/01B	———
5.	Gasket	VM33/31	002-600
6.	Jet Block	VM33/20	———
7.	O-Ring	BNO42/64	002-602
8.	Drain Plug	TM32/41	007-646
9.	Washer, Needle Valve	B34/52-0.5	002-187
10.	Assembly, Needle Valve (2.5)	N122.032-2.5	002-503
	Assembly, Needle Valve (2.8)	N122.032-2.8	002-504
11.	Float Pin	VM30/160	002-605
12.	Filter Screen	VM18/233	002-606
13.	E-Ring	VM20/369	002-083
14.	Gasket, Float Bowl	VM30-257	002-607
15.	Jet Needle	J8-6DJ30	002-340
16.	Needle Jet	#261 Series, O-8	003-536
17.	Main Jet Extender	697-05001A	002-608
18.	Main Jet	N100.604	Pg.214
19.	Screw	C6=0307	002-609
20.	Float Assembly	VM26/260	002-501
21.	Float Chamber Body	VM29/20-100	———
22.	Hose, Air Vent	888-36003A	———
23.	Fuel Nipple	792-20008	002-612
24.	Washer	VM28/268	———
25.	E-Ring	BN38/135	002-614
26.	Screw with Lock Washer	CW2=0416-B	002-615
27.	Fuel Nipple	792-20007	———
28.	O-Ring	BV30/40	002-617
29.	Throttle Valve 1.5	832-39003-1.5	003-198A
	Throttle Valve 2.0	832-39003-2.0	003-198
	Throttle Valve 2.5	832-39003-2.5	003-198B
30.	Bushing Collar	VM33/60	———
31.	Bracket Assembly	VM33/71	002-619
32.	Screw with Lock Washer	CW2=0305	002-527
33.	Gasket, Top Cover	VM33/32	002-620
34.	Adjuster Nut	N138.050	002-621
35.	Adjuster Screw	VM33/21	———
36.	Screw	730-06005	———
37.	Lever Assembly	VM33/64	002-624
38.	Top Cover	776-39001	002-625
39.	Lock Washer	W4-04-0	002-626
40.	Bracket Plate, Front	VM33/75	002-627
41.	Screw	C2-0512-B	002-628
42.	Washer (Polyester)	B40I/10	002-629
43.	Plate, Connecting	VM33/45	002-630
44.	Spring	VM33/49	002-631
45.	Washer	M10/56	002-632
46.	E-Ring (Clip)	BSW28/70	002-355
47.	Collar Pipe	813-28001	002-633
48.	Shaft	700-17003A	002-634
49.	Lever Assembly	VM33/52A	———
50.	Screw	VM33/73	002-636
51.	Screw	C5=0510	———
52.	Bolt	VM28/230	002-519
53.	Lever Assembly	VM33/26	002-638
54.	Name Plate	VM33/78	———
55.	Collar	VM33/68A	002-639
56.	Seal, Felt	VM28/403	002-640
57.	Screw with Lock Washer	CW2=0416B	002-615
58.	Hose, Air Vent	N149.030	002-641
59.	Screw	N138.186	002-642
60.	Bracket Plate, Rear	VM33/67	002-643
61.	Bell Crank Assembly	VM33/38	002-644
62.	Spring	VM33/35	002-645
63.	Vacuum Cap	N148.013	002-646
64.	Throttle Return	VM22/349	002-647
65.	Screw	C2-0508-B	002-648
66.	Adjuster Plate	VM33/34	002-649
67.	Bracket	VM33/23	002-650
68.	Choke Shaft Plate	VM33/58	———
69.	Screw	C2-408-B	002-652
70.	Cap, Side	VM33/63	002-653
71.	Pilot Jet	VM22/210	Pg.212
72.	Adjuster Screw	N138.049A	002-654
73.	Spring	N110.209	002-655
74.	Washer	N141.217	———
75.	Main Bracket	VM33/43	———
76.	Adjuster Screw	603-25001A	———
77.	Screw	N158.052	002-659
78.	Lever	VM26/435	002-660
79.	Cap Side	VM33/70	002-661
80.	Fuel Cap	VM33/72	———
81.	Ring	VM24/532	———
82.	Washer	VM28/449	002-664
83.	Spring	VM28/293	002-665
84.	Screw	VM28/269	———
85.	Choke Shaft Assembly	VM33/56A	———
86.	Screw	C2-0306-B	002-668
87.	Side Plate	VM33/59	002-669
88.	Starter Plunger	VM24/510	002-670
89.	Plunger Spring	VM16/42A	002-671
90.	O-Ring	VM18/249	002-672
91.	E-Ring	KP/13	002-673
92.	Ring	VM28/450	———
93.	Rubber Cap	VM20/455	002-084
94.	Guide Holder	VM38/359	———
95.	Spring	M12F/46A	002-181
96.	O-Ring	M14/75	002-676
97.	Air Screw	VM26/287	002-677
98.	O-Ring	0S/05B	———
99.	Lock Washer	W4-05	002-679
100.	Washer	BV23/196	002-680
101.	Bearing	VM33/61	———
102.	Seal, Felt	VM33/37	———
103.	Washer	946-17001	002-683
105.	Air Jet	BS30/97	Pg.213
106.	Restrictor	VM33/82	002-684

VM33 Needle Valve Assembly (No.10 exploded view)

Size	Mikuni No.	Order No.
2.5	N122.032-2.5	002-503
2.8	N122.032-2.8	002-504

VM33 Throttle Valves (No.29 exploded view)

Cutaway	Mikuni No.	Order No.
1.5	832-39003	003-198A
2.0	832-39003	003-198
2.5	832-39003	003-198B

MIKUNI HSR Carburetor Kits

Easy Kits for Sportsters, Big Twin & Twin Cam

These kits are designed to work with your original Harley-Davidson® intake manifold, choke cable, air cleaner and throttle cables. You can run other high performance air filters designed for the CV type carb by using the special adapter included in kit. Dramatically improves the performance and delivers unmatched throttle response and acceleration.

HARLEY-DAVIDSON®

1340 Big Twin Evolution (1990-1999) with stock CV Type Manifold

Order No. 001-602

Mikuni No. 42-7. Kit includes HSR42mm carburetor, airbox adapter and chrome cover.

Twin Cam (1999 to present), Big Twin (1990-1999)

Order No. 001-621

Mikuni No. 42-18. Kit includes HSR42mm carburetor and airbox adapter. Twin Cam model use stock oval cover. Works with Screamin Eagle air filter.

Sportster 1200 (1994-2004)

Order No. 001-605

Mikuni No. 42-10. Kit includes HSR42mm carburetor with special airbox back plate. Requires the use of the stock oval cover and a Screamin Eagle high flow replacement air filter.

Sportster 1200 (1994-2006), Buell models

Order No. 001-606

Mikuni No. 42-11. Must use with aftermarket performance air filter.

HSR Race Kit 48mm for Big Motors

These kits are designed for the serious race engine builder and extreme street motor enthusiast looking for more power. Recommended for 1200cc engines or bigger with high flow cylinder heads and performance cams.

HSR48 Race Kit 48-2 **Order No. 001-635**

Includes 48mm smoothbore carb, rubber mounting flange (78mm bolt hole centers), choke cable and main jets. Uses stock Harley Big Twin CV type throttle cables.

Note: Manifold, air filter or velocity stack not included.

HSR48 Race Kit 48-2P **Order No. 001-560**

Includes 48mm polished smoothbore carb, rubber mounting flange (78mm bolt hole centers), choke cable and main jets.

Note: Manifold, air filter or velocity stack not included.

Total Kits for Big Twin Evolution & Twin Cam

These kits include an HSR42 or HSR45 carburetor, performance manifold, rubber flange, high flow air filter, chrome cover, chrome breather kit and mounting hardware.

Total Kits allow fitments of a HSR42 or HSR45mm carburetor to any Big Twin Evolution or Twin Cam model. Manifold clamps and seals are not included in kit.

HARLEY-DAVIDSON®

Twin Cam 88/95 (1999 to present)

Order No. 001-622

Mikuni No. 42-19. Includes Breather Kit #KHS-030 for Twin Cams.

Note: Use your stock throttle cables.

Twin Cam 88/95 (1999 to present)

Order No. 001-630

Mikuni No. 45-4. Includes Breather Kit #KHS-030 which utilizes MAP location.

Note: Uses stock CV type throttle cables.

1340 Big Twin Evolution (1984-1999)

Order No. 001-603

Mikuni No. 42-8. Includes Breather Kit #KHS-020 for 1993 and later models.

Note: 1984 to 1989 models require throttle cables from 1990 to 1995 model bikes. Do not use on 1984-1988 FLT models. Gas Tank may hit carburetor.

1340 Big Twin Evolution (1984-1999)

Order No. 001-610

Mikuni No. 45-2. Includes breather kit #KHS-020.

Note: 1984 to 1989 models require throttle cables from 1990 to 1995 model bikes. Do not use on 1984-1988 FLT models. Gas Tank may hit carburetor.

1340 Big Twin Evolution (1984-1999)

Order No. 001-611

Mikuni No. 45-3. Includes breather kit #KHS-020 and a 45mm flange. Intake Manifold not included in kit. **Note:** 1984 to 1989 models require throttle cables from 1990 to 1995 model bikes. Do not use on 19841988 FLT models. Gas Tank may hit carburetor.

Carburetor Kits not designated as C.A.R.B. exempt are not legal for motor vehicles operated on public highways in the state of Ca., or in other states and countries where similar anti-pollution laws may apply.

MIKUNI HSR Carburetors, Parts & Accessories

Mikuni Individual HSR Carburetors

For the performance engine builder needing the carburetor only for specific custom applications. Available in standard aluminum finish or polished version.

Description	Mikuni No.	Order No.
42mm Carb only, standard finish	TM42-6	001-549
42mm Carb only, polished finish	TM42-6PK	001-551
45mm Carb only, standard finish	TM45-2K	001-554
45mm Carb only, polished finish	TM45-2PK	001-555
48mm Carb only, standard finish	TM48-1	001-558
48mm Carb only, polished finish	TM48-1PK	001-559

Note: 001-549 - use stock choke cable from H-D CVK type carb.

HSR42/45/48 Carburetor Rebuild Kits

Kits contain all the necessary parts and gaskets to rebuild an HSR carburetor. Includes needle valve assembly, o-rings, gaskets and screws. Sold as a kit.

Description	Mikuni No.	Order No.
HSR42/45mm Carburetor Rebuild kit	KHS-016	002-989
HSR48mm Carburetor Rebuild kit	KHS-031	002-982

Qt	Contents
1	Gasket, Top Cover
1	E-Ring, Jet Needle
1	Washer, Jet Needle
1	O-Ring, Pilot Air
2	O-Ring, Fuel Joint
1	O-Ring, A/P
1	O-Ring, Needle Valve
1	Screw, N.V. Retainer
1	Needle Valve Assy #4.2 (HSR42/45)
	Needle Valve Assy #4.5 (HSR48)
1	Packing, Float Bowl
1	Hose, Overflow
1	O-Ring, Drain Plug
4	Screw, Float Bowl (short)
1	Boot, A/P Rod

HSR42 Dealer Jet Assortment Kit

This jet assortment kit contains 44 pieces in a special jet box. Included are qt 2 each #150 thru #170 main jets, qt 2 each #20 thru #32.5 pilot jets, qt1 each #96, #97 and #98 needles, qt2 each #60 a/p nozzles, needle clips and washers. Sold as a kit.

Description	Mikuni No.	Order No.
44 Pc. Jet Kit Assortment with storage box	KHS-025	002-983

HSR45 & HSR48 Dealer Jet Assortment Kit

Description	Mikuni No.	Order No.
HSR45 Jet Kit	KHS-045	002-976
HSR48 Jet Kit	KHS-048	002-977

HSR Accelerator Pump Nozzles Sold each.

Description	Mikuni No.	Order No.
Standard	TM42/11-70	007-487
Leaner	TM42/11-60	007-486
Leanest	TM42/11-50	007-485

HSR Needle Valve Assemblies Sold each.

Size	Description	Mikuni No.	Order No.
(2.3)	Fuel Pump	786-27001	007-478
(3.5)	Offroad	786-27001	007-477
(4.2)	Std on HSR42/45	786-27001	007-476
(4.5)	Std on HSR48	786-27002-1A-4.5	007-708
	O-ring for Needle Valve Seat	616-33003	007-470

HSR Main Jet Extender Kit

Description	Mikuni No.	Order No.
Main Jet Extender Kit	KHS-034	002-978

MIKUNI HSR42/45/48 Parts & Accessories

HSR Intake Performance Manifolds

Description	Mikuni No.	Order No.
Intake Manifold for HSR42/45 Evo Style without hole.	HS42/061-45	007-459
Intake Manifold for HSR42/45 Twin Cam Style with MAPS hole.	HS42/061-45TC	007-457

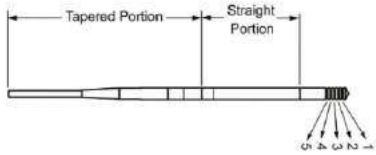

HSR Jet Needles

Sold each. See page 204 for Jet Needle details.
No.7 in exploded view on page 174, -Old style, New Style page 176.

Jet Needle No.	Needle Diameter before Taper (mm)	Air/Fuel Ratio	Order No.
Applications: **HSR42**			
#8DDY01-98	2.98	Leaner	007-083
#8DDY01-97 **(Std)**	2.97	↑	007-082
#8DDY01-96	2.96	↓	007-081
#8DDY01-95	2.95	Richer	007-080
Applications: **HSR45**			
#8CFY02-98	2.98	Leaner	007-103
#8CFY02-97 **(Std)**	2.97	↑	007-102
#8CFY02-96	2.96	↓	007-101
#8CFY02-95	2.95	Richer	007-100
Applications: **HSR48**			
#8CFY15-98	2.98	Leaner	007-098
#8CFY15-97 **(Std)**	2.97	↑	007-097
#8CFY15-96	2.96	↓	007-096
#8CFY15-95	2.95	Richer	007-095

HSR K&N Air Filters & Chrome Covers

Description	Mikuni No.	Order No.
K&N Air Filter for HSR 2.5" thick Standard in HSR Kits, washable	HS42/012	007-463
K&N Air Filter for HSR 3.0" thick Extra Wide, High-Performance, washable	HS42/012-300	007-466
Chrome Air Filter Cover, no cut-outs	HS42/060	007-464
Chrome Air Filter Cover, OEM with cut-outs	HS42/059	007-462

HSR Air Box Adapter Kit

Kit includes air box adapter, qt 3 screws and o-ring.
Mikuni part number HS42-001K

Order No. 007-455

Individual Replacement Parts - Sold each.

Description	Mikuni No.	Order No.
Air Box Adapter	HS42/001	007-450
Adapter Screw	HS42/002	007-453
O-Ring Seal for Air Box Adapter	HS42/003	007-454

Rubber Mounting Flanges w/Clamp

Sold each.

Application	Mikuni No.	Order No.
H-D® HSR42 TO 2 BOLT FLANGE (round)	HS42/018-42K	007-460
H-D® HSR45 TO 2 BOLT FLANGE (round)	HS42/018-45K	007-461
H-D® HSR48 TO 2 BOLT FLANGE (oval)	HS42/062-48K	007-467
H-D® HSR42 TO 2 BOLT FLANGE (oval)	HS42/062-42K	007-468
H-D® HSR42 TO 2 BOLT FLANGE (oval)	HS42/062-45K	007-469

HSR Short Idle Screw (Optional)

No.55A in old style HSR parts list on **page 175** and **No. 59A** in New Style HSR parts list on **page 177.** Optional shorter length for all HSR42/45/48. Sold each.

Mikuni No.	Order No.
990-605-065	007-484

Note: Do not modify the idle screw or any of its component pieces. If the screw is removed, be sure to re-install with the components in place as shown in the exploded view on **page 174** and **page 176.**

MIKUNI HSR42/45/48 Parts & Accessories

HSR Chrome Carb Top

Top cover with HSR logo and gasket. For HSR42 and HSR45 Carburetors. Sold each.

Mikuni No.	Order No.
KHS-029	002-991

HSR Crankcase Head-Breather Kit

To mount the HSR42/45 carb and filter to EVO Big Twins and Twin Cam.

Mikuni No.	Order No.
KHS20.	002-984

Fits EVO Big Twins, 1991 to present Sportsters and 1993 to present 1340's. Includes chrome banjo's, vent bolts and brackets.

Mikuni No.	Order No.
KHS30.	002-981

1999 to present Twin Cam 88/95. Includes chrome banjo's, vent bolts and brackets.

HSR Easy Tool Kit

The Easy Tool Kit includes an Easy Wrench with 17mm x 11/16" open end wrench, Mini-T Jet Wrench with Phillips & Flat head blades and a 2.5mm Ball End Allen bit with 6mm hex.

Mikuni No.	Order No.
KHS-033.	002-046

007-764 007-465

HSR Air Filter Mounting Bracket

Chrome Air Filter mounting bracket is used for bikes w/o breather kit. Chrome Breather Bracket is from crankcase head breather kits. Sold each.

Mikuni No.	Order No.
HS42/067 Air Filter Bracket	007-764
HS42/019 Air Filter Bracket	007-465

007-208

007-761

HSR Choke Cable & Choke Pull Assemblies

Fits all style HSR42/45/48. Sold each.

Description	Mikuni No.	Order No.
Choke Cable Assembly	990-662-002	007-208
Choke Pull Assembly	TM29/31	007-761
Chrome Bracket	RS36/23	007-688

HSR Throttle Cables Sold each.

HSR42/45 from 1994 to 1999 required Mikuni throttle cables. HSR42 carburetors made after May 1999, and HSR45 made after March 2000 USE STOCK HARLEY-DAVIDSONÆ CABLES.
Note: Open = Throttle, Close = Idle.

Description	Notes	Mikuni No.	Order No.
Fitment: 1970 to 1995 Screw in Type for Early HSR42/45			
Open (Pull) Cable	Standard (38")	HS42/028A	007-451
Close (Push) Cable	Standard (38")	HS42/029A	007-452
Open (Pull) Cable	Dresser (47")	KHS/039	007-550
Close (Push) Cable	Dresser (47")	KHS/040	007-551
Fitment: 1996 to Present Push in Type			
Open (Pull) Cable	Standard (38")	KHS/043	007-554
Close (Push) Cable	Standard (38")	KHS/044	007-555
Open (Pull) Cable	Dresser (47")	KHS/041	007-552
Close (Push) Cable	Dresser (47")	KHS/042	007-553
Fitment: Buell Late Style 1999			
Push/Pull Cable Set	Late Style HSR	01-0714	021-937

MIKUNI HSR42/45 Old Style Exploded View

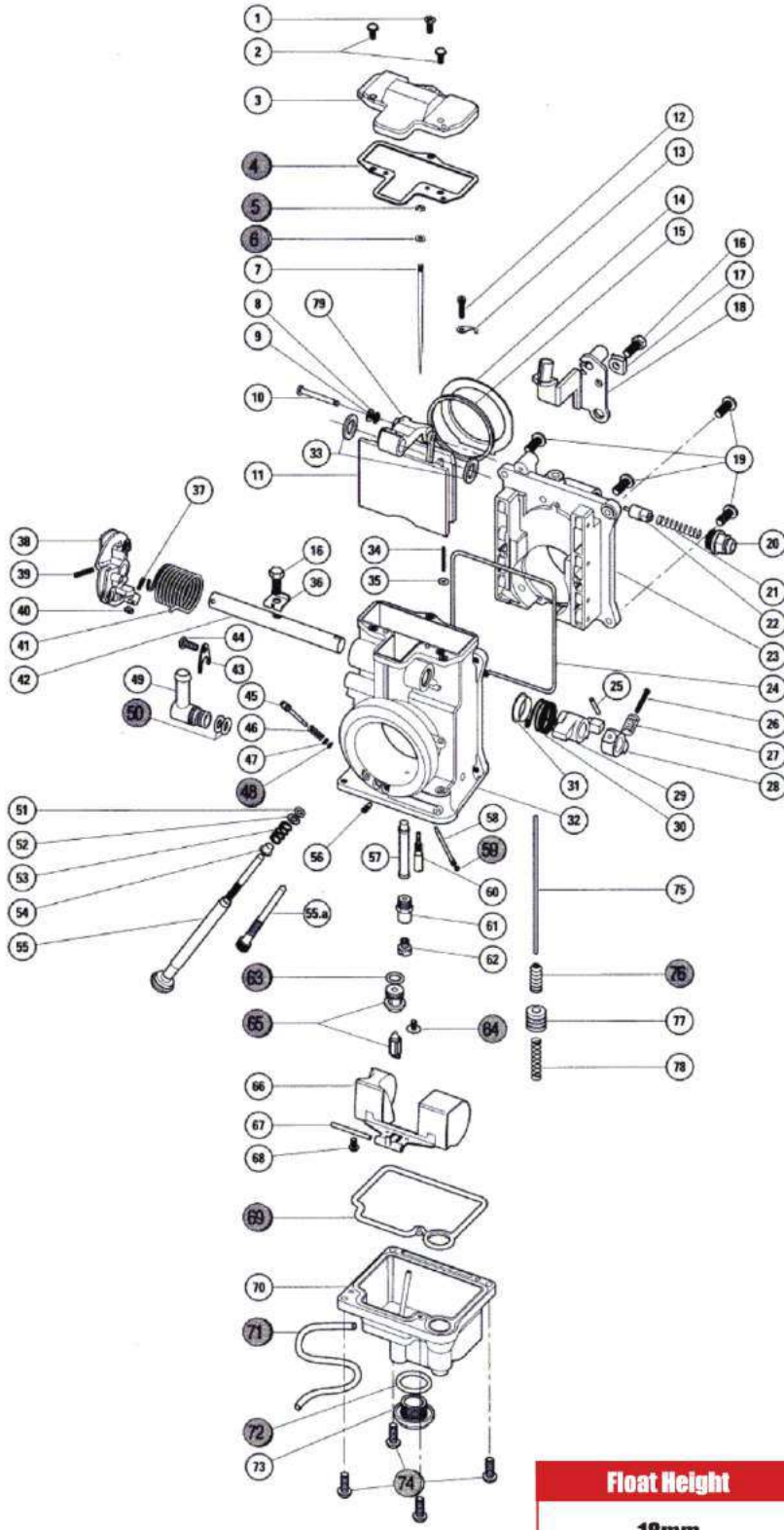

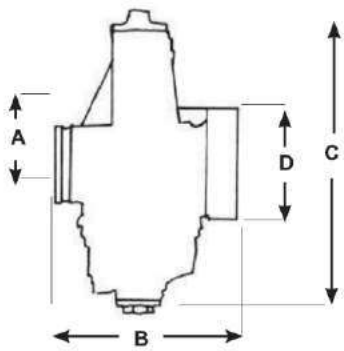

Carburetor Dimensions

Size (mm)	A	B	C	D
HSR42	46	90	170	65
HSR45	49	90	170	65

Float Height
18mm

Not LEGAL for sale or use in California on pollution controlled motor vehicles, or in other states where similar laws may apply.

HSR42/45 Old Style Replacement Parts

• Lined through part numbers are no longer available.

Mikuni Part No. Highlighted in BOLD RED are included in rebuild kit.

No.	Description	Mikuni No.	Order No.
1.	Screw, Top Cover 4x10mm	C5=410-B	007-624
2.	Screw, Top Cover 4x14mm (qt2)	CW2=0414-B	002-522
3.	Top Cover	776-39005	007-741
4.	Gasket, Top Cover	**TM42/04**	007-480
5.	E-Ring, Jet Needle	**BS32/126**	002-455
6.	Washer, Jet Needle	**826-03002**	007-267
7.	Jet Needle (HSR42) Std.	J8-8DDY01-96	007-082
	Jet Needle (HSR45) Std.	J8-8CFY02-96	007-102
8.	E-Ring	B40I/56	007-616
9.	Packing, Link Lever	B40I/10	002-629
10.	Pin, Link Lever	834-23041	007-743
11.	Throttle Valve 3.0	TM42/08-3.0	007-432
12.	Screw, Needle Retainer	739-13001	007-123
13.	Clip, Needle Retainer	TM42/16	007-671
14.	Sealing Ring, Throttle Valve	TM42/13	007-723
15.	Seal, Throttle Valve	TM42/10	007-670
16.	Bolt	TM40/89	007-669
17.	Plate, Lock Tab	TM42/38	007-675
18.	Bracket, Cable **(Standard)**	TM42/34	007-740
	Used on Old Style HSR42/45 manufactured before 2000.		
	Throttle Linkage is on left side.		
18A.	Bracket, Cable **(Lower Position)**	TM42/34A	———
	(Lower Bracket, lowers cable position, use with larger fuel tanks)		
19.	Screw	C2=0514-B	007-698
20.	Starter Nut, Choke	640-12001	007-161
21.	Spring, Starter Plunger	VM14/241	007-678
22.	Starter Plunger	N189.192	007-635
23.	Mixing Body (HSR42/45)	TM42/06	———
	Mixing Body (HSR48)	TM48/02	———
24.	Seal, Spigot Body	616-94029	007-473
25.	Pin, A/P Throttle Lever	BN38/43	007-617
26.	Screw, A/P	MC-0316-B	007-193
27.	Spring, A/P	M12F/46-BB	007-629
28.	Lever, A/P	TM42/28	———
29.	Lever, A/P	TM42/21	007-721
30.	Spring, A/P	TM42/37	———
31.	Ring	E204.040	007-628
32.	Mixing Body Assembly	TM42SS1/01-0	———
33.	Packing, Shaft	BS36/95	007-615
34.	Adjusting Screw, A/P	TM42/36	007-701
35.	O-Ring, A/P Screw	B30/205	007-188
36.	Shaft Lock, Tab	TM42/17	007-703
37.	Screw, Throttle Stop	B30/1069	007-746
38.	Lever Assembly, Throttle	TM42/20	007-673
39.	Pin, Throttle Lever	N138.019	007-171
40.	Nut, Throttle Stop Screw	N3=4	007-637
41.	Spring, Throttle Return	TM42/19	007-672
42.	Shaft, Throttle	700-15011	———
43.	Plate, Fuel Joint Retainer	TM42/15	007-704
44.	Screw	C2=0410-B	007-705
45.	Screw, Pilot Air Adjusting **(Std)**	604-26014	007-706
46.	Spring, Pilot Air Adjusting	N133.206	007-137
47.	Washer, Pilot Air Adjusting	VM12/205	007-482
48.	O-Ring, Pilot Air Adjusting	**N133.037**	002-858
49.	Fuel Joint	TM40/27	007-667
50.	O-Ring, Fuel Joint	**KV/10**	002-709
51.	Packing, Idle Adjuster	B30/398	007-614
52.	Washer, Idle Adjuster (Steel)	VM22/138	007-680
53.	Spring, Idle Adjuster	730-09018	007-603
54.	Ring, Idle Adjuster (Brass)	925-15001	007-612
55.	Idle Adjuster Assembly (Long)	TM42/32	007-674
55A.	Idle Adjuster Screw (Short)	999-605-065	007-484
56.	Air Jet (Blank)	BS30/97-00	002-149
57.	Needle Jet #723 Series	784-430000-Y-6	Pg.206
58.	Nozzle, Accelerator Pump Std.	TM42/11-70	007-487
59.	O-Ring, A/P	**N124.063**	007-163
60.	Pilot Jet#30 **(Std.)**	VM28/486	004-034
	Pilot Jet - Optional Sizes	VM28/486	Pg.212
61.	Extender, Main Jet	TM42/12	007-722
62.	Main Jet #160 **(Std.)**	N100.604	004-204
	Main Jet - Optional Sizes	N100.604	Pg.214
63.	O-Ring, Needle Valve Seat	**616-33003**	007-470
64.	Screw, Needle Valve Retainer	**VM13/216**	007-174
65.	Needle Valve Assembly w/O-Ring	**786-27001-4.2**	007-476
66.	Float Assembly	859-32027	007-497
67.	Pin, Float	BV26/22	002-107
68.	Screw, Float Pin	C2=0410	007-620
69.	Packing, Float Bowl	**616-94028**	007-472
70.	Float, Chamber Body	TM42/05	007-500
71.	Hose, Overflow	**N122.028**	007-630
72.	O-Ring, Drain Plug	**VM28/254**	002-531
73.	Drain Plug	TM32/41	007-646
74.	Screw, Float Bowl	**C2=0412-B**	007-201
75.	Rod, A/P	TM36/44-1A	007-191
76.	Boot, A/P	**TM36/64**	007-195
77.	Plunger, A/P	TM36/60	007-198
78.	Spring, A/P	VM14SC13/89	007-200
79.	Lever, T.V.	TM42/03	007-742

Note: Old Style HSR42/45 were manufactured before year 2000. Throttle linkage is on left.

HSR42/45 Carburetor Rebuild Kit

Kit contains GENUINE Mikuni parts, all the necessary parts and gaskets to rebuild an HSR carburetor. Includes needle valve assembly, o-rings, gaskets and screws. Sold as a kit.

Mikuni No. KHS-016. **Order No.** 002-989

Exploded View No.	Qt	Contents
4	1	Gasket, Top Cover
5	1	E-Ring, Jet Needle
6	1	Washer, Jet Needle
48	1	O-Ring, Pilot Air
50	2	O-Ring, Fuel Joint
59	1	O-Ring, A/P
63	1	O-Ring, Needle Valve
64	1	Screw, N.V. Retainer
65	1	Needle Valve Assy
69	1	Packing, Float Bowl
71	1	Hose, Overflow
72	1	O-Ring, Drain Plug
74	4	Screw, Float Bowl (short)
76	1	Boot, A/P Rod

MIKUNI HSR42/45/48 New Style Exploded View

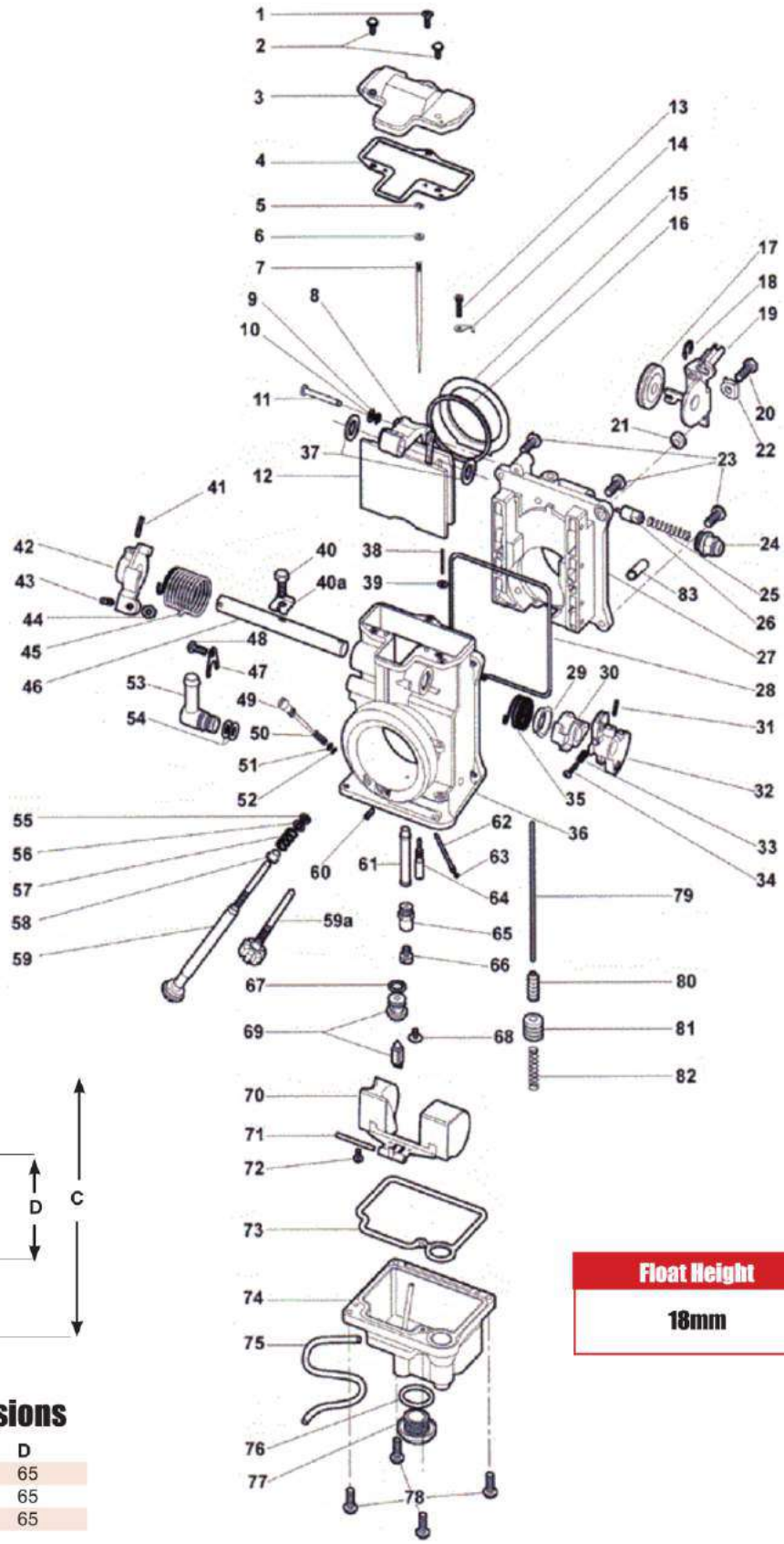

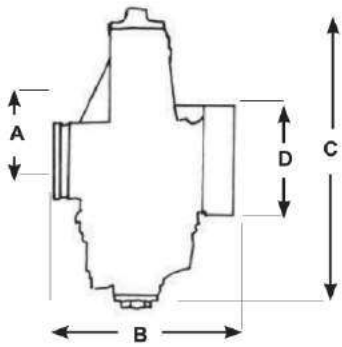

Carburetor Dimensions

Size (mm)	A	B	C	D
HSR42	46	90	170	65
HSR45	49	90	170	65
HSR48	53	90	178	65

Float Height
18mm

IMPORTANT: Mikuni HSR Carburetors are legal in California only for RACING vehicles which may never be used upon a public street or highway. In other locations check for similar laws which may apply.

HSR42/45/48 New Style Replacement Parts

• Lined through part numbers are no longer available.

Mikuni Part No. Highlighted in BOLD RED are included in rebuild kit.

No.	Description	Mikuni No.	Order No.
1.	Screw, Top Cover 4x10mm	C5=410-B	007-624
2.	Screw, Top Cover 4x16mm (qt2)	CW2=0416-B	002-615
3.	Top Cover **(HSR42/45)**	776-39005	007-741
3A.	Top Cover **(HSR48)**	HS42/081	007-691
4.	Gasket, Top Cover	**TM42/04**	007-480
5.	E-Ring, Jet Needle	**BS32/126**	002-455
6.	Washer, Jet Needle Clip	**826-03002**	007-267
7.	Jet Needle (HSR42) **Std.**	J8-8DDY01-97	007-082
	Jet Needle (HSR45) **Std.**	J8-8CFY02-97	007-102
	Jet Needle (HSR48) **Std.**	J8-8CFY15-97	007-097
8.	Lever, Throttle Valve **(HSR42/45)**	TM42/03	007-742
8A.	Lever, Throttle Valve **(HSR48)**	TM42/08-1A	———
9.	E-Ring, Link Lever	B40I/56	007-616
10.	Packing, Link Lever	B40I/10	002-629
11.	Pin, Link Lever	834-23041	007-743
12.	Throttle Valve (Slide)	TM42/08-3.0	007-432
13.	Screw, Needle Retainer	739-13002	007-692
14.	Clip, Needle Retainer	TM42/16	007-671
15.	Sealing Ring, T.V. **(HSR42/45)**	TM42/13	007-723
15A.	Sealing Ring, T.V. **(HSR48)**	TM48/04	———
16.	Seal, Throttle Valve	TM42/10	007-670
17.	Pulley, Cable Bracket	925-98006	007-693
18.	E-Ring, Cable Bracket	T53974	007-694
19.	Bracket Assy., Cable	TM42/51	007-695
19A.	Bracket Assy., Sportster/Buell	TM42/53	007-724
20.	Bolt, Bracket	B3=0520-B	007-696
21.	Spacer, Bracket	VM28/204	007-697
22.	Plate, Lock Tab	TM42/38	007-675
23.	Screw	C2=0514-B	007-698
24.	Guide Holder (Starter)	640-12001	007-161
25.	Spring, Starter Plunger	VM14/241	007-678
26.	Starter Plunger	N189.192	007-635
27.	Body **(HSR42/45)**	TM42/06	———
27A.	Body **(HSR48)**	TM48/02	———
28.	Seal, Spigot Body	616-94029	007-473
29.	Ring (Steel)	925-19011	———
30.	Lever, A/P	TM42/43	007-699
31.	Pin, Throttle Lever	N138.019	007-171
32.	Lever, Throttle	TM42/48	007-700
33.	Spring, Accelerator Pump	M12F/46-BB	007-629
34.	Screw, Accelerator Adjust	MC-0316-B	007-193
35.	Spring, Accelerator Pump	TM42/47	007-744
36.	Mixing Body **(HSR42/45)**	TM48SS1/01-0	———
36A.	Mixing Body **(HSR48)**	TM48SS1/01	———
37.	Packing, Shaft (Plastic)	BS36-95	007-615
38.	Adjusting Screw, A/P	TM42/36	007-701
39.	O-Ring, A/P Screw	B30/205	007-188
40.	Bolt	TM40/89	007-669
40A.	Plate, Lock Tab for Shaft	TM42/17	007-703
41.	Pin, Return Lever	BN38/43	007-617
42.	Lever, Return	TM42/46	007-745
43.	Screw, Throttle Stop	B30/1069	007-746
44.	Nut, Throttle Stop	N3=04	007-637
45.	Spring, Throttle Return	TM42/19	007-672
46.	Shaft, Throttle	700-15012	———
47.	Plate, Fuel Joint Retainer	TM42/15	007-704
48.	Screw, Fuel Joint Retainer	C2=0410-B	007-705
49.	Screw, Pilot Air Adjusting	604-20614	007-706
50.	Spring, Pilot Air Screw	N133.206	007-137
51.	Washer, Pilot Air Screw	VM12/205	007-482
52.	O-Ring, Pilot Air Screw	**N133.037**	002-858
53.	Fuel Joint	TM40/27	007-667
54.	O-Ring, Fuel Joint	**KV/10**	002-709
55.	Packing, Idle Adjuster	B30/398	007-614
56.	Washer, Idle Adjuster (steel)	VM22/138	007-680
57.	Spring, Idle Adjuster	730-09018	007-603
58.	Ring, Idle Adjuster	925-15001	007-612
59.	Idle Adjuster Screw (Long)	TM42/32	007-674
59A.	Idle Adjuster Screw (Short)	990-605-065	007-484
60.	Air Jet (Blank)	BS30/97	002-149
61.	Needle Jet, #723 Series	784-430000	Pg.206
62.	Nozzle, Accelerator Pump **Std.**	TM42/11-70	007-487
	Nozzle, Accelerator Pump Optional sizes		Pg.171
63.	O-Ring, A/P Nozzle	**VN124.063**	007-163
64.	Pilot Jet #25 (#20 Sporty)	VM28/486	Pg.212
65.	Extender, Main Jet **(HSR42/45)**	TM42/12	007-722
65A.	Extender, Main Jet **(HSR48)**	TM42/12-1A	007-707
66.	Main Jet# 160 (HSR42)	N100.604-160	004-204
	Main Jet #175 (HSR45)	N100.604-175	004-210
	Main Jet #190 (HSR48)	N100.604-190	004-216
	Main Jet *Optional Sizes	N100.604	Pg.214
67.	O-Ring, Needle Valve	**616-33003**	007-470
68.	Screw, Needle Valve Retainer	**VM13/216**	007-174
69.	Needle Valve Assembly **(HSR42/45)**	**786-27001-4.2**	007-476
69A.	Needle Valve Assembly **(HSR48)**	**786-27002-1A-4.5**	007-708
70.	Float Assembly	859-32027	007-497
71.	Pin, Float	BV26/22	002-107
72.	Screw, Float Pin	C2=0410	007-620
73.	Packing, Float Bowl	**616-94028**	007-472
74.	Float, Chamber Body	TM42/05	007-500
75.	Hose, Overflow	**N122.028**	007-630
76.	O-Ring, Drain Plug	**VM28/254**	002-531
77.	Drain Plug **(HSR42/45)**	TM32/41	007-646
77A.	Drain Plug **(HSR48)**	TM32/41-1D	007-713
78.	Screw, Float Bowl	**C2=0412-B**	007-201
79.	Rod, A/P	TM36/44-1A	007-191
80.	Boot, A/P Rod	**TM36/64**	007-195
81.	Plunger, A/P	TM36/60	007-198
82.	Spring, A/P	VM14SC13/89	007-200
83.	Rubber Cap, Purge Port **(not shown)**	N198.063	007-716

HSR42/45/48 Carburetor Rebuild Kits

Kit contains GENUINE Mikuni parts, all the necessary parts and gaskets to rebuild an HSR carburetor. Includes needle valve assembly, o-rings, gaskets and screws. Sold as a kit.

Mikuni No.	Description	Order No
KHS-016	with 4.2 Needle Vlv. Assy. HSR42/45	002-989
KSR42/45	with 4.5 Needle Vlv. Assy. HSR48	002-982

Exploded View No.	Qt	Contents
4.	1	Gasket, Top Cover
5.	1	E-Ring, Jet Needle
6.	1	Washer, Jet Needle
52.	1	O-Ring, Pilot Air
54.	2	O-Ring, Fuel Joint
63.	1	O-Ring, A/P
67.	1	O-Ring, Needle Valve
68.	1	Screw, N.V. Retainer
69	1	Needle Valve Assy 4.2 **(HSR42/45)**
69A.	1	Needle Valve Assy 4.5 **(HSR48)**
73.	1	Packing, Float Bowl
75.	1	Hose, Overflow
76.	1	O-Ring, Drain Plug
78.	4	Screw, Float Bowl (short)
80	1	Boot, A/P Rod

MIKUNI TM Series Flat Slide

TM24 TM32/TM34 TM38 TM36 Pumper

Mikuni TM Flat Slide Carburetors

Mikuni's original FLAT SLIDE Carburetor. The TM series Carburetors provide significant performance improvements over older round slide Carburetors. Air flows faster and smoother through the TM series venturi due to the flat slide design and the jet blocks which help create smooth bore effect. The high velocity of the air flow means a stronger vacuum at the needle jet providing more precise metering and better throttle response. TM Flat Slide Carburetors are sold pre-jetted, jetting change and throttle valve change. (See listing below)
Please specify when ordering.

TM Flat Slide Standard Jetting Specifications

Carburetor	Main Jet	Main Air Jet	Pilot Jet	Pilot Air Jet	Needle Jet	Jet Needle	Throttle Valve & Cutaway	Mikuni No.	Order No.
TM24	4/042 #130	Fixed	VM22/210 #15	———	454 Series #Q-0	5N13	832-30006 #3.0	TM24-8001	001-017
TM28	4/042 #180	1.8	VM22/210 #15	———	175 Series #P-8	5DP39	832-33001 #2.5	VM28-418	001-023
TM32	4/042 #250	None	VM22/210 #45	———	389 Series #Q-2	5FP17	832-39012 #4.0	TM32-1	001-026
TM34	4/042 #280	None	VM22/210 #50	———	389 Series #Q-2	5FP17	832-39012 #4.0	TM34-2	001-033
TM36	4/042 #280	None	VM22/210 #50	———	389 Series #Q-6	6FJ40	832-43002A #4.0	TM36-2	001-038
TM38 (*47mm)	4/042 #230	None	VM22/210 #22.5	———	389 Series #Q-2	6FJ41	832-43011 #4.0	TM38-85	001-060
TM38 (*43mm)	4/042 #230	None	VM22/210 #22.5	———	389 Series #Q-2	6FJ41	832-43011 #4.0	TM38-86	001-061

***47mm = Spigot O.D. size, *43mm = Spigot O.D. size.**

TM Flat Slide with Accelerator Pump Standard Jetting Specifications

TM33	N100.64 #127.5	0.7	VM28/486 #37.5	1.1	640 Series #P-8	5FP96	832-38007 #1.5	TM33-8012	001-032
TM36	N100.64 #130	None	VM28/486 #12.5	1.0	568 Series #P-8	9DZH6-50	TM36/137 #2.0	TM36-68	001-552
TM40 (HS40)	N100.64 #165	Plugged	VM28/486 #17.5	1.1	568 Series #Y-6	9DJY04-96	TM40/81	TM40-6	001-085

TM Flat Slide Float Height

TM24-8001	TM28-418	TM32-1	TM33-8012 Pumper	TM34-2	TM36-2	TM36-68 Pumper	TM38-85/86	TM40-6 (HS40) Pumper
22 - 24mm	22 - 24mm	17 - 19mm	14mm	17 - 19mm	17 - 19mm	19mm	17 - 19mm	19mm

Special Set TM Flat Slide Carburetors

Use the following part numbers when ordering for special jetting request.

Carburetor	Jetting Change	Throttle Valve Change
TM24	001-170	———
TM28	001-172	———
TM32	001-176	———
TM34	001-178	———
TM36	001-180	001-181
TM38 with 47mm Spigot O.D.	001-154	001-155
TM38 with 43mm Spigot O.D.	001-152	001-153

TM Flat Slide Carburetors w/Accelerator Pump

Use the following part numbers when ordering for special jetting request.

Carburetor	Jetting Change	Throttle Valve Change
TM33	001-187	———
TM36	001-185	———
TM40	001-190	———

TM Power Jet Kit

The Power Jet Kit is used on 2-stroke engine applications to improve mid-range throttle response and add additional fuel to wide open throttle running conditions. Easily installs on TM series Carburetors. (#80, #100 and #120 sized jets included) Sold as a kit.

Order No. 002-041

Mikuni TM Pro-Series Flat Slide Carburetors

The TM Pro-Series Carburetors feature proven performance gains with a hand machined venturi area. Testing shows Pro-Series carburetor design will out flow many other factory produced Carburetors by a minimum of 10% or more. This venturi design also provides a higher air speed rate at lower RPM's which results in a much stronger, smoother, wider power band. Sold pre-jetted or to customers jetting request. Please specify when ordering.

Carburetor	Order No.
39mm Pro-Series with 43mm Spigot O.D.	001-194
41mm Pro-Series with 47mm Spigot O.D.	001-196

For replacement parts, use the TM Flat Slide parts list on page 181-182.

TM Cable Type Starter System Kit

Replaces knob plunger type starter system with a cable type starter system. Sold as a kit. Two Kits available:

Order No. 002-351
Fits the following TM Carburetors: TM32, TM34, TM36, TM38 and 39mm Pro-Series, 41mm Pro-Series. Includes items A - F.

Order No. 002-353
Fits the following TM carburetor: VM28/418 (TM28)
Includes items A - F.

Replacement Parts. Sold each.

Description	Mikuni No.	Order No
A. Starter Plunger Top, Rubber Cap	VM26/46	002-061
B. Cable Adjuster	M21/14	002-062
C. Cable Adjuster Locknut	B30/247	002-065
D. Starter Plunger Fitting	VM15/37	002-093
E. Starter Plunger Spring	VM32/69	002-094
F. Starter Plunger (TM32-TM41)	VM15SC4/85	002-095
Starter Plunger (TM28)	VM15SC4/86	007-751

TM Series Throttle Valves

TM Flat Slide throttle valves. Sold each.
Note: Throttle Valve for TM36-68 no longer available.

Carburetor Size		Mikuni No.	Order No.
TM24 (TM24-8001)	3.0	832-30005	002-951
TM28 (VM28-418)	2.5	832-33001	002-804
TM32 (TM32-1)	4.0	832-39012	002-800
TM34 (TM34-2)	4.0	832-39012	002-800

Old Style TM 36, TM38 Carburetor with Top Idle Adjuster Rod TM36 (TM 36-2), TM38 (TM38-1, TM38 (TM38-3)

	2.5	832-43002	002-734
	3.0	832-43002	002-735
	4.0	832-43002	002-737
	5.0	832-43002	002-739

New Style TM 38 Carburetor, with Side Idle Adjuster Screw
TM38 (TM38-85), TM38 (TM38-86)

	2.5	832-43011	007-401
	3.0	832-43011	007-402
	3.5	832-43011	007-403
	4.0	832-43011	007-404
	4.5	832-43011	007-405
TM33 Pumper (TM33-8012)	1.5	832-38007	002-948
TM40 (HS40) Pumper (TM40-6)		TM40/81	007-430

TM Float Bowl

TM Flat Slide float bowl for TM38-85, TM38-86, TM39 Pro, and TM41 Pro series carburetors. **Drain plug not included**

Mikuni No	Part No.
TM38-138	007-767

MIKUNI TM Series Flat Slide Exploded View

Note: TM Flat Slide Standard Jetting Specifications, see page 90.

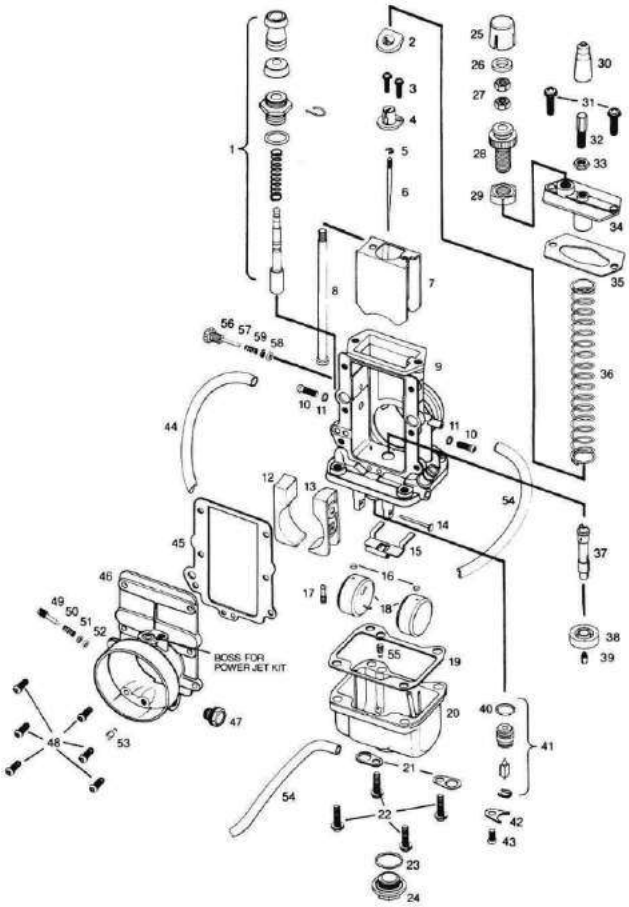

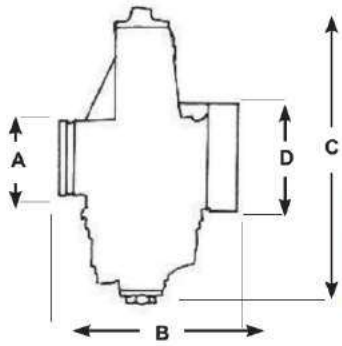

Float Height

See Page 178

Carburetor Dimensions

Size (mm)	A	B	C	D	Total Width
TM24-8001	31	75	145	44	76
VM28-418 (TM28)	33	82	135	44	76
TM32-1	40	83	160	58	78
TM34-2	40	83	160	58	78
TM36-2	43	100	170	62	75
TM38-85	47	100	170	62	75
TM38-86	43	100	170	62	75
TM39 Pro-Series	43	100	170	62	75
TM41 Pro-Series	47	100	170	62	75

TM Replacement Parts

• Lined through part numbers are no longer available.

No.	Description/Application	Mikuni No.	Order No.
1.	Fitting, Starter Plunger		
	TM24-8001	VM24/774	007-796
	VM28-418 (TM28)	VM26/116	002-815
	TM32-1, TM34-2, TM36-2, TM38-1	VM29/47	002-816
	TM38-3, TM38-85, TM38-86	VM29/47	002-816
	TM39 and TM41 Pro Series	VM29/47	002-816
2.	Nylon Ring		
	TM24-8001	VM24/791A	002-780
	TM28, TM32-34	VM28/1046	002-754
	TM36-2, TM38-1, TM38-3,	VM38/153	002-753
	TM38-85, TM38-86, TM39/41 Pro	VM38/153	002-753
3.	Screw with Lock Washer for Cable Connector		
	TM24-8001	CW2=2608	007-265
	VM28-418 (TM28), TM32-1, TM34-2,	CW2=0310	002-752
	TM36-2, TM38-1, TM38-3	CW2=0310	002-752
	TM38-85, TM38-86, TM39/TM41 Pro	CW2=0310	002-752
4.	Cable Connector		
	TM24-8001	VM24/790	002-758
	TM36-2, TM38-85, TM38-86	VM38/152	002-751
	TM39 and TM41 Pro Series	VM38/152	002-751
5.	E-Ring (Needle Clip) **All TM Series**	VM20/369	002-083
6.	Jet Needles		Pg.204
7.	Throttle Valves		Pg.179
8.	Idle Rod **(TM Carburetors with Top Idle Adjustment)**		
	TM36-2, TM38-1, TM38-3	VM38/159	002-732
9.	Mixing Chamber Body	———	———
10.	Screw, Jet Block **All TM Series**	VM38/132	002-742
11.	Washer **All TM Series**	VM34/274	002-741
12.	Jet Block, Left - TM38-1, TM38-3	VM38/144	002-710
13.	Jet Block, Right - TM38-1, TM38-3	VM38/145	002-711
14.	Float Pin **All TM Series**	BV26/22	002-107
15.	Float Arm		
	TM32-1, TM34-2, TM36-2,, TM38-1	VM36/15	002-112
	TM38-3, TM38-85, TM38-86	VM36/15	002-112
	TM39 and TM41 Pro Series	VM36/15	002-112
16.	Cap, Float Guide Pin		
	VM28-418 (TM28), TM32-1, TM34-2	VM26/42	002-718
	TM36-2, TM38-1, TM38-3	VM26/42	002-718
17.	Pilot Jet **All TM Series**	VM22/210	Pg.212
18.	Float		
	TM24-8001	VM24/365	007-255
	VM28-418 (TM28)	VM28/694	007-726
	TM32-1, TM34-2, TM36-2,, TM38-1	VM24/236	002-113
	TM38-3	VM24/236	002-113
	TM38-85, TM38-86, TM39/41 Pro **RH**	859-52020	002-481
	TM38-85, TM38-86, TM39/41 Pro **LH**	859-52021	002-482
19.	Gasket, Float Chamber		
	TM24-8001	VM20/492	007-250
	VM28-418 (TM28)	VM26/228	007-251
	TM32-1, TM34-2, TM36-2, TM38-1	VM34/374	002-700
	TM38-3, TM38-85, TM38-86	VM34/374	002-700
	TM39 and TM41 Pro Series	VM34/374	002-700
20.	Float Chamber (Bowl) Assembly		
	TM36-2, TM38-1, TM38-3	TM32/02-100	002-701
	TM38-85, TM38-86, TM39/41 Pro	TM38/138	007-767
21.	Plate, Hose Retaining		
	VM28-418 (TM28)	VM28/79A	002-204
	TM32-1, TM34-2, TM36-2, TM38-1	VM28/79A	002-204
	TM38-3, TM38-85, TM38-86	VM28/79A	002-204
	TM39 and TM41 Pro Series	VM28/79A	002-204
22.	Screw with Lock Washer		
	TM24-8001	CW2=0416-B	002-615
	VM28-418 (TM28)	CW2=0416	002-823
	TM32-1, TM34-2,	CW2=0516	002-373
	TM36-2, TM38-1, TM38-3	CW2=0518	002-719
	TM38-85, TM38-86, TM39/41 Pro	CW2=0518	002-719

TM Replacement Parts

No.	Description/Application	Mikuni No.	Order No.
23.	O-Ring		
	VM28-418 (TM28)	VM26/227	002-825
	TM32-1, TM34-2, TM36-2, TM38-1	VM28/254	002-531
	TM38-3, TM38-85, TM38-86	VM28/254	002-531
	TM39 and TM41 Pro Series	VM28/254	002-531
24.	Drain Plug		
	VM28-418 (TM28)	VM28/817	002-827
	TM32-1, TM34-2, TM36-2, TM38-1	VM28/253	002-526
	TM38-3, TM38-85, TM38-86	VM28/253	002-526
	TM39 and TM41 Pro Series	VM28/253	002-526
25.	Cap, Idle Adjuster		
	TM36-2, TM38-1, TM38-3	VM35/40	002-731
26.	Packing (Rubber)		
	TM36-2, TM38-1, TM38-3	N138.077	002-730
27.	Nut-TM36-2, TM38-1, TM38-3	N2=04	002-729
28.	Idle Adjuster-TM36-2, TM38-1, TM38-3	603-68001	002-728
29.	Nut-TM36-2, TM38-1, TM38-3	BDC36/35	002-727
30.	Rubber Cap	VM18/228	002-723
	TM24,VM28-418 (TM28)	VM26/46	002-061
	TM32-1, TM34-2, TM36-2	VM18/228	002-723
	TM38-1, TM38-3	VM18/228	002-723
	TM38-85, TM38-86	VM34/282	002-452
31.	Screw with Lock Washer **All TM Series**	CW2=0412	002-748
32.	Cable Adjuster		
	VM28-418 (TM28)	M18F/43A	002-062
	TM32-1, TM34-2, TM36-2, TM38-1	VM36/83	002-724
	TM38-3, TM38-85, TM38-86	VM36/83	002-724
	TM39 and TM41 Pro Series	VM36/83	002-724
33.	Locknut		
	VM28-418 (TM28)	B30/247	002-065
	TM32-1, TM34-2, TM36-2, TM38-1	B30/247	002-065
	TM38-3, TM38-85, TM38-86	B30/247	002-065
	TM39 and TM41 Pro Series	B30/247	002-065
34.	Mixing Chamber, Top		
	TM24-8001	VM24/785	007-765
	TM36-2, TM38-1, TM38-3	776-19002	002-733
	TM38-85, TM38-86, TM39/41 Pro	776-19001	———
35.	Gasket, Top		
	TM24-8001	VM24/785	007-765
	VM28-418 (TM28)	VM28/1045	002-830
	TM32-1, TM34-2,	VM32/495	007-268
	TM36-2, TM38-1, TM38-3	VM38/127	002-725
	TM38-85, TM38-86, TM39/41 Pro	VM38/127	002-725
36.	Spring, Throttle Valve		
	TM24-8001	730-11003	002-831
	VM28-418 (TM28)	730-15021	002-832
	TM32-1, TM34-2	730-15004	002-833
	TM36-2,, TM38-1, TM38-3,	730-16003	002-750
	TM38-85, TM38-86, TM39/TM41 Pro	730-16003	002-750
37.	Needle Jet **(See page 207 for Optional sizes)**		
	TM24-8001	#454 Series Q-0	
	VM28-418 (TM28)	#175 Series P-8	
	TM32-1, TM34-2, TM36-2	#389 Series Q-2	
	TM38-1, TM38-3	#389 Series Q-2	
	TM38-85, TM38-86, TM39/41 Pro	#389 Series Q-2	
38.	Ring, Main Jet		
	TM24-8001	VM28/449	002-664
	VM28-418 (TM28)	VM28/429	002-836
	TM32-1, TM34-2, TM36-2	VM34/454	002-837
	TM38-1, TM38-3	VM34/454	002-837
	TM38-85, TM38-86, TM39/41 Pro	TM34/36	002-835
39.	Main Jet **All TM Series**	4/042	Pg.214
40.	O-Ring, Needle Valve TM24-28	VM24/559	002-838
	O-Ring, Needle Valve TM32-41	KV10	002-709

No.	Description/Application	Mikuni No.	Order No.
41.	Needle Valve with KV10 O-Ring		
	(See Page 211 for Optional sizes)		
	TM24-8001 **Std**	VM24/557A-1.5	002-842
	VM28-418 (TM28) **Std**	VM24/557A-2.5	002-840
	TM32-1, TM34-2, TM36-2 **Std**	786-46001-3.3	002-705
	TM38-1, TM38-3 **Std**	786-46001-3.5	002-707
	TM38-85, TM38-86, TM39/41 Pro **Std**	786-46001-3.5	002-707
42.	Plate, Needle Valve **All TM Series**	VM24/560	002-721
43.	Screw **All TM Series**	C2=0406	002-722
44.	Vent Hose	VM14/49	002-755
45.	Gasket, Front Cover		
	TM24-8001, VM28-418 (TM28)	VM28/1044	002-847
	TM38-85, TM38-86, TM39/41 Pro	VM38/126	002-726
46.	Front Body, Air Intake	———	———
47.	Bolt, (Torx Head) TM38-1, TM38-3	BV15/27	———
48.	Screw **All TM Series**	VM38/133	002-749
49.	Air Screw, Pilot		
	TM24-8001, VM28-418 (TM28)	VM20/584	002-850
	TM32-1, TM34-2, TM36-2, TM38-1	VM24/672	007-768
	TM38-3, TM38-85, TM38-86	VM24/672	007-768
	TM39 and TM41 Pro Series	VM24/672	007-768
50.	Spring, Pilot Air Screw **All TM Series**	M12/46A	002-181
51.	Washer, Pilot Air Screw		
	TM32-1, TM34-2, TM36-2, TM38-1	VM12/33	002-856
	TM38-3, TM38-85, TM38-86	VM12/33	002-856
	TM39 and TM41 Pro Series	VM12/33	002-856
52.	O-Ring, Pilot Air Screw		
	TM32-1, TM34-2, TM36-2, TM38-1	N133.037	002-858
	TM38-3, TM38-85, TM38-86	N133.037	002-858
	TM39 and TM41 Pro Series	N133.037	002-858
53.	Main Air Jet	BS30/97	Pg.213
54.	Overflow Hose	VM14/49	002-755
55.	Starter Jet **All TM Series**	VM17/1002	Pg.213
56.	Idle Stop Screw		
	TM24-8001, VM28-418 (TM28)	603-27002	002-860
	TM32-1, TM34-2	603-16003	002-861
	TM38-85, TM38-86, TM39/41 Pro	603-16003	002-861
	TM39 and TM41 Pro Series	603-16003	002-861
57.	Spring, Idle Screw		
	TM24-8001, VM28-418 (TM28)	VM15/112	002-863
	TM32-1, TM34-2	VM24/556	002-864
	TM38-85, TM38-86, TM39/41 Pro	VM24/556	002-864
58.	O-Ring, Idle Screw		
	TM24-8001, VM28-418 (TM28)	VM14/75	002-676
	TM32-1, TM34-2	BV32/04	002-212
	TM38-85, TM38-86, TM39/41 Pro	BV32/04	002-212
59.	Washer		
	TM24-8001, VM28-418 (TM28)	VM14/87	002-866

Mikuni TM Series Carburetors are intended for off-road riding and racing use only. Not legal for use in California or other locations where similar pollution laws may apply.

MIKUNI TM33-8012 Pumper Carb Exploded View

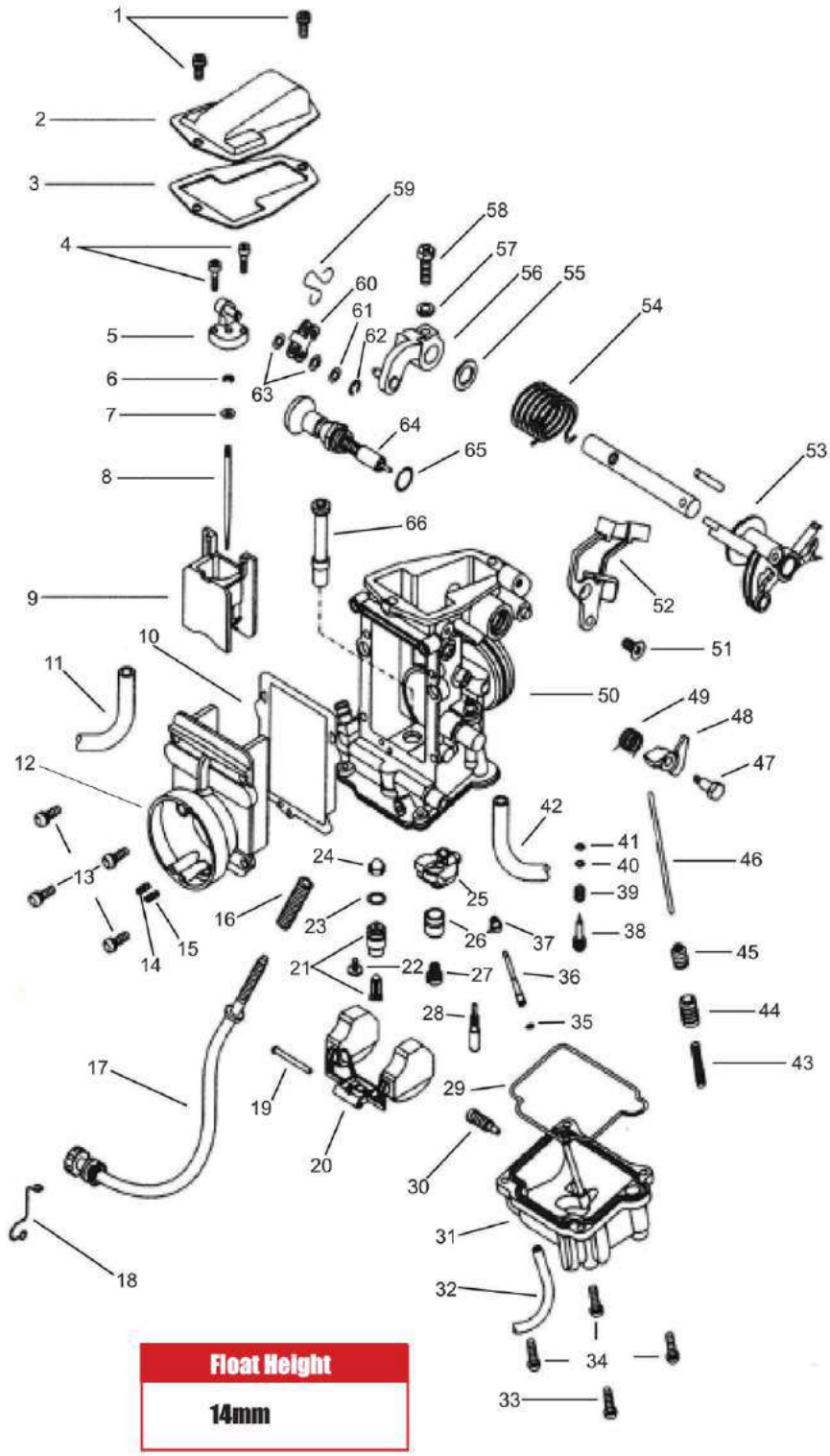

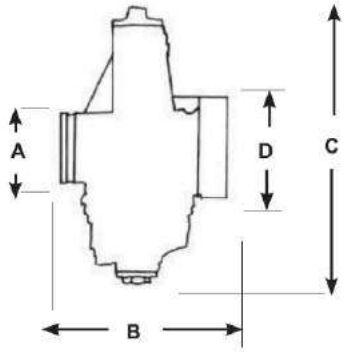

Float Height
14mm

Carburetor Dimensions

Size (mm)	A	B	C	D	Total Width
TM33-8012	40	93	160	50	105

Mikuni TM Series Carburetors are intended for off-road riding and racing use only. Not legal for use in California or other locations where similar pollution laws may apply.

TM33 Standard Jetting Specifications

Carburetor	Main Jet N100.604	Main Air Jet	Pilot Jet VM28/486	Pilot Air Jet	Needle Jet 640 Series	Jet Needle	Throttle Valve & Cutaway	Float Height	Mikuni No.	Order No.
TM33	#127.5	0.7	#37.5	1.1	#P-8	#5FP96	832-38007 #1.5	14mm	TM33-8012	001-032

TM33-8012 Pumper Carb Replacement Parts

• Lined through part numbers are no longer available.

No.	Description	Mikuni No.	Order No.
1.	Screw, Top Cover	CW2=0410	007-626
2.	Top Cover	TM29/16A	———
3.	Gasket, Top Cover	TM29/17	007-643
4.	Screw, Joint Assy.	793-13001	———
5.	Joint Assembly	TM29/71	———
6.	E-Ring	VM20/369	002-083
7.	Packing	VM26/315	007-124
8.	Jet Needle	J8-5FP96-3	007-004
9.	Throttle Valve 1.5	832-38007-1.5	002-948
10.	Gasket, Air Funnel	TM29/62	———
11.	Hose, Vent	VM34/105	———
12.	Air Funnel	TM33/32A	———
13.	Screw, Air Funnel	VM38/133	002-749
14.	Pilot Air Jet	BS30/97-1.1	Pg.213
15.	Main Air Jet	BS30/97-0.7	Pg.213
16.	Spring, Idle Adjuster	730-07008	007-602
17.	Idle Adjuster	TM33/38A	007-651
18.	Clip, Idle Adjuster	N189.169C	———
19.	Pin, Float	VM30/160	002-605
20.	Float Assembly	859-34003	007-606
21.	Needle Valve Assembly	N133.200-1.8	007-502
22.	Screw, N.V. Holder	VM13/216	007-174
23.	O-Ring, N.V. Assembly	KV/10	002-709
24.	Filter, Needle Valve Seat	VM18/233	002-606
25.	Ring, (nylon), Main Jet	TM33/35A	———
26.	Ring, (brass), Main Jet	VM38/106	———
27.	Main Jet #127.5	N100.604	Pg.214
28.	Pilot Jet #37.5	VM28/486	Pg.212
29.	O-Ring, Float Bowl	619-94012	007-508
30.	Drain Screw, Float Bowl	N133.363	007-509
31.	Float Bowl	TM33/77	———
32.	Hose, Overflow	888-23043-1F	———
33.	Screw (Long), Float Bowl	C2=0416	007-622
34.	Screw (Short), Float Bowl	C2=0414	007-621
35.	O-Ring, A/Pump Nozzle	N124.063	007-163
36.	Accelerator Pump Nozzle	TM29/24	007-510
37.	Plug, A/Pump Nozzle	TM29/14	007-164
38.	Pilot Screw	N138.192B	007-632
39.	Spring, Pilot Screw	N138.187	007-631
40.	Washer, Pilot Screw	VM12/33	002-856
41.	O-Ring, Pilot Screw	N133.037	002-858
42.	Hose, Vent	888-25029-1E	———
43.	Spring, A/Pump Plunger	730-04003A	002-867
44.	A/Pump Plunger	TM29/18	007-511
45.	Cap, A/Pump Rod	N150.048	007-512
46.	Rod, A/Pump	TM33/46	———
47.	Bolt, A/P Lever	B30/397	007-613
48.	Lever, A/P	VM38/212	007-683
49.	Spring, A/P Lever	TM33/47A	———
50.	Main Body	TM33SS90/01-0	———
51.	Screw, Throttle Bracket	C5=0510	———
52.	Bracket, Throttle	TM33/33	007-648
53.	Bell Crank	TM33/44	007-720
54.	Spring, Throttle Return	TM24/21	———
55.	Packing, Throttle Shaft	B36/95	007-615
56.	Lever, Throttle	VM13/186	———
57.	Washer, Throttle Lever	W4=05	002-679
58.	Bolt, Throttle Lever	VM28/230	002-519
59.	Spring, Linkage Lever	VM33/4C	002-631
60.	Plate, Linkage Lever	VM33/45	002-630
61.	Washer, Linkage Lever	M10/56	002-632
62.	E-Ring, Linkage Lever	BSW28/70	002-355
63.	Packing, Linkage Lever	B40I/10	002-629
64.	Choke Assy.	TM33/49	007-654
65.	O-Ring, Choke Assy.	N138.198	007-160
66.	Needle Jet - 640 Series	784-24111-P-8	Pg.207

TM33-8012 Needle Valve Assembly

Applications: TM33-8012 Pumper Carburetor and OEM Suzuki DR350 offroad (90-99) with Mikuni TM33 carburetor. Sold each.

Size	Mikuni No.	Order No.
1.5	N133.200-1.5	007-501
1.8	N133.200-1.8	007-502
2.0	N133.200-2.0	007-503
2.3	N133.200-2.3	007-504
O-Ring for Needle Valve Seat	KV/10	002-709
Filter Screen for Needle Valve Seat	VM18/233	002-606

TM33-8012 Carburetor Rebuild Kit

Kit includes GENUINE Mikuni parts to rebuild the TM33-8012 pumper carburetor. Sold as a kit.

Order No. 025-661

Photo courtesy of theriderskartel.com

MIKUNI TM36/TM40 (HS40) Pumper Carb Exploded View

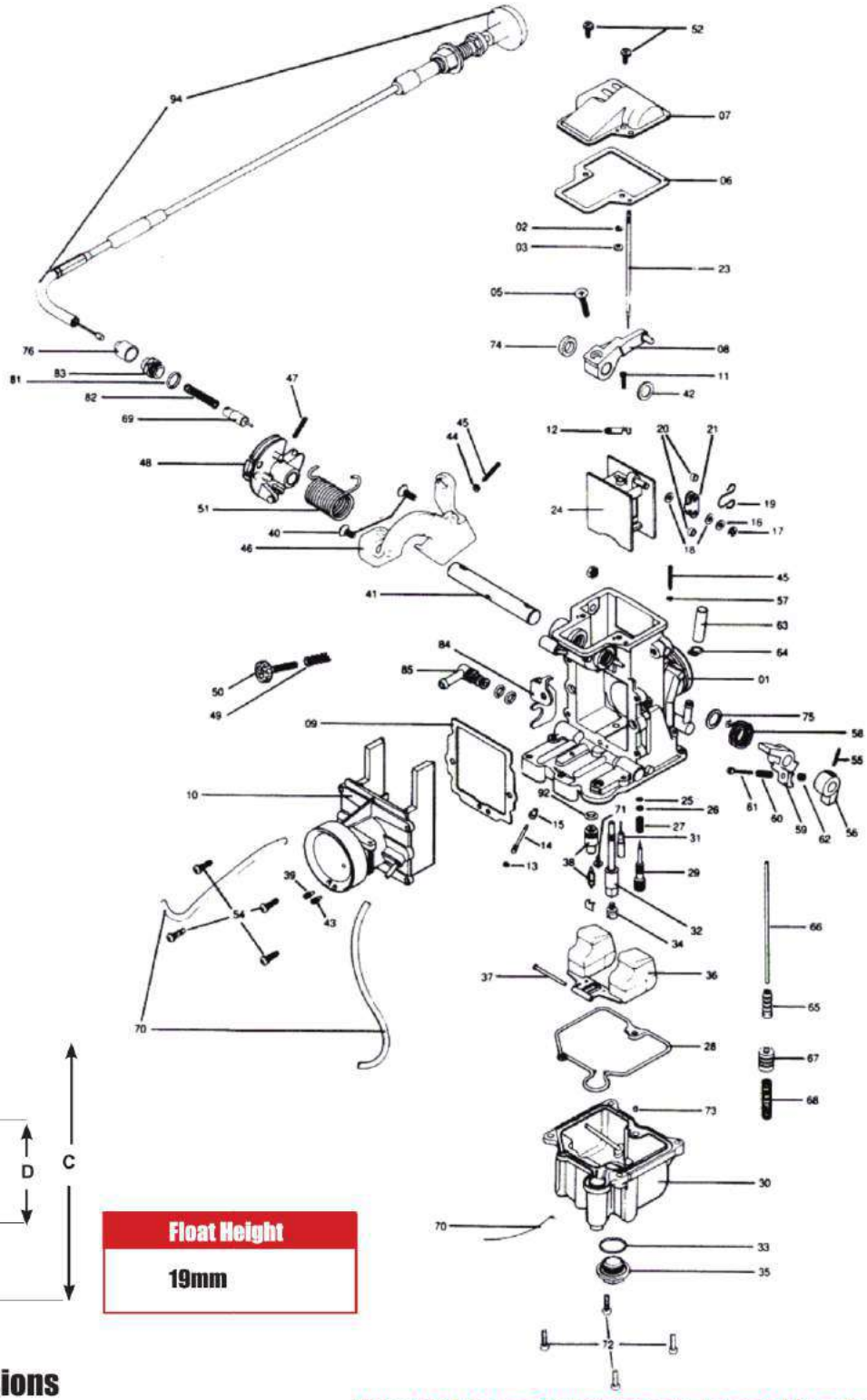

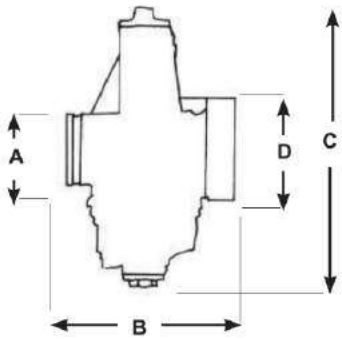

Float Height
19mm

Carburetor Dimensions

Size (mm)	A	B	C	D	Total Width
TM36-68	42	100	176	54	78
TM40-6/HS40	44	100	165	55	——

Mikuni TM Series Carburetors are intended for off-road riding and racing use only. Not legal for use in California or other locations where similar pollution laws may apply.

TM36 & TM40 (HS40) Standard Jetting Specifications

Carburetor	Main Jet	Main Air Jet	Pilot Jet	Pilot Air Jet	Needle Jet #568 Series	Jet Needle	Throttle Valve & Cutaway	Float Height	Mikuni No.	Order No.
TM36	N100.604 #130	None	VM28/486 #12.5	1.0	#P-8	9DZH6-50	TM36/137 #1.5	19mm	TM36-68	001-552
TM40 (HS40)	N100.604 #165	Plugged	VM28/486 #17.5	1.1	#Y-6	9DJY04-96	TM40/81	19mm	TM40-6	001-085

MIKUNI TM36/TM40 (HS40) Pumper Carb Parts

TM36/TM40 (HS40) Replacement Parts

• Lined through part numbers are no longer available.

Mikuni Part No. Highlighted in BOLD RED are included in rebuild kit.

No.	Description	Mikuni No.	Order No.
1.	Mixing Body	TM4055/01	———
2.	E-Ring	**BS32/126**	002-455
3.	Washer	**826-03002**	007-267
4.	Allen Screw	739-13001	007-123
5.	Flat Head Screw 5x14mm	C5-0514	007-625
6.	Gasket	**TM36/39**	007-119
7.	Top Cover	TM36/59	———
8.	Lever Assembly	TM36/57	———
9.	Gasket, Funnel	TM36/42	007-658
10.	Funnel	TM40/03	———
11.	Screw, Throttle Valve Plate	C2=0310	———
12.	Plate, Throttle Valve Lever	TM36/12	———
13.	O-Ring, Nozzle	**N124.063**	007-163
14.	Pump Nozzle standard on TM36	TM36/43-03	007-165
	Optional	TM36/43-05	007-166
	Pump Nozzle standard on TM40/HS40	TM36/43-08	007-167
15.	Plug, Nozzle	**TM29/14**	007-164
16.	Washer	M10/56	002-632
17.	E-Ring	BSW20/70	002-355
18.	Packing	B401/10	002-629
19.	Clip, Throttle Valve Lever	TM27/05A	007-641
20.	Ring, Throttle Valve Lever	TM29/65	———
21.	Plate, Throttle Valve Lever	TM27/04	———
23.	Jet Needle **(TM40)**	9DJY04-96	007-018
	Jet Needle **(TM36)**	9DZH6-50	007-109
24.	Throttle Valve	TM40/81	007-430
25.	O-Ring	**N133.037**	002-858
26.	Washer	**VM12/33**	002-856
27.	Spring	**N133.206**	007-137
28.	O-Ring, Float Bowl	**619-94021**	007-197
29.	Screw, Pilot Fuel	**604-26003**	007-138
30.	Float Chamber Body	TM40/12	———
31.	Pilot Jet	VM28/486	Pg.212
32.	568 Series, See Pg.207 for *optional sizes - HS40, TM36, TM40.		
	Needle Jet (HS40) 568 Series Std.	784-13002-Y6	003-666
	Needle Jet (TM36) 568 Series Std.	784-13002-P8	003-656
	Needle Jet (TM40) 568 Series Std.	784-13002-P8	003-656
33.	O-Ring	**VM28/254**	002-531
34.	Main Jet	N100.604	Pg.214
35.	Drain Plug (TM40) Short	TM32/41	007-646
35B.	Drain Plug (TM36) Long	TM32/41-1C	007-712
36.	Float Assembly	T859-32011	007-141
37.	Pin, Float	VM30/160	002-605
38.	Needle Valve Assembly **(TM36)**	786-36011-3.3	007-505
38A.	Needle Valve Assembly **(TM40)**	**990-786-044-3.8**	002-877
39.	Main Air Jet (Plugged)	**BS30/97**	002-149
40.	Screw 5X12mm	C5-0512-B	———
41.	Shaft, Throttle	700-15004	———
42.	Packing, Shaft	———	———
43.	Pilot Air Jet	BS30/97	Pg.213
44.	Hexagon Nut	N2=03-B	007-194
45.	Adjust Screw	TM36/48	007-168
46.	Bracket, Bell Crank	TM40/14	———
47.	Pin, Throttle Bell Crank	N138.019	007-171
48.	Lever Assembly, Bell Crank	TM40/23	007-665
49.	Spring, Idle Adjust **(side idle only)**	N150.025	007-633
	Spring, Idle Adjust **(top idle only)**	BN38/341	007-491
50.	Idle Adjust **(side idle only)**	TM40/91	007-495
	Idle Adjust **(top idle only)**	739-55003	007-490
51.	Spring, Throttle Return	TM36/46A	007-204
52.	Screw, Top Cover	CW2-0408	007-175
54.	Screw, Air Funnel	VM38/133	———
55.	Pin, A/P Locate	BN38/43	007-617
56.	Lever, A/Pump	TM36/18	007-189
57.	O-Ring	B30/205	007-188
58.	Spring, A/Pump	TM40/33	007-668
59.	Lever, A/Pump	TM36/17	007-292
60.	Spring, A/P Adjust	M12F/46A	002-181
61.	Screw, A/P Adjust	MC-0316	007-193
62.	Hexagon Nut	N3-03-B	007-194
63.	Cap, Vacuum Fitting	N148.013	002-646
64.	Spring Clip, Vacuum Fitting	BVK28/128	———
65.	Cap, A/P Rubber	**TM36/64**	007-195
66.	Rod, A/Pump	TM36/44	007-192
67.	Plunger	TM36/60	007-198
68.	Spring, A/Pump	VM14SC13/89	007-200
69.	Plunger, Starter	VM38/148	007-203
70.	Hose	**888-23026**	007-608
71.	Screw, Needle Valve Holder	VM13/216	007-174
72.	Screw, Float Bowl	**C2-0412-B**	007-201
73.	Starter Jet	VM17/1002	Pg.213
74.	Packing, Shaft	VM28/174	———
75.	Ring, A/P Spring	E204040	007-628
76.	Cap, Starter Cable	VM12/43	007-676
81.	O-Ring	**N138.198**	007-160
82.	Spring Starter	VM16/42	002-671
83.	Guide Holder	640-12001	007-161
84.	Plate, Fuel Inlet	TM40/26	———
85.	Inlet, Fuel	TM40/27	007-667
92.	O-Ring, Needle Valve	**KV/10**	002-709
94.	Choke Cable Assembly	990-662-001	007-209
94B.	Choke Knob	TM40/07	007-684

TM36/TM40 (HS40) Carburetor Rebuild Kits

Kits contain GENUINE Mikuni parts, all the necessary parts and gaskets to rebuild the TM36/TM40 (HS40) carburetor. Includes needle valve assembly, o-rings, gaskets and screws. Sold as a kit.

Mikuni No.	Description	Order No
	with 3.3 Needle Vlv. Assy. TM36	007-940
KHS-001	with 3.8 Needle Vlv. Assy. TM40 (HS40)	002-985

Exploded View No.	Qt	Contents
2	1	E-Ring, Jet Needle
3	1	Washer, Jet Needle
6	1	Gasket, Top Cover
13	1	O-Ring, A/P Nozzle
15	1	Plug, A/P Nozzle
25	1	O-Ring, Fuel Screw
26	1	Washer, Fuel Screw
27	1	Spring, Fuel Screw
28	1	O-Ring, Float Bowl
29	1	Screw, Pilot Fuel
33	1	O-Ring, Drain Plug
38	1	Needle Valve Assy #3.3 (TM36)
38A		Needle Valve Assy #3.8 (HS40/TM40)
39	1	Main Air Jet (Plugged)
65	1	Cap, A/P Rubber
70	1	Hose
72	4	Screw, Float Bowl
81	1	O-Ring, Starter
92	1	O-Ring, Needle Valve

See next page for TM36/TM40 (HS40) Parts & Accessories

MIKUNI TM36/TM40 (HS40) Parts & Accessories

TM40 (HS40) Rubber Flange Adapters Sold each.

Genuine Mikuni rubber flange adapters for Evolution or Sportster/ Shovelhead Kit.

Description	Mikuni No.	Order No.
HS40-6K	I-VM36-200-1	002-054
HS40-7K	I-VM38-200-1	002-055
HS40 All	KHS-004	002-986

TM40 (HS40) K&N Air Filters

The replacement air filters for the HS Series are K&N Air Filters made especially for the HS Series Carburetors.

Description	Mikuni No.	Order No.
Chrome Air Cleaner Cover	RS36/24-200	007-215
Replacement Element Only	RS36/25-200	007-216

HS40 CARB ADAPTER FOR 1990 H-D® MODELS with Standard Carb/Spigot Adapter Rings

To fit HS40-6K Evolution Carb Kit to 1990-on Harley Davidson® models equipped with the Keihin 40mm CV carb. Sold each.

Description	Mikuni No.	Order No.
EVO Adapter Ring	MK-413	005-095

TM40 (HS40) Throttle Cables Sold each.

Replacement cables for HS Series Kits Sold each.

Description	Mikuni No.	Order No.
Throttle Cable (Pull)	RS36/34-A	007-210
Idle Cable (Push)	RS36/35-A	007-211
(Cables available in +6" and 4" shorter)		

Jet Needles TM36

No.23 in exploded view on page 184, Parts list page 185.

Mikuni No.	Diameter		Order No.
#9DZH06-50 **(Std)**			007-109
#9EBY01-51	2.51	Leaner	007-106
#9EBY01-50	2.50	Richer	007-105

When using these Jet Needles **007-105** & **007-106**, the use of a larger pilot jet may be required.

Jet Needles TM40 (HS40)

No.23 in exploded view on page 184, Parts list page 185.

Mikuni No.	Diameter	Order No.	
#9DJY01	2.97	Leaner	007-015
#9DJY03/ 9DJY04 **(Std)**	2.96	↕	007-017
#9DJY02	2.95	Richer	007-016

Early Style TMX

Mikuni TMX Carburetors

The TMX series (early) carburetors feature a flat slide design in a smooth bore venturi to provide improved throttle response and wider power band. Later series (late) TMX feature a flat/oval type slide. Light weight and compact body. TMX series carburetors are available in 35mm bore size for 125cc race engines and 38mm bore sizes for 250cc race engines.

Special Set TMX Flat Slide Carburetors

Use the following part numbers when ordering for special jetting request.

Carburetor	Mikuni Reference	Jetting Change
TMX35	TMX35-1	001-182
TMX38	TMX38-18	001-189
TMX38	TMX38-27	001-184

TMX Flat Slide Carburetors (Early Style) Standard Jetting

Carburetor	Main Jet	Pilot Jet	Jet Needle	Throttle Valve Cutaway	Needle Valve Set	Float Height	Mikuni No.	Order No.
TMX35-1	4/042 #350	VM22/210 #20	6EN11-53	999-832-014-6.0	786-36004-3.5	20mm	TMX35-1	001-034
TMX38-18	4/042 #370	VM22/210 #20	6EJ12-55	999-832-014-3.5	786-36004-3.5	20mm	TMX38-18	001-076
TMX38-27	4/042 #370	VM22/210 #20	6EJ12-55	999-832-014-3.5	786-36004-3.5	20mm	TMX38-27	001-077

Photo courtesy of 4TheRiders

TMX Series Throttle Valves (Early Style)

Throttle valves or TMX35 and TMX38. Sold each.

Cutaway	Mikuni No.	Order No.
3.0	999-832-014-3.0	002-472
3.5	999-832-014-3.5	002-473
4.0	999-832-014-4.0	002-476
5.0	999-832-014-5.0	002-474
6.0	999-832-014-6.0	002-475

TMS Throttle Valves

Applications: TMS. Sold each.

Engine	Inlet Hole	Outlet Hole	Mikuni No.	Order No.
250cc	3.0mm	2.0mm	999-832-017 "1G"	007-410
125cc	2.0mm	1.4mm	999-832-017 "1H"	007-411

MIKUNI TMS/TMX Series (Early Style) Exploded View

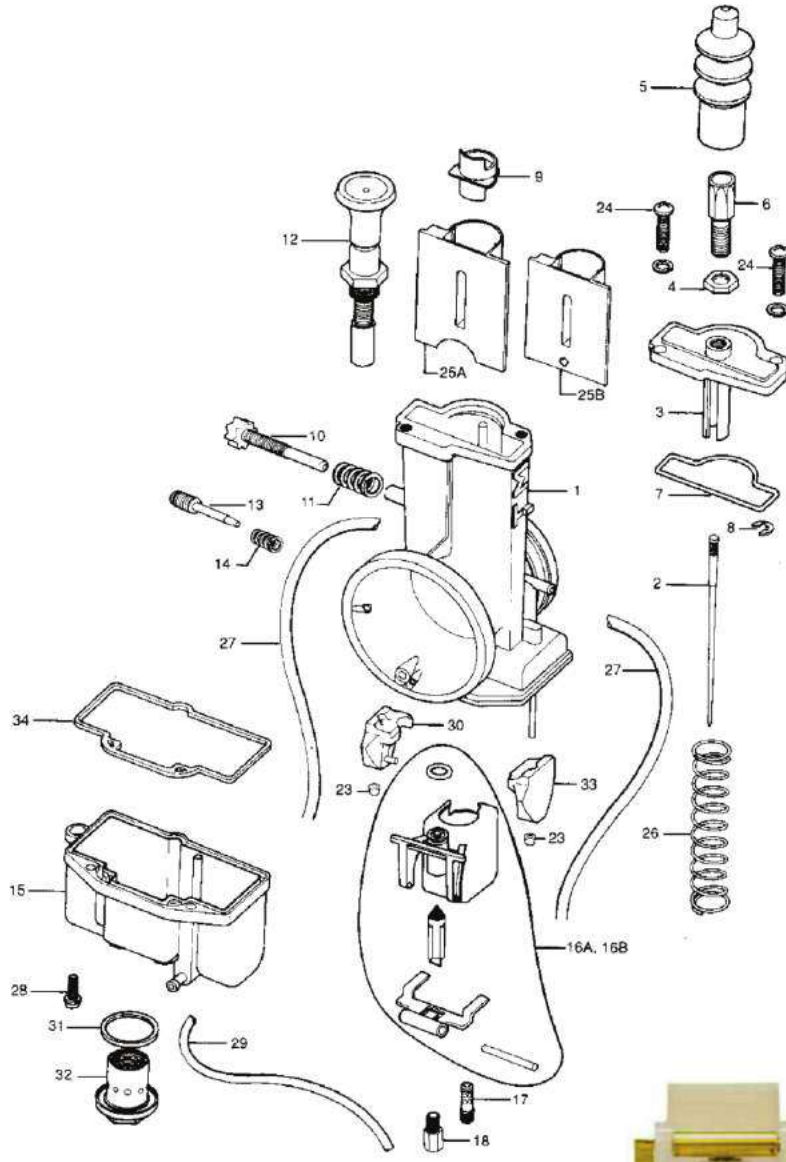

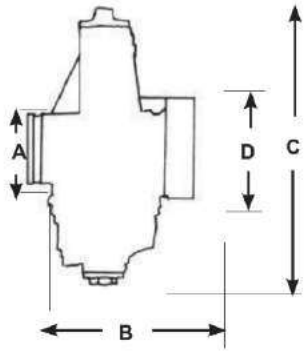

Float Height
20mm

16A) 002-466 (3.5), 16B) 002-464 (1.8)

Carburetor Dimensions

Size (mm)	A	B	C	D	Total Width
TMX35-1	40	76	164	62	76
TMX38-18	47	76	164	62	76
TMX38-27	44	76	164	62	76
TMS38-77	44	76	164	62	76
TMS38-78	47	76	164	62	76

Note: TMS carburetor is no longer in production.

Mikuni TMX Series Carburetors are intended for off-road riding and racing use only. Not legal for use in California or other locations where similar pollution laws may apply.

TMX Flat Slide Carburetors (Early Style) Standard Jetting

Carburetor	Main Jet	Pilot Jet	Jet Needle	Throttle Valve Cutaway	Needle Valve Set	Float Height	Mikuni No.	Order No.
TMX35-1	4/042 #350	VM22/210 #20	6EN11-53	9998-832-014-6.0	786-36004-3.5	20mm	TMX35-1	001-034
TMX38-18	4/042 #370	VM22/210 #20	6EJ12-55	9998-832-014-3.5	786-36004-3.5	20mm	TMX38-18	001-076
TMX38-27	4/042 #370	VM22/210 #20	6EJ12-55	9998-832-014-3.5	786-36004-3.5	20mm	TMX38-27	001-077

TMS/TMX Early Style Replacement Parts

• Lined through part numbers are no longer available.
Mikuni Part No. Highlighted in BOLD RED are included in rebuild kit.
Note: TMS carburetor is no longer in production.

No.	Description	Mikuni No.	Order No.
1.	Mixing Body, Carb	TMS38SS11	———
2.	Jet Needle. See chart at bottom of page.		
	Jet Needle (TMX35)	6EN11	See Chart
	Jet Needle (TMX38)	6EJ12	See Chart
	Jet Needle (TMS38) for 125cc	6GDY12	See Chart
	Jet Needle (TMS38) for 250cc	6DGY04	See Chart
3.	Cover, Carb Top	776-19014	002-451
4.	Lock Nut, Adjuster	B30/247	002-065
5.	Cap, Rubber	**VM34/282**	002-452
6.	Adjuster, Cable	VM30/77	002-453
7.	O-Ring, Top Cover	**616-93009**	002-454
8.	E-Ring, Needle Clip	**BS32/126**	002-455
9.	Ring, Retaining	**TM38/54**	002-456
10.	Adjuster, Idle Stop	603-25008	002-457
11.	Spring, Idle Adjust	N110.209	002-655
12.	Plunger, Starter Assy.	VM29/47	002-816
13.	Screw, Air Adjuster	**603-36002**	002-459
14.	Spring, Air Screw	**VM15/112**	002-863
15.	Chamber, Float Bowl	TM38/48	002-461
16A.	Valve Seat, Needle Assembly.	**786-36004 (3.5)**	002-466
16B.	Valve Seat, Needle Assembly.	**786-36004-A (1.8)**	002-464
17.	Pilot Jet	VM22/210	Pg.212
18.	Main Jet	4/042	Pg.214
23.	Cap, Float Retainer	**VM26/42**	002-718
24.	Screw, Top Cover 4 x 12mm	**CW2=0412**	002-748
25A.	Throttle Valve **TMX** (see chart)	999-832-014	Pg.187
25B.	Throttle Valve **TMS** (see chart)	999-832-017	Pg.187
26.	Spring, Throttle Valve	730-13019	002-477
27.	Hose, Vent (Black)	888-24011	002-478
28.	Screw, Float Bowl 3 x 8mm	**CW2=308**	002-479
29.	Hose, Overflow	888-23022	002-480
30.	Float, Left Side	859-52021	002-482
31.	O-Ring, Drain Plug	**BN042/64**	002-602
32.	Drain Plug	TM38/44	002-483
33.	Float, Right Side	859-52020	002-481
34.	Gasket, Float Bowl	**TM38/52**	002-484
	***Not shown in exploded view.**		
	*Needle Valve only	788-26005	002-469

TMS/TMX Early Style Carburetor Rebuild Kit

Applications: TMS38, early style TMX35, TMX38. Kit includes GENUINE Mikuni parts to rebuild the TMS and early style TMX Carburetors. Sold as a kit. Two kits available:

With **3.5** Needle Assembly Valve Seat.	007-950
With **1.8** Needle Assembly Valve Seat.	007-951

Exploded View No.	Qt	Contents
5.	1	Cap, Rubber
7.	1	O-Ring, Top Cover
8.	1	E-Ring, Needle Clip
9.	1	Ring, Retaining
13.	1	Screw, Idle Adjuster
14.	1	Spring, Air Screw
16A.	1	Valve Seat, Needle Assembly. (in Rebuild Kit 007-950)
16B.	1	Valve Seat, Needle Assembly (in Rebuild Kit 007-951)
23.	2	Cap, Float Retainer
24.	2	Screw, Top Cover 4 x12mm
28.	1	Screw, Float Bowl 3 x 8mm
31.	1	O-Ring, Drain Plug
34.	1	Gasket, Float Bow

TMX Series Jet Needles

Jet Needles for early style TMX35 and TMX38. Sold each.

Application	Jet Needle	Jet Needle Diameter	Order No.	Air/Fuel Ratio
TMX35	6EN11-58	2.58	007-056	Leaner
TMX35	6EN11-57	2.57	007-055	↑
TMX35	6EN11-56	2.56	007-054	
TMX35	6EN11-55	2.55	007-053	
TMX35	6EN11-54	2.54	007-052	
TMX35	6EN11-53	2.53	007-051	↓
TMX35	6EN11-52	2.52	007-050	Richer
TMX38	6EJ12-60	2.60	007-077	Leaner
TMX38	6EJ12-59	2.59	007-076	↑
TMX38	6EJ12-58	2.58	007-075	
TMX38	6EJ12-57	2.57	007-074	
TMX38	6EJ12-56	2.56	007-073	
TMX38	6EJ12-55	2.55	007-072	
TMX38	6EJ12-54	2.54	007-071	↓
TMX38	6EJ12-53	2.53	007-070	Richer

TMS Series Jet Needles

Jet Needles for early style TMS38. Sold each.

Application	Jet Needle	Jet Needle Diameter	Order No.	Air/Fuel Ratio
TMS38-77, 78 125cc	6GDY12-59	2.59	007-088	Leaner
TMS38-77, 78 125cc	6GDY12-58	2.58	007-087	↑
TMS38-77, 78 125cc	6GDY12-57	2.57	007-086	↓
TMS38-77, 78 125cc	6GDY12-56	2.56	007-085	Richer
TMS38-77, 78 250cc	6DGY04-60	2.60	007-048	Leaner
TMS38-77, 78 250cc	6DGY04-59	2.59	007-047	↑
TMS38-77, 78 250cc	6DGY04-58	2.58	007-046	
TMS38-77, 78 250cc	6DGY04-57	2.57	007-045	
TMS38-77, 78 250cc	6DGY04-56	2.56	007-044	
TMS38-77, 78 250cc	6DGY04-55	2.55	007-043	↓
TMS38-77, 78 250cc	6DGY04-54	2.54	007-042	Richer

MIKUNI TMX Series (Late Style) Exploded View

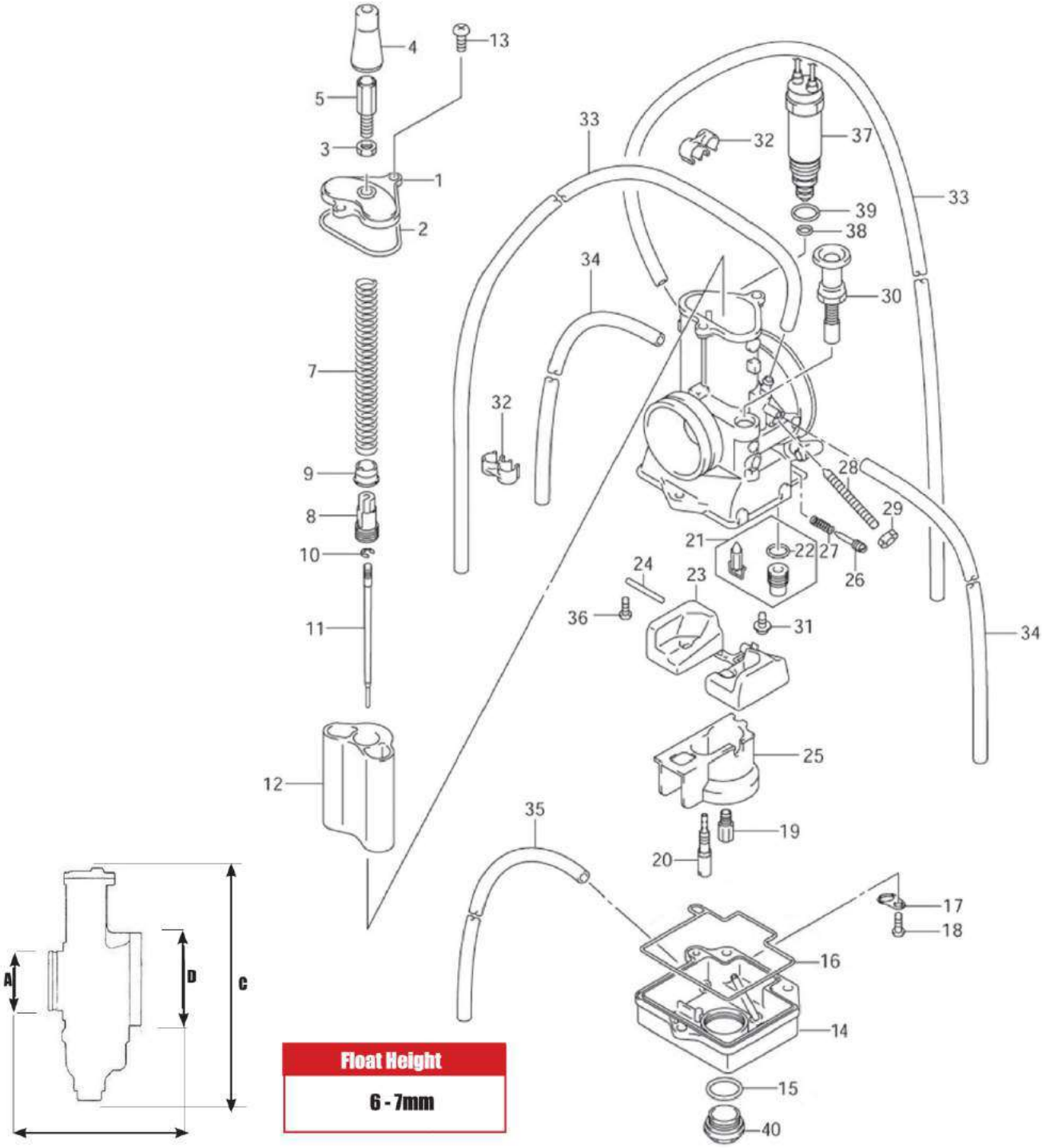

Float Height
6 - 7mm

Carburetor Dimensions

Size (mm)	A	B	C	D	Total Width
TMX38-2	46	75	152.5	62	86
TMX38-5	46	70	152.5	62	86

Mikuni TMX Series Carburetors are intended for off-road riding and racing use only. Not legal for use in California or other locations where similar pollution laws may apply.

TMX Oval Slide Carburetors (Late Style) Standard Jetting

Carb Size	Main Jet	Pilot Jet	Needle Jet	Jet Needle	Throttle Valve Cutaway	Needle Valve Set	Float Height	Mikuni No.	Order No
TMX38	4/042 #310	N224.103 #20	6BEG18-68	832-42016-5.0	832-42016	786-36011-3.8	6-7mm	TMX38-2	———
TMX38	4/042 #640	N224.103 #30	6BEG2-60	832-42016-5.0	832-42016	786-26004-1.5	6-7mm	TMX38-5	———

TMX Later Style Replacement Parts

• Lined through part numbers are not available.

No.	Description	Mikuni No.	Order No. TMX38-2	Order No. TMX38-5
1.	Cover, Carb Top	776-19043	———	———
	Cover, Carb Top	TMR38/18	———	———
2.	O-Ring, Top Cap	616-93055	007-754	007-754
3.	Lock Nut, Adjuster	B30/247	002-065	002-065
4.	Rubber Cap	VM34/282	002-452	———
	Rubber Cap	30BIC/84	———	———
5.	Adjuster Screw (Cable)	VM30/77	002-453	———
	Adjuster Screw (Cable)	VM20/683	———	———
6.	Needle Jet (not shown)	press fit - N/A	———	———
	Needle Jet	784-13005 (633 Series)	———	———
7.	Spring, Throttle Valve	730-12040	———	———
8.	Needle Retainer	TMR36/01	———	———
9.	Guide	TMR38/33	———	———
10.	E-Ring	TM32/90	———	———
11.	Jet Needle	6BEG18-68-3	———	———
	Jet Needle	6EG2-60-3	———	———
12.	Throttle Valve (oval type)	832-42016-XX	———	———
13.	Screw 4 x 14mm	C2=0414	007-621	007-621
14.	Float Bowl	TMR38/11-1A	———	———
	Float Bowl	TMR38/11-1C	———	———
15.	O-Ring, Drain Plug	VM26/227	002-825	002-825
16.	Gasket, Float Bowl	616-93054	007-753	007-753
	Gasket, Float Bowl	616-93057	———	———
17.	Clamp Plate for Float Bowl Vent Hose	———	———	———
18.	Screw only 5 x 14mm	C2=0514	———	———
19.	Main Jet	4/042	Pg.214	Pg.214
20.	Pilot Jet	N224.103	Pg.213	Pg.213
21.	Needle Valve Assembly	786-36011-(3.8)	002-877	———
		786-26004-(1.5)	———	———
22.	O-Ring, Needle Valve Assy	KV/10	002-709	002-709
23.	Float	859-32035	———	———
	Float	859-32039	———	———
24.	Float Pin	VM20/315	002-470	002-470
25.	Ring, Main Jet	TMR38/09	———	———
26.	Screw, Air Adjuster	603-36002	002-459	002-459
27.	Spring, Air Screw	VM15/112	002-863	002-863
28.	Screw, Idle Stop	TMR36/09	———	———
29.	Nut, Idle Stop Screw	N138050	———	———
30.	Choke Assy	VM29/47	002-816(see 30A-30F)	
30A.	Plunger	VM15SC4/85	———	002-095
30B.	Spring	VM16/42	———	———
30C.	Starter Plunger Fitting	M15/37	———	002-093
30D.	Rubber Cap	30BIC/84	———	———
30E.	Adjust Screw	M21/14	———	———
30F.	Nut	B30/247	———	002-065
31.	Screw, Needle Valve Holder	VM13/216	007-174	007-174
32.	Clamp,Vent Hose	———	———	———
33.	Hose, Vent	888-23041	———	———
	Hose, Vent	888-23045-37	———	———
34.	Hose, Vent	888-23041	———	———
35.	Hose, Float Bowl Overflow	VM20/594	———	———
36.	Screw only, 4 x 8mm	C2=0408	———	———
37.	Solenoid	TM38/87-1A	———	———
38.	O-Ring, Solenoid	BV32/04	002-212	002-212
39.	O-Ring, Solenoid	BV30/40	002-617	002-617
40.	Drain Plug	894-80001	———	———

Honda OEM TMX Throttle Valve

Flat throttle valve for Honda CR250R (01-03). Fits Honda OEM TMX38 carburetor only. Sold each.

Cutaway	Mikuni No.	Order No.
5.0.	832-41018-5.0	007-415

Honda OEM 633 Series Nozzle (Needle Jet)

Nozzles for Honda CR125R (00-01), CR250R (2001).
Optional for Kawasaki KX125L3. Sold each.

Size	Mikuni No.	Order No.	
S-4	784-13005	003-720	Leaner
S-7	784-13005	003-722	
S-8	784-13005	003-723	
S-9	784-13005	003-724	Richer

OEM Needle Valve Assembly

Includes needle valve, clip, seat and o-ring. OEM Replacement for models using late style Mikuni TMX36 and TMX38 carburetors. Sold each.

Mfg.	Model	Year	OEM Reference & Size	Order No.
Honda	CR125R	01-07	16011-KZ4-A92 (3.8)	002-877
Husqvarna	CR125 w/TMX	———	———	002-877
Kawasaki	KX125	01-05	16030-1096 (3.8)	002-877
Suzuki	RM125	00-07	13370-36F00 (3.3)	007-954
Yamaha	YZ125	95-13	4PE-14107-38-00 (3.8)	002-877

MIKUNI VM Roundslide Carburetors

VM Series Round Slide Single Carburetors

These are the most popular high performance singles carburetor in the sport of motorcycling. Mikuni's VM series round slide single Carburetors have proven themselves as the performance standard for use in any single cylinder motorcycle or ATV applications for motocross, Enduro and trail riding, to flat track racing and road racing on both 2-stroke and 4-stroke engines.

Performance features for the VM Series Carburetors include a large selection of bore sizes for increased fuel mixture flow to match engine modifications. The VM Series offers a wide range of tuning components to allow precise fuel mixture metering in any application, at any throttle setting, under any riding condition. VM Series Carburetors are sold pre-jetted. (See Standard Jetting Specifications below)
Special Jetting also available, see next page.

Please Note: Changes and jetting modifications are for use only on racing machines or similar off-road vehicles where pollution laws are not in effect. Not legal for vehicles operated on public highways in the State of California or other areas where similar pollution laws may apply.

"Left" Idle Screw Standard Jetting Specifications

Carb Size	Main Jet	Pilot Jet	Needle Jet	Jet Needle	Throttle Valve Cutaway	Air Jet	Needle Valve Set	Float Height	Mikuni No.	Order No.
VM16	N100.604 #70	VM22/210 #25	#165 D-8	#3DJ3	2.5	None	VM15/172-1.8	24-26mm	VM16-519	001-000
VM18	4/042 #80	VM22/210 #30	#145 O-0	#4F18	VM18/158 1.0	None	VM15/172-1.5	20-22mm	VM18-144	001-001
VM20	4/042 #180	M28/1001 #22.5	#239 O-6	#4J13	VM20/491 2.0	0.5 Fixed	VM15/172-1.5	20-22mm	VM20-273	001-005
VM22	4/042 #100	VM22/210 #30	#257 N-8	#4D20	VM26/21 2.0	None	VM26/26-2.0	24-26mm	VM22-133	001-007
VM26	4/042 #190	VM22/210 #60	#182 N-8	#5F21	VM28/56 2.0	BS30/97 0.5	VM26/26-2.5	15-17mm	VM26-8074	001-020
VM26	4/042 #190	M28/1001 #22.5	#332 0-0	#5E75	VM24/361 1.5	Fixed	VM26/26-2.5	22-24mm	VM26-606	001-021
VM28	4/042 #200	VM22/210 #60	#169 N-8	#5F21	VM28/56 2.5	BS30/97 0.5	VM26/26-2.5	22-24mm	VM28-49	001-022
VM30	4/042 #250	VM22/210 #40	#159 P-5	#6F5	VM34/110 2.5	BS30/97 2.0	VM34/39-3.3	22-24mm	VM30-83	001-024
VM32	4/042 #200	VM22/210 #35	#159 Q-6	#6DP17	VM34/110 3.0	BS30/97 2.0	VM34/39-3.3	22-24mm	VM32-33	001-028
VM34	4/042 #260	VM22/210 #35	#159 Q-2	#6DH4	VM34/110 2.5	BS30/97 2.0	VM34/39-3.3	22-24mm	VM34-168	001-030
VM36	4/042 #310	VM22/210 #35	#159 Q-5	#6FJ6	VM36/36-2.5	BS30/97 2.0	VM34/39-3.3	17-19mm	VM36-4	001-035
VM44	4/042 #310	VM22/210 #35	#224 AA-5	#7F7	VM44/23-2.5	BS30/97 0.5	VM34/39-3.3	17-19mm	VM44-3	001-048

"Right" Idle Screw Standard Jetting Specifications

Carb Size	Main Jet	Pilot Jet	Needle Jet	Jet Needle	Throttle Valve Cutaway	Air Jet	Needle Valve Set	Float Height	Mikuni No.	Order No.
VM24	4/042 #210	VM22/210 #40	#864 N-8	#5I14	1.5	None	786-15005-2.5		VM24-512	001-018
VM32	4/042 #200	VM22/210 #35	#159 Q-6	#6DP17	VM32/65 3.0	BS30/97 2.0	VM34/39-3.3	22-24mm	VM32-193	001-051
VM34	4/042 #260	VM22/210 #35	#159 Q-2	#6DH4	VM32/65 2.5	BS30/97 2.0	VM34/39-3.3	22-24mm	VM34-275	001-052
VM38	4/042 #330	VM22/210 #30	#166 Q-2	#6DP1	VM38/24 2.5	BS30/97 0.5	VM34/39-3.3	17-19mm	VM38-9	001-040

Snowmobile Single Carburetor Standard Jetting Specifications

Carb Size	Main Jet	Pilot Jet	Needle Jet	Jet Needle	Throttle Valve Cutaway	Air Jet	Needle Valve Set	Float Height	Mikuni No.	Order No.
VM34	4/042 #330	VM22/210 #30	#159 Q-0	#6DH3	VM34/110 2.5	BS30/97 2.0	VM34/39-1.5	22-24mm	VM34-39	001-029
VM38	4/042 #360	VM22/210 #40	#166 Q-0	#6DH3	VM38/24 2.5	2.5 Body	VM28/163-1.5	22-24mm	VM38-21	001-041
VM44	4/042 #540	VM22/210 #35	#224 AA-5	#7DH2	VM40/02 1.5 (aluminum)	BS30/97 0.7	VM28/163-1.5	17-19mm	VM44-7	001-047

Sudco Special Jetting for VM Series Round Slide Single Carburetors

Sudco can also "Special Jet" any Mikuni VM series carburetor for your particular application. Below is the information you will need to provide our Carburetor Technician Specialist's so they can provide you with the correct carburetor and jetting.

1. Carburetor Size (mm)
2. Type of Carburetor: Clamp-on, Spigot Mount, Flange Mount, Flat-Slide, etc.
3. Application: Model, Year and cubic centimeters. (125cc, 250cc, etc.)
4. Modifications done to engine: Explain in detail, example - big bore kit with cc change, ported cylinder, etc.
5. Type of use for motorcycle: Street, Drag Racing, Road Race, Motocross, Offroad, Enduro, etc.
6. Type of Fuel used
7. Climate conditions: sea level, area of use, high altitude, etc.

Most popular settings are already available. However, if you have modifications done, it is necessary to follow the guidelines to insure receiving the proper jetting at the closest range.

Use the following part numbers when ordering for special jetting or throttle valve change.

Left Idle Screw Carburetor	Jetting Change	Throttle Valve Change	Right Idle Screw Carburetor	Jetting Change	Throttle Valve Change
VM20	001-150	001-151	VM20	———	———
VM22	001-138	001-139	VM20	———	———
VM26	001-110	001-111	VM26	———	———
VM30	001-114	001-115	VM30	———	———
VM32	001-116	001-117	VM32	001-166	001-167
VM34	001-160	001-161	VM34	001-168	001-169
VM36	001-122	001-123	VM36	———	———
VM38	———	———	VM38	001-126	001-127
VM44	001-132	001-133	VM44	———	———

Please Note: Changes and jetting modifications are for use only on racing machines or similar off-road vehicles where pollution laws are not in effect. Not legal for vehicles operated on public highways in the State of California or other areas where similar pollution laws may apply.

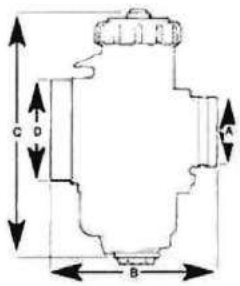

Clamp-On Mount Type

Flange Mount Type

Spigot Mount Type

VM Series Round Slide Single Carburetor Dimensions

Size (mm)	A	B	C	D	Total Width	Throttle Adjust Position	Air Screw Position	Weight (g)	Throttle Valve Material
VM16 Clamp-On	21 ID	67	95	28	61	Left	Left	446	Aluminum
VM18-Clamp-On	22 ID	67	108	32	61	Left	Left	492	Aluminum
VM20 Flange	50.8 Bolt Center	66	115	43	76.5	Left	Left	546	Aluminum
VM22 Flange	49 Bolt Center	85	114	43	82	Left	Left	828	Aluminum
VM24 Spigot	35	80	116	43	76.5	Right	Left	670	Brass
VM26 Spigot	35	93	122	44	82	Left	Right	550	Brass
VM28 Spigot	35	93	122	44	82	Left	Right	550	Brass
VM30 Spigot	40	93	137	58	83	Left	Right	800	Brass
VM32 Spigot Left Idle	40	102	142	58	83	Left	Right	770	Brass
VM32 Spigot Right Idle	40	102	142	58	83	Right	Right	770	Brass
VM34 Spigot Left Idle	40	93	137	58	83	Left	Right	750	Brass
VM34 Spigot Right Idle	40	93	137	58	83	Right	Right	750	Brass
VM36 Spigot	43	116	152	62	79	Left	Right	750	Brass
VM38 Spigot	43	116	154	62	79	Right	Right	830	Brass
VM44 Spigot	52	116	193	70	79	Left	Right	1104	Brass

MIKUNI VM18 Exploded View & Parts

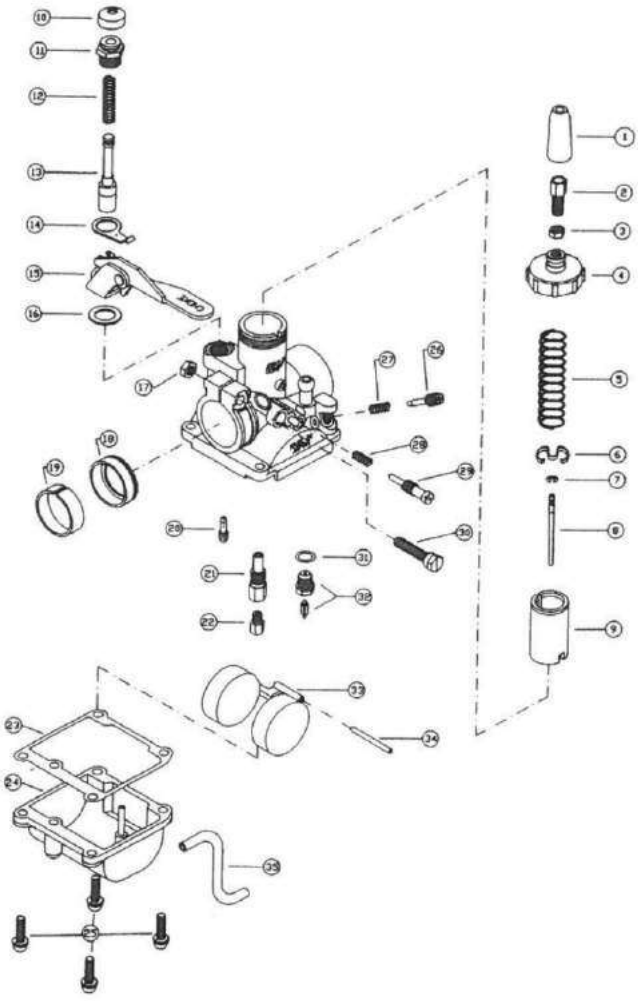

Mikuni VM18 Clamp-On Carburetor

Sold each. Mikuni No.VM18-144

Order No. 001-001

VM18 Replacement Parts

• Lined through part numbers are not available.

No.	Description	Mikuni No.	Order No.
1.	Rubber Cap, Throttle Cable	VM18/67	007-685
2.	Cable Adjuster	M21/14	002-062
3.	Nut, Cable Adjuster	B30/247	002-065
4.	Top, Mixing Chamber	VM16/40	007-273
5.	Spring, Throttle Valve	VM18/170	007-274
6.	Clip, Jet Needle Retaining	VM18H1/38	007-686
7.	E-Ring, Jet Needle	VM20/369	002-083
8.	Jet Needle	J8-4F18	———
9.	Throttle Valve (slide)	VM18/158-1.0	007-425
10.	Rubber Cap, Starter Plunger	VM20/455	002-084
11.	Fitting, Starter Plunger	VM20/456	002-085
12.	Spring, Starter Plunger	VM16/42	002-671
13.	Starter Plunger	VM18/144	002-092
14.	Spring Plate, Starter Lever	VM18/151	———
15.	Starter Lever	VM18/215	007-687
16.	Washer, Starter Lever	BV26/118	———
17.	Nut, Clamp Bolt	N1=05	007-279
18.	Sealing Ring, Rubber	VM18/326	007-280
19.	Ring, Insulator (I.D.=23mm)	VM18/327	007-281
20.	Pilot Jet	VM22/210	Pg.212
21.	Needle Jet	VM15H1/17-0-0	———
22.	Main Jet	4/042	Pg.214
23.	Gasket, Float Bowl	VM17/161	007-282
24.	Float Bowl	VM18/161	007-283
25.	Screw, Float Bowl 4x14mm	CW2=0414	002-522
26.	Air Adjusting Screw	VM20/305	002-720
27.	Spring, Air Adjusting Screw	VM15/112	002-863
28.	Spring, Idle Adjusting Screw	VM15/112	002-863
29.	Idle Adjusting Screw	VM18/164	007-284
30.	Bolt, Clamp	VM16/65	007-285
31.	Washer, Needle Valve Seat	VM15/07	007-286
32.	Needle Valve Assembly	VM15/172-#1.5	007-288
33.	Float	VM17/159	007-290
34.	Pin, Float	BV26/22	002-107
35.	Hose, Overflow	VM13/06	———

Mikuni VM Series Carburetors are intended for off-road riding and racing use only. Not legal for use in California or other locations where similar pollution laws may apply.

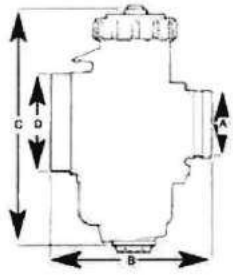

Float Height
20 - 22mm

Carburetor Dimensions

Size (mm)	A	B	C	D	Total Width
VM18-144	23 ID	67	108	32	61

VM18 Clamp-On Standard Jetting Specifications

Carb Size	Main Jet	Pilot Jet	Needle Jet	Jet Needle	Throttle Valve Cutaway	Air Jet	Needle Valve Set	Float Height	Mikuni No.	Order No.
VM18	4/042 #80	VM22/210 #30	#145 O-0	#4F18	VM18/158 1.0	None	VM15/172-1.5	20-22mm	VM18-144	001-001

MIKUNI VM24-512 Exploded View & Parts

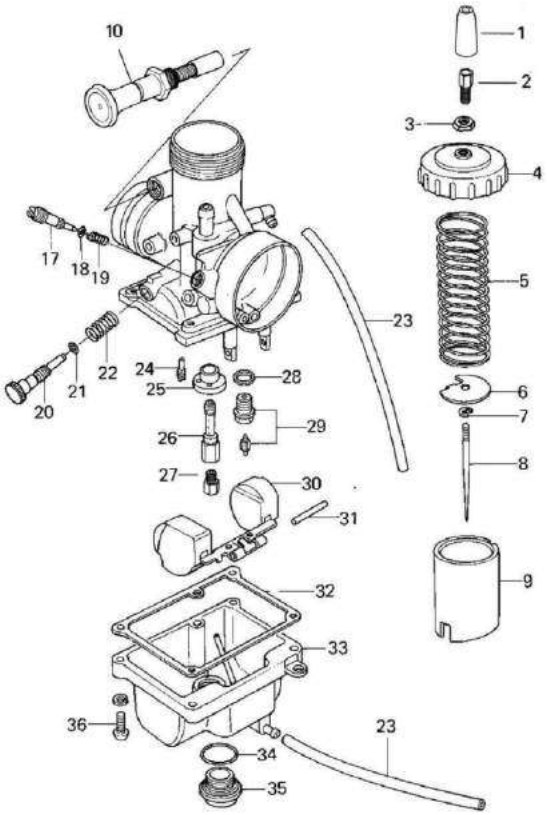

Mikuni VM24-512 Spigot Mount Carburetor

Sold each. Mikuni No.VM24-512.

Order No. 001-018

VM24-512 w/side choke Replacement Parts

• Lined through part numbers are not available.

No.	Description	Mikuni No.	Order No.
1.	Rubber Cap, Throttle Cable	VM26/46	002-061
2.	Cable Adjuster	VM30/132	018-542
3.	Nut, Cable Adjuster	B30/247	002-065
4.	Top, Mixing Chamber	VM26/44A	002-236
5.	Spring, Throttle Valve	VM24/195	002-069
6.	Spring Seat Plate	VM26/55	———
7.	E-Ring, Jet Needle	VM20/369	002-083
8.	Jet Needle	5I14	———
9.	Throttle Valve (slide)	832-27043-1.5	———
10.	Starter Plunger Assembly	VM24/774	007-796
17.	Air Screw	VM14/73	———
18.	O-Ring, Air Screw	VM14/75	002-676
19.	Spring, Air Screw	VM15/112	002-863
20.	Idler Adjuster Screw	603-16002	———
21.	O-Ring, Idle Adjuster Screw	BV32/04	002-212
22.	Spring, Idle Adjuster Screw	VM26/197	———
23.	3mm I.D. Vent & Overflow Hose	VM17/177A	———
24.	Pilot Jet	VM22/210	Pg.212
25.	Main Jet Ring	VM26/538	———
26.	Needle Jet N-8 (864 Series)	784-111421-N-8	———
27.	Large Hex Main Hex	4/042	Pg.214
28.	Washer, Needle Valve Seat	VM26/25	002-188
29.	Needle Valve Assembly 2.5	786-15005-2.5	002-892
30.	Float	VM24/365	007-255
31.	Pin, Float	BV26/22	002-107
32.	Gasket, Float Bowl	VM20/492	007-250
33.	Float Bowl	VM22/314	———
34.	O-Ring, Drain Plug 17.5 x 1.4	BN042/64	002-602
35.	Drain Plug, Main Jet	BN042/58	———
36.	Screw, Float Bowl 4x16mm	CW2=0416	002-823

Mikuni VM Series Carburetors are intended for off-road riding and racing use only. Not legal for use in California or other locations where similar pollution laws may apply.

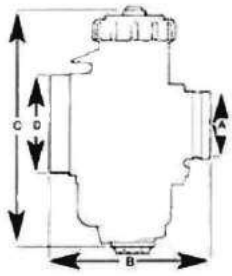

Float Height
21 mm

Carburetor Dimensions

Size (mm)	A	B	C	D	Total Width
VM24	35	80	116	43	76.5

VM24-512 Standard Jetting Specifications

Carb Size	Main Jet	Pilot Jet	Needle Jet	Jet Needle	Throttle Valve Cutaway	Air Jet	Needle Valve Set	Float Height	Mikuni No.	Order No.
VM24	4/042 #210	VM22/210 #40	#864 N-8	#5I14	832-27043 1.5	None	786-1500 2.5	21mm	VM24-512	001-018

MIKUNI VM26-606 Exploded View & Parts

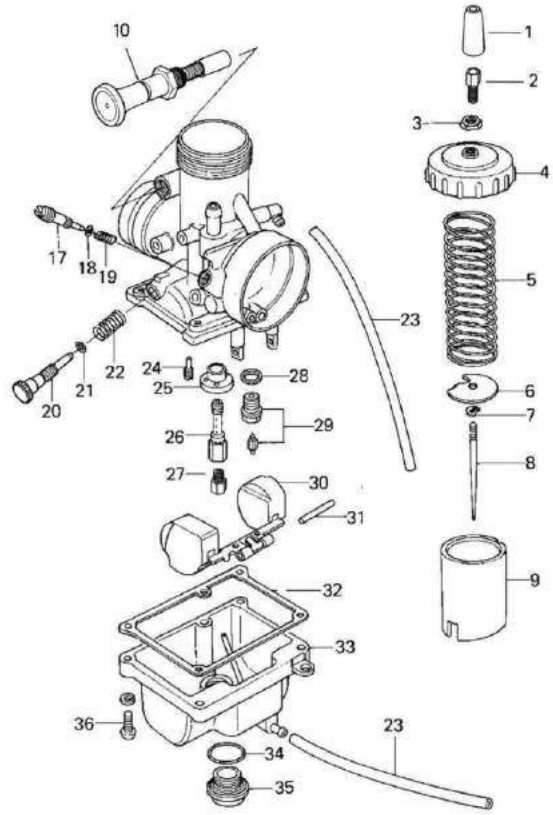

Mikuni VM26-606 Spigot Mount Carburetor

Sold each. Mikuni No.VM26-606.

Order No. 001-021

VM26-606 with Side Choke Replacement Parts

• Lined through part numbers are not available.

No.	Description	Mikuni No.	Order No.
1.	Rubber Cap, Throttle Cable	VM26/46	002-061
2.	Cable Adjuster	M21/14	002-062
3.	Nut, Cable Adjuster	B30/247	002-065
4.	Top, Mixing Chamber	VM26/44A	002-236
5.	Spring, Throttle Valve	VM24/195	002-069
6.	Spring Seat Plate	VM28/132	002-079
7.	E-Ring, Jet Needle	VM20/369	002-083
8.	Jet Needle	J8-5E75	007-005
9.	Throttle Valve (slide)	VM24/361-1.5	———
10.	Starter Plunger Assembly	VM16/210A	007-752
17.	Air Screw	VM14/73	———
18.	O-Ring, Air Screw	VM14/75	002-676
19.	Spring, Air Screw	VM15/112	002-863
20.	Idler Adjuster Screw	603-16002	———
21.	O-Ring, Idle Adjuster Screw	BV32/04	002-212
22.	Spring, Idle Adjuster Screw	VM26/197	———
23.	3mm I.D. Vent & Overflow Hose	VM17/177A	———
24.	Pilot Jet	M28/1001	Pg.212
25.	Main Jet Ring	VM26/538	———
26.	Needle Jet 0-0 (332 Series)	VM26/581	003-730
27.	Large Hex Main Hex	4/042	Pg.214
28.	Washer, Needle Valve Seat	VM26/25	002-188
29.	Needle Valve Assembly 2.5	VM26/26-#2.5	002-190
30.	Float	VM24/365	007-255
31.	Pin, Float	BV26/22	002-107
32.	Gasket, Float Bowl	VM20/492	007-250
33.	Float Bowl	VM22/314	———
34.	O-Ring, Drain Plug	BN042/64	002-602
35.	Drain Plug, Main Jet	BN042/58	———
36.	Screw, Float Bowl 4x16mm	CW2=0416	002-823
see photo	**VM26-606 Carb Rebuild Kit**	MK-606	025-660

Mikuni VM Series Carburetors are intended for off-road riding and racing use only. Not legal for use in California or other locations where similar pollution laws may apply.

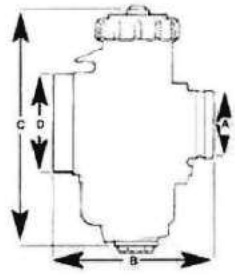

Float Height
22- 24mm

Carburetor Dimensions

Size (mm)	A	B	C	D	Total Width
VM26	35	93	122	44	82

VM26-606 Standard Jetting Specifications

Carb Size	Main Jet	Pilot Jet	Needle Jet	Jet Needle	Throttle Valve Cutaway	Air Jet	Needle Valve Set	Float Height	Mikuni No.	Order No.
VM26	4/042 #190	M28/1001 #22.5	#332 0-0	#5E75	VM24/361 1.5	Fixed	VM26/26-2.5	22-24mm	VM26-606	001-021

MIKUNI VM26-606 Parts

VM26-606 Carburetor Rebuild Kit

Kit includes GENUINE Mikuni parts to rebuild the VM26 carburetor. Sold as a kit.

Order No. 025-660

Exploded View No.	Qt	Contents
1.	1	Rubber Cap, Throttle Cable
not shown	1	Top (Cap) Cover Gasket
17	1	Air Screw
18	1	O-Ring, Air Screw
19	1	Spring, Air Screw
20	1	Idler Adjuster Screw
21	1	O-Ring, Idle Adjuster Screw
22	1	Spring, Idle Adjuster Screw
28	1	Washer, Needle Valve Seat
29	1	Needle Valve Assembly 2.5
32	1	Gasket, Float Bowl
34	1	O-Ring, Drain Plug
36	4	Screw, Float Bowl 4x16mm

VM26 OEM Float Bowl Gasket

Genuine replacement gasket for applications listed.
Made in Japan. Sold each.

Order No. 007-250

Kawasaki

Model	Year	OEM Reference
KX60A1/A2	83-84	11009-1147
KX60B1-B19	85-03	11009-1147
KX65A1-A6	00-05	11009-1147
KX65A6F/A7F/A8F/A9F	06-09	11009-1147
KX65ABF/ACF/ADF	11-13	11009-1147
KDX80A1/A2/B1/B2	80-83	11009-1147
KDX80C1/C2/C3/C4	84-88	11009-1147
KX80A1	1979	11009-1147

KTM

65 SX	98-08	45031010100
65 XC	08-09	45031010100

Suzuki

RM60K3/K4	03-04	K1100-91147
RM65K3/K4/K5	03-05	K1100-91147

Yamaha

ATV		
YFS200 Blaster	88-06	304-14184-00-00
YFZ350 Banshee	87-06	304-14184-00-00
Dual Sport & Offroad		
YZ50G	1980	304-14184-00-00
YZ60H/J/K	81-83	304-14184-00-00
YZ80A/B/C/D/E/F/G/H/J/K/L	74-84	304-14184-00-00
YZ80N/S/T/U/W/A/B/D/E1	85-93	304-14184-00-00
YZ80F1/G1/H1/J1/K1/L/M1/N1	94-01	304-14184-00-00
DT100A/B/C/D/E/F/G/H/J/K	74-83	304-14184-00-00
MX100F/G/H/J/K	79-83	304-14184-00-00
RT100A	1990	304-14184-00-00
RT100D-M	92-00	304-14184-00-00
AT2/AT3-125 Enduro	72-73	304-14184-00-00
DT125A/B/C Enduro	74-76	304-14184-00-00
DT125E/F/G/H Enduro	78-81	304-14184-00-00
CT2/CT3-175 Enduro	72-73	304-14184-00-00
DT175A/B/C Enduro	74-76	304-14184-00-00
DT175E/F/G/H Enduro	78-81	304-14184-00-00
MX175F/G/H	79-81	304-14184-00-00
TY175B/C Trials	75-76	304-14184-00-00
RT180A-K	90-98	304-14184-00-00
TY250C/D Trials	76-77	304-14184-00-00

MIKUNI VM Spigot Mount Type Exploded View

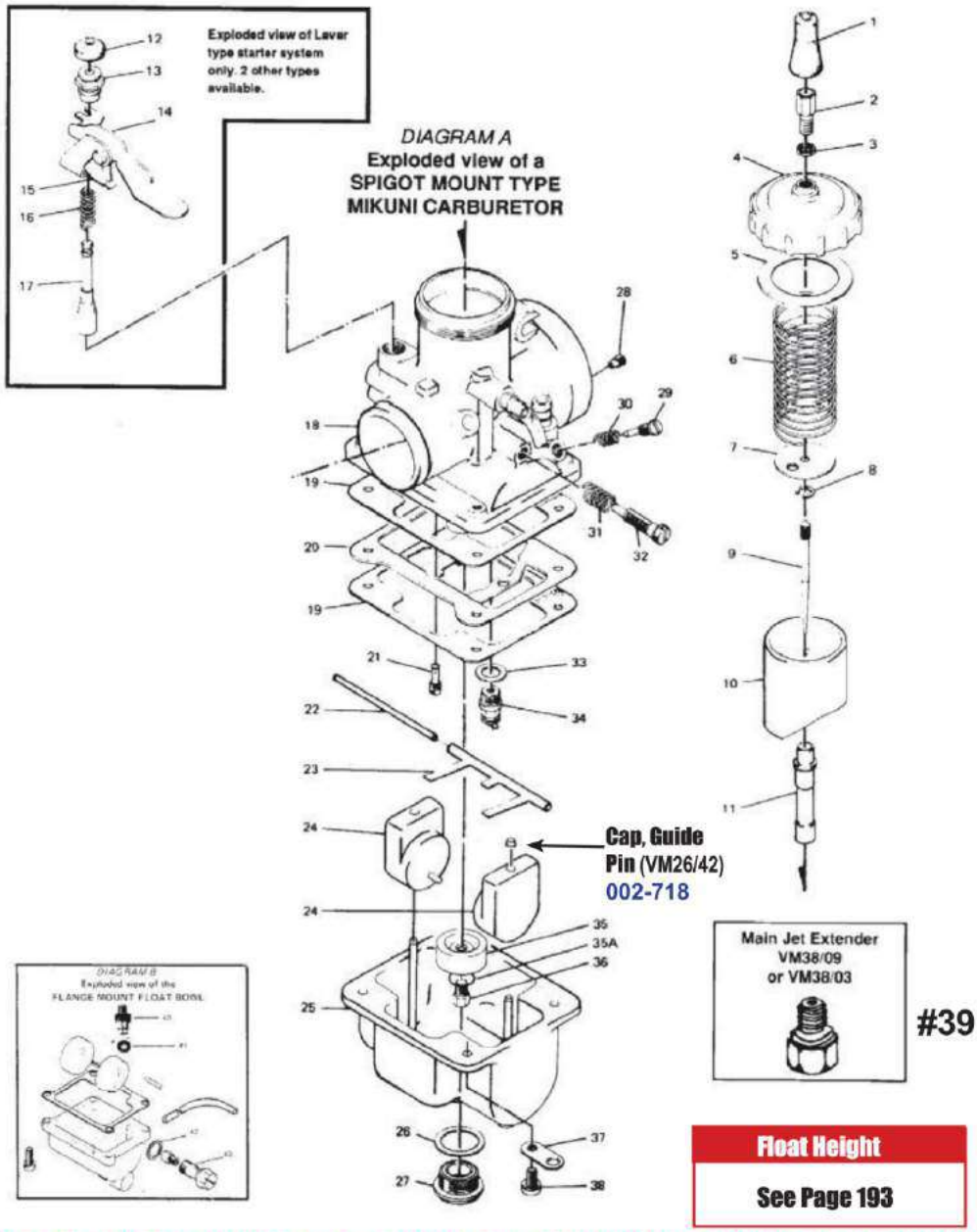

Float Height

See Page 193

Mikuni VM Series Carburetors are intended for off-road riding and racing use only. Not legal for use in California or other locations where similar pollution laws may apply. Note: VM Series Standard Jetting Specifications and Float Height are listed on Page 193.

VM Series Round Slide Single Carburetor Dimensions

Size (mm)	A	B	C	D	Total Width	Throttle Adjust Position	Air Screw Position	Weight (g)	Throttle Valve	Material
VM16 Clamp-On	21 ID	67	95	28	61	Left	Left			Aluminum
VM18-Clamp-On	22 ID	67	108	32	61	Left	Left	492		Aluminum
VM20 Flange	50.8 Bolt Center	66	115	43	76.5	Left	Left	546		Aluminum
VM22 Flange	49 Bolt Center	85	114	43	82	Left	Left			Aluminum
VM24 Spigot						Right	Left			Aluminum
VM26 Spigot	35	93	122	44	82	Left	Right	550		Brass
VM30 Spigot	40	93	137	59	83	Left	Right	800		Brass
VM32 Spigot Left Idle	40	102	142	58	83	Left	Right	770		Brass
VM32 Spigot Right Idle	40	102	142	58	83	Right				Brass
VM34 Spigot Left Idle	40	93	137	58	83	Left	Right	750		Brass
VM34 Spigot Right Idle	40	93	137	58	83	Right				Brass
VM36 Spigot	43	116	152	62	79	Left	Right	750		Brass
VM38 Spigot	43	116	154	62	79	Right	Right	830		Brass
VM44 Spigot	52	116	193	70	79	Left	Right	1104		Brass

VM Replacement Parts

• Lined through part numbers are no longer available.

Note: VM26-606 carburetor (with side choke) parts are listed on page 196-197.

No.	Description & Application	Mikuni No.	Order No.
1.	**Rubber Cap, Throttle Cable**		
	All Mikuni VM Series Carbs	VM26/46	002-061
	for 45° angled cable adjuster	VM22/18	002-370
2.	**"A" Cable Adjuster**		
	All Mikuni VM Series Carbs (6mm)	M21/14	002-062
	All Mikuni VM Series Carbs (7mm)	VM28/256	002-063
	"B" Cable Adjuster, Angled 45∫		
	All Mikuni VM Series Carbs	I-M22-10-3	002-064
3.	**Locknut, Cable Adjuster**		
	All Mikuni VM Series Carbs	B30/247	002-065
4.	**Top, Mixing Chamber**		
	VM26 - VM28 spigot	VM26/56	002-236
	VM30 small body spigot	VM26/51	002-235
	VM30 - VM34 spigot	VM34/27	002-066
	VM36 - VM38 spigot	VM36/09	002-067
	VM40 - VM44 spigot	VM44/05	002-068
	Note: Gasket comes with each VM Mixing Chamber Top. Cap		
5.	**Gasket, Top Mixing Chamber**		
	Top Gasket only VM26-VM28	VM26-57	007-791
	Top Gasket only VM30-VM34	VM34-29	007-792
	Top Gasket only VM36-VM38	VM36-06	007-793
	Top Gasket only VM40-VM44	VM40-07	007-794
6.	**Spring, Throttle Valve**		
	VM22 Flange, VM28 spigot	VM24/195	002-069
	VM26	VM28/58	002-071
	VM30 spigot **(std)**	VM34/50	002-072
	VM32 - VM34 flange **(std)**	VM34/50	002-072
	VM32 - VM36 **(std)**	VM34/55	002-074
	VM30 - VM36 spigot **(Light)**	VM34/06	002-073
	VM38 spigot **(std)**	VM34/152	002-138
	VM40 - VM44 spigot	VM44/13	002-075
7.	**Plate, Spring Seat**		
	VM26 - VM28, VM30 flange	VM26/54	002-077
	VM26 - VM28 spigot	VM28/132	002-079
	VM30 - VM34 spigot	VM34/31	002-080
	VM32 - VM34 flange	VM34/31	002-080
	VM36 - VM38 spigot	VM35/09	002-081
	VM40 - VM44 spigot	VM44/09	002-082
8.	**Clip, Needle Positioning**		
	VM26 - VM38 spigot	VM20/369	002-083
	VM40 - VM44 spigot	BS32/126	002-455
9.	**Jet Needle**		
	VM18, VM20, VM22	#4 Series	Pg.205
	VM26, VM28	#5 Series	Pg.205
	VM30, VM32, VM34, VM36, VM38	#6 Series	Pg.205
	VM40, VM44	#7 Series	Pg.205
10.	**Throttle Valve (Slide)**		Pg.209-209
11.	**Needle Jets**		
	VM18	#145 Series	———
	VM20	#239 Series	———
	VM22	#257 Series	———
	VM26 **(except VM26-606)**	#182 Series	Pg.207
	VM28	#169 Series	Pg.207
	VM30, VM32, VM34, VM36, VM38	#159 Series	Pg.207
	VM38	#166 Series	Pg.207
	VM40, VM44	#224 Series	Pg.206
12.	**Rubber, Starter Plunger**		
	VM26 - VM44 spigot	VM20/455	002-084
13.	**Fitting, Starter Plunger**		
	VM26	VM26/116	002-815
	VM30 - VM44 spigot	VM20/456	002-085
14.	**Lever, Starter**		
	VM26 - VM28 Spigot	VM28/135	007-762
	VM30 - VM34 Spigot	VM28/124	002-135
	VM36 - VM38 Spigot	VM32/53	002-087
	VM22 flange, VM40, VM44 Spigot	VM36/58	002-136
15.	**Spring Plate, Starter Lever**		
	VM26 & VM28 spigot	VM26/09C	002-088
	VM30 - VM44 spigot	VM32/17	002-089

VM Replacement Parts

No.	Description & Application	Mikuni No.	Order No.
16.	**Starter Plunger Spring**		
	VM26 - VM44 spigot	VM14SC11/89	002-090
	VM26 - VM34 flange	VM15SC6/89	002-358
17.	**Starter Plunger**		
	VM24 & VM26 flange	VM15/62	002-091
	VM26 & VM28 spigot	VM15/62	002-091
	VM30 - VM34 flange	VM18/144	002-092
	VM30 - VM44 spigot	VM18/144	002-092

Lever Type Starter System

Includes parts **12 thru 17** from exploded view.

	For VM30 - VM34		002-350B
	For VM36 - VM44		002-350A

Pull-Up Type Starter System

Includes parts **A thru E** listed below.

	VM20-273	VM16/210	007-752
	VM30-VM44 spigot		002-352
A.	Rubber Cap	VM20/455	002-084
B.	Clip	VM14SC11/99	002-096
C.	Starter Plunger Fitting	VM20/300	002-097
D.	Starter Plunger Spring	VM14SC11/89	002-090
E.	Starter Plunger	VM38/06	002-098

Cable Type Starter System

Includes parts **A. thru F.** listed below.

	For VM20, VM28/418	(TM28)	002-353
	VM30-VM44 spigot	MK-412	002-351
A.	Starter Plunger Top, Rubber Cap	VM26/46	002-061
B.	Cable Adjuster	M21/14	002-062
C.	Cable Adjuster Locknut	B30/247	002-065
D.	Starter Plunger Fitting	VM15/37	002-093
E.	Starter Plunger Spring	VM32/69	002-094
F.	Starter Plunger VM20, VM26	VM15SC4/86	007-751
	Starter Plunger VM30 - VM44	VM15SC4/85	002-095
18.	**Mixing Chamber Body**	not available	———
19.	**Float Bowl Gasket**		
	VM20 flange	VM20/492	007-250
	VM22 flange	———	002-009
	VM26 - VM34 flange	VM30/103	002-099
	VM26-28 spigot	VM28/129	002-361
	VM30mm small body	VM30/172	002-103
	VM30 - VM34mm spigot (without baffle plate)	VM34/30	002-100
	VM30 - VM34mm spigot (with baffle plate)	VM34/71	002-101
	VM36 - VM44mm spigot	VM36/20	002-102
20.	**Float Bowl Baffle Plate**		
	VM26 - VM34 spigot	VM34/72	002-104
	VM30 - VM34 spigot (replacement)	VM34/114	002-362
	VM36 - VM38 spigot	VM36/16	002-105
	VM40 - VM44 spigot	VM44/12	———

MIKUNI VM Parts

VM Replacement Parts

No.	Description & Application	Mikuni No.	Order No.
21.	**Pilot Jet**		
	VM18 - VM44	VM22/210	Pg.212
	VM20 Flange	M28/1001	Pg.212
22.	**Float Arm Hinge Pin**		
	VM26 - VM28 spigot	BV26/22	002-107
	VM24 - VM34 flange	BV26/22	002-107
	VM30 - VM44 spigot	VM30/160	002-605
23.	**Float Arm**		
	VM26 - VM34 flange	VM28/59	002-108
	VM26 - VM28 spigot	VM28/166	002-109
	VM30 small body	VM28/166	002-109
	VM30 - VM34 spigot	VM34/73	002-111
	VM36 - VM44 spigot	VM36/15	002-112
24.	**Float - Two basic types of float system: Independent (Type A) and Twin (Type B).**		

A. **Independent Type -** Non corrosive plastic compound. Standard on VM 26 - VM44 spigot and flange type

VM Carburetors		
VM26 - VM28 spigot	VM28/164	002-116
VM26 - VM30 flange	VM24/236	002-113
VM36 - VM44 flange	VM24/236	002-113
VM30 - VM34 spigot	VM34/36	002-118
with baffle plate	VM34/61	002-119
VM32 flange	VM32/55	002-117

B. **Twin Type** - Brass compound. Standard on VM24 - VM26 flange type carburetors

VM24 - VM26 flange	VM24/171	002-114

B. **Twin Type -** Non corrosive plastic compound. Standard on VM20-273 flange carburetor.

VM20 flange	VM20/495	007-725

25.	**Float Bowl**		
	VM30 - VM34 spigot	VM34/68	002-121
	with overflow		
	VM36 - VM38 spigot	VM36/07	002-122
	VM40 - VM44 spigot	VM44/04	002-120
26.	**Main Jet Plug Washer**		
	VM30 - VM38 spigot	4/053	002-127
	VM26 - VM28 spigot	VM28/134	002-128
	VM40 - VM44 spigot	VM28/134	002-128
	Main Jet Plug O-Ring		
	VM30-36 Spigot	VM28/254	002-531

VM Replacement Parts

No.	Description & Application	Mikuni No.	Order No.
27.	**Main Jet Plug (Drain Plug)**		
	VM26-8074	VM28/133	002-130
	VM40 - VM44 spigot	VM28/133	002-130
	VM30 - VM34 spigot (brass)	VM34/42	002-131
	VM30 - VM36 spigot	VM28/253	002-526
	VM30 small body spigot	VM26/160	002-133
	VM38 spigot	VM38/08	002-134
	(brass deep type plug)		
	VM30 - VM34 spigot	VM38/08	002-134
	(brass deep type plug)		
28.	**Air Jet**		
	VM26 - VM44 spigot	BS30/97	Pg.213
29.	**Air Adjusting Screw**		
	VM26 - VM44 spigot	VM20/214	002-180
	VM24- VM34 flange	VM20/214	002-180
30.	**Air Adjusting Screw Spring**		
	VM26 - VM44 spigot	M12F/46A	002-181
31.	**Idle Adjusting Screw Spring**		
	VM26 - VM44 spigot	M20/221	002-182
	VM24 - VM34 flange	M20/221	002-182
32.	**Idle Adjusting Screw**		
	VM30 spigot	VM28/142	002-139
	VM30 flange	VM22/171	002-183
	VM36 - VM38 spigot	VM22/171	002-183
	VM26 - VM28 spigot	VM24/224	002-184
	VM32 - VM34 spigot	VM24/224	002-184
	VM40 - VM44 spigot	VM24/224	002-184
	VM24 - VM34 flange	VM24/224	002-184
	VM30 spigot small body	VM30/170	002-186
	Idle Conversion for	VM24/224	002-184
	OEM Yamaha YFS200 Blaster and YFZ350 Banshee		
	Locknut	BS30/247	002-065
33.	**Needle Valve Washer**		
	VM30 - VM44 spigot	BS34/52-0.5	002-187
	VM24 - VM30 flange	VM26/25	002-188
	VM26 - VM28 spigot	VM26/25	002-188
34.	**Needle Valve Set (Needle Valve & Seat Assembly)**		
	All Needle Valve seats for VM series are thread-in type.		
	See page 201 for photo and carburetor applications.		
35.	**Main Jet Ring**		
	VM26-VM28, VM40 - VM44 spigot	VM28/228	002-201
	VM30 - VM38 spigot	VM36/17	002-202
35A.	**Main Jet Washer**		
	All VM with no main jet ring	VM20/169	002-203
	VM28 spigot	VM15/80A	002-239
36.	**Main Jet**		
	All VM	4/042	Pg.214
37.	**Anchor Plate**		
	VM26 - VM28 spigot	VM15/164	———
	VM30 - VM44 spigot	VM28/79A	002-204
38.	**Float Bowl Screw**		
	VM26 - VM28 spigot (4x16mm)	CW2=0416	002-823
	VM30 - VM44 spigot (5x18mm)	CW2=0518	002-719
39.	**Main Jet Extender**		
	VM38 spigot with Needle Jet #159 Series and #166 Series	VM38/09	002-207
40.	**Needle Jet Setter**		
	VM26 - VM34 flange	VM28/53	002-209
41.	**Needle Jet Setter O-Ring**		
	VM22 - VM34 flange	BV32/04	002-212
42.	**Banjo Bolt Washer**		
	VM22 flange	VM26/125	002-213
	VM24 - VM34 flange	VM26/124	002-214
	VM30 flange	30BIC/35	002-215
43.	**Banjo Bolt**		
	VM22 - VM24 flange	VM24/286	002-216
	VM26 - VM34 flange	VM28/61A	002-217

Mikuni Rubber Mounting Flanges, See Page 220

VM15/172

VM26/26

VM28/163

VM38/11

VM28/511 & VM34/39

Needle Valve Assembly (No. 34. in exploded view)

Applications: VM16, VM18 Clamp-On & VM20mm Flange

Size	Application	Mikuni No.	Order No.
(1.5)		VM15/172	007-288
(2.0)		VM15/172	007-289
	Washer for Needle Valve Seat	VM15/07	007-286

Applications: VM22mm - VM30mm Flange, VM26 - VM28mm Spigot, VM30 Spigot with Small Body

Size	Application	Mikuni No.	Order No.
(1.0)		VM26/26	002-230
(1.2)		VM26/26	002-234
(1.5)		VM26/26	002-231
(1.8)		VM26/26	007-965
(2.0)		VM26/26	002-189
(2.5)		VM26/26	002-190
(2.8)		VM26/26	002-191
	Washer for Needle Valve Seat	VM26/25	002-188

Applications: VM32 - VM34mm Flange, VM32 - VM34mm Spigot

Size	Application	Mikuni No.	Order No.
(3.0)		VM34/39	002-192
(3.3)		VM34/39	002-193
(1.2)		VM28/163	002-195
(1.5)		VM28/163	002-196
(1.8)		VM28/163	002-197
(2.0)		VM28/163	002-198
(2.5)		VM28/163	002-199
(3.0)		VM28/163	007-800
Washer for Needle Valve Seat		B34/52	002-187
(3.5)		VM38/11	002-200
(3.5)	OEM Yamaha 24X-14107-35-00	VM38/11	002-200

Applications: VM30 - VM38mm Spigot VM30 - VM44mm Spigot - Snowmobile OEM (With viton tip needle)

Size	Application	Mikuni No.	Order No.
(1.5)		VM28/511	002-233
(1.8)		VM28/511	002-895
(2.0)		VM28/511	002-896
(2.5)		VM28/511	002-894

Priming Nozzle

For oil injection. Sold each.

VM34/181 **Order No.** 007-690

40° Cable Adjuster Assembly

Includes rubber cap, two lock-nuts, cable adjuster and 40° tube.
Works on Keihin and Mikuni carburetor caps.

Order No. 007-730

90° Cable Adjuster Assembly

This adjuster has threads on one end, the other end swivels.
Includes rubber cap, locknut, cable adjuster and 90° tube.
Works on Keihin and Mikuni carburetor caps.

Order No. 007-731

TM Power Jet Kit

The Power Jet Kit is used on 2-stroke engine applications to improve mid-range throttle response and add additional fuel to wide open throttle running conditions. Easily installs on TM series Carburetors.
(#80, #100 and #120 sized jets included) Sold as a kit.

Order No. 002-041

45° Cable Adjuster

45° Cable Adjuster fits all Mikuni VM Carburetor Series
#2 in Mikuni VM parts list Works on all Mikuni VM Carburetor Series
Carburetors Adjuster, locknut, and rubber cap all sold separate.

Description	Mikuni No.	Order No.
Angles 45° Cable Adjuster	I-M22-10-3	002-064
Cable Adjuster Locknut	B30/247	002-065
Throttle Cable Rubber Cap	VM22/18	002-370

MIKUNI Jet Needles

Quick Reference Chart for Needle Selection
(average Performance Chart)

Note: The following listing of needles are simply the average performance of a needle between 1/4 and 3/4 throttle opening. Needles are constructed such that a given point on a needle, (for example, at 3/4 throttle opening), the needle may be found to perform richer at this given point when compared to the same given point on another needle, but according the the average performance chart, the needle should perform leaner.

For example:
Average Performance Chart

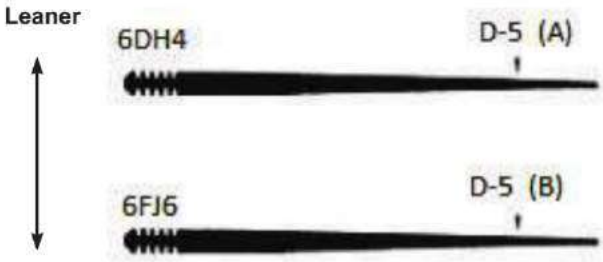

At **D-5 (A)**, the taper diameter is **1.915**, at **D-5 (b)**, the taper is **2.040**; the taper diameter at **D-5 (A)** is smaller than **D-5 (B)**. At this given point of throttle opening **(3/4)**, needle **#6DH4** will run slightly richer than **#6FJ6**, but the average performance will still be that **#6DH4** will be a leaner needle because it will perform leaner at more given points than a **#6FJ6.** Consequently, if you are concentrating on a specific throttle opening for competition use, be certain to check the taper diameter at that point of throttle opening.

For a more detailed and comprehensive explanation of the various needles as to their taper diameters at given points, see **NEEDLE TAPER DIAMETER DIMENSION CHARTS.**

THE QUICK REFERENCE CHART FOR NEEDLE SELECTION was prepared by measuring the needles as to their diameter at given points. Given points are 10mm apart from each other.

By computing the different measurements and arranging them in order of taper thickness or thinness, three categories for application of needles were determined.

Category I - Competition.
For example, motocross racing and desert racing where mid-range throttle operation is vital.

Category II - Racing.
For example, Road racing, where 3/4 to full throttle operation is vital.

Category III - Overall.
For example, Street riding,
where the full range of throttle operation is required.

Jet Needle #4 Series

		Competition	Racing	Overall
Leaner	1	#4D8	#4P3	#4P3
	2	#4DH7	#4D8	#4D8
	3	#4DG6	#4D3	#4D3
	4	#4P3	#4F10	#4DG6
	5	#4D3	#4DG6	#4DH7
	6	#4F6	#4F6	#4F10
	7	#4F10	#4DH7	#4F6
	8	#4F15	#4F15	#4F15
	9	#4E14	#4E1	#4E1
	10	#4J13	#4L13	#4L13
	11	#4L6	#4J11	#4J13
	12	#4L13	#4J13	#4J11
Richer	13	#4L11	#4L6	#4L6

Jet Needle #5 Series (A)

		Competition	Racing	Overall
Leaner	1	#5D6	#5C4	#5C4
	2	#5D120	#5D6	#5D6
	3	#5C4	#5D5	#5D5
	4	#5EJ13	#5D120	#5D120
	5	#5J9	#5D1	#5F18
	6	#5F18	#5F18	#5D1
	7	#5DP7	#5F16	#5EJ13
	8	#5FL14	#5FJ9	#5F3
	9	#5F3	#5F3	#5EH7
	10	#5EH7	#5EJ13	#5FJ9
	11	#5FL	#5EH7	#5DP
	12	#5D5	#5DH21	#5FL14
	13	#5E13	#5FL14	#5FL7
	14	#5L1	#5FL7	#5E13
	15	#5J6	#5E13	#5F16
	16	#5D1	#5DP7	#5DH21
	17	#5F9	#5J9	#5J9
	18	#5F16	#5J6	#5J6
	19	#5DH21	#5L1	#5L1
Richer	20	#5F12	#5F12	#5F12

Jet Needle #5 Series (B)

		Competition	Racing	Overall
Leaner	1	#5EP8	#5DP2	#5DP2
	2	#5EJ11	#5DL13	#5DL13
	3	#5EL9	#5EJ11	#5EJ11
	4	#5EL9	#5EJ11	#5EJ11
	5	#514	#5EP8	#5EP8
	6	#5DL13	#5FL11	#5FL11
Richer	7	#5DP2	#514	#514

Two Types of needles

Single Taper Type

Double Taper Type

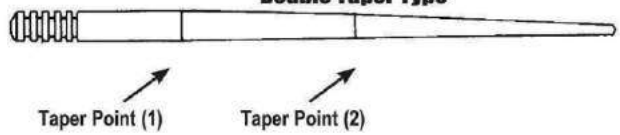

Jet Needles

The Jet Needle controls the fuel mixture in the mid-range (1/4-3/4) throttle position. The taper of the needle determines the amount of fuel. For example, the thinner the diameter of the needle, the more fuel will be drawn. The thicker the diameter of the needle, the less fuel will be drawn.

Needle Taper Diameter Dimension Chart

D-1 through D-5 indicates diameter (mm) at each point.

	A	B	D-1	D-2	D-3	D-4	D-5
#4E1	50.3	28.0	2.515	2.515	2.345	2.127	1.924
#4DH7	50.3	23.0	2.518	2.518	2.386	2.098	1.790
#4J13	50.2	24.0	2.513	2.513	2.230	1.800	1.40
#4L6	50.3	24.5	2.515	2.515	2.178	1.660	1.190
#4J11	41.5	21.3	2.512	2.506	2.188	1.776	

D-1 through D-6 indicates diameter (mm) at each point.

	A	B	D-1	D-2	D-3	D-4	D-5	D-6
#5F3	58.0	27.4	2.519	2.519	2.419	2.135	1.863	
#5EJ11	60.3	28.5	2.515	2.515	2.515	2.241	1.839	1.420
#5FL11	60.3	28.2	2.518	2.518	2.438	2.175	1.740	1.256
#5FL14	58.0	28.0	2.520	1.520	2.440	2.170	1.735	
#5FL7	58.0	28.0	2.518	2.518	2.440	2.170	2.170	1.735
#5DP7	57.6	26.4	2.512	2.512	2.440	2.259	1.580	
#5J6	58.0	27.5	2.518	2.518	2.340	1.890	1.450	
#5L1	58.0	27.0	2.518	2.518	2.330	1.811	1.297	
#5J9	58.0	27.0	2.522	2.520	1.432	1.996	1.505	

D-1 through D-6 indicates diameter (mm) at each point.

	A	B	C	D-1	D-2	D-3	D-4	D-5	D-6
#6F5	62.3	38.1	19.0	2.515	2.456	2.454	2.364	2.098	1.840
#6F4	62.3	32.0	19.4	2.515	2.442	2.436	2.206	1.939	1.678
#6F8	62.3	34.0	21.5	2.512	2.512	2.386	2.214	1.945	1.688
#6F16	64.6	31.2	18.4	2.520	2.404	2.400	2.201	1.941	1.679

Needle Taper Diameter Dimension Chart

(a)=Needle Length (mm)
(b)=Length between points (x) and the taper point (Y) 1=10mm
2=20mm
3=30mm
4=40mm
5=50mm
D-1, -2, -3, -4, -6 are the actual taper diameters at those given points in millimeters

#Series Type	Application
#4	All VM18 Carburetors,VM20 VM22, VM24
#5	VM26 - VM32 Spigot VM28 - VM34 Flange TM24, TM32, TM34
#6	VM30 - VM38 Spigot
#7	VM40 - VM44 Spigot
#8	HSR42, HSR45, HSR48
#9	RS34 - RS40 Smoothbore, TM36, TM40 (HS40) Pumper Carb

D-1 through D-6 indicates diameter (mm) at each point.

	A	B	D-1	D-2	D-3	D-4	D-5	D-6
#6DH2	62.3	28.0	2.511	2.511	2.466	2.295	2.000	1.660
#6F9	62.3	28.9	2.516	2.516	2.475	2.210	1.949	1.678
#6CF1	61.5	29.5	2.512	2.512	2.429	2.240	1.974	1.710
#6FJ6	62.3	35.2	2.505	2.505	2.505	2.376	2.040	1.606
#6DH3	62.3	22.0	2.512	2.512	2.458	2.286	1.948	1.607
#6L1	62.3	37.0	2.512	2.512	2.512	2.335	1.826	1.313
#6DP17	62.3	32.1	2.518	2.518	2.518	2.372	1.834	1.141
#6N1	62.3	37.0	2.514	2.514	2.514	2.278	1.672	1.058
#6DP1	62.3	28.9	2.511	2.511	2.476	2.312	1.748	1.075
#6DH4	62.3	25.5	2.520	2.520	2.440	2.258	1.915	1.575
#6DH7	62.2	28.5	2.516	2.516	2.505	2.316	2.009	1.688
#6DH8	62.2	20.3	2.538	2.538	2.436	2.208	1.827	1.497
#6FL14	62.1	26.7	2.538	2.538	2.538	2.233	1.649	1.218
#6F15	62.2	19.8	2.535	2.538	2.461	2.208	1.979	1.649
#6DP10	62.4	26.5	2.51	2.51	2.44	2.26	1.56	0.89
#6F13	64.2	32.8	2.50	2.46	2.46	2.24	1.97	1.70
#6DL30	64.7	26.3	2.51	2.51	2.45	2.09	1.66	1.24

D-1 through D-7 indicates diameter (mm) at each point.

	A	B	D-1	D-2	D-3	D-4	D-5	D-6	D-7
#7DH5	72.2	27.4	2.98	2.98	2.94	2.78	2.4	2.08	1.72
#7F7	72.3	33.1	2.99	2.99	2.99	2.80	2.54	2.28	2.02
#7F6	72.3	29.0	3.00	3.00	2.95	2.68	2.41	2.14	1.87
#7DH3	72.5	28.1	2.98	2.98	2.96	2.80	2.47	2.11	1.76
#7DH2	75.3	31.6	2.99	2.99	2.99	2.84	2.66	2.27	1.92

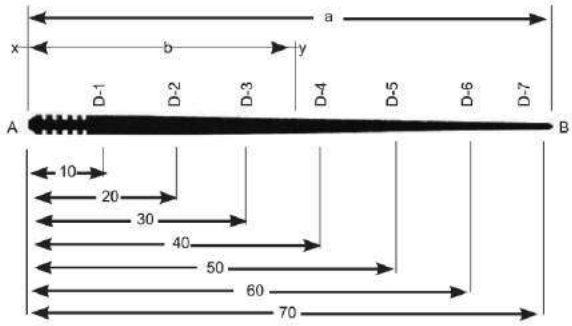

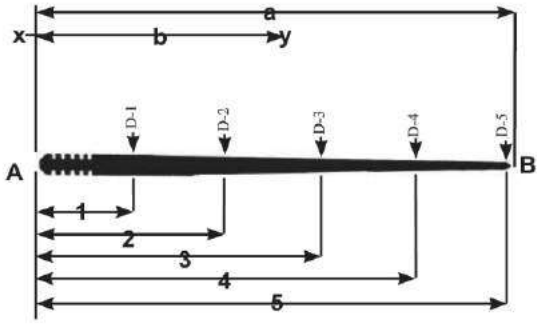

MIKUNI Jet Needles

Jet Needles for Flat Slide Carburetors.

Sold each

Applications: TM36, TM38, 39 Pro-Series, 41 Pro-Series

Jet Needle No.	Needle Diameter before Taper (mm)	Air/Fuel Ratio	Order No.
#6FJ41	2.522	Leaner	002-713
#6FM46	2.522	↑	002-349
#6FJ40	2.522	↓	002-712
#6DP4	2.515	Richer	002-341

Applications: Early Style Flat Slide TMX38

#6EJ12-60	2.60	Leaner	007-077
#6EJ12-59	2.59	↑	007-076
#6EJ12-58	2.58		007-075
#6EJ12-57	2.57		007-074
#6EJ12-56	2.56		007-073
#6EJ12-55	2.55		007-072
#6EJ12-54	2.54	↓	007-071
#6EJ12-53	2.53	Richer	007-070

Applications: Early Style Flat Slide TMX35

#6EN11-58	2.58	Leaner	007-056
#6EN11-57	2.57	↑	007-055
#6EN11-56	2.56		007-054
#6EN11-55	2.55		007-053
#6EN11-54	2.54		007-052
#6EN11-53	2.53		007-051
#6EN11-52	2.52	↓	007-050
		Richer	

Applications: TMS38-77, 78 (125cc)

#6GDY12-59	2.59	Leaner	007-088
#6GDY12-58	2.58	↑	007-087
#6GDY12-57	2.57	↓	007-086
#6GDY12-56	2.56	Richer	007-085

Applications: TMS38-77, 78 (250cc)

#6DGY04-60	2.60	Leaner	007-048
#6DGY04-59	2.59	↑	007-047
#6DGY04-58	2.58		007-046
#6DGY04-57	2.57		007-045
#6DGY04-56	2.56		007-044
#6DGY04-55	2.55	↓	007-043
#6DGY04-54	2.54	Richer	007-042

Applications: RS34, RS36 Smoothbore

#9DZH05-50	2.50	Leaner	007-108
#9DZH03	2.49	↑	007-037
#9DZH04	2.48	Richer	007-038

Applications: RS38, RS40 Smoothbore

#9CHY03 **(Std)**	2.99	Leaner	007-020
#9CHY05	2.98	↑	007-022
#9CHY06	2.97	Richer	007-023

Jet Needles for Flat Slide Carburetors.

Sold each

Applications: HSR42

Jet Needle No.	Needle Diameter before Taper (mm)	Air/Fuel Ratio	Order No.
#8DDY01-98	2.98	Leaner	007-083
#8DDY01-97 **(Std)**	2.97	↑	007-082
#8DDY01-96	2.96	↓	007-081
#8DDY01-95	2.95	Richer	007-080

Applications: HSR45

#8CFY02-98	2.98	Leaner	007-103
#8CFY02-97 **(Std)**	2.97	↑	007-102
#8CFY02-96	2.96	↓	007-101
#8CFY02-95	2.95	Richer	007-100

Applications: HSR48

#8CFY15-98	2.98	Leaner	007-098
#8CFY15-97 **(Std)**	2.97	↑	007-097
#8CFY15-96	2.96	↓	007-096
#8CFY15-95	2.95	Richer	007-095

Applications: TM36-68 Pumper Carb

#9DZH06-50 **(Std)**	2.50	Leaner	007-109
#9EBY01-51	2.51		007-106
#9EBY01-50	2.50	Richer	007-105

When using these Jet Needles **007-105** & **007-106**, the use of a larger pilot jet may be required.

Applications: HS40 (TM40-6) Pumper Carb

Mikuni No.	Diameter	Order No.	
#9DJY01	2.97	Leaner	007-015
#9DJY03/ 9DJY04 **(Std)**	2.96	↑	007-017
#9DJY02	2.95	Richer	007-016

RS34-RS36	VM20/369	002-083
RS38-RS40	BS32/126	002-455
HS40, TM36, TM40	BS32/126	002-455
All HSR42/45/48	BS32/126	002-455
TMS38	BS32/126	002-455
TMX35, TMX38	BS32/126	002-455

Photo courtesy of Bonneville Performance
#35 Kyle Ragsdale

Jet Needles for VM, TM, and RS Carburetors

Sold each.

#4 Series: VM18, VM20, VM22, VM24 Flange

Mikuni No.	Order No.	Application, Std.
#4D10	002-243	
#4D20	002-244	VM22-133 **(Std.)**
#4DH7	002-245	Suzuki GT380 74-77
#4DH11	002-246	
#4DH22	002-247	
#4F15	002-254	
#4J11	002-256	
#4J13	002-257	VM20-273 **(Std.)**
#4L6	002-258	

#5 Series: VM24 - VM32 Spigot
VM28 - VM34 Flange, TM24, TM32, TM34

Mikuni No.	Order No.	Application, Std.
#5DI20	002-267	
#5DL31	002-268	
#5DP7	002-271	
#5DP10	002-272	
#5DP39	002-273	VM28-418 (TM28) **(Std.)**
#5E75	007-005	VM26-606 Side Choke **(Std.)**
#5EL9	002-279	
#5EP6	002-280	
#5F3	002-281	
#5F12	002-283	
#5F21	002-287	VM26-8074 **(Std.)**
#5FL14	002-291	
#5FP17	007-001	TM32-1 **(Std.)** TM34-2 **(Std.)**
#5I14	007-006	VM24-512 **(Std.)**
#5J11	007-003	
#5L1	002-297	Yamaha RD400 76-78
#5N13	007-002	TM24-8001 **(Std.)**

#5 Series: TM33-8012 Pumper Carb

#5FP96	007-004	TM33-8012 **(Std.)**
#5FP96	007-004	DR350 (90-99) w/TM33

Sudco Carburetor Needle Shims

Sold 12 piece package.

Description	Dimensions - Inside, Outside, Thickness	Order No.
Most Keihin	.126" I.D. x .275" O.D. x.020" (0.5mm) thick	009-396
Most Mikuni	.106" I.D. x .250" O.D. x.020" (0.5mm) thick	009-395

Jet Needles for VM, TM, and RS Carburetors

Sold each.

#6 Series: VM30 -VM38 Spigot

Mikuni No.	Order No.	Application , Std.
#6DH2	002-299	
#6DH3	002-300	
#6DH4	002-301	VM34-168, VM34-275, **(Std.)**
#6DH7	002-302	
#6DH8	002-303	
#6DJ30	002-340	
#6DP1	002-304	VM38-9 **(Std.)**
#6DP4*	002-341	
#6DP17	002-309	VM32-193, VM32-33 **(Std.)**
#6F4	002-312	
#6F5	002-313	VM30-83 **(Std.)**
#6F8	002-314	
#6F9	002-315	
#6F13	002-316	
#6F15	002-317	
#6F16	002-318	
#6F21	002-319	
#6FJ6	002-321	VM36-4 **(Std.)**
#6FJ40*	002-712	TM36-2 **(Std.)**
#6FJ41*	002-713	TM38-85, TM38-86 **(Std.)**
#6FJ41*	002-713	TM39/TM41 Pro **(Std.)**
#6FL14	002-324	
#6FL25	002-344	
#6FL52	002-343	Kawasaki 16009-1226
#6J1	002-325	
#6L1	002-327	
#6FM46*	002-349	
#6N1	002-328	

*** For TM36, TM38, TM39/TM41 Pro-Series.**

#7 Series: VM40 - VM44 Spigot

Mikuni No.	Order No.	Application, Std.
#7DH2	002-332	
#7DH3	002-336	
#7DH5	002-345	
#7E1	002-334	
#7F6	002-329	
#7F7	002-333	VM44-3 **(Std.)**

#9 Series: RS34, RS36 Smoothbore

Mikuni No.	Order No.	Application, Std.
#9DZH05-50	007-108	
#9DZH03	007-037	
#9DZH04	007-038	

#9 Series - RS38, RS40 Smoothbore

Mikuni No.	Order No.	Application, Std.
#9CHY03	007-020	
#9CHY05	007-022	
#9CHY06	007-023	

Jet Needle E-Ring (Clip)

Application	Mikuni No.	Order No.
HS40, TM36, TM40	BS32/126	002-455
HSR42/45/48	BS32/126	002-455
RS34-RS36	VM20/369	002-083
RS38-RS40	BS32/126	002-455
TM24 - TM38	VM20/369	002-083
TM33 Pumper	VM20/369	002-083
VM18 clamp-on	VM20/369	002-083
VM26 - VM38	VM20/369	002-083
VM29 Smoothbore	VM20/369	002-083
VM33 Smoothbore	VM20/369	002-083
VM40 - VM44 spigot	BS32/126	002-455

MIKUNI Needle Jets

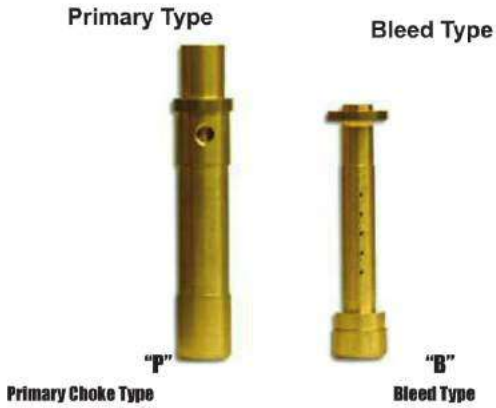

Two Basic Types of Needle Jets

Needle Jets

The needle jet is the main fuel passage to the main bore (venturi) of the Mikuni carburetor. Depending on the inside diameter of a specific needle jet, this will also effect the function of the needle. Therefore, needle jets and jet needles act together as the main system in controlling the amount and mixture of the fuel which is drawn in mid-range (1/4 - 3/4) throttle operation.

On the following application chart, it is noted that certain needle jets require a specific type of main jet because there are two types of main jets (4/042 Large Hex & N100.604 Large Round) that have different fuel flow rate characteristics. Also, needle jets are available not only in types, but series and sizes. Mikuni series numbers for style of the needle jet. There sizes (inside diameter size) within each series are listed according to a letter-number combination.

The letter shows the inside diameter size in increments of .050mm. For

example, the difference between P-2 and Q-2 is that the inside diameter of needle jet size Q-2 is .050mm greater than P-2.

The number shows the inside diameter size in increments of .005mm For example, the difference between P-2 and P-4 is that the inside diameter of needle jet size P-4 is .01mm greater than P-2.

Exception: (-5) is measured as an increment increase of .005mm. For example, the difference between P-4 and P-5 is that the inside diameter of needle jet size P-5 is .005mm greater then P-4.

Needle Jets

Lean to Rich Chart

Size	
N-0	Lean
N-2	
N-4	
N-6	
N-8	
O-0	
O-2	
O-4	
O-5	
O-6	
O-8	
P-0	
P-2	
P-4	
P-5	
P-6	
P-8	
Q-0	
Q-2	
Q-4	
Q-5	
Q-6	
Q-8	
R-0	
R-2	
R-4	
R-6	Rich

224 Series Needle Jet

Note: Letters Z, AA, BB and CC are sizes in increments of .050mm. Numbers 0 and 5 are sizes in increments of .025mm.

Size	#224 (VM44/10) Series	Lean
Z-0	003-495	
Z-5	003-496	
AA-0	003-497	
AA-5	003-498	
BB-0	003-499	
BB-5	003-500	
CC-0	003-501	
CC-5	003-502	Rich

723 Series Needle Jet

Size	723 Series	Lean
Y-2	003-685	
Y-4	003-686	
Y-6	003-687	
Y-8	003-688	
Z-0	003-689	Rich

Needle Jet Series

Series	Size	Type	Carb Application
159	N-4 thru R-8	P	VM30 - VM36mm Spigot
166(=480)	O-0 thru R-8	P	VM38mm Spigot
169(=172)	O-0 thru R-8	P	VM28 - VM30mm small body
171	N-0 thru Q-8	P	VM30mm Flange
175	N-0 thru Q-8	B	VM28mm Spigot, TM28 Flat
176(=270)	N-0 thru Q-8	B	VM30 - VM36mm Spigot
182	N-0 thru Q-8	P	VM26mm Spigot
183	N-0 thru Q-8	B	
188	O-2 thru P-8	P	VM32 Flange, Kawasaki
192	N-0 thru Q-8	P	VM26 Flange
193	N-0 thru Q-8	P	VM24 Flange
196	O-0 thru Q-5	P	
205	O-0 thru Q8	P	VM34mm Flange
211	N-0 thru Q-8	P	Kawasaki KR250/350/750
224	Z-0 thru CC-5	P	VM40 - VM44mm Spigot
247	P & Q only	P	Yamaha early YZ250, YZ400, IT400
247	P-0 thru R-8	P	
258	O & P only	B	Kawasaki KZ650/1000 w/VM carbs, Suzuki DR, SP, GS550,GS750/850 Yamaha SR500, TT500, XT500
258	O-0 thru P-8	B	
261	0-2 thru P-8	B	VM29 & VM33 Smoothbore
332	O-0 only	B	VM26-606 with side choke, Flange
389	Q-0 thru R-8	P	TM32, 34, 36, 38, 41 Pro & Flat Slide
454	P-8 thru Q-0	B	TM24 Flat Slide
499	P-2 thru Q-4	B	TM33 Flat Slide
568	O-6 thru P-8	P	RS34, RS36, TM36
568	Y-O thru Z-6	P	RS38 - RS40, HS40, TM40
633	S-4 thru S-9	P	OEM TMX (Late Style)
Note: 633 Series not shown in chart, see page 191.			
640	P-4 thru Q-2	B	TM33-8012 Flat Slide, Pumper
723	Y-2 thru Z-0	P	HSR42-48 Roller Flat Slide

Needle Jet Orifice Diameters

Size	-0	-1	-2	-3	-4	-5	-6	-7	-8	-9
N	2.550	2.555	2.560	2.565	2.570	2.575	2.580	2.585	2.590	2.595
O	2.600	2.605	2.610	2.616	2.620	2.625	2.630	2.635	2.640	2.645
P	2.650	2.655	2.660	2.665	2.670	2.675	2.680	2.686	2.690	2.695
Q	2.700	2.705	2.710	2.715	2.720	2.725	2.730	2.735	2.740	2.745

MIKUNI Needle Jets

Size	159 Series	166(=480) Series	169(=172) Series	171 Series	175 Series	176(=270) Series	182 Series	183 Series	188 Series	192 Series	193 Series	
N-0	—	—	003-249	003-271	—	003-324	003-352	003-372	—	—	—	Lean
N-2	—	—	003-250	003-272	—	003-325	003-353	003-373	—	—	—	
N-4	003-200	—	003-251	003-273	—	—	—	003-374	—	—	—	
N-6	—	—	003-252	003-274	—	—	003-355	003-375	—	—	—	
N-8	003-202	—	003-253	003-275	—	—	003-356	003-376	—	—	003-428	
O-0	003-203	003-227	003-254	003-276	—	003-329	003-357	003-377	—	—	—	
O-2	003-204	003-228	003-255	003-277	—	003-330	003-358	003-378	003-394	003-413	—	
O-4	003-205	003-229	003-256	003-278	003-306	003-331	003-359	003-379	003-395	—	—	
O-5	003-543	003-545	003-257	—	—	—	—	—	—	—	—	
O-6	003-206	003-230	003-258	—	003-307	003-333	—	003-381	—	—	003-432	
O-8	003-207	003-231	003-259	003-280	003-308	003-334	003-361	003-382	003-398	—	003-433	
P-0	003-208	003-232	003-260	003-281	003-309	—	003-362	003-383	003-399	003-419	003-434	
P-2	003-209	003-233	003-261	003-282	003-310	003-336	003-363	003-384	—	003-420	003-435	
P-4	003-210	003-234	003-262	003-283	003-311	003-337	—	003-385	—	003-421	003-436	
P-5	003-211	003-235	003-263	—	003-312	—	—	—	—	—	—	
P-6	003-212	003-236	003-264	003-284	003-313	003-339	003-365	003-386	—	003-422	003-437	
P-8	003-213	003-237	003-265	003-285	003-314	003-340	003-366	003-387	003-404	003-423	003-438	
Q-0	003-214	003-238	003-266	003-286	003-315	—	003-367	003-388	—	—	—	
Q-2	003-215	003-239	003-267	003-287	—	—	003-368	003-389	—	—	—	
Q-4	003-216	003-240	003-268	003-288	—	—	003-369	003-390	—	—	—	
Q-5	003-217	003-546	003-547	—	—	—	—	—	—	—	—	
Q-6	003-218	003-241	003-269	003-289	—	—	003-370	003-391	—	—	—	
Q-8	003-219	003-242	003-270	003-290	—	—	003-371	003-392	—	—	—	
R-0	003-220	003-243	—	003-291	—	—	—	—	—	—	—	
R-2	003-221	003-244	—	—	—	—	—	—	—	—	—	
R-4	003-223	003-245	—	—	—	—	—	—	—	—	—	
R-5	003-224	003-246	—	—	—	—	—	—	—	—	—	
R-6	003-225	003-247	—	—	—	—	—	—	—	—	—	
R-8	003-226	003-248	—	—	—	—	—	—	—	—	—	Rich

Size	196 Series	205 Series	211 Series	247 Series	258 Series	261 Series	332 Series	389 Series	454 Series	499 Series	568 Series	640 Series	
N-0	—	—	003-474	—	—	—	—	—	—	—	—	—	Lean
N-2	—	—	003-475	—	—	—	—	—	—	—	—	—	
N-4	—	—	003-476	—	—	—	—	—	—	—	—	—	
N-6	—	—	003-477	—	—	—	003-735	—	—	—	—	—	
N-8	—	—	003-478	—	—	—	—	—	—	—	—	—	
O-0	003-439	003-457	003-479	—	003-522	—	—	003-570	—	—	—	—	
O-2	003-440	003-458	003-480	—	003-523	—	—	003-571	—	—	—	—	
O-4	003-441	003-459	003-481	—	003-524	003-534	—	003-572	—	—	—	—	
O-5	003-442	003-460	—	—	—	—	—	—	—	—	—	—	
O-6	003-443	003-461	003-482	—	003-525	003-535	—	003-573	—	—	003-650	—	
O-8	—	003-462	003-483	—	003-526	003-536	—	003-574	—	—	003-651	—	
P-0	—	003-463	003-484	003-510	003-527	003-537	—	003-575	—	—	003-652	—	
P-2	—	—	003-485	003-511	003-528	003-538	—	003-576	—	003-606	003-653	—	
P-4	—	003-465	003-486	003-512	003-529	003-539	—	003-577	—	—	003-654	003-698	
P-5	003-448	—	—	003-513	—	—	—	—	—	—	—	—	
P-6	—	003-466	003-487	003-514	003-530	—	—	003-578	—	—	003-655	003-699	
P-8	003-450	003-467	003-488	003-515	003-531	003-549	—	003-579	003-679	003-609	003-656	003-700	
Q-0	003-451	003-468	003-489	003-516	—	—	—	003-580	003-680	003-610	—	003-701	
Q-2	003-452	003-469	003-490	003-517	—	—	—	003-581	—	003-611	—	003-702	
Q-4	—	003-470	003-491	003-518	—	—	—	003-582	—	003-612	—	—	
Q-5	003-454	003-471	—	003-519	—	—	—	—	—	—	—	—	
Q-6	—	003-472	003-492	003-520	—	—	—	003-583	—	—	—	—	
Q-8	—	003-473	003-493	003-521	—	—	—	003-584	003-681	—	—	—	
R-0	—	—	—	003-553	—	—	—	003-585	—	—	—	—	
R-2	—	—	—	003-554	—	—	—	003-586	—	—	—	—	
R-4	—	—	—	003-555	—	—	—	003-587	—	—	—	—	
R-5	—	—	—	—	—	—	—	—	—	—	—	—	
R-6	—	—	—	003-556	—	—	—	003-588	—	—	—	—	
R-8	—	—	—	003-557	—	—	—	003-589	—	—	—	—	
Y-0	—	—	—	—	—	—	—	—	—	—	003-663	—	
Y-2	—	—	—	—	—	—	—	—	—	—	003-664	—	
Y-4	—	—	—	—	—	—	—	—	—	—	003-665	—	
Y-6	—	—	—	—	—	—	—	—	—	—	003-666	—	
Y-8	—	—	—	—	—	—	—	—	—	—	003-667	—	
Z-0	—	—	—	—	—	—	—	—	—	—	003-668	—	
Z-2	—	—	—	—	—	—	—	—	—	—	003-669	—	
Z-4	—	—	—	—	—	—	—	—	—	—	003-670	—	
Z-6	—	—	—	—	—	—	—	—	—	—	003-671	—	Rich

MIKUNI VM Roundslide Throttle Valves

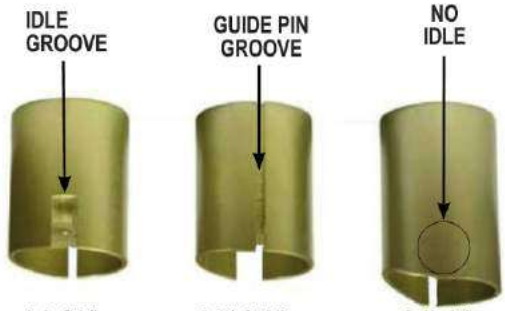

1: Left Idle 2: Right Idle 3: No Idle

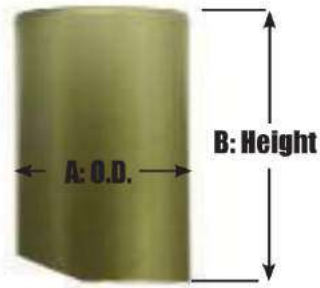

Throttle Valve (Slides)

The Throttle Valve (slide) affects the air-fuel mixture ratio between 1/8 and 1/2 throttle, and especially between 1/8 and 1/4 throttle. Throttle Valves come in various sizes called cutaway. The larger the cutaway (size), the leaner the fuel mixture. The smaller the cutaway (size), the richer the mixture. Throttle Valves are sold each.

Application	Cutaway	Composition (Material)	Idle Groove Position	Guide Pin Position	Guide Pin Groove Type	Dimension	G. Grv. Width	Mikuni No.	Order No.
VM26 & VM28 Spigot	1.0	Brass	Left	Right	Narrow	A=30mm,B=33.5mm	2.05	VM28/56	003-009
VM26 & VM28 Spigot	1.5	Brass	Left	Right	Narrow	A=30mm, B=33.5mm	2.05	VM28/56	003-010
VM26 & VM28 Spigot	2.0	Brass	Left	Right	Narrow	A=30mm, B=33.5mm	2.05	VM28/56	003-011
VM26 & VM28 Spigot	2.5	Brass	Left	Right	Narrow	A=30mm, B=33.5mm	2.05	VM28/56	003-012
VM28 Clamp-On	2.0	Aluminum	Left	Right	Narrow	A=31.5mm,B=40.5mm	2.05	VM28/19	003-022
VM28 Clamp-On	3.5	Aluminum	Left	Right	Narrow	A=31.5mm, B=40.5mm	2.05	VM28/19	003-025
VM28 Clamp-On and:									
VM24 & VM30 Flange	0.5	Aluminum	Left	Right	Narrow	A=31.5mm, B=40.5mm	2.05	VM28/80	003-026
VM24 & VM30 Flange	1.0	Aluminum	Left	Right	Narrow	A=31.5mm, B=40.5mm	2.05	VM28/80	003-027
VM24 & VM30 Flange	2.0	Aluminum	Left	Right	Narrow	A=31.5mm, B=40.5mm	2.05	VM28/80	003-029
VM24 & VM30 Flange	2.5	Aluminum	Left	Right	Narrow	A=31.5mm, B=40.5mm	2.05	VM28/80	003-030
VM24 & VM30 Flange	3.5	Aluminum	Left	Right	Narrow	A=31.5mm, B=40.5mm	2.05	VM28/80	003-032
VM28 Clamp-On and:									
VM28 & VM30 Flange	0.5	Aluminum	Right	Left	Narrow	A=31.5mm, B=40.5mm	2.05	VM28/81	003-033
VM28 & VM30 Flange	1.0	Aluminum	Right	Left	Narrow	A=31.5mm, B=40.5mm	2.05	VM28/81	003-034
VM28 & VM30 Flange	1.5	Aluminum	Right	Left	Narrow	A=31.5mm, B=40.5mm	2.05	VM28/81	003-035
VM28 & VM30 Flange	2.0	Aluminum	Right	Left	Narrow	A=31.5mm, B=40.5mm	2.05	VM28/81	003-036
VM28 & VM30 Flange	3.0	Aluminum	Right	Left	Narrow	A=31.5mm, B=40.5mm	2.05	VM28/81	003-038
VM28 & VM30 Flange	3.5	Aluminum	Right	Left	Narrow	A=31.5mm, B=40.5mm	2.05	VM28/81	003-039
VM24 & VM30 Flange	1.5	Aluminum	———	Right	Narrow	A=31.5mm, B=40.05mm	2.05	VM28/90	003-040
VM24 & VM30 Flange	3.0	Aluminum	———	Right	Narrow	A=31.5mm, B=40.05mm	2.05	VM28/90	003-044
Kaw. Z1/A-900 (73-74)	1.0	Aluminum	———	Right	Narrow	A=31.5mm, B=47.05mm	1.98	VM28/210	003-052
Kaw. Z1/A-900 (73-74)	2.5	Aluminum	———	Right	Narrow	A=31.5mm, B=47.05mm	1.98	VM28/210	003-055
Kaw. Z1/A-900 (73-74)	3.0	Aluminum	———	Right	Narrow	A=31.5mm, B=47.05mm	1.98	VM28/210	003-056
Kaw. KZ900 (76-77) and:									
Kaw. Z1B-900 (1975)	1.0	Aluminum	———	Right	Narrow	A=31.5mm, B=47.5mm	1.98	VM28/490	003-057
Kaw. Z1B-900 (1975)	1.5	Aluminum	———	Right	Narrow	A=31.5mm, B=47.5mm	1.98	VM28/490	003-058
Kaw. Z1B-900 (1975)	2.0	Aluminum	———	Right	Narrow	A=31.5mm, B=47.5mm	1.98	VM28/490	003-059
Kaw. Z1B-900 (1975)	2.5	Aluminum	———	Right	Narrow	A=31.5mm, B=47.5mm	1.98	VM28/490	003-060
VM28 Clamp-On and:									
VM28 & VM30 Flange	2.5	Brass	Left	Right	Narrow	A=31.5mm, B=40.5mm	2.05	VM30/120	003-063
VM28 & VM30 Flange	3.5	Brass	Left	Right	Narrow	A=31.5mm, B=40.5mm	2.05	VM30/120	003-172
VM32, VM34 Flange and:									
VM30, 32, 34 Spigot	1.0	Aluminum	———	Right	Narrow	A=35.5mm, B=37.5mm	2.05	VM32/06	003-065
VM30, 32, 34 Spigot	1.5	Aluminum	———	Right	Narrow	A=35.5mm, B=37.5mm	2.05	VM32/06	003-066
VM32, VM34 Flange and:									
VM30, 32, 34 Spigot	0.5	Aluminum	Left	Right	Narrow	A=35.5mm, B=40.5mm	2.05	VM32/22	003-070
VM30, 32, 34 Spigot	1.5	Aluminum	Left	Right	Narrow	A=35.5mm, B=40.5mm	2.05	VM32/22	003-072
VM30, 32, 34 Spigot	3.0	Aluminum	Left	Right	Narrow	A=35.5mm, B=40.5mm	2.05	VM32/22	003-075
VM32, VM34 Flange and:									
VM30, 32, 34 Spigot	3.5	Aluminum	Right	Left	Narrow	A=35.5mm, B=40.5mm	2.05	VM32/23	003-082

MIKUNI VM Roundslide Throttle Valves

Application	Cutaway	Composition (Material)	Idle Groove Position	Guide Pin Position	Guide Pin Groove Type	Dimension	G. Grv. Width	Mikuni No.	Order No.
VM30, 32, 34 Spigot	2.0	Brass	Right	Left	Wide	A=35.5mm, B=40mm	2.60	VM32/65	003-084
VM30, 32, 34 Spigot	2.5	Brass	Right	Left	Wide	A=35.5mm, B=40mm	2.60	VM32/65	003-085
VM30, 32, 34 Spigot	3.0	Brass	Right	Left	Wide	A=35.5mm, B=40mm	2.60	VM32/65	003-086
VM30 Small Body Spigot	1.5	Brass	Left	Right	Wide	A=31.5mm, B=44.5mm	2.05	VM30/176	003-088
VM30 Small Body Spigot	2.0	Brass	Left	Right	Wide	A=31.5mm, B=44.5mm	2.05	VM30/176	003-089
VM30 Small Body Spigot	2.5	Brass	Left	Right	Wide	A=31.5mm, B=44.5mm	2.05	VM30/176	003-090
VM30 Small Body Spigot	3.0	Brass	Left	Right	Wide	A=31.5mm, B=44.5mm	2.05	VM30/176	003-091
VM32, VM34 Flange and:									
VM30, 32, 34, Spigot	1.0	Brass	Left	Right	Wide	A=35.5mm, B=40.5mm	2.60	VM34/110	003-098
VM30, 32, 34, Spigot	1.5	Brass	Left	Right	Wide	A=35.5mm, B=40.5mm	2.60	VM34/110	003-099
VM30, 32, 34, Spigot	2.0	Brass	Left	Right	Wide	A=35.5mm, B=40.5mm	2.60	VM34/110	003-100
VM30, 32, 34, Spigot	2.5	Brass	Left	Right	Wide	A=35.5mm, B=40.5mm	2.60	VM34/110	003-101
VM30, 32, 34, Spigot	3.0	Brass	Left	Right	Wide	A=35.5mm, B=40.5mm	2.60	VM34/110	003-102
VM30, 32, 34, Spigot	3.5	Brass	Left	Right	Wide	A=35.5mm, B=40.5mm	2.60	VM34/110	003-103
VM30, 32, 34, Spigot	2.0	Brass	Left	Right	Wide	A=35.5mm, B=40.5mm	2.60	VM34/354	003-177
VM30, 32, 34, Spigot	2.5	Brass	Left	Right	Wide	A=35.5mm, B=40.5mm	2.60	VM34/354	003-178
VM36 Spigot	0.5	Brass	Left	Right	Narrow	A=38mm, B=46mm	2.05	VM36/13	003-104
VM36 Spigot	1.0	Brass	Left	Right	Narrow	A=38mm, B=46mm	2.05	VM36/13	003-105
VM36 Spigot	1.5	Brass	Left	Right	Narrow	A=38mm, B=46mm	2.05	VM36/13	003-106
VM36 Spigot	3.0	Brass	Left	Right	Narrow	A=38mm, B=46mm	2.05	VM36/13	003-109
VM36 Spigot	3.5	Brass	Left	Right	Narrow	A=38mm, B=46mm	2.05	VM36/13	003-110
VM36 Spigot	3.5	Brass	Right	Left	Narrow	A=38mm, B=46mm	2.05	VM36/18	003-116
VM36 Spigot	3.5	Brass	Right	Left	Narrow	A=38mm, B=46mm	2.60	VM36/26	003-121
VM36 Spigot	1.0	Brass	Left	Right	Wide	A=38mm, B=45.5mm	3.05	VM36/36	003-123
VM36 Spigot	1.5	Brass	Left	Right	Wide	A=38mm, B=45.5mm	3.05	VM36/36	003-124
VM36 Spigot	2.0	Brass	Left	Right	Wide	A=38mm, B=45.5mm	3.05	VM36/36	003-125
VM36 Spigot	2.5	Brass	Left	Right	Wide	A=38mm, B=45.5mm	3.05	VM36/36	003-126
VM36 Spigot	3.0	Brass	Left	Right	Wide	A=38mm, B=45.5mm	3.05	VM36/36	003-127
VM36 Spigot	3.5	Brass	Left	Right	Wide	A=38mm, B=45.5mm	3.05	VM36/36	003-128
VM36 Spigot	1.0	Brass	Right	Left	Wide	A=38mm, B=45.5mm	3.05	VM36/39	003-179
VM36 Spigot	2.5	Brass	Right	Left	Wide	A=38mm, B=45.5mm	3.05	VM36/39	003-182
VM36 Spigot	3.0	Brass	Right	Left	Wide	A=38mm, B=45.5mm	3.05	VM36/39	003-183
VM36 Spigot	1.5	Brass	Left	Right	Wide	A=38mm, B=46mm	3.05	VM36/113	003-199
VM36 Spigot	2.0	Brass	Left	Right	Wide	A=38mm, B=46mm	3.05	VM36/113	003-195
VM38 Spigot	1.0	Brass	Right	Left	Narrow	A=39.5mm, B=45mm	2.05	VM38/02	003-130
VM38 Spigot	3.0	Brass	Right	Left	Narrow	A=39.5mm, B=45mm	2.05	VM38/02	003-186
VM38 Spigot	3.5	Brass	Right	Left	Narrow	A=39.5mm, B=45mm	2.05	VM38/02	003-187
VM38 Spigot	3.5	Brass	Left	Right	Narrow	A=39.5mm, B=45.5mm	2.05	VM38/10	003-140
VM38 Spigot	0.5	Brass	Right	Left	Wide	A=39.5mm, B=45.5mm	3.05	VM38/22	003-188
VM38 Spigot	1.0	Brass	Right	Left	Wide	A=39.5mm, B=45.5mm	3.05	VM38/22	003-189
VM38 Spigot	1.5	Brass	Right	Left	Wide	A=39.5mm, B=45.5mm	3.05	VM38/22	003-190
VM38 Spigot	2.5	Brass	Right	Left	Wide	A=39.5mm, B=45.5mm	3.05	VM38/22	003-191
VM38 Spigot	3.0	Brass	Right	Left	Wide	A=39.5mm, B=45.5mm	3.05	VM38/22	003-192
VM38 Spigot	1.5	Brass	Right	Left	Wide	A=39.5mm, B=45mm	3.05	VM38/24	003-143
VM38 Spigot	2.0	Brass	Right	Left	Wide	A=39.5mm, B=45mm	3.05	VM38/24	003-144
VM38 Spigot	2.5	Brass	Right	Left	Wide	A=39.5mm, B=45mm	3.05	VM38/24	003-145
VM38 Spigot	3.0	Brass	Right	Left	Wide	A=39.5mm, B=45mm	3.05	VM38/24	003-146
VM38 Spigot	3.5	Brass	Right	Left	Wide	A=39.5mm, B=45mm	3.05	VM38/24	003-147
VM38 Spigot	2.0	Brass	Left	Right	Wide	A=39.5mm, B=45mm	3.05	VM38/52	003-149
VM38 Spigot	2.5	Brass	Left	Right	Wide	A=39.5mm, B=45mm	3.05	VM38/52	003-150
VM38 Spigot	3.0	Brass	Left	Right	Wide	A=39.5mm, B=45mm	3.05	VM38/52	003-151
VM38 Spigot	1.5	Aluminum	———	Right	Wide	A=39.5mm, B=45.5mm	3.05	VM38/76	003-196
VM38 Spigot	2.0	Brass	Left	Right	Wide	A=38mm, B=46.5mm	3.05	VM38/76	003-197A
VM38 Spigot	3.0	Brass	Left	Right	Wide	A=38mm, B=46.5mm	3.05	VM38/76	003-197
VM40 & VM44 Spigot	1.0	Aluminum	Left	Right	Wide	A=46mm, B=55.5	3.05	VM40/02	003-154
VM40 & VM44 Spigot	1.5	Aluminum	Left	Right	Wide	A=46mm, B=55.5	3.05	VM40/02	003-155
VM40 & VM44 Spigot	2.0	Aluminum	Left	Right	Wide	A=46mm, B=55.5	3.05	VM40/02	003-156
VM40 & VM44 Spigot	2.5	Aluminum	Left	Right	Wide	A=46mm, B=55.5	3.05	VM40/02	003-157
VM40 & VM44 Spigot	3.0	Aluminum	Left	Right	Wide	A=46mm, B=55.5	3.05	VM40/02	003-158
VM40 & VM44 Spigot	1.5	Brass	Left	Right	Wide	A=46mm, B=56mm	3.05	VM44/23	003-162
VM40 & VM44 Spigot	2.0	Brass	Left	Right	Wide	A=46mm, B=56mm	3.05	VM44/23	003-163
VM40 & VM44 Spigot	2.5	Brass	Left	Right	Wide	A=46mm, B=56mm	3.05	VM44/23	003-164
VM40 & VM44 Spigot	3.0	Brass	Left	Right	Wide	A=46mm, B=56mm	3.05	VM44/23	003-165
VM40 & VM44 Spigot	3.5	Brass	Left	Right	Wide	A=46mm, B=56mm	3.05	VM44/23	003-166

MIKUNI Needle Valve Assemblies

VM28/511 Viton Tip
VM34/39 Metal Tip

Size 511: 1.5, 1.8, 2.0, 2.5 Size: 39: 1.5, 2.5, 3.0, 3.3, 3.5 App: VM30-40

VM28/163 Metal Tip

Size: 1.0, 1.2, 1.5, 1.8, 2.0, 2.5, 3.0 App: VM30-44

VM38/11 Metal Tip (6 hole)

Size: 3.3, 3.5 App: VM30-44

VM26/26 Metal Tip

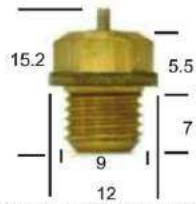

Size: 1.0, 1.2, 1.5, 1.8, 2.0, 2.3, 2.5, 2.8 App: VM26, VM28 BN34, 38, 44

786-46001 Metal Tip

Size: 1.2, 1.5, 1.8, 2.0, 3.0, 3.3, 3.5 App:TM32, 34, 36, 38 Flatslide

VM24/557 Metal Tip

Size: 1.5, 2.0, 2.5 App: TM28 Flatslide

990-786-044

Size: 3.8 App: HS40

786-35015 Viton Tip

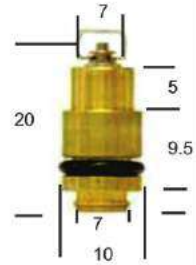

Size: 1.5, 1.8, 2.0, 2.3, 2.5 App: Super BN/ 38, 44, 46

786-15005 Viton Tip

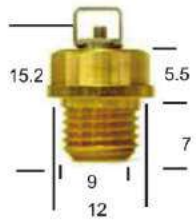

Size: 1.5, 2.0, 2.5 App: BN34, 38, 44

N149.040 Metal Tip (Need O-Ring KV/10)

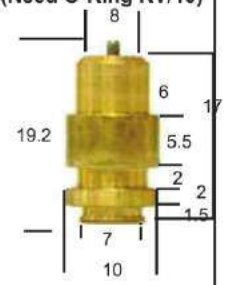

Size: 2.0, 2.5, 2.8 App: RS34-40

VM15/172 Metal Tip

Size: 1.2, 1.5, 1.8, 2.0 App: VM18, VM20

786-27001 Viton Tip

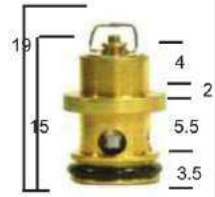

Size: 1.5, 2.3, 3.5, 4.2 HSR42, 45, 48

N133.200 Viton Tip

Size: 1.2, 1.5, 1.8, 2.0, 2.3 App: TM33, OEM Snowmobiles

786-35018 Viton Tip

Size: 1.5, 2.0, 2.3, 2.5 App: BNI 46

786-36004-A

Size: 1.8 App: TMX35, 38

786-36004

Size: 3.5 App: TMX35, 38

Genuine Mikuni Needle Valve Assemblies

Screw-in type includes Needle Valve and Needle Seat.(Washer not included) Push-in type includes Needle Valve, Needle Seat O-Ring for Needle Seat (except RS Series) and Needle Valve Clip where applicable. ***Made in Japan.*** Order by Sudco part number.

Applications: VM16, VM18 & VM20mm

Size	Application	Mikuni No.	Order No.
(1.5)	Std for VM16,18 & 20mm	VM15/172	007-288
(2.0)		VM15/172	007-289
	Washer for Needle Valve Seat	VM15/07	007-286

Applications: VM22mm - VM30mm Flange, VM24-512 Spigot, VM26 & VM28mm Round Spigot, VM30 Small Body
Round Pump Carb BN34, BN38 & BN44mm Watercraft

Size	Application	Mikuni No.	Order No.
(1.0)		VM26/26	002-230
(1.2)		VM26/26	002-234
(1.5)		VM26/26	002-231
(1.5)	Viton Tip	VM26/185	002-232
(2.0)		VM26/26	002-189
(2.5)		VM26/26	002-190
(2.8)		VM26/26	002-191
	Washer for Needle Valve Seat	VM26/25	002-188

Applications: VM32 & VM34mm Flange
VM30 - VM44mm Spigot

Size	Application	Mikuni No.	Order No.
(3.0)		VM34/39	002-192
(3.3)		VM34/39	002-193
(1.2)		VM28/163	002-195
(1.5)		VM28/163	002-196
(1.8)		VM28/163	002-197
(2.0)		VM28/163	002-187
(2.5)		VM28/163	002-199
	Washer for Needle Valve Seat	B34/52	002-187
(3.5)		VM38/11	002-200
(3.5)	OEM Yamaha 24X-14107-35-00	VM38/11	002-200

Applications: VM30 - VM44mm - Snowmobile OEM (With viton tip needle)

Size	Application	Mikuni No.	Order No.
(1.5)		VM28/511	002-233
(1.8)		VM28/511	002-895
(2.0)		VM28/511	002-896

Genuine Mikuni Needle Valve Assemblies (cont.)

Applications: TM24, TM28 Flat Slide

Size	Application	Mikuni No.	Order No.
(1.5)	Std on TM24	VM24/557A	002-842
(2.0)		VM24/557A	002-841
(2.5)	Std on TM28	VM24/557A	002-840
	O-Ring for Needle Valve Seat	VM24/559	002-838

Applications: TM32, TM34, TM36, TM38 Flat Slide 39 & 41 Pro (No Accelerator Pump on carburetor)

Size	Application	Mikuni No.	Order No.
(1.5)		786-46001	002-703
(1.8)		786-46001	002-702
(2.0)		786-46001	002-704
(3.0)		786-46001	002-706
(3.3)	Std on TM32, TM34, TM36	786-46001	002-705
(3.5)	Std on TM38	786-46001	002-707
	O-Ring for Needle Valve Seat	KV-10	002-709

Applications: Flatslide TMS38, Early Style TMX35, TMX38

Size	Application	Mikuni No.	Order No.
(1.8)		786-36004A	002-464
(3.5)		786-36004	002-466

Applications: TMX38-2, TMX38-5 with Triangular Throttle Valve, Honda, Husqvarna, Kawasaki, Suzuki & Yamaha Later Style Triangular Throttle Valve OEM TMX36, TMX38

Size	Application	Mikuni No.	Order No.
(3.3)		786-36011	007-954
(3.8)		786-36010	007-953
	O-Ring for Needle Valve Seat	KV-10	002-709

Applications: TM33 with Accelerator Pump Suzuki OEM DR250/DR350 Offroad with Mikuni TM33 (90-99)

Size	Application	Mikuni No.	Order No.
(1.5)		N133.200	007-501
(1.8)	Std on TM33	N133.200	007-502
(2.0)		N133.200	007-503
(2.3)		N133.200	007-504
	O-Ring for Needle Valve Seat	KV-10	002-709
	Filter for Needle Valve Seat	VM18/233	002-606

Applications: HS40, TM36-68 & TM40-6 (With Accelerator Pump)

Size	Application	Mikuni No.	Order No.
(3.3)	Std on TM36-68	786-36011	007-505
(3.8)	Std on TM40-6	990-786-044	002-877
	O-Ring for Needle Valve Seat	KV-10	002-709

Applications: HSR42, HSR45 & HSR48 (with viton tip needle)

Size	Application	Mikuni No.	Order No.
(2.3)		786-27001	007-478
(3.5)		786-27001	007-477
(4.2)	Std on HSR42/45	786-27001	007-476
(4.5)	Std on HSR48 **(no o-ring)**	786-27002-1A	007-708
	O-ring for Needle Valve Seat	616-33003	007-470

Applications: RS34, RS36, RS38 & RS40 (O-Ring for needle valve seat not included)

Size	Application	Mikuni No.	Order No.
(2.0)		N149.040	007-143
(2.5)		N149.040	007-144
(2.8)	Std on all RS Series	N149.040	007-145
	O-Ring for Needle Valve Seat	KV-10	002-709
	Filter for Needle Valve Seat	VM18/233	002-606

Applications: VM29 & VM33 Smoothbore

Size	Application	Mikuni No.	Order No.
(2.5)		N122.032	002-503
(2.8)	Std on VM29 & VM33	N122.032	002-504
	Washer for Needle Valve Seat	BS34/52-0.5	002-187
	Filter for Needle Valve Seat	VM18/233	002-606

Applications: BN34, BN38 & BN44mm Watercraft with Round Pump Carb

Size	Application	Mikuni No.	Order No.
(1.0)		VM26/26	002-230
(1.2)		VM26/26	002-234
(1.5)		VM26/26	002-231
(1.5)	Viton Tip	VM26/185	002-232
(2.0)		VM26/26	002-189
(2.5)		VM26/26	002-190
(2.8)		VM26/26	002-191
	Washer for Needle Valve Seat	VM26/25	002-188

Applications: BN34, BN38 & BN44mm Watercraft

Size	Application	Mikuni No.	Order No.
1.5		786-15005	002-890
2.0		786-15005	002-891
2.5		786-15005	002-892
	Washer for Needle Valve Seat	VM26/25	002-188

Applications: Super BN 38, BN44 and BN46 Watercraft Super BN38I, BN40I Watercraft

Size	Application	Mikuni No.	Order No.
1.5		786-35015	002-880
1.8		786-35015	002-884
2.0		786-35015	002-881
2.3		786-35015	002-882
2.5		786-35015	002-883
	O-Ring for Needle Valve Seat	KV-10	002-709

Applications: Super BN44I, BN46I

Size	Application	Mikuni No.	Order No.
1.5		786-35018	002-900
1.8		786-35018	002-897
2.0		786-35018	002-898
2.5		786-35018	002-899
	O-Ring for Needle Valve Seat	KV-10	002-709

Genuine Mikuni Needle Valve Seat Filter

Used on the following Mikuni carburetors: RS34, RS36, RS38 & RS40 Smoothbore, VM29, VM33 Smoothbore, TM33 Pumper and OEM push type needle valve assembly. Sold each. Needle Valve Assembly not included. ***Made in Japan.***

Order No. 002-606

OEM reference for Needle Valve Seat Filter

Kawasaki 14043-1010	Late model KZ1000/1100
Suzuki 13376-19F00	GS series - GS750/1000/1100
Yamaha 1J7-14994-00-00	XS1100 Series

MIKUNI Pilot Jets

VM22/210

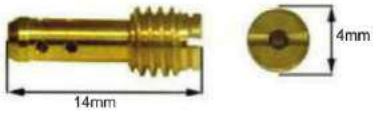

Applications: VM18 clamp-on, VM22 flange, VM26-8074, VM26 - VM34 flange, VM24 -VM44 spigot, TM series TM24 - TM38 (no Accelerator pump), early TMS/TMX Carburetors, OEM **Kawasaki, Suzuki, Yamaha** 2-stroke and some 4-stroke models.
Note: VM26-606 spigot, use M28/1001 pilot jets.

Size	Order No.	Size	Order No.	Size	Order No.
#10	004-000	#37.5	004-594	#70	004-016
#12.5	004-001	#40	004-010	#75	004-017
#15	004-002	#42.5	004-733	#80	004-018
#17.5	004-003	#45	004-011	#85	004-067
#20	004-004	#47.5	004-734	#90	004-068
#22.5	004-005	#50	004-012	#95	004-069
#25	004-006	#52.5	004-735	#100	004-590
#27.5	004-007	#55	004-013	#110	004-591
#30	004-008	#57.5	004-736	#120	004-592
#32.5	004-593	#60	004-014	#130	004-737
#35	004-009	#65	004-015	#140	004-738

BS30/96 (Bleed Type)

Applications: Kawasaki, Suzuki, Yamaha. With OEM (BS) CV Carburetors.

Size	Order No.	Size	Order No.	Size	Order No.
#30	004-054	#42.5	004-059	#55	004-064
#32.5	004-055	#45	004-060	#57.5	004-065
#35	004-056	#47.5	004-061	#60	004-066
#37.5	004-057	#50	004-062		
#40	004-058	#52.5	004-063		

M28/1001

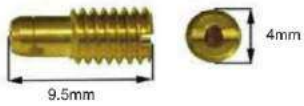

Applications: VM20 flange, VM26-606 spigot. **Kawasaki** KX65, **Suzuki** RM65, **Yamaha** RX50 Special (83-84), YSR50 (87-92), RD60 (73-74), YZ80 (75-01), DT125 (74-81), DT175 (74-81), MX175 (79-81), YFS200 Blaster (88-06), RZ350 (84-85), YFZ350 Banshee (87-06).

Size	Order No.	Size	Order No.	Size	Order No.
#15	004-039	#32.5	004-597	#50	004-046
#17.5	004-050	#35	004-043	#52.5	004-601
#20	004-040	#37.5	004-598	#55	004-047
#22.5	004-595	#40	004-044	#57.5	004-602
#25	004-041	#42.5	004-599	#65	004-049
#27.5	004-596	#45	004-045	#70	004-603
#30	004-042	#47.5	004-600		

N151.067 (Non Bleed Type)

Applications: Late model OEM (BS) CV Carburetors. **Kawasaki** KZ1000J/K/M/P/R, KZ1100, **Suzuki** GSF600 Bandit up to 2001, DR650, GS1000, GS1100, GSX-R1100W (93-98) **Yamaha** YFM350 Warrior, FJ1100, XS1100.

Size	Order No.	Size	Order No.	Size	Order No.
#30	004-605	#42.5	004-610	#55	004-615
#32.5	004-606	#45	004-611	#57.5	004-616
#35	004-607	#47.5	004-612	#60	004-617
#37.5	004-608	#50	004-613		
#40	004-609	#52.5	004-614		

VM28/486

Applications: HS40, HSR42/45/48, RS34 - RS40 and TM33, TM36, TM40 with accelerator pump, **Kawasaki** Z1A/B-900 (74-75), KZ900A/B (76-77), KZ1000 (77-80), **Suzuki** DR-Z125, RM250 (89-92) GS750, GS1100 (78-79), **Yamaha** YFM80 Raptor 80, TT-R125.

Size	Order No.	Size	Order No.	Size	Order No.
#10	004-556	#32.5	004-557	#55	004-560
#12.5	004-027	#35	004-035	#57.5	004-552
#15	004-028	#37.5	004-555	#60	004-561
#17.5	004-029	#40	004-036	#62.5	004-553
#20	004-030	#42.5	004-051	#65	004-562
#22.5	004-031	#45	004-037	#67.5	004-554
#25	004-032	#47.5	004-052	#70	004-563
#27.5	004-033	#50	004-038		
#30	004-034	#52.5	004-551		

Slow Speed Jets N100.606

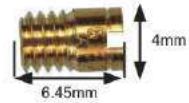

Applications: Slow Speed Jet on BN Personal Watercraft Carburetors. Super BN 38, BN44, BN46, BN38I, BN40I, BN44I, BN46I.
Pilot Jet for **Kawasaki** KZ1300A (79-82) and Main Jet for **Yamaha** Generator (1HX).

Size	Order No.	Size	Order No.	Size	Order No.
#30	004-442	#77.5	004-461	#120	004-478
#32.5	004-443	#80	004-462	#122.5	004-479
#35	004-444	#82.5	004-463	#125	004-480
#37.5	004-445	#85	004-464	#127.5	004-481
#40	004-446	#87.5	004-465	#130	004-482
#42.5	004-447	#90	004-466	#132.5	004-483
#45	004-448	#92.5	004-467	#135	004-484
#47.5	004-449	#95	004-468	#137.5	004-485
#50	004-450	#97.5	004-469	#140	004-486
#52.5	004-451	#100	004-470	#142.5	004-487
#55	004-452	#102.5	004-471	#145	004-488
#57.5	004-453	#105	004-472	#147.5	004-489
#60	004-454	#107.5	004-473	#150	004-490
#62.5	004-455	#110	004-474	#155	004-491
#65	004-456	#112.5	004-475	#160	004-492
#67.5	004-457	#115	004-476		
#70	004-458	#117.5	004-477		
#72.5	004-459				
#75	004-460				

N224.103

Applications: TMR, TMX late, OEM TMX36, TMX38, OEM BSR CV **Honda** CR125R (00-07), CR250R (01-07),
Kawasaki KX125 (00-05), KSF400 "KFX" (03-06), **Polaris** Predator, **Suzuki** RM125 (00-07), LT-Z400 (03-07), SV650, GSF600 Bandit 02-up **Yamaha** YZ125 (95-07), YFM250 Raptor 250, YFM350 Raptor (04-07), YFM660 Raptor (01-05), YXR660 Rhino Side x Side (04-07), YZF-R1, FZ1.

Size	Order No.	Size	Order No.	Size	Order No.
#10	004-580	#32.5	004-569	#55	004-575
#12.5	004-581	#35	004-570	#57.5	004-587
#15	004-582	#37.5	004-571	#60	004-576
#17.5	004-583	#40	004-572	#65	004-577
#20	004-564	#42.5	004-584	#70	004-578
#22.5	004-565	#45	004-573		
#25	004-566	#47.5	004-585		
#27.5	004-567	#50	004-574		
#30	004-568	#52.5	004-586		

BS30/97 Air Jet

Meters the air flow through the passage to and into the needle jet. It acts as a fine tuning component in regulating the fuel-air mixture. This is especially important when a bleed type needle jet is used.
Applications: VM26 thru VM44 spigot carburetor, RS, TM, VM29/ VM33 Smoothbore.

Size	Order No.	Size	Order No.	Size	Order No.
#0.0	002-149	#1.0	002-155	#1.6	002-161
#0.5	002-150	#1.1	002-156	#1.7	002-162
#0.6	002-151	#1.2	002-157	#1.8	002-163
#0.7	002-152	#1.3	002-158	#1.9	002-164
#0.8	002-153	#1.4	002-159	#2.0	002-165
#0.9	002-154	#1.5	002-160		

B42/55 Air Jet

Applications: OEM CV (BS) Carburetors, Pilot Air Jet and Main Air Jet for OEM **Suzuki** GS1000, GS1100 (80-82), OEM **Yamaha** XS1100 (80-81).

Size	Order No.	Size	Order No.	Size	Order No.
#70	004-640	#145	004-655	#210	004-668
#80	004-642	#150	004-656	#220	004-670
#90	004-644	#155	004-657	#230	004-672
#100	004-646	#160	004-658	#240	004-674
#105	004-647	#165	004-659	#250	004-676
#110	004-648	#170	004-660	#260	004-678
#115	004-649	#175	004-661	#270	004-680
#120	004-650	#180	004-662	#280	004-682
#125	004-651	#185	004-663	#290	004-684
#130	004-652	#190	004-664	#300	004-686
#135	004-653	#195	004-665		
#140	004-654	#200	004-666		

VM28/213

Size	Order No.	Size	Order No.	Size	Order No.
#15	004-019	#22.5	004-022	#35	004-025
#17.5	004-020	#25	004-023	#40	004-026
#20	004-021	#30	004-024		

Starter Jet VM17/1002

Controls enricher on TM Carburetors.
Applications: TM32 - TM38 Carburetors, RS Smoothbore.

Size	Order No.	Size	Order No.	Size	Order No.
#15	004-400	#40	004-406	#80	004-414
#20	004-402	#60	004-410	#100	004-418

N101.043

Applications: B-Type Butterfly Carb.

Size	Order No.	Size	Order No.	Size	Order No.
#30	004-501	#65	004-515	#97.5	004-528
#35	004-503	#67.5	004-516	#100	004-529
#37.5	004-504	#70	004-517	#105	004-531
#40	004-505	#72.5	004-518	#110	004-533
#42.5	004-506	#75	004-519	#115	004-534
#45	004-507	#77.5	004-520	#120	004-535
#47.5	004-508	#80	004-521	#125	004-536
#50	004-509	#82.5	004-522	#130	004-537
#52.5	004-510	#85	004-523	#135	004-538
#55	004-511	#87.5	004-524	#140	004-539
#57.5	004-512	#90	004-525	#145	004-540
#60	004-513	#92.5	004-526	#150	004-541
#62.5	004-514	#95	004-527	#155	004-542
				#160	004-543

Zip-Ty Air Mixture Screw

Fits 2-stroke Mikuni Carburetors. Allows you to easily adjust your pilot jet on the go without using a small tool.
Anodized blue.

MIKUNI Main Jets

Mikuni Dealer Main Jet Kits

Genuine OEM N100.604 large round main jets. ***Made in Japan.***

Mikuni Dealer Main Jet Kit, sizes #50 - #105.

Order No. 004-995
Kit Includes qt 4 of the following main jet sizes:
#50, #52.5, #55, #57.5, #60, #62.5, #65, #67.5, #70, #72.5, #75, #77.5, #80, #82.5, #85, #87.5, #90, #92.5, #97.5, #100, #105.
Total jets: 88 with storage box.

Mikuni Dealer Main Jet Kit, sizes #107.5 - #160.

Order No. 004-996
Kit Includes qt 4 of the following main jet sizes:
#107.5, #110, #112.5, #115, #117.5, #120, #122.5, #125, #127.5, #130, #132.5, #135, #137.5, #140, #142.5, #145, #147, #150, #152.5, #155, #157.5, #160.
Total jets: 88 with storage box.

Mikuni Dealer Main Jet Kit, sizes #162.5 - #240.

Order No. 004-997
Kit Includes qt 4 of the following main jet sizes:
#162.5, #165, #167.5, #170, #172.5, #175, #177.5, #180, #182.5, #185, #187.5, #190, #192.5, #195, #200, #205, #210, #220, #230, #240.
Total jets: 88 with storage box.

Large Round N100.604

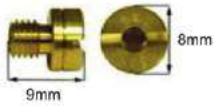

Applications: VM16, HS40, HSR42/45/48, RS, TM33 Pumper, TM36, TM40, TM, VM29/VM33 Smoothbore, Needle Jet Series - 171, 188, 196 with Large Round, **Kawasaki** H1-500 (all), H2-750 (all), Z1-900, KZ900A/B, (76-77), KZ1000, KZ1100, **Suzuki** DR-Z125, GS450/500 /650/750/850/1000/1100/1150, **Yamaha** TTR125, XS350/400/750/1100 and many 2-stroke & 4-stroke Street, ATV, Offroad, YFM250 Raptor 250.

Size	Order No.	Size	Order No.	Size	Order No.
#50	004-160	#105	004-182	#160	004-204
#52.5	004-161	#107.5	004-183	#162.5	004-205
#55	004-162	#110	004-184	#165	004-206
#57.5	004-163	#112.5	004-185	#167.5	004-207
#60	004-164	#115	004-186	#170	004-208
#62.5	004-165	#117.5	004-187	#172.5	004-209
#65	004-166	#120	004-188	#175	004-210
#67.5	004-167	#122.5	004-189	#177.5	004-211
#70	004-168	#125	004-190	#180	004-212
#72.5	004-169	#127.5	004-191	#182.5	004-213
#75	004-170	#130	004-192	#185	004-214
#77.5	004-171	#132.5	004-193	#187.5	004-215
#80	004-172	#135	004-194	#190	004-216
#82.5	004-173	#137.5	004-195	#192.5	004-217
#85	004-174	#140	004-196	#195	004-218
#87.5	004-175	#142.5	004-197	#200	004-220
#90	004-176	#145	004-198	#205	004-222
#92.5	004-177	#147.5	004-199	#210	004-223
#95	004-178	#150	004-200	#215	004-353
#97.5	004-179	#152.5	004-201	#220	004-350
#100	004-180	#155	004-202	#230	004-351
#102.5	004-181	#157.5	004-203	#240	004-352

Mikuni Dealer Main and Pilot Jet Kit

Genuine OEM 4/042 large hex main jets and N224.103 pilot jets. ***Made in Japan.***

Mikuni Dealer Main and Pilot Jet Kit, sizes #350 - #500 Main Jets and sizes #32.5 - #65 Pilot Jets.

Order No. 004-999
Kit Includes qt 2 of the following jet sizes:
Main Jets: #350, #360, #370, #380, #390, #400, #410, #420, #430, #440, #450, #460, #470, #480, #490, #500.
Pilot Jets: #32.5, #35, #37.5, #40, #45, #50, #55, #60, #60.
Total jets: 50 with storage box.

Large Hex 4/042

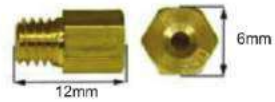

Applications: VM18 Clamp-On, VM24-512, VM26-606, OEM TMX Late Series,Needle Jet Series - 159, 176, 183, 188, 192, 193, 205, 211, 224 with 4/042 hex main, **Honda** CR125R (00-07), CR250R (01-07), **Husqvarna** CR/WR125/250, **Kawasaki** KX125 (00-05), **Suzuki** RM125 (00-07), **Yamaha** YZ125 (95-08), RD350/400, YFZ350 Banshee (87-06) and many 2-stroke ATV and Offroad, **Polaris** Snowmobile 400XC/XCR with Mikuni TMX and **Polaris** 2-stroke ATV with VM carburetor.

Size	Order No.	Size	Order No.	Size	Order No.
#50	004-070	#175	004-095	#390	004-124
#55	004-071	#180	004-100	#400	004-125
#60	004-072	#185	004-101	#410	004-126
#65	004-073	#190	004-102	#420	004-127
#70	004-074	#195	004-103	#430	004-128
#75	004-075	#200	004-104	#440	004-129
#80	004-076	#210	004-105	#450	004-130
#85	004-077	#220	004-106	#460	004-131
#90	004-078	#230	004-107	#470	004-132
#95	004-079	#240	004-108	#480	004-133
#100	004-080	#250	004-109	#490	004-134
#105	004-081	#260	004-110	#500	004-135
#110	004-082	#270	004-111	#540	004-139
#115	004-083	#280	004-112	#560	004-141
#120	004-084	#290	004-113	#580	004-143
#125	004-085	#300	004-115	#600	004-145
#130	004-086	#310	004-116	#620	004-146
#135	004-087	#320	004-117	#640	004-147
#140	004-088	#330	004-118	#660	004-149
#145	004-089	#340	004-119	#680	004-150
#150	004-090	#350	004-120	#700	004-151
#155	004-091	#360	004-121	#720	004-153
#160	004-092	#370	004-122		
#165	004-093	#380	004-123		
#170	004-094				

Keihin/Mikuni Main Jet Wrench

Sold each. **Order No. 002-401**

Small Round N102.221

Applications: Personal Watercraft (High Speed Jets) Super BN 38, BN44, BN46, BN38I, BN40I, BN44I, BN46I, Needle Jet Series 171, 188, 196. with small round. **Arctic Cat** DS650, **Kawasaki** KSF400 "KXF" (03-06), **Polaris** Predator and Outlaw 500 with Mikuni BSR carburetor, **Suzuki** ALT50 (1983), LT50 (84-87), LT-A50 (02-05), LT-Z400, DR-Z400 with Mikuni carb, SV650, **Yamaha** Generator (3G2), YFM660 Raptor, YXR660 Rhino Side x Side.

Size	Order No.	Size	Order No.	Size	Order No.
#30	004-333	#92.5	004-282	#155	004-307
#32.5	004-334	#95	004-283	#157.5	004-308
#35	004-335	#97.5	004-284	#160	004-309
#37.5	004-336	#100	004-285	#162.5	004-310
#40	004-337	#102.5	004-286	#165	004-311
#42.5	004-338	#105	004-287	#167.5	004-312
#45	004-339	#107.5	004-288	#170	004-313
#47.5	004-340	#110	004-289	#172.5	004-314
#50	004-255	#112.5	004-290	#175	004-315
#52.5	004-256	#115	004-291	#177.5	004-316
#55	004-267	#117.5	004-292	#180	004-317
#57.5	004-268	#120	004-293	#182.5	004-318
#60	004-269	#122.5	004-294	#185	004-319
#62.5	004-270	#125	004-295	#187.5	004-320
#65	004-271	#127.5	004-296	#190	004-321
#67.5	004-272	#130	004-297	#195	004-323
#70	004-273	#132.5	004-298	#200	004-325
#72.5	004-274	#135	004-299	#205	004-326
#75	004-275	#137.5	004-300	#210	004-327
#77.5	004-276	#140	004-301	#215	004-328
#80	004-277	#142.5	004-302	#220	004-329
#82.5	004-278	#145	004-303	#230	004-330
#85	004-279	#147.5	004-304	#240	004-331
#87.5	004-280	#150	004-305		
#90	004-281	#152.5	004-306		

Small Hex M10/14

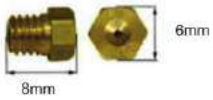

Applications: Early **Kawasaki** rotary valve, 2-stroke singles and **Yamaha** small bore, 2-stroke singles.

Size	Order No.	Size	Order No.	Size	Order No.
#40	004-360	#105	004-235	#160	004-246
#50	004-224	#110	004-236	#165	004-247
#55	004-225	#115	004-237	#170	004-248
#60	004-226	#120	004-238	#175	004-249
#65	004-227	#125	004-239	#180	004-250
#70	004-228	#130	004-240	#185	004-251
#75	004-229	#135	004-241	#190	004-252
#80	004-230	#140	004-242	#195	004-253
#85	004-231	#145	004-243	#200	004-254
#90	004-232	#150	004-244		
#95	004-233	#155	004-245		
#100	004-234				

Press-In N208.099

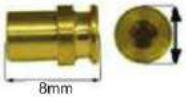

O-Ring
007-790
Sold separate

Applications: Ducati late model CV and **Yamaha** YZF750 OEM BDST Carburetors (downdraft).

Size	Order No.	Size	Order No.	Size	Order No.
#110	004-700	#130	004-708	#150	004-716
#112.5	004-701	#132.5	004-709	#155	004-718
#115	004-702	#135	004-710	#160	004-720
#117.5	004-703	#137.5	004-711	#165	004-722
#120	004-704	#140	004-712	#170	004-724
#122.5	004-705	#142.5	004-713	#175	004-726
#125	004-706	#145	004-714	#190	004-727
#127.5	004-707	#147.5	004-715		

Large Thread VM11/22

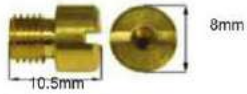

Applications: Suzuki LT-Z50 (06-07), LT-Z90 (2007), **Yamaha** YFM50 Raptor, YFM80 Grizzly 80, YFM80 Badger, YFM80 Raptor, TTR90 (00-07).

Size	Order No.	Size	Order No.	Size	Order No.
#50	004-740	#80	004-752	#130	004-764
#52.5	004-741	#82.5	004-753	#135	004-765
#55	004-742	#85	004-754	#140	004-766
#57.5	004-743	#87.5	004-755	#145	004-767
#60	004-744	#90	004-756	#150	004-768
#62.5	004-745	#95	004-757	#155	004-769
#65	004-746	#100	004-758	#160	004-770
#67.5	004-747	#105	004-759	#165	004-771
#70	004-748	#110	004-760	#170	004-772
#72.5	004-749	#115	004-761	#175	004-773
#75	004-750	#120	004-762	#180	004-774
#77.5	004-751	#125	004-763		

Sudco Small Jet Carrier

Stores 20 main jets, 6 pilot jets (Keihin & Mikuni) and 3 jet needle. Keihin PE, PJ, PWK, PWM jet needle and Mikuni 4, 5, and 6 series. Jets not included.

Order No. 002-405

Sudco Large Jet Carrier

Stores 20 main jets, 8 pilot jets (Keihin & Mikuni) and it has additional space. Jets not included.

Order No. 002-406

Mikuni Fuel Pumps & Rebuild Kits

DF44-211 DF52-136 DF52-21 DF52-73 DF52-92 DF62-702

Mikuni Pulse Fuel Pumps

Mikuni Pulse Fuel Pumps employ an engine's fluctuating engine crankcase pressure to pump fuel from a remote fuel tank to an engine's carburetor(s). Applications include Personal Watercraft and Snowmobiles. Sold each.

Mikuni No.	Number of Outlets	Style	Mounting	Flow Rate Liter/Hour	Order No. Fuel Pump	Order No. Rebuild Kit
DF44-211 (DF44-227)	1	Square	Flush	14	002-220	002-225
D52-21 (DF52-176)	2	Round	Bracket	35	002-221	002-223
DF52-73	2	Round	Flush	35	002-228	002-223
DF52-92	3	Round	Flush	35	002-229	002-223
DF52-136	2	Square	Flush	31	002-222	———
DF62-702	2	Pentagon	Flush	65	002-227	002-226

002-225

002-223

002-226

Mikuni Fuel Pump Rebuild Kits

Sold in kits. See contents listing for parts in each kit.

Mikuni Kit No. MK-DF44 **Order No.** 002-225
Fits DF44 Fuel Pump.

Contents	Description	Qt.	Remarks
CW2=0416	Screw	4	with lock washer
DF44-201/03	Gasket	1	Fiber
DF44-201/04	Diaphragm	1	Clear
DF44-201/05	Membrane	1	Thin Rubber

Mikuni Kit No. MK-DF52 **Order No.** 002-223
Fits ALL DF52 Fuel Pumps except DF52-136.

Contents	Description	Qt.	Remarks
DF52-105	Gasket	1	Thick Fiber
DF52-48/10	Diaphragm	2	Transparent Film
DF52-48/05	Gasket	1	Thin Rubber
DF52/113	Gasket	1	Thin Rubber
DF52/36A	Gasket	1	Thick Fiber
DF52/27A	Valve	2	Clear
DF44/26	Grommet	2	Black

Note: Fuel Pump Rebuild Kit for DF52-136 is not available.

Mikuni Kit No. MK-DF62 **Order No.** 002-226
Fits DF62 Fuel Pump

Contents	Description	Qt.	Remarks
DF62-601/03	Gasket	2	Paper Gasket
DF62-601/04	Diaphragm	2	Clear
DF62-701/03	Gasket	2	Paper Gasket
DF62-701/05	Check Valve	2	Clear Grommet

K&N Inline Fuel Pump

Provides premium quality fuel system hardware with a universal design that fits a wide variety of applications. Compatible with diesel, biodiesel, gasoline, E85, methanol, ethanol, alcohol and other fuels. For use with 5/16 inch fuel lines.

Order No. 006-001

YXR660 Rhino Fuel Pump Rebuild Kit

Mikuni Kit No.MK-DF52-531 **Order No.** 002-224
Fits Yamaha OEM Fuel Pump for YXR450/YXR660 Rhino side x side.

Air Box Adapters & Manifold Adapters

005-044

005-013

005-038

005-026

005-848

Honda

Model	Year	Description	Reference	Carb	Qt	Order No.
FL250 Odyssey	77-84	Manifold	SM-49A	30, 32, 34, 36, 38	each	005-052
FL250 Odyssey	77-84	Rubber Flange	M-VM-34-200K	30, 32, 34	each	002-053
FL250 Odyssey	77-84	Rubber Flange	M-VM-36-200K	36, 38	each	002-054
TRX250X		Air Box Adapter	———	VM30 - 34/TM36	each	005-075
XR250R	84-85	Manifold	SM-56		each	005-067
XR250R	84-85	Rubber Flange	M-VM-34-200K		each	002-053
XR250R	84-85	Air Box Adapter	———		each	005-077
XR350R	83-84	Manifold	SM-56		each	005-067
XR350R	83-84	Rubber Flange	M-VM-34-200K		each	002-053
XR350R	83-84	Air Box Adapter	———		each	005-077
XR400R	96-04	Air Box Adapter	———	TM36	each	005-078
XR650R	00-07	Air Box Adapter	———	TM40	each	005-820
XR650R	00-07	Intake Spigot	XR-05	TM40	each	005-822
CB750 SOHC (pre 1979)	69-78	Intake Manifolds	VM29/A2HSM	VM29 Smoothbore	set 4	005-026

HARLEY DAVIDSON®

Sportster® 900/1000		Manifold with hose	SM-7	VM36, 38	each	005-013
Shovelhead		Manifold with hose	SM-7	VM36, 38	each	005-013
Knucklehead, Panhead		Manifold	SM-9	VM36, 38	each	005-015
Knucklehead, Panhead		Manifold	SM-10	VM40, 44	each	005-016
Evo Adapter Ring	1990 on		MK-413	TM40 (HS40)	each	005-095

Norton

Atlas (Single Carb)		Manifold		VM30, 32, 34	each	005-088
Atlas (Single Carb)		Rubber Flange	M-VM-34-200K	VM30, 32, 34	each	002-053
Commando 750/850 (Single Carb)		Manifold	SM-23	VM32, 34	each	005-037
Commando 750/850 (Single Carb)		Rubber Flange	M-VM-34-200K	VM32, 34	each	002-053
Commando 750/850 (Single Carb)		Manifold	SM-23A	VM36, 38	each	005-038
Commando 750/850 (Single Carb)		Rubber Flange	M-VM-36-200K	VM36, 38	each	002-054
Commando 750/850 (Dual Carb)		Manifold	SM-18	VM30, 32, 34	each	005-036
Commando 750/850 (Dual Carb)		Rubber Flange	M-VM-34-200K	VM30, 32, 34	each	002-053

Triumph

Bonneville (Flange Mount)	72-78	Manifold	SM-44	VM30, 32, 34	pair	005-060
Bonneville (fine Thread pitch 20)	63-68	Manifold with hose	SM-14	VM30, 32, 34	pair	005-044
Bonneville (coarse Thread pitch 16)	Mid 69-72	Manifold with hose	SM-13	VM30, 32, 34	pair	005-043
Bonneville	Mid 72-78	Manifold	SM-44	VM30, 32, 34	each	005-060A
TR6, TR7 single	up to 1981	Manifold	SM-43	VM30, 32, 34	each	005-045
TR6, TR7 single	up to 1981	Rubber Flange	M-VM-34-200K	VM30, 32, 34	each	002-053

Yamaha

YFZ350 Banshee	87-06	Manifold only			each	005-847
YFZ350 Banshee	87-06	Manifold with VM28/200 Flanges (002-050)		26 - 28	kit	005-848
YFZ350 Banshee	87-06	Manifold with VM34/200 Flanges (002-053)		30 - 35	kit	005-849
XS650	all	Intake Flange **with clamps**		VM34	kit	005-815
XS650	all	Intake Flange **only**		VM34	each	005-815A

Honda ATC/TRX250R

Yamaha YFS200 Blaster

Yamaha YFZ350 Banshee Carb Boots

UPP ATV Intake Manifolds

Made of polyurethane. Stronger, tougher and more durable then products made with conventional elastomer and plastic. No cracking or ripping with these bullet proof manifolds. Out preforms the stock rubber manifolds. Sold in pairs and each as noted.

Honda ATV

Model	Year	Carb Application	Qt	Order No.
ATC250R	85-86	Stock	each	005-830
ATC250R	85-86	PWK 38 - 39mm	each	005-831
TRX250R	86-89	Stock	each	005-830
TRX250R	86-89	PWK 38 - 39mm	each	005-831

Yamaha YFZ350 Banshee

Yamaha ATV (UPP cont.)

Model	Year	Carb Application	Qt	Order No.
YFS200 Blaster	88-06	Stock	each	005-840
YFS200 Blaster	88-06	PJ34, PWK33 - 35	each	005-841
		TM34		
YFZ350 Banshee	87-06	Stock, PWK28	pair	005-835
		With boost holes at top		
YFZ350 Banshee	87-06	PJ34, PWK33 - 35	pair	005-836
		TM34. With boost holes at top		
YFZ350 Banshee	87-06	PJ34, PWK33 - 35	pair	005-837
		TM34. No boost holes at top		
YFZ350 Banshee	87-06	PWK38 - 39, TM38	pair	005-844
		No boost holes at top		
YFM660 Raptor	01-05	Stock, FCR35, FCR39	pair	005-839

Yamaha YFM660 Raptor

UPP Carb Boots for Yamaha YFZ350 Banshee

For mounting carburetor to stock airbox. Made of polyurethane. Stronger, tougher and more durable then the stock rubber boots. Sold in pairs.

Model	Year	Carb Application	Qt	Order No.
YFZ350 Banshee	87-06	Stock, PWK28	pair	005-845
YFZ350 Banshee	87-06	PJ34, PWK33 - 35, TM34	pair	005-846

Honda CB750

UPP Intake Manifolds for Vintage Street

Honda

Model	Mfg. No.	Qt	Order No.
CB750 (SOHC)	VM29/A2HSM	set of 4.	005-026

For mounting aftermarket performance carburetors to CB750 (SOHC) from 1969 to 1978 SOHC models.

Yamaha

Model	Mfg. No.	Qt	Order No
XS650 Twin		each	005-815

For mounting aftermarket Mikuni VM carburetors to XS650 2-cylinder models from 1970-1979. 70mm bolt hole center.

RZ350		pair	005-835

Replacement for OEM Mikuni carburetors on RZ350 from 1984-1985.

Hose Clamps Sold each.

#24 Hose Clamp	38-50/12mm	005-098
#28 Hose Clamp	44-56/12mm	005-092
#40 Hose Clamp	58-75/12mm	005-097
Hose Clamp	TMX/002-32	007-498

MIKUNI Rubber Mounting Flanges

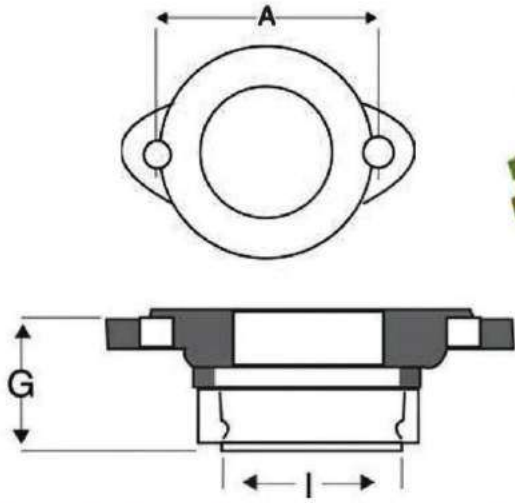

002-056 002-054 002-053 002-050

Mikuni Rubber Mounting Flanges (Diagram and Dimensions)

Sold each. Dimensions listed are millimeters.

8.5mm Bolt Hole Center (A)	Carb Bore Size	Carb Spigot Diameter (I)	Flange Throat Depth (G)	Typical Carb Size Reference No.	Mikuni No.	Order No.	Note
60	30	35	28	26 - 28	M-VM28-200K	002-050	
57	30	37	23	26 - 28	990-842-046	002-051	
75	34	40	32	30 - 34	990-842-007	002-052	
60	36	40	25	30 - 34	M-VM-34-200K	002-053	
70	40	43	25	36 - 40	M-VM-36-200K	002-054	
75	40	43	28	36 - 38	I-VM-38-200-1	002-055	
75	46	52	32	40 - 44	M-VM40-200K	002-056	
84	46	52	26	40 - 44	I-VM44-200-1	———	
70-75	40	43	28	36 - 40	KHS-004	002-986	
70-75	42	45	25	42	HS42/018-42K	007-460	
70-75	42	45	25	42	HS42/062-42K	007-468	New Style Oval Port
70-75	45	48	25	45	HS42/018-45K	007-461	
70-75	45	48	25	45	HS42/062-45K	007-469	New Style Oval Port
70-75	48	52	25	48	HS42/062-48K	007-467	New Style Oval Port

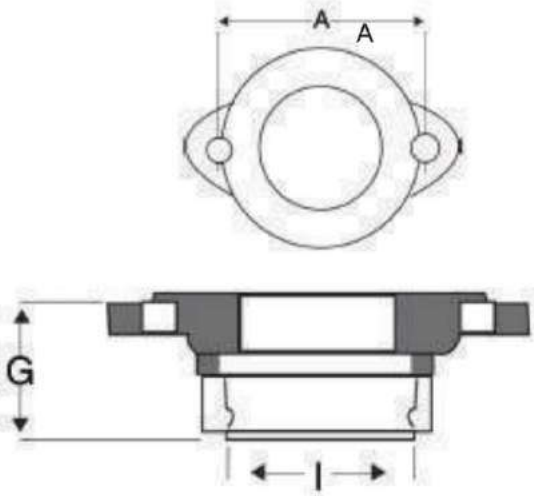

005-800 005-801

005-802 005-810

Amal to Mikuni Rubber Mounting Flanges

Sold each. Dimensions listed are millimeters.

8.5mm Bolt Hole Center (A)	Carb Bore Size	Carb Spigot Diameter (I)	Flange Throat Depth (G)	Flange Throat Diameter	Mikuni Reference	Order No.
50.80 (2")	28	35	24	28	VM26/28	005-800
50.80 (2")	30	40	24	30	VM30	005-801
50.80 (2")	32	40	24	34	VM32	005-802
65	36-38	43	28	37.5	VM36/38	005-810

005-897

005-865

Sudco Intake Carb Holders

Use with the original OEM carburetors. ***Made in Japan*** to OEM specifications. Available in kits only. Order per Sudco part number.
Stock OEM hose clamps must be used when installed.
Note: Some of the applications listed require o-ring or gasket.
LH to RH - From left to right behind engine when installing.

Honda

Carb Holder Kit CB750KO **Order No. 005-897**

Includes qt 4 Carb Holders
LH & RH outside only, 16211-300-305 (1 &4)
LH & RH inside only, 16212-300-305 (2 & 3)

Application	
CB750K0	69-70

Carb Holder Kit CB750K1-5 **Order No. 005-898**

Includes qt 4 Carb Holders
LH & RH outside only, 16211-300-030 (1 &4)
LH & RH inside only, 16212-300-030 (2 & 3)

Application	
CB750K1-K5	71-75
CB750K	1976
CB750F Super Sport	1976

Kawasaki

Carb Holder Kit Z1/KZ900/KZ1000 **Order No. 005-865** Includes qt 2 LH Carb Holders and qt 2 RH Carb Holders
LH side only, 16065-029
RH side only, 16065-028

Z1/Z1A/Z1B 900	73-75
KZ900A4	1976
KZ900B1 LTD	1976
KZ1000A1/A2	77-78
KZ1000A3/A4 MKII	79-80
KZ1000B1/B2/B3/B4 LTD	77-80
KZ1000C1-C4 Police	78-81
KZ1000E1/E2 Shaft	79-80
KZ1000D1 Z1R	1978
KZ1000D3 Z1R	1980

Carb Holder Kit KZ1000/KZ1100 **Order No. 005-866**

Includes qt 4 Carb Holders
LH & RH sides 16065-1135

KZ1000J1/J2	81-82
KZ1000K1/K2 LTD	81-82
KZ1000M1/M2 CSR	81-82
KZ1000P1-P21 Police	82-02
KZ1000P24 Police	2005
KZ1000R1 Replica	1982
KZ1100A1/A2 Shaft	81-82
KZ1100B2 GPz	1982
KZ1100D1 Spectre	1982

Kawasaki

Carb Holder Kit KZ1000/1100/ZX1100 **Order No. 005-867**

Includes qt 4 Carb Holders
LH & RH sides, 16065-1131

KZ1000J3	1983
KZ1000R2 Replica	1983
KZ1100A3 Shaft	1983
KZ1100D2 Spectre	1983
KZ1100L1 LTD	1983
ZN1100B1/B2 LTD	84-85
ZX1100A1/A2 GPz	83-84

Carb Holder Kit ZX1000A **Order No. 005-870**

Includes qt 4 Carb Holders
LH & RH sides, 16065-1130

ZX1000A1/A2 Ninja 1000R	86-87

Carb Holder Kit EX500 **Order No. 005-871**

Includes qt 2 Carb Holders
LH & RH sides, 16065-1130

EX500A1/A2/A3/A4/A5/A6/A7	87-93
EX500D1/D2/D3 Ninja 500	94-96
EX500D4-D12 Ninja 500R	97-05
EX500D6F/D7F/D8F/D9F	06-09

Carb Holder Kit ZX600A/B/C **Order No. 005-872**

Includes qt 4 Carb Holders
LH & RH sides, 16065-1129

ZX600A1/A2/A3 Ninja 600	85-87
ZX600B1 Ninja 600R	1987
ZX600C1-C10 Ninja 600R	88-97

Carb Holder Kit ZX900A **Order No. 005-873**

Includes qt 4 Carb Holders
LH & RH sides, 16065-1108

ZX900A1/A2/A3 Ninja 900R	84-86

Carb Holder Kit ZX1000B **Order No. 005-874**

Includes qt 4 Carb Holders and qt 4 Intake O-Rings
LH & RH sides, 16065-1182
Intake O-Ring, 92055-1401

ZX1000B1/B2/B3 Ninja ZX-10	88-90

Carb Holder Kit ZX1100C/D **Order No. 005-875**

Includes qt 4 Carb Holders and qt 4 Intake O-Rings
LH & RH sides, 16065-1210
Intake O-Ring, 92055-1401

ZX1100C1/C2/C3/C4 Ninja ZX-11	90-93
ZX1100D1-D9 Ninja ZX-11	93-01

Carb Holder Kit **Order No. 005-876**

Includes qt 4 Carb Holders and qt 4 Intake O-Rings
LH & RH sides, 16065-1307
Intake O-Ring, 92055-1401

ZR1100C3/C4 ZRX1100	99-00
ZX1100E1/E2/E3 GPz1100	95-97
ZX1100F1 GPz1100 (ABS)	1997
ZR1200A1/A2/A3/A4/A5 ZRX1200	01-05

Sudco Intake Carb Holders

005-892

005-880

Suzuki

Carb Holder Kit GSF600 **Order No. 005-891**

Includes qt 2 LH Carb Holders, 2 RH Carb Holders and qt 4 Intake O-Rings

LH side,1 & 2, 13101-26E01	
RH side, 3 & 4, 13103-26E01	
GSF600ST/SV/SW/SX/SY Bandit	96-00
GSF600SSK1/SK2/SK3 Bandit	01-03

Carb Holder Kit GSX750 **Order No. 005-892**

Includes qt 4 Carb Holders and qt 4 Intake O-Rings

LH 1 side, 13101-17C01	
LH 2 side, 13102-17C01	
RH 3 side, 13103-17C01	
RH 4 side, 13104-17C01	
GSX750FK/FL/FM/FN/FP Katana	89-93
GSX750FR/FS/FT/FV Katana	94-97
GSX-R750J/K	88-89

Carb Holder Kit GSX-R750L/M/N **Order No. 005-893**

Includes qt 4 Carb Holders and qt 4 Intake O-Rings

LH 1 side, 13101-17D00	
LH 2 side, 13102-17D00	
RH 3 side, 13103-17D00	
RH 4 side, 13104-17D00	
GSX-R750L/M/N (49 state only)	90-92

Carb Holder Kit GSX1100G/GSF1200 **Order No. 005-894**

Includes qt 4 Carb Holders and qt 4 Intake O-Rings

LH 1 side, 13101-40C00	
LH 2 side, 13102-40C00	
RH 3 side, 13103-40C00	
RH 4 side, 13104-40C00	
GSX1100GM/GN/GP Shaft	91-93
GSX-R1100K/L/M/N	89-92
GSF1200SV/SW/SX/SY Bandit	97-00

Carb Holder Kit GSX-R750W **Order No. 005-895**

Includes qt 4 Carb Holders and qt 4 Intake O-Rings

LH side 1 & 2 , 13101-17E01	
RH side 3, 13103-17E01	
RH side 4, 13104-17E01	
GSX-R750WP/WR/WS (49 state only)	93-95

Yamaha

Carb Holder Kit SR500/TT500/XT500 **Order No. 005-880**

Includes qt 1 Carb Holder and qt 1 Intake Gasket

Carb Holder, 583-13565-01-00	
Intake Gasket, 583-13556-01-00	
SR500E/F/G/H	78-81
TT500C/D/E/F/G/H Offroad	76-81
XT500C/D/E/F/G/H Dual Sport	76-81

Yamaha

Carb Holder Kit FZ600 **Order No. 005-881**

Includes qt 2 LH Carb Holders, qt 2 RH Carb Holders and qt 4 Intake Gaskets

LH side, 1 & 2, 33M-13586-01-00	
RH side, 3 & 4, 33M-13596-01-00	
Intake Gasket, 33M-13556-00-00	
FZ600S/SC/T/TC/U/UC	86-88

Carb Holder Kit YX600 **Order No. 005-882**

Includes qt 2 LH Carb Holders, qt 2 RH Carb Holders and qt 4 Intake Gaskets

LH side 1 & 2, 33M-13586-01-00	
RH side, 3 & 4, 33M-13596-01-00	
Intake Gasket, 3KM-13556-00-00	
YX600S/SC/T/TC/U/UC/W/WC/A/AC Radian	86-90

Carb Holder Kit YZF750/FZR1000 **Order No. 005-883**

Includes qt 2 LH Carb Holders and qt 2 RH Carb Holders

LH side, 1 & 2, 3GM-13597-00-00	
RH side, 3 & 4, 3GM-13598-00-00	
YZF750RF/RFC	1994
YZF750RH/RHC/RJ/RJC/RK/RKC	96-98
FZR1000W/WC/A/AC/B/BC	89-91
FZR1000D/DC/E/EC/F/FC	92-95
YZF1000RJ/RJC	1997

Carb Holder Kit XS1100 **Order No. 005-879**

Includes qt 2 LH Carb Holders and qt 2 RH Carb Holders

LH side, 1 & 2, 2H7-13586-00-00	
RH side, 3 & 4, 2H7-13596-00-00	
XJ1100J Maxim	1982
(Intake gasket not available for XJ1100 model)	
XS1100E/F/G/H	78-81
XS1100LG/LH Midnight Special	80-81
XS1100SF/SG/SH Special	79-81

Carb Holder Kit TT/XT600 **Order No. 005-884**

Includes qt 1 LH Carb Holder, qt 1 RH Carb Holder and qt 2 Intake O-Rings

LH side, 43F-13586-01-00	
RH side, 43F-13596-01-00	
Intake O-Ring, 93210-36549	
TT600N Offroad	1985
XT600L/LC/N/NC/S/SC/T/TC/U/UC/W/WC Dual	84-89

Carb Holder Kit XS650 **Order No. 005-878**

Includes qt 1 LH Carb Holder qt 1 RH Carb Holder

LH Carb Holder, 447-13555-01-00	
RH Carb Holder, 447-13565-01-00	
TX650A	1974
XS650B/C/D	75-77

Sudco Intake Carb Holders

005-885

Yamaha

Carb Holder Kit XT600	**Order No. 005-885**
Includes qt 1 LH Carb Holder, qt 1 RH Carb Holder and qt 2 Intake O-Rings	
LH side, 43F-13586-01-00	
RH side, 1VJ-13596-00-00	
Intake O-Ring, 93210-36549	
XT600EA/EAC/EB/EBC/ED/EDC Dual Sport	90-92
XT600EE/EEC/EF/EFC/EG/EGC Dual Sport	93-95
Carb Holder Kit XS650	**Order No. 005-877**
Includes qt 1 LH Carb Holder and qt 1RH Carb Holder	
LH Carb Holder, 3G1-13586-00-00	
RH Carb Holder, 447-13596-00-00	
XS650G/H Special II	80-81
XS650SG/SH Special	80-81
XS650SJ/SK Heritage Special	82-83
Carb Holder Kit XVS650	**Order No. 005-886**
Includes qt 1 LH Carb Holder, qt 1 RH Carb Holder and qt 2 Intake O-Rings	
LH Carb Holder, 4TR-13586-01-00	
RH Carb Holder, 4TR-13596-01-00	
XVS650AK/AKC-AW/AWC V-Star 650 Classic	98-07
XV650AWC-B/AW-B V-Star 650 Classic w/flames	2007
XVS650AX/AXCL/AXCB V-Star 650 Classic	2008
XVS650AXB/AXCL/AXL V-Star 650 Classic	2008
XVS650AYCS/AYS/AYCW/AYW V-Star Classic	2009
XVS650AZCL/AZCR V-Star 650 Classic	2010
XVS650AZL/AZR V-Star 650 Classic	2010
XVS650K/KC-S/SC V-Star 650 Custom	98-04
XVS650TC-F/T-F V-Star 650 Custom w/flames	2005
XVS650V/VC/W/WC/X/XC V-Star 650 Custom	06-08
XVS650XCR/XR V-Star 650 Custom	2008
XVS650YCL/YL/ZCW/ZW V-Star 650 Custom	09-10
XVS650AB/ACB V-Star 650 Custom	2011
XVS650T-Z V-Star 650 Midnight Custom	05-10
XVS650ATR/ATRC-ATCB V-Star 650 Silverado	03-10
Carb Holder Kit XS750/850	**Order No. 005-888**
Includes qt 3 Carb Holders	
Carb Holder, 2F3-13586-01-00	
XS750E/F	78-79
XS750SE/SF Special	78-79
XS850G/H	80-81
XS850LG/LH Midnight Special	80-81
XS850SG/SH Special	80-81
Carb Holder Kit YZF-R1	**Order No. 005-887**
Includes qt 2 LH Carb Holders and qt 2 RH Carb Holders	
LH side 1 & 2, 4XV-13598-00-00	
RH side, 3 & 4, 4XV-13597-00-00	
YZF-R1K/KC/L/LC/M/MC/N/NC	98-01
YZF-R1SN/SNC Champions Limited Edition	2001

005-950 005-955

Carb Holder Clamp

Fits stock carb holder. Dark green color. ***Made in Japan.*** Sold each, and set/4.

Kawasaki

Carb Holder Clamp, each	**Order No. 005-950** (45.56mm I.D.)
Carb Holder Clamp, set/4	**Order No. 005-950S**
Z1/A/B-900	73-75
KZ900A4/A5	76-77
KZ1000A1/A2	77-78
KZ1000A3/A3A/A4 MKII	79-80
KZ1000B1/B2/B3/B4 LTD	77-78
KZ1000D1 Z1R	1978
KZ1000D3 Z1R	1980
KZ1000E1/E2 Shaft ST	79-80
Carb Holder Clamp, each	**Order No. 005-955** (52mm I.D.)
Carb Holder Clamp, set/4	**Order No. 005-955S**
KZ1000J1/J2/J3	81-83
KZ1000K1/K2 LTD	81-82
KZ1000M1/M2 CSR	81-82
KZ1000P1-P21 Police	82-02
KZ1000P24 Police	2005
KZ1100A1/A2/A3 Shaft	81-83
KZ1100D1/D2 Spectre	82-83
KZ1100L1 Shaft LTD	1983
ZN1100B1/B2 Shaft LTD	84-85
ZX1100A1/A2 GPz	83-84

Carb Holder Rubber Plugs

Universal rubber plug has many uses. ***Made in Japan.*** Sold pk/5.

Order No. 005-860

Sudco Carb Vacuum Fitting Cap

Replacement part for Mikuni RS Smoothbore carburetors. This rubber plug is found on many Yamaha models. ***Made in Japan.*** Sold each.

Order No. 002-646

Sudco Intake Carb Holder Dimensions

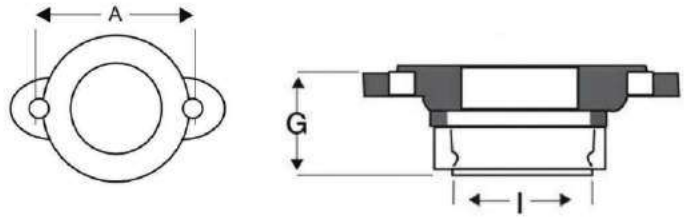

Kawasaki

Notes	OEM Reference	Bolt (A) Center	Inner (I) Diameter	Length (G)	Offset	Port Y/N
———	16035-1135	58mm	40mm	26mm	N	N
———	16065-028	58mm	32mm	30mm	N	Y
———	16065-029	58mm	32mm	30mm	N	Y
———	16065-1131	58mm	40mm	26mm	N	N
———	16065-1130	N/A	40mm/44mm	40mm	N	N
———	16065-1129	N/A	38mm/38mm	32mm	N	N
———	16065-1108	N/A	42mm/44mm	20mm	N	N
———	16065-1182	60mm	42mm	30mm	N	Y
———	16065-1210	60mm	46mm	46mm	N	N
———	16035-1182	60mm	42mm	30mm	N	N

Suzuki

———	13101-26E01	68mm	38mm	40mm	Y	N
———	13103-26E01	68mm	38mm	40mm	Y	N
———	13101-17C01	68mm	42mm	36mm	Y	N
———	13102-17C01	68mm	42mm	36mm	N	N
———	13103-17C01	68mm	42mm	36mm	N	N
———	13104-17C01	68mm	42mm	36mm	Y	N
———	13101-17D00	68mm	46mm	38mm	Y	N
———	13102-17D00	68mm	46mm	38mm	N	N
———	13103-17D00	68mm	46mm	38mm	N	N
———	13104-17D00	68mm	46mm	38mm	Y	Y
———	13101-40C00	68mm	42mm	40mm	Y	N
———	13102-40C00	68mm	42mm	40mm	N	N
———	13104-40C00	68mm	42mm	40mm	N	N
Angled	13101-17E01	68mm	46mm	45mm/33mm	N	N
Angled	13103-17E01	68mm	46mm	45mm/33mm	N	Y
Angled	13104-17E01	68mm	46mm	45mm/33mm	N	N

Yamaha

Slight Offset	2F3-13586-01-00	N/A	———	———	Y	N
Slight Angle	3G1-13586-00-00	70mm	———	———	N	Y
Slight Angle	3G1-13596-00-00	70mm	———	———	N	Y
Slight Angle	447-13555-01-00	70mm	———	———	N	N
Slight Angle	447-13565-01-00	70mm	———	———	N	N
Aggressive Offset	2H7-13586-00-00	65mm	———	———	Y	Y
Aggressive Offset	2H7-13596-00-00	65mm	———	———	Y	Y
———	583-13565-01-00	70mm	42mm	26mm	N	N
———	33M-13586-01-00	58mm	34mm	30mm	Y	Y
———	33M-13596-01-00	58mm	34mm	30mm	Y	Y
———	3GM-13597-00-00	N/A	44mm/44mm	23mm	N	N
———	3GM-13598-00-00	N/A	44mm/44mm	23mm	N	N
Slight Offset	43F-13586-01-00	65mm	36mm	38mm	Y	Y
Slight Offset	43F-13596-01-00	65mm	36mm	38mm	Y	N
Slight Offset	1VJ-13596-01-00	65mm	36mm	38mm	Y	N
Aggressive Offset	4TR-13586-01-00	65mm	32mm	50mm/75mm	Y	N
Aggressive Offset	4TR-13596-01-00	65mm	32mm	50mm/75mm	Y	N
———	4XV-13598-00-00	N/A	45mm/45mm	23mm	N	N
———	4XV-13597-00-00	N/A	45mm/45mm	23mm	N	N

KEIHIN Type Press-Fit Main Jets

Sudco Keihin Type Press-Fit Primary Main Jets

KEYSTER brand, after-market type jets.
Dealer kit includes qt 4 jets of sizes listed below.(Total 44 jets) with storage box. ***Made in Japan.***

Keihin Type Press-Fit Primary Main Jet Kit Order No. 026-090
Includes storage box and qt 4 each of the following size: #60, #62, #65, #68, #70, #72, #75, #82, #88, #90, #92

Keihin Type Press Fit Primary Main Jets with O-Ring

Sold each.

Size	Order No.	OEM Ref	Size	Order No.	OEM Ref
#60	026-010	99201-601-0600	#75	026-016	99201-601-0750
#62	026-011	99201-601-0620	#82	026-017	99201-601-0820
#65	026-012	99201-601-0650	#88	026-018	99201-601-0880
#68	026-013	99201-601-0680	#90	026-019	99201-601-0900
#70	026-014	99201-601-0700	#92	026-020	99201-601-0920
#72	026-015	99201-601-0720			

Honda

Model	Year
CB350G Super Sport	1973
CB350K0/K1/K2/K3/K4	68-73
CL350K0/K1/K2/K3/K4/K5	68-73
GL1000K Goldwing	75-79
GL1000L Goldwing LTD	1976

Sudco Keihin Type Press-Fit Secondary Main Jets

KEYSTER brand, after-market type jets.
Dealer kit includes qt 4 jets of sizes listed below.(Total 68 jets) with storage box. ***Made in Japan.***

Keihin Type Press-Fit Secondary Main Jet Kit Order No. 026-091
Includes storage box and qt 4 each of the following size: #68, #70, #72, #75, #78, #80, #98, #100, #105, #110, #115, #120, #125, #130, #135, #140, #150

Keihin Type Press Fit Secondary Main Jets with O-Ring Sold each.

Size	Order No.	OEM Ref	Size	Order No.	OEM Ref
#68	026-043	99202-601-0680	#110	026-054	99202-601-1100
#70	026-044	99202-601-0700	#115	026-055	99202-601-1150
#72	026-045	99202-601-0720	#120	026-056	99202-601-1200
#75	026-046	99202-601-0750	#125	026-057	99202-601-1250
#78	026-047	99202-601-0780	#130	026-058	99202-601-1300
#80	026-048	99202-601-0800	#135	026-059	99202-601-1350
#98	026-051	99202-601-0980	#140	026-060	99202-601-1400
#100	026-052	99202-601-1000	#150	026-062	99202-601-1500
#105	026-053	99202-601-1050			

Honda

Model	Year
CB350F/F1 Super Sport	72-74
CB350G Super Sport	1973
CB350K0/K1/K2/K3/K4	68-73
CL350K0/K1/K2/K3/K4/K5	68-73
CB400F Super Sport	75-77
CB500K0/K1/K2	71-73
CB550F Super Sport	75-77
CB550K0/K1	74-75
CB550K	1976
GL1000K Goldwing	75-79
GL1000L Goldwing LTD	1976

Kawasaki

KZ400A1 Deluxe	1977
KZ400/D/D3/D4	74-77
KZ400S/S2/S3 Special	75-77

Yamaha

TX500/A	73-74
XS500B	1975

008-001

008-002

Sudco Plastic Jet Boxes (Storage Boxes)

Two boxes available, 36 compartment and 18 compartment.
Use for valve shim storage, small parts, electrical connectors and carburetor jets. Sold each.

Description		Order No.
Jet Box with 36 Compartments	7-1/2" L x 10-1/2" L x 1-1/4" H	008-001
Jet Box with 18 Compartments	3-1/4" L x 6-3/4" L x 1-1/2" H	008-002

Hitachi Carburetor Parts

Sudco Hitachi Type Main & Pilot Jets

KEYSTER brand, aftermarket screw-in type jets for Yamaha applications. Dealer kit includes qt 4 jets of sizes listed below. (Total 56 jets) with storage box. ***Made in Japan.***

Hitachi Type Main & Pilot Jet Kit **Order No. 026-190**

Includes storage box and qt 4 each size of the following:

Main Jets: #110, #112, #116, #118, #120, #122, #124, #126, #128, #130, #132, #134, Pilot Jets: #40, #41

Hitachi Type Main Jets Sold each.

Size	OEM Reference	Order No.
#110	4H7-14925-10-00	026-110
#112	4H7-14925-12-00	026-111
#116	4H7-14925-16-00	026-113
#118	4H7-14925-18-00	026-114
#120	4H7-14925-20-00	026-115
#122	4H7-14925-22-00	026-116
#124	4H7-14925-24-00	026-117
#126	4H7-14925-26-00	026-118
#128	4H7-14925-28-00	026-119
#130	4H7-14925-30-00	026-120
#132	4H7-14925-32-00	026-121
#134	4H7-14925-34-00	026-122

Hitachi Type Pilot Jets Sold each.

Size	OEM Reference	Order No.
#40	4H7-14948-40-00	026-145
#41	4H7-14948-41-00	026-146

Yamaha

Model	Year
XJ650G/H/J/K Maxim	80-83
XJ650LH Midnight Maxim	1981
XJ650RJ Seca	1982
XJ700N/NC/S/SC Maxim	85-86
XJ750RH/RJ/RK Seca	81-83
XV700L/LC/N/NC Virago	84-85
XV700CS/CSC/CT/CTC Virago	86-87
XV700SS/SSC Virago	1986
XJ750J/K Maxim	82-83
XJ750MK Midnight Maxim	1983
XV750H/J/K Virago	81-83
XV750MK Midnight Virago	1983
XV920J/K Virago	82-83
XV920MK Midnight Virago	1983
XV920RH/RJ Euro	81-82
XV1000L/LC/N/NC	84-85
XV1100S/SC/T/TC Virago	86-87

Sudco Hitachi Type Needle Valve Assemblies

KEYSTER brand, after-market type needle valve assemblies for Yamaha applications. Sold each. ***Made in Japan.***

Application	OEM Reference	Order No.
XS850 (80-81)	3J3-W1496-20-00	026-300
XJ650/XJ750/XV750/XV920	10L-14390-02-00	026-302
See 10L-14390-02-00	42H-14390-00-00	026-302

Sudco Hitachi Float Bowl Gaskets

After-market type for Yamaha applications. Sold each. ***Made in Japan.***

Application	OEM Reference	Order No.
XJ650/XJ750 (80-83)	4H7-14984-01-00	026-320
XV750 (81-83),XV920 (1982)	4X7-14984-01-00	026-322
XV1000 (84-85)	10L-14984-01-00	026-324
XS850 (80-81)	3J3-14984-00-00	026-326

Yamaha

Model	Year	Needle Valve	Float Bowl Gasket
XJ650G/H/J/K Maxim	80-83	026-302	026-320
XJ650LH Midnight Maxim	1981	026-302	026-320
XJ650RJ Seca	1982	026-302	026-320
XJ700N/NC Maxim	1985	026-302	026-320
XJ700S/SC Maxim	1986	026-302	026-320
XJ750J/K Maxim	82-83	026-302	026-320
XJ750MK Midnight Maxim	1983	026-302	026-320
XJ750RH/RJ/RK Seca	81-83	026-302	026-320
XV750H/J/K Virago	81-83	026-302	026-322
XV750MK Midnight Virago	1983	026-302	026-322
XS850G/H	80-81	026-300	026-326
XS850LG/LH Midnight Special	80-81	026-300	026-326
XS850SG/SH Special	80-81	026-300	026-326
XV920J Virago	1982	026-302	026-322
XV920K Virago	1983	026-302	026-324
XV920MK Midnight Virago	1983	026-302	026-324
XV920RH/RJ	81-82	026-302	026-322
XV1000L/LC/N/NC Virago	84-85	026-302	026-324
XV1100S/SC/T/TC Virago	86-87	026-302	026-324

Sudco Carburetor Hardware & O-Rings

Sudco Mikuni Carburetor O-Rings

Genuine OEM MIKUNI carburetor o-rings. ***Made in Japan.***

Order No. 007-945
Sudco Mikuni Carburetor Dealer O-Ring Kit
Kit includes qt 5 each part number listed below.
(Total qt 75 o-rings and plastic storage box)

Size Inside (mm) O-Ring Description	Mikuni Inside x Thickness	Reference	Order No.
	3.55 I.D. x 1.78mm	BV32/04	002-212
Drain Plug	19.50 I.D. x 1.52mm	VM/28/254	002-531
	17.50 I.D. x 1.52mm	BNO42/64	002-602
	8.70 I.D. x 1.95mm	BV30/40	002-617
Starter Plunger	8.50 I.D. x 1.55mm	VM18/249	002-672
Pilot Air Screw	2.50 I.D. x 1.55mm	VM14/75	002-676
Fuel Joint & Needle Vlv.	7.5 I.D. x 1.53mm	KV/10	002-709
	19.60 I.D. x 2..43mm	VM26/227	002-825
Needle Valve	6.70 I.D. x 1.35mm	VM24/559	002-838
Pilot Air Screw	2.70 I.D. x 1.13mm	N133.037	002-858
Starter/Choke	10.25 I.D. x 1.35mm	N138.198	007-160
	1.80 I.D. x 1.15mm	N124.063	007-163
Fuel Joint	6.25 I.D. x 1.83mm	616-23002	007-182
	3.05 I.D. x 1.35mm	B30/205	007-188
Needle Valve	8.47 I.D. x 1.53mm	616-33003	007-470

Sudco Keihin Carburetor O-Rings

Genuine OEM KEIHIN carburetor o-rings. ***Made in Japan.***

Order No. 018-905
Sudco Keihin Carburetor Dealer O-Ring Kit.
Kit includes qt 5 of each part number listed below.
(Total qt 65 o-rings and plastic storage box)

O-Ring Description	Size (mm) Inside x Thickness	Keihin Reference	Order No.
	18.50 I.D. x 2.85mm	16173-001-0040	018-664
	7.90 I.D. x 1.40mm	16075-MB0-0030	018-694
	2.65 I.D. x 1.90mm	0901-006-6000	018-722
Fuel T-Joint	5.65 I.D. x 1.33mm	W9351-13057	018-755
Pilot Screw	2.70 I.D. x 1.20mm	16075-KG8-9010	021-043
M1 Needle Seat	9.10 I.D. x 1.30mm	16958-397-7710	021-047
U-Ring.	3.55 I.D. x 1.95mm	W9353-36000	021-067
Accelerator Pump	4.0 I.D. x 1.05mm	W9353-11042	021-070
	5.80 I.D. x 1.90mm	16178-548-0040	021-071
U-Ring.	6.35 I.D. x 2.95mm	W9353-6500	021-097
Drain Bolt	15.15 I.D. x 1.95mm	16075-935-0060	021-109
Choke O-Ring	8.95 I.D. x 1.35mm	0901-069-6000	021-527
	11.75 I.D. x 1.94mm	16978-ZB9-0050	021-732

Sudco Carburetor Screws

Genuine carburetor screws in different sizes.
Use for float bowl, top cover. Sold each.
Made in Japan.
CW2 = with lock washer C2 = screw only

Application	Size	Mfg. No.	Order No
Cable Holder Screw	2.6 x 8mm	CW2=2608	007-265
Needle Valve Holder Screw	3 x 6.5mm	VM13/216	007-174
	3 x 8mm	CW2=0308	002-479
Throttle Valve Screw	3 x 10mm	CW2=0310	002-752
Top Cover Screw	4 x 8mm	CW2=0408	007-175
Top Cover Screw TM33	4 x 10mm	CW2=410	007-626
Top Cover Screw HSR42	4 x 10mm	C5-0410B	007-624
Torx Screw	4 x 12mm	VM38/133	002-749
Float Bowl Screw	4 x 12mm	CW2=0412	002-748
Float Bowl Screw	4 x 12mm	C2=0412-B	007-201
Float Bowl Screw	4 x 14mm	CW2=0414	002-522
Float Bowl Screw short TM33	4 x 14mm	C2=0414	007-621
Float Bowl Screw long TM33	4 x 16mm	C2=0416	007-622
Float Bowl Screw	4 x 16mm	CW2=0416	002-823
Float Bowl Screw	4 x 16mm	CW2=0416-B	002-615
Float Bowl Screw	5 x 14mm	C2=0514-B	007-698
Float Bowl Screw	5 x 14mm	CW2=0514	002-516
Float Bowl Screw	5 x 16mm	CW2=0516	002-373
Float Bowl Screw	5 x 18mm	CW2=0518	002-719

008-001

008-002

Sudco Plastic Jet Boxes (Storage Boxes)

Two boxes available, 36 compartment and 18 compartment.
Use for valve shim storage, small parts, electrical connectors and carburetor jets. Sold each.

Description	Order No.
Jet Box with 36 Compartments 7-1/2" L x 10-1/2" L x 1-1/4" H	008-001
Jet Box with 18 Compartments 3-1/4" L x 6-3/4" L x 1-1/2" H	008-002

Nitrous Express

040-60005

040-60033

Nitrous Express Systems

Whether you want just a little help with your Sportbike, Street or Drag Racer, Bonneville rocket, ATV, Snowmobile or watercraft, Nitrous Express is the system Pro's use. Complete kits available.

ATV, Offroad, Snowmobile & Personal Watercraft

Description	Order No.
1 Cylinder Piranha Nozzle 2.5 lb./2 ft. with out Fuel Pump	040-60001
1 Cylinder Piranha Nozzle 2.5 lb./2 ft. with Fuel Pump	040-60011
2 Cylinder Twin Piranha Nozzle 2.5 lb./2 ft. with Fuel Pump	040-60002
3 Cylinder Piranha Nozzle 2.5 lb./2 ft. with Fuel Pump	040-60033
4 Cylinder Piranha Nozzle 2.5 lb./2 ft. with Fuel Pump	040-60005
4 Cylinder Pro Modified/Funny Bike Piranha Nozzle 2.5 lb./2 ft. with Fuel Pump	040-60006

HARLEY-DAVIDSONÆ & CRUISERS

Description	Order No.
H-D® Stage One Piranha Nozzle 2.5 lb./2 ft. w/Fuel Pump	040-60022
H-D® Show Polished Dual Bottles & Billet Brackets 2.-1.4 lb./2 ft. w/Fuel Pump	040-60122
H-D® Show Polished Dual Bottles & Billet Brackets 2.-10 oz./2 ft. w/Fuel Pump	040-60123

Motorcycles & Sportbikes

Description	Order No.
2 Cylinder Twin Piranha Nozzles 2.5 lb./2 ft. w/Fuel Pump	040-60002
3 Cylinder Piranha Nozzles 2.5 lb./2 ft. with Fuel Pump	040-60033
4 Cylinder Piranha Nozzles 2.5 lb./2 ft. with Fuel Pump	040-60005
4 Cylinder Pro Modified/Funny Bike Piranha Nozzle 2.5 lb./2 ft. with Fuel Pump	040-60006
4 Cylinder Piranha conversion with Stainless Steel Braided Lines and Shower Heads	040-NX400S
Suzuki Hayabusa 2.5 lb./2 ft. with Fuel Pump	040-60007

Nitrous Express Nitrous Bottles

Highest flowing bottle valve on the market.
Available in the following sizes:

Nitrous Bottles

Description	Order No.
16 oz. Bottle with Motorcycle Valve	040-11010
10 oz. Bottle with Motorcycle Valve	040-11022
1.4 lb. Bottle with Motorcycle Valve	040-11023
1.4 lb. Bottle with Motorcycle Valve (show polished)	040-11024
2.5 lb. Bottle with Motorcycle Valve	040-11025
2.0 lb. Bottle with Motorcycle Valve	040-11030
5.0 lb. Bottle with Motorcycle Valve	040-11055

NITROUS EXPRESS
NEXT GENERATION NITROUS SYSTEMS

007-783

007-782

007-785

007-781

Carb Pump Diaphragm Valve Sets

Each set contains one diaphragm with rod attached, one rubber boot for rod, spring and o-ring as required. Sold as a set, three or four piece as noted. ***Made in Japan.***

Honda

OEM Reference 16021-ME2-771 (4 pc. set) **Order No.** 007-783
1602-MG1-671 - Diaphragm with 55.60mm long rod, spring, rubber boot for rod, and o-ring for passageway.

Model	Year
CX650C	1983
GL650	1983
GL650I	1983
CB1000C	1983
CB1100F Super Sport	1983

OEM Reference 16021-679-005 (3 pc. set) **Order No.** 007-782
Diaphragm with 54.01mm long rod, spring, rubber boot for rod.

Model	Year
CB750C Custom	80-82
CB750F Super Sport	79-82
CB750K	79-82
CB750L LTD	1979
CB750SC Nighthawk 750	82-83
CB900C Custom	80-82

OEM Reference 16021-MW8-000 (3 pc. set) **Order No.** 007-785
16021-MN5-0074, 16021-MT8-000, 16021-MAM-A80
Diaphragm with 31.31mm long rod, spring, rubber boot for rod.

Model	Year
GL1500 Goldwing	88-90
GL1500A Goldwing Aspencade	91-00
GL1500I Goldwing Interstate	91-96
GL1500SE Goldwing SE	90-00

007-784

OEM Reference 16021-422-004 (3 pc. set) **Order No.** 007-784
Diaphragm with 50.88mm long rod, spring, rubber boot for rod.

Model	Year
CBX1000 (1047cc) Super Sport	79-82

Honda

OEM Reference 16021-413-751 (4 pc. set) **Order No.** 007-781
16021-438-671, 16021-463-004 - Diaphragm with 54.13mm long rod, spring, rubber boot for rod.

Model	Year
CM250C Custom	1983
CB400T Hawk	80-81
CM400A Automatic	80-81
CM400C Custom	1981
CM400E	80-81
CM400T	80-81
CB450SC Nighthawk	1982
CB450T Hawk	1982
CM450C Custom	1982
CM450E	1982
CX500C Custom	80-82
CX500D Deluxe	80-81
GL500 Silverwing	81-82
GL500I Silverwing Interstate	81-82
CB900F Super Sport	81-82
GL1100 Goldwing	80-83
GL1100A Goldwing Aspencade	82-83
GL1100I Goldwing Interstate	80-83

007-780

OEM Reference 16021-MC9-771 (3 pc. set) **Order No.** 007-780
16021-393-004, 16021-393-014 - Diaphragm with 89.46mm long rod, spring, rubber boot for rod.

Model	Year
CB450SC Nighthawk	1983
CB450SC Nighthawk	85-86
CM450E	1983
CB750A Automatic	76-78
CB750F Super Sport	77-78
CB750K	77-78

MIKUNI Carb Slide Diaphragms

007-770

007-771

007-773

007-775

007-772

007-774

007-776

Sudco Mikuni Carb Slide Diaphragms

GENUINE Mikuni Carb Slide Diaphragms for models listed. Fits OEM carburetors. ***Made in Japan.*** Sold each.

Suzuki

Carb Slide Diaphragm 13507-17C01, 13507-17C00
Diaphragm rubber only, no slide body

Order No. 007-776

Model	Year
DR-Z400EK4-EK7 (California models, E33)	04-07
DR-Z400K4/K5/K6 Offroad (California models, E33)	04-06
DR-Z400SY/SK1-SK9 Dual Sport	00-09
DR-Z400SL1/SL2 Dual Sport	11-12
DR-Z400SMK5/SMK6/SMK7/SMK8/SMK9 Supermotard	05-09
GS500EK-EK2	89-02
GS500FK4/FK5/FK6/FK7/FK8/FK9	04-09
GS500HK7/HK8/HK9 (naked)	07-09
GSX600FJ-FV Katana	88-97
GSX-R600WN/WP	92-93
GSX-R600V/W/X/Y	97-00
RF600RR/RS/RT	94-96
GSX750FK-FK2 Katana	89-02
GSX750FK3/FK4/FK5/FK6	03-06
GSX-R750J/K/L/M/N (California model)	89-92
GSX-R750WP/WR/WS (California model)	93-95
GSX-R750T/V	96-97
RF900RR/RS/RZS/RT/RV	94-97
GSX1100GM/GN/GP Shaft	91-93
GSX-R1100K/L/M/N	89-92
GSX-R1100WP/WR/WS/WT/WV/WV	93-98
GSF1200SV/SAV/SW/SX/SY/SK1/SK2 Bandit	97-02
GSF1200SK3/SK4/SK5/SK6 Bandit	03-06
VL1500W/X/Y Intruder LC	98-00
VL1500K1/K2/K3/K4 Intruder LC	01-04

Yamaha

Carb Slide Diaphragm 41R-14940-09-00

Order No. 007-775

Model	Year
XV535A/AC Virago	1990
XV535E/EC/F/FC/G/GC Virago	93-95
XV535H/HC/J/JC Virago	96-97
XV535SF/SFC/SG/SGC Virago	94-95
XV535SH/SHC/SJ/SJC/SK/SKC Virago	96-98
XV535L/LC/M/MC Virago 535	99-00
XVZ12TK/L/KC2 Venture	83-84
XVZ12TDK Venture Royale	1983
XVZ12DN Venture Royale	1985

Yamaha

Carb Slide Diaphragm 2F3-14940-00-00, 2A2-14940-00-00

Order No. 007-770

Model	Year
XS400D/E/2E/F/2F	77-79
XS750E/F	78-79
XS750SE/SF Special	78-79
XS1100E/F	78-79
XS1100SF Special	1979

Carb Slide Diaphragm 1FK-14940-09-00

Order No. 007-771

VMX12N/NC/S/SC V-Max	85-86
VMX12U/UC/W/WC/A/AC/B/BC V-Max	88-91
VMX12D/DC/E/EC/F/FC/G/GC V-Max	92-95
VMX12H/HC/J/JC/K/KC/L/LC V-Max	95-99
VMX12M/MC/N/NC/P/PC/R/S/SC V-Max	00-04
VMX12T/TC/V/VC/W1/W1C V-Max	05-07
XVZ13T/TC/U/UC Venture	87-88
XVZ13DS/DSC/DT/DTC Venture Royale	86-87
XVZ13DU/DUC/DW/DWC Venture Royale	88-89
XVZ13DA/DAC/DB/DBC Venture Royale	90-91
XVZ13DD/DDC/DE/DEC Venture Royale	92-93

Carb Slide Diaphragm 3F7-14940-00-00, 3H5-14940-00-00

Order No. 007-772

SR250G/H/J Exciter	80-82
SR250TH Exciter	1981
XS650G/H Special II	80-81
XS650SG/SH Special	80-81
XS650SJ/SK Heritage Special	82-83
XJ900RK Seca	1983
XJ1100J Maxim	1982
XS1100G/H	80-81
XS1100LG/LH Midnight Special	80-81
XS1100SG/SH Special	80-81

Carb Slide Diaphragm 50H-14940-00-00,

Order No. 007-773

FJ1100L/LC/N/NC	84-85
FJ1200S/SC/T/TC	86-87
FJ1200W/WC/A/AC/B/BC/D/DC	89-92
FJ1200AD/ADC/AE/AEC (ABS)	92-93

Carb Slide Diaphragm 256-14940-00-00, 256-14940-01-00

Order No. 007-774

XS500C/D	76-77
XS1/XS1-B/XS2-650	70-72
TX650/A	73-74
XS650B/C/D	75-77

KEIHIN & MIKUNI Accelerator Pump Rebuild Kits

Accelerator Pump Rebuild Kit for Kawasaki KZ650/KZ1000

Eight piece kit fits Kawasaki Vintage models listed from 1979-1981.
Made in Japan.

Order No. 018-863

Kawasaki OEM Mikuni VM Carburetor

Qt	OEM Reference	Description
Qt.1	43028-1012	Carb Pump Diaphragm (square)
Qt.1	43028-1010	Carb Pump Sensor Diaphragm (triangular)
Qt.1	92081-1137	Carb Pump Sensor Diaphragm Spring
Qt.1	92081-1139	Carb Pump Diaphragm Spring
Qt.1	16038-016	Check Valve O-ring
Qt.1	92037-1123	Check Valve Clamp Spring (clip)
Qt.1	13042-1004	Check Valve Weight
Qt.1	92140-1003	Check Valve Ball (steel)

Applications, Kawasaki OEM Mikuni VM only	Year
KZ650B3/C3/D2	1979
KZ650E1 LTD	1980
KZ650F1	1980
KZ650H1 CSR	1981
KZ1000A3/A3A/A4 MKII	79-80
KZ1000B3/B4 LTD	79-80
KZ1000C2/C3/C4 Police	79-81
KZ1000D3 Z1R	1980
KZ1000E1/E2 Shaft ST	79-80

Sudco Accelerator Pump Rebuild Kit for Kawasaki Cruisers

Five piece kit fits Kawasaki Vulcan Cruiser models listed.
Made in Japan.

Order No. 018-864

Kawasaki OEM Keihin CVK Carburetor

Qt	OEM Reference	Description
Qt1	43028-0002	Diaphragm
Qt1	92081-1092	Spring
Qt1	92093-1046	O-Ring ("U" Ring)
Qt2	223D0410	Pan Head Screw 4 x 10mm

Applications: Kawasaki OEM Keihin CVK only	Year
EJ650A2/A3 W650	00-01
VN800A1/A2/A3/A4/A5/A6 Vulcan 800	95-00
VN800A7/A8/A9/A10/A11 Vulcan 800	01-05
VN800B1/B2/B3/B4/B5 Vulcan 800 Classic	96-00
VN800B6/B7/B8/B9 Vulcan 800 Classic	01-04
VN800C1/C2 Vulcan 800 Drifter	99-00
VN800E1/E2/E3/E4/E5 Vulcan 800 Drifter	01-05
VN800E6F Vulcan 800 Drifter	2006
VN1500D1/D2 Vulcan 1500 Classic	96-97
VN1500E1/E2/E3 Vulcan 1500 Classic	98-00
VN1500E4/E5 Vulcan 1500 Classic	01-02
VN1500E6/E7 Vulcan 1500 Classic	03-04
VN1500G1/G1A/G1AL/G1L Vulcan 1500 Nomad	1999
VN1500G2A/G2AL Vulcan 1500 Nomad	2000
VN1500G3/G3L Vulcan 1500 Nomad	2001

Factory R&D P-38 Lightning Accelerator Pump Cover

Factory R&D P-38 Lightning is a high-performance, bolt-on accelerator cover plate that cures that annoying hesitation and stumbling while adding horsepower and throttle response. Sold each.

Honda

Model	Carburetor	Year	Factory R&D No.	Order No.
CRF250R/X	FCR-MX	04-07	P-38#4	024-006
CRF450R	FCR-MX	02-03	P-38#3	024-005
CRF450R	FCR-MX	2004	P-38#9	024-011
CRF450R	FCR-MX	05-06	P-38#10	024-012
CRF450R	FCR-MX	2007	P-38#4	024-006
CRF450X	FCR-MX	2004	P-38#9	024-011
CRF450X	FCR-MX	05-06	P-38#10	024-012
CRF450X	FCR-MX	2007	P-38#4	024-006
TRX450R ATV	FCR-MX	2006	P-38#9	024-011

Kawasaki

KX250F	FCR-MX	04-05	P-38#7	024-009
KX250F/KX450F	FCR-MX	06-07	P-38#8	024-010

KTM

250/400	FCR-H	00-04	P-38#167	024-014
250 F	FCR-MX	03-04	P-38#167	024-014
520	FCR-H	00-02	P-38#167	024-014
525	FCR-MX	03-06	P-38#7	024-009

Suzuki

RM-Z250F	FCR-MX	04-06	P-38#7	024-009
RM-Z450F	FCR-MX	05-07	P-38#9	024-011

Yamaha

WR250F	FCR-MX	03-07	P-38#9	024-011
YZ250F	FCR-MX	01-02	P-38#3	024-005
YZ250F	FCR-MX	03-07	P-38#9	024-011
YZ426F	FCR-MX	01-02	P-38#3	024-005
WR450F	FCR-MX	03-06	P-38#9	024-011
WR450F	FCR-MX	2007	P-38#6	024-008
YZ450F	FCR-MX	03-06	P-38#9	024-011
YZ450F	FCR-MX	2007	P-38#6	024-008

KEIHIN OEM Accelerator Pump Rebuild Kits

018-860

018-861

Sudco Accelerator Pump Rebuild Kits for Keihin FCR Carburetors

Genuine "KEIHIN" replacement parts. Kits include diaphragm, spring, "u-ring," o-ring, and 4 x 8mm screws.
Kits available for Keihin FCR Downdraft & Horizontal carburetors, and Keihin FCR-MX carburetors. ***Made in Japan.***

Keihin FCR Downdraft & Horizontal Carb all

Order No. 018-860

Accelerator Pump Rebuild Kit - 8 piece Kit

Qt	OEM Reference	Description
Qt1	1201-858-2400	Diaphragm
Qt1	1300-142-2000	Spring
Qt1	W9353-36000	U Ring
Qt1	W9351-19058	O-Ring
Qt1	1458-858-201	Rubber Cap
Qt3	0136-808-1100	4 x 8mm Allen Screw

Keihin FCR - MX Carb 37, 39, 41mm all

Order No. 018-861

Accelerator Pump Rebuild Kit - 8 piece Kit

Qt	OEM Reference	Description
Qt1	1201-858-2700	Diaphragm
Qt1	1300-142-2000	Spring
Qt1	W9353-36000	U Ring
Qt1	W9351-19058	O-Ring
Qt1	1458-858-201	Rod
Qt3	0136-808-1100	4 x 8mm Allen Screw

Keihin FCR - MX Carb Honda 16020-KRN-671

Order No. 018-862

Accelerator Pump Rebuild Kit - 8 piece Kit

Qt	OEM Reference	Description
Qt1	1201-858-2700	Diaphragm
Qt1	1300-142-2000	Spring
Qt1	W9353-36000	U Ring
Qt1	W9351-19058	O-Ring
Qt1	1458-858-201	Rod
Qt3	CW2=0408	4 x 8mm Screw

Model	Year
CRF250R	2004
CRF250X	04-06
CRF450R	2002

Keihin FCR-MX Carb Suzuki 13480-35G00

Order No. 018-862

Accelerator Pump Rebuild Kit - 8 piece Kit

Qt	OEM Reference	Description
Qt1	1201-858-2700	Diaphragm
Qt1	1300-142-2000	Spring
Qt1	W9353-36000	U Ring
Qt1	W9351-19058	O-Ring
Qt1	1458-858-201	Rod
Qt3	CW2=0408	4 x 8mm Screw

Model	Year
RM-Z450K5/K6/K7	05-07

Keihin FCR - MX Carb Yamaha 5JG-14940-17-00

Order No. 018-862

Accelerator Pump Rebuild Kit - 8 piece Kit

Qt	OEM Reference	Description
Qt1	1201-858-2700	Diaphragm
Qt1	1300-142-2000	Spring
Qt1	W9353-36000	U Ring
Qt1	W9351-19058	O-Ring
Qt1	5JG-14379-00-00	Starter Rod
Qt3	CW2=0408	4 x 8mm Screw

Model	Year
ATV	
YFZ450BB Bill Balance Edition	06-07
YFZ450LES Limited Edition	2004
YFZ450S/T/V/W	04-07
YFZ450SET/SPV Special Edition	05-06
Offroad	
YZ426FN/FP	01-02
YZ450FR	2003
YZ450FSPV 50TH Anniversary	2006
YZ450FT/FV/FW/FX/FXLFXW	05-08
YZ450FYL/FYW	2009

KEIHIN & MIKUNI Air Cut-Off Valves Sets

010-102 010-103 010-104 010-105 010-114

Air Cut-Off Valve Sets NEW

Direct OE style replacement carburetor air cut off valve set. Includes; diaphragm, spring and o-ring. Located on the side of the carburetor, the air cut off valve prevents lean fuel mixture (backfire) when decelerating. Temporarily closes the pilot jet airway to provide a richer mix as the throttle closes. Sold in sets for one carburetor.

Honda Street

Model	Year	OEM Reference Air Cut-Off Valve	Order Number
XL250R Dual Sport	82-83	16048-KB7-90	010-105
XL250S Dual Sport	78-79	16048-413-004	010-103
XL250S Dual Sport	80-81	16048-443-901	010-104
VTR250 Interceptor	1988	16048-MM5-671	010-119
VTR250 Interceptor	89-90	16048-MR7-004	010-119
CB400A Automatic	1978	16048-413-004	010-103
CB400T	80-81	16048-443-901	010-104
CB400T1 Hawk	78-79	16048-413-004	010-103
CB400TII Hawk	1979	16048-413-004	010-103
CM400A Automatic	1979	16048-413-004	010-103
CM400A Automatic	80-81	16048-443-901	010-104
CM400C Custom	1981	16048-443-901	010-104
CM400E	80-81	16048-443-901	010-104
CM400T	1979	16048-413-004	010-103
CM400T	80-81	16048-443-901	010-104
CB450SC Nighthawk	82-83	16048-443-901	010-104
CB450SC Nighthawk	1985	16048-443-901	010-104
CB450T Hawk	1982	16048-443-901	010-104
CM450A Automatic	82-83	16048-443-901	010-104
CM450C Custom	1982	16048-443-901	010-104
CM450E	82-83	16048-443-901	010-104
CX500	78-79	16048-413-004	010-103
CX500C Custom	1979	16048-413-004	010-103
CX500C Custom	80-82	16048-443-901	010-104
CX500D Deluxe	1979	16048-413-004	010-103
CX500D Deluxe	80-81	16048-443-901	010-104
FT500 Ascot Single	82-83	16048-KB7-901	010-105
GL500 Silverwing	81-82	16048-443-901	010-104
GL500I Silverwing Interstate	81-82	16048-443-901	010-104
XL500R Dual Sport	1982	16048-KB7-901	010-105
XL500S Dual Sport	78-79	16048-443-901	010-104
CBR600F Hurricane (CA Only)	87-89	16048-MM5-671	010-119
VT600C Shadow VLX	89-97	16048-MR1-305	010-115
VT600C Shadow VLX Deluxe	93-98	16048-MR1-305	010-115
CB650	1979	16048-428-305	010-102
CB650	1980	16048-443-901	010-104
CB650C Custom	1980	16048-443-901	010-104
CX650C Custom	1983	16048-KB7-901	010-105
GL650 Silverwing	1983	16048-KB7-901	010-105
GL650I Silverwing Interstate	1983	16048-KB7-901	010-105
NT650 Hawk GT	88-91	16048-MR1-305	010-115
CB750C Custom	80-82	16048-443-901	010-104

Honda Street

Model	Year	OEM Reference Air Cut-Off Valve	Order Number
CB750F Super Sport	1979	16048-428-305	010-102
CB750F Super Sport	80-82	16048-443-901	010-104
CB750K	1979	16048-428-305	010-102
CB750K	80-82	16048-443-901	010-104
CB750L LTD	1979	16048-428-305	010-102
CB750SC Nighthawk 750	82-83	16048-443-901	010-104
VFR750F	90-93	16048-MM5-671	010-119
VTF750R RC30	1990	16048-MR7-004	010-119
PC800 Pacific Coast	89-90	16048-MR1-305	010-115
PC800 Pacific Coast	94-98	16048-MR1-305	010-115
CB900C Custom	80-82	16048-443-901	010-104
CB900F Super Sport	81-82	16048-443-901	010-104
CB1000C Custom	1983	16048-KB7-901	010-105
CBR1000F Hurricane	87-88	16048-MM5-671	010-119
CB1100F Super Sport	1983	16048-KB7-901	010-105
GL1100 Gold Wing	80-83	16048-443-901	010-104
GL1100A Gold Wing Aspencade	82-83	16048-443-901	010-104
GL1100I Gold Wing Interstate	80-83	16048-443-901	010-104
ST1100	91-02	16048-MM5-671	010-119
ST1100A ABS	92-02	16048-MM5-671	010-119
VT1100C Shadow 1100	1987	16048-MM8-405	010-114
VT1100C Shadow 1100	88-90	16048-MM8-772	010-114
VT1100C Shadow 1100	92-96	16048-MM8-772	010-114
VT1100C Shadow 1100 Spirit	97-03	16048-MAH-670	010-114
VT1100C2 Shadow 1100 ACE	95-99	16048-MAH-670	010-114
VT1100C2 Shadow Sabre	00-03	16048-MAH-610	010-114
VT1100C2-2 Shadow 1100	1997	16048-MAH-670	010-114
VT1100C3 Shadow Aero	98-02	16048-MAH-610	010-114
VT1100D2 Shadow 1100 ACE	1999	16048-MAH-670	010-114
VT1100T Shadow ACE Tourer	98-01	16048-MAH-610	010-114

Honda Dual Sport & Offroad

CRF230F	04-09	16048-KB7-901	010-105
XL250R Dual Sport	82-83	16048-KB7-901	010-105
XL250S Dual Sport	78-79	16048-413-004	010-103
XL250S Dual Sport	80-81	16048-443-901	010-104
XR250	1979	16048-428-305	010-102
XR250	1980	16048-443-901	010-104
XR250R	81-82	16048-443-901	010-104
XR250R	86-04	16048-KB7-901	010-105
XR350R	1985	16048-KB7-901	010-105
XL500R Dual Sport	1982	16048-KB7-901	010-105
XL500S Dual Sport	79-81	16048-443-901	010-104
XR500	79-80	16048-443-901	010-104
XR500R	81-82	16048-443-901	010-104
XR600R	88-00	16048-KB7-901	010-105

KEIHIN & MIKUNI Air Cut-Off Valve Sets

010-115

010-119

010-109

010-110

010-113

Kawasaki Street

Model	Year	OEM Reference Air Cut-Off Valve	Order Number
EL250B2/B3 Eliminator	88-89	43028-0016	010-108
EL250E1 250HS Eliminator	91-94	43028-0016	010-108
EX250E1/E2 Ninja 250R	86-87	43028-0016	010-108
EX250F1/F2/F3 Ninja 250R	88-90	43028-0016	010-108
EX250F6-F19 Ninja 250R	92-05	43028-0016	010-108
EX250F6F/F7F Ninja 250R	06-07	43028-0016	010-108
EX250J8F/J9F Ninja 250R	08-09	43028-0016	010-108
EX250JAF/JBF/JCF Ninja 250R	10-12	43028-0016	010-108
KL600A1 KLR600 Dual Sport	1984	43028-0016	010-108
KL600B1/B2 KLR600 Dual Sport	85-86	43028-0016	010-108
KL650A1-A19 KLR650 Dual Sport	87-05	43028-0016	010-108
KL650A6F/A7 KLR650 Dual Sport	06-07	43028-0016	010-108
KL650E8F/E9F KLR650 Dual Sport	08-09	43028-0016	010-108
KL650EAF/EBF/ECF KLR650	10-12	43028-0016	010-108
KL650B2/B3 Tengai KLR650	90-91	43028-0016	010-108
KLX650C1/C2/C3/C4 Dual Sport	93-96	43028-0016	010-108
VN700A1 Vulcan 700	1985	43028-0016	010-108
VN750A2-A21 Vulcan 750	86-05	43028-0016	010-108
VN750A6F Vulcan 750	2006	43028-0016	010-108
VN800A1-A10 Vulcan 800	95-05	43028-0016	010-109
VN800B1-B10 Vulcan 800 Classic	96-05	43028-0016	010-109
VN800C1/C2 Vulcan 800 Drifter	99-00	43028-0016	010-109
VN800E1-E5 Vulcan 800 Drifter	01-05	43028-0016	010-109
VN800E6F Vulcan 800 Drifter	2006	43028-0016	010-109
ZG1000A1-A20 Concours	86-05	43028-0016	010-108
ZG1000A6F Concours	2006	43028-0016	010-108
ZL1000A1 Eliminator	1987	43028-0016	010-108
VN1500A1-A9 Vulcan 88	87-95	43028-0016	010-108
VN1500A10-A13 Vulcan 1500	96-99	43028-0016	010-108
VN1500B1/B2/B3/B4 Vulcan 88 SE	87-90	43028-0016	010-108
VN1500C3/C4 Vulcan 1500L	96-97	43028-0016	010-108
VN1500D1/D2 Vulcan 1500 Classic	96-97	43028-0016	010-108
VN1500E1-E7 Vulcan 1500 Classic	98-04	43028-0016	010-109
VN1500G Vulcan 1500 Nomad	99-01	43028-0016	010-109

Kawasaki Dual Sport & Offroad

KLX300A2-A10 KLX300R	97-05	43028-0016	010-108
KLX300A6F KLX300R	2006	43028-0016	010-108
KLX400A1 KLX400SR Dual Sport	2003	43028-S003	010-108
KLX400A2 KLX400SR (Canada)	2004	43028-S003	010-108
KL600A1 KLR600 Dual Sport	1984	43028-0016	010-108
KL600B1/B2 KLR600 Dual Sport	85-86	43028-0016	010-108
KL650A1-A19 KLR650 Dual Sport	87-05	43028-0016	010-108
KL650A6F/A7 KLR650 Dual Sport	06-07	43028-0016	010-108
KL650E8F/E9F KLR650 Dual Sport	08-09	43028-0016	010-108
KL650EAF/EBF/ECF KLR650	10-12	43028-0016	010-108
KL650B2/B3 Tengai KLR650	90-91	43028-0016	010-108
KLX650C1/C2/C3/C4 Dual Sport	93-96	43028-0016	010-108

Suzuki Street

Model	Year	OEM Reference Air Cut-Off Valve	Order Number
SV650X/Y/K1/K2	99-02	13480-10F00	010-113
SV650SX/SY/SK1/SK2	99-02	13480-10F00	010-113
GV700GLF/GLF2 Madura	1985	13480-05A10	010-110
VS700GLEFG/GLEFH Intruder	86-87	13480-05A10	010-110
VS700GLEPG/GLEPH Intruder	86-87	13480-05A10	010-110
VS700GLFG/GLFH Intruder	86-87	13480-05A10	010-110
VS700GLPG/GLPH Intruder	86-87	13480-05A10	010-110
VS750GLPJ/GLPK Intruder	88-89	13480-05A10	010-110
VS750GLPL/GLPM Intruder	90-91	13480-05A10	010-110
Boulevard S50K5/K6/K7 (VS800)	05-07	13480-05A10	010-120
Boulevard S50K8/K9 (VS800)	08-09	13480-05A10	010-120
VS800GLN/GLP/GLR Intruder	92-94	13480-05A10	010-120
VS800GLS/GLT/GLV Intrude	95-97	13480-05A10	010-120
VS800GLW/GLX/GLY Intruder	98-00	13480-05A10	010-120
VS800GLK1/GLK2 Intruder	01-02	13480-05A10	010-120
VS800GLK3/GLK4 Intruder	03-04	13480-05A10	010-120
VZ800V/W/X/Y Marauder	97-00	13480-05A10	010-120
VZ800K1/K2/K3/K4 Marauder	01-04	13480-05A10	010-120
VX800L/M/N/P	90-93	13480-05A10	010-120
GV1200GLF/GLF2/GLG Madura	85-86	13480-05A10	010-110
Boulevard S83K5/K6/K7 (VS1400)	05-07	13480-05A10	010-122
Boulevard S83K8/K9 (VS1400)	08-09	13480-05A10	010-122
GV1400GCG/GCH Cavalacade LX	86-87	13480-05A10	010-110
GV1400GDG/GDH/Cavalacade LX	86-87	13480-05A10	010-110
GV1400GDJ/GDK Cavalacade LX	88-89	13480-05A10	010-110
GV1400GTG/GTH Cavalacade	86-87	13480-05A10	010-110
VS1400GLFH Intruder	1987	13480-05A10	010-122
VS1400GLPH/GLPJ Intruder	87-88	13480-05A10	010-122
VS1400GLPL/GLPM/GLPN Intruder	90-92	13480-05A10	010-122
VS1400GLPP/GLPR/GLPS Intruder	93-95	13480-05A10	010-122
VS1400GLPT/GLPV/GLPW	96-98	13480-05A10	010-122
VS1400GLPX/GLPY Intruder	99-00	13480-05A10	010-122
VS1400GLPK1/GLPK2 Intruder	01-02	13480-05A10	010-122
VS1400GLPK1/GLPK2 Intruder	03-04	13480-05A10	010-122

010-120

010-122

KEIHIN & MIKUNI Air Cut-Off Valves Sets

010-108

010-110

010-113

010-111

Suzuki ATV

Model	Year	OEM Reference Air Cut-Off Valve	Order Number
LT-A400FCK3-FCK7 Eiger 4WD	03-07	13480-38F00	010-108
Automatic			
LT-A400FK2/FK3 Eiger 4WD Auto	02-03	13480-38F00	010-108
LT-A400FK4/FK5 Eiger 4WD Auto	04-05	13480-38F00	010-108
LT-A400FK6/FK7 Eiger 4WD Auto	06-07	13480-38F00	010-108
LT-A400FK8/FK9 Eiger 4WD Auto	08-09	13480-38F00	010-108
LT-A400K2/K3/K4 2WD Eiger Auto	02-04	13480-38F00	010-108
LT-F400K2/K3/K4 2WD Eiger	02-04	13480-38F00	010-108
LT-F400K5/K6/K7 2WD Eiger	05-07	13480-38F00	010-108
LT-F400K8 King Quad 2WD STD	2008	13480-38F00	010-108
LT-F400FK2/FK3/FK4 4WD Eiger	02-04	13480-38F00	010-108
LT-F400FK5/FK6/FK7 4WD Eiger	05-07	13480-38F00	010-108
LT-A500FK2/FK3 Vinson 4WD Auto	04-05	13480-38F00	010-108
LT-500FK6/FK7 Vinson 4WD Auto	06-07	13480-38F00	010-108
LT-F500FK3/FK4 Vinson 4WD	03-04	13480-38F00	010-108
Manual			
LT-F500FK5/FK6 Vinson 4WD	05-06	13480-38F00	010-108
Manual			
LT-F500FK7 Vinson 4WD Manual	2007	13480-38F00	010-108

Suzuki Offroad

DR-Z400EY/EK1-EK3 (50 State)	00-03	13480-29F00	010-108
DR-Z400EK4-E7 (49 State only)	04-07	13480-29F00	010-108
DR-Z400Y/K1/K2/K3 (50 State)	00-03	13480-29F00	010-108
DR-Z400K4/K5/K6 (49 State only)	04-06	13480-29F00	010-108

Note: DR-Z models shown use Keihin FCR-H carburetors

Yamaha Street

XT225D/DC-J/JC Serrow	92-97	3LD-1490H-00	010-110
XT225K/KC-W/WC Serrow	98-07	26H-1490H-00	010-110
XVS650A V-Star 650 Classic	98-05	22V-14940-00	010-110
XVS650K/KC-S/SC V-Star Custom	98-04	22V-14940-00	010-110
XVS650T-F V-Star Custom	2005	22V-14940-00	010-110
XVS650TC-F V-Star 650 Custom	2005	22V-14940-00	010-110
XVS650T/TC V-Star Midnight	2005	22V-14940-00	010-110
Custom			
XVS650AT V-Star 650 Silverado	03-05	22V-14940-00	010-110
XV750U Virago 750* (49 state only)	1988	3CF-1490H-00	010-111
* not used on CA models			
XV750W/WC-G/GC Virago 750	89-95	3CF-1490H-00	010-111
XV750H1/HC1-J1/JC1 Virago 750	96-97	3CF-1490H-00	010-111
TDM850D/DC/E/EC	92-93	3LD-1490H-00	010-110
FZS1000N/NC-T/TC FZ-1	01-05	5AP-14940-00	010-113
FZS1000SPR/SPRC FZ-1	2003	5AP-14940-00	010-113
XV1100U/UC-L/LC Virago 1100	88-99	3CF-1490H-00	010-111
XV1100S Virago 1100 Special	96-98	3CF-1490H-00	010-111
XVS1100A V-Star 1100 Classic	00-09	5EL-1490H-00	010-113

Yamaha Street

Model	Year	OEM Reference Air Cut-Off Valve	Order Number
XVS1100L/LC-YCR/YR V-Star 1100	99-09	5EL-1490H-00	010-113
Custom			
XVS1100T/TC-YCB/YB V-Star 1100	05-09	5EL-1490H-00	010-113
Midnight Custom			
XVS1100ATR/ATRC-ATYCL/ATYL	03-09	5EL-1490H-00	010-113
V-Star 1100 Silverado			
VMX12N/NC/V/VC V-Max	85-86	3LD-1490H-00	010-110
VMX12U/UC-J/JC V-Max	88-97	3LD-1490H-00	010-110
VMX12K/KC-W1/W1C V-Max	98-07	26H-1490H-00	010-110
XVZ12DKC2 Venture Royale	1984	3LD-1490 H-00	010-110
XVZ12DL/DLC/DN Venture Royale	84-85	3LD-1490H-00	010-110
XVZ12TK/KC2/L/LC Venture	83-84	3LD-1490H-00	010-110
XVZ13DS/DSC-DE/ DEC	86-93	3LD-1490H-00	010-110
Venture Royale			
XVZ13T/TC/U/UC Venture	87-88	3LD-1490H-00	010-110
XVZ13TFSPC/TFSP-TFMWC	02-07	5AP-14940-00	010-113
Royal Star Midnight Venture			
XVZ13CTMV/CTMV-CTMWC	06-07	5AP-14940-00	010-113
Royal Star Midnight Tour Deluxe			
XVZ13CT Royal Star Tour Deluxe	05-09	5AP-14940-00	010-113
XVZ13CTS Royal Star Tour Deluxe S	08-10	5AP-14940-00	010-113
XVZ13TF Royal Star Venture	99-09	5AP-14940-00	010-113
XVZ13TFS/TFSMC	2000	5AP-14940-00	010-113
Royal Star Venture MM			
XVZ13TFSM/TFSMC/TFSM	2000	5AP-14940-00	010-113
Royal Star Venture MM L.E.			
XVZ13TFS Royal Star Venture S	08-12	5AP-14940-00	010-113

Yamaha Side x Side

YXR450FAVGR Rhino 450 4WD	2006	5EL-1490H-00	010-113
YXR450FAHV Rhino 450 Real Tree	2006	5EL-1490H-00	010-113
YXR450FW Rhino 450	2007	5EL-1490H-00	010-113
YXR450FHW Rhino 450 Hunter	2007	5EL-1490H-00	010-113
YXR450FSEW/FSPX Rhino 450 SE	07-08	5EL-1490H-00	010-113
Special Edition			
YXR450FXGR/FXR Rhino 450	2008	5EL-1490H-00	010-113
YXR450FHX Rhino 450 Hunter	2008	5EL-1490H-00	010-113
YXR450FX/FX-B/FX-C Rhino 450	2008	5EL-1490H-00	010-113
YXR450FYGR/FYR Rhino 450	2009	5EL-1490H-00	010-113
YXR450FHY Rhino 450 Hunter	2009	5EL-1490H-00	010-113

Yamaha ATV

YFM250B Big Bear 250	07-09	5EL-1490H-00	010-113
YFM250X Bear Tracker 250 Realtree	01-02	5EL-1490H-00	010-113
YFM250X Bear Tracker 2WD	99-04	26H-1490H-00	010-110
YFM350A Bruin 350 2WD Auto	2004	5EL-1490H-00	010-113
YFM350B Bruin 350 2WD	05-06	5EL-1490H-00	010-113
YFM350ER Moto-4	87-90	3LD-1490H-00	010-110
YFM350ER Moto-4	92-95	3LD-1490H-00	010-110

KEIHIN & MIKUNI Air Cut-Off Valve Sets

010-118

Yamaha ATV

Model	Year	OEM Reference Air Cut-Off Valve	Order Number
YFM350FA Bruin 350 4WD	04-06	5EL-1490H-00	010-113
YFM350FG Grizzly 350 4WD Hunter	08-12	5EL-1490H-00	010-113
YFM350FGI Grizzly 350 IRS 4WD	07-11	5EL-1490H-00	010-113
YFM350FH Big Bear 4WD	87-97	3LD-1490H-00	010-110
YFM350FH Big Bear 4WD	98-99	26H-1490H-00	010-110
YFM350FX Wolverine 4WD	95-97	3LD-1490H-00	010-110
YFM350FX Wolverine 4WD	98-05	26H-1490H-00	010-110
YFM350G Grizzly 350 2WD	07-11	5EL-1490H-00	010-113
YFM350U Big Bear 2WD	96-97	3LD-1490H-00	010-110
YFM350U Big Bear 2WD	98-99	26H-1490H-00	010-110
YFM350X Warrior	87-97	3LD-1490H-00	010-110
YFM350X Warrior	98-04	26H-1490H-00	010-110
YFM350X Wolverine 350 2WD	06-09	5EL-1490H-00	010-113
YFP350U Terra Pro	1988	3LD-1490H-00	010-110
YFM400A Kodiak 2WD	00-01	5EL-1490H-00	010-113
YFM400FAH Kodiak 4WD Hunter	01-02	5EL-1490H-00	010-113
YFM400FA Kodiak 4WD	00-02	5AP-14940-00	010-113
YFM400FBA Big Bear 400 4WD	07-11	5EL-1490H-00	010-113
YFM400F Big Bear 400 4WD	03-06	5EL-1490H-00	010-113
YFM400FW Kodiak 4WD	93-97	3LD-1490H-00	010-110
YFM400FW Kodiak 4WD	98-99	26H-1490H-00	010-110
YFM400M/MC/N/P Big Bear 2WD	00-02	5EL-1490H-00	010-113
YFM600FW Grizzly	98-00	4WV-14940-00	010-118
YFM600FH Grizzly Realtree	2000	4WV-14940-00	010-118
YFM600F Grizzly Realtree Hunter	2001	4WV-14940-00	010-118
YFM660R Raptor	01-05	5EL-1490H-00	010-113

Yamaha Dual Sport & Offroad

TT225L/LC	1999	26H-1490H-00	010-110
TT-R225L/LC-S/SC	99-04	26H-1490H-00	010-110
XT225D/DC-J/JC Serow	92-97	3LD-1490H-00	010-110
XT225K/KC-JW/WC Serow	98-07	26H-1490H-00	010-110

007-798

Mikuni Diaphragm Assembly

N148.045 Diaphragm Assembly fits the following models: Yamaha **TTR225** (99-04), **Wolverine 350 4x4** (96-05), **XT225 Serow** (92-07) **Order No.** 007-798

Sudco Air Cut-Off Valve Set

Three piece set includes **GENUINE** Keihin parts; diaphragm, spring, and o-ring. Fits Keihin FCR-MX, Kawasaki ZX900 and Yamaha Offroad with FCR-MX; WR250/400/426/450. ***Made in Japan.***

Order No. 018-900

Kawasaki OEM Keihin with CVK Carburetor

Qt	OEM Reference	Description
1	43028-1085	Diaphragm
1	92145-1149	Spring
1	92093-1046	"U-Ring" O-ring

Applications	Year
ZX900C1/C2 Ninja ZX-9R	98-99
ZX900E1/E2 Ninja ZX-9R	00-01
ZX900F1/F2 Ninja ZX-9R	02-03

Keihin FCR-MX37, 39, 41mm with Air Cut-Off

Qt	OEM Reference	Description
1	1201-858-2700	Diaphragm
1	1290-A19-2000	Spring
1	W9353-36000	"U-Ring" O-ring

Yamaha OEM Keihin with FCR-MX Carburetor

Qt	OEM Reference	Description
1	5GS-14940-00-00	Diaphragm
1	5GS-14933-00-00	Spring
1	3TJ-14536-40-00	"U-Ring" O-ring

Applications	Year
ATV	
YFZ450S/T/V/W/W-B	04-07
YFZ450LES Limited Edition	2004
YFZ450SET/SPV/SEW/SPX	05-08
Special Edition	
YFZ450BBV/BBW	06-07
Bill Ballance Edition	
YFZ450SE2W/SP2X	07-08
Special Edition II	
YFZ450XL/XGY/YL/YW	08-09
YFZ450YL/YW	2009
YFZ450RYW/RYL	2009
Offroad	
WR250FN-FY	01-09
WR250FA/FB	11-12
WR400FM	2000
WR426FN/FP	01-02
WR450FR-FY/FA	03-11

Fuel Injection Controller & Air/Fuel Ratio Monitor

Dynatek (F.I.) Fuel Injection Controller

The Dyna Fuel Injection controller is a plug-in module that offers 3 user selectable base fuel curves. Designed to improve engine operation and can be modified to suit a wide variety of modifications. These adjustments are made via 3 potentiometers that adjust the fuel curve in the proper ranges for the application. Fuel mixture can be enriched or leaned as required. The Dyna F.I. Controller use the factory connectors for easy installation and there is no PC required for tuning or adjusting the fuel curves. There are no modifications to the stock ECU and removing the Dyna F.I. Controller returns the vehicle to the factory settings. Available for the following models:

Metric Cruiser

Honda

Model	Year	Dynatek No.	Order No.
VTX1800 (all C, N & Retro models)	02-08	DFCM-1	618-991

Kawasaki

VN1500 Vulcan Classic, Vulcan Drifter	99-08	DFCM-2	618-992
VN1500 Vulcan Mean Streak & Nomad	99-08	DFCM-2	618-992
VN1600 Vulcan 1600 Mean Streak	04-08	DFCM-3	618-993
VN2000 Vulcan 2000	04-08	DFCM-4	618-994

Suzuki

VL800 Boulevard C50	05-08	DFCM-5	618-995
VZ800 Boulevard M50	05-08	DFCM-5	618-995
VL1500 Boulevard C90	05-09	DFCM-6	618-996
VZ1600K4 Marauder	03-08	DFCM-3	618-993

Yamaha

XV1700 Road Star Warrior	02-09	DFCM-7	618-997

ATV

Bombardier

Model	Year	Dynatek No.	Order No.
Outlander 800	06-09	DFCA-5	618-895

Honda

TRX680 Rincon	06-09	DFCA-1	618-891

Polaris

500 EFI	2006	DFCA-6	618-896
700 Twin EFI	2004	DFCA-7	618-897
700 Twin EFI	05-08	DFCA-8	618-898
800 Twin EFI	05-08	DFCA-9	618-899

Suzuki

LT-R450	06-09	DFCA-2	618-892
LT700 King Quad	05-07	DFCA-3	618-893

Yamaha

YFM700 Raptor	06-09	DFCA-4	618-894

Pilot, Fuel & Idle Screws & Carb Caps

Sudco Pilot Screw Kit for Suzuki

GENUINE replacement parts. Four piece kit includes pilot screw, spring, washer and o-ring. Individual parts are also available.

Order No. 007-947

Individual Parts (each)	Order No.
Pilot Screw	007-632
Spring	007-631
Washer	002-856
O-Ring	002-858

Model	Year
DR250 Offroad with TM33 Pumper Carb	90-93
DR350 Offroad with TM33 Pumper Carb	90-99
GSX-R1100W	93-98
GS1000/GS1100/GS1150	80-85

021-921

021-922

Sudco Blaster/Banshee Carburetor Caps

Sold as kits for Yamaha YFS200 Blaster, and YFZ350 Banshee.

YFZ350 Banshee Kit **Order No. 021-921**
Includes 2 caps, 2 cable adjuster screws and 2 locknuts.

YFZ200 Blaster Kit **Order No. 021-922**
Includes 1 cap, 1 cable adjuster screw and 1 locknut.

Individual Replacement Parts

Description	Order No.
Cable Adjuster Screw with Locknut	021-273
Top Cap only VM34/27 (each)	002-066

Motion Pro Yamaha Banshee/Blaster Idle Kit

Kit includes drill bit, taper thread tap, 2 idle adjuster screws with lock nuts and installation instructions. Install a standard Mikuni idle adjuster screw into Yamaha YFS200 Blaster and YFZ350 Banshee carburetors.

Order No. 021-920

Individual Parts (each)	Order No.
Idle Adjuster Screw only	002-184
Idle Adjuster Screw Locknut only	002-065

Sudco Keihin FCR-MX Pilot Screw

Stock replacement pilot screw for Keihin FCR-MX carburetors. Sold each

Order No. 021-729

Individual Parts (each)	Order No.
Keihin FCR-MX Pilot Screw Spring	021-041
Keihin FCR-MX Pilot Screw Washer	021-045
Keihin FCR-MX Pilot Screw O-Ring	021-043

Tokyomods FCR-MX Fuel Mixture Screw

Easily adjust the fuel mixture on your Keihin FCR carburetor. Dual O-rings to keep it in place. Machined from 6061 aluminum.

Application	Color	Order No.
Keihin FCR-MX	Red	024-200R
Keihin FCR-MX	Blue	024-200B
Keihin FCR-MX	Black	024-200K
Keihin FCR-MX	Mag	024-200M

Sudco Banshee Carburetor Cable Kits

Fits stock thumb throttle. Sold as a kit for Yamaha YFZ350 Banshee. Two kits available.

YFZ350 Banshee Carburetor Cable Kit without Idle Screws

Order No. 021-923

Includes 2 caps, 2 cable adjuster screws, 2 locknuts and throttle cable for stock thumb throttle.

YFZ350 Banshee Carburetor Cable Kit with Idle Screws

Order No. 021-924

Includes 2 caps, 2 cable adjuster screws, 4 locknuts, throttle cable for stock thumb throttle and idle screws.

Individual Replacement Parts

Description	Order No.
Cable Adjuster Screw with Locknut	021-273
Idle Adjuster Screw only	002-184
Idle Adjuster Screw Locknut only	002-065
Top Cap only VM34/27 (each)	002-066
Throttle Cable for stock Thumb Throttle	021-278

Zip-Ty Air Mixture Screw

Zip-Ty Air Mixture Screws allow you to handily adjust your 2-stroke's off idle acceleration with just a turn off your fingers-no tools. The Air mixture Screw will fit all Keihin and Mikuni 2-stroke carburetors. It's lightweight billet aluminum, hand anodized for long lasting service, and laser etching for adjustment accuracy.

Sudco Carburetor Rebuild Kits

Each kit contains genuine Keihin and Mikuni parts to rebuild one carburetor body. ***Made in Japan.*** **Note: 018-851 and 018-852** rebuild kits include parts for 4 carb bodies.

H - Horizontal Carburetor **D** - Downdraft Carburetor

Keihin

Application	Order No.
26-33 CR Special **(4 carb bodies)**	018-851
35-39 CR Special **(4 carb bodies)**	018-852
28-33 FCR-**D**	018-865
28-33 FCR-**H**	018-865
35-39 FCR-**D**	018-866
41 FCR-**D**	018-867
35-39 FCR-**H**	018-870
41 FCR-**H**	018-871

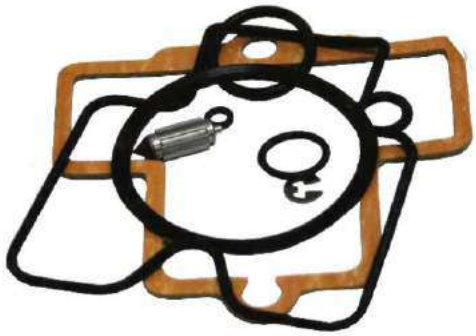

018-866

Mikuni

Application	Order No.
BSR33	025-663
BSR33/ BSR42	025-665
HS40 (TM40-6)	002-985
HSR42/45	002-989
HSR48	002-982
TM33-6012 Pumper	025-661
TM36-68	007-940
VM26-606 with side choke	025-660
Yamaha OEM BSR44 for YXR660 Rhino	025-662
Yamaha TTR225, XT225, Wolverine ATV	025-664

002-985

Sudco Watercraft Carburetor Rebuild Kits

Each kit contains genuine Keihin and Mikuni parts to rebuild one carburetor body. ***Made in Japan.*** See Watercraft section for additional details and replacement parts.

Keihin

Application	Keihin No.	Order No.
CDK28mm	9000-981-0100	025-625
CDKII 38, 40, 42	1000-A47-0100	025-627

Mikuni

Application	Mikuni No.	Order No.
BN34, BN38 & BN44 Round Pump Carb	MK-BN38/44	025-650
BN38, BN44 Square Pump Carb	MK-BN38/44 SPR	025-651
BN38I, BN40I Square Pump Carb	MK-BN38/44 SPR	025-651
BN46 Square Pump Carb	MK-BN38/44 SPR	025-651
BN44I Square Pump Carb, Yamaha	MK-BN44I	025-653
BN46I, Sea Doo	MK-BN46I	025-654

025-651

025-653

Street Carburetor Repair Kits

025-610

025-950

025-600

025-426

Vintage Street Carburetor Repair Kits

Each kit contains necessary parts to rebuild one OEM carburetor body.
Made in Japan. **Note- Check all parts before installation.**

Honda

Model	Carburetor	Year	Order No.
CB72 Hawk 250	PW22	61-66	025-610
CL72 Scrambler 250		62-65	025-611
CB77 Super Hawk 305	PW26	61-68	025-610
CL77 Scrambler 305		65-68	025-611
CB350, CB350 K2-K6			025-950
CB350F Super Sport	20mm	72-74	025-609
CB360			025-952
CB400F Super Sport		75-77	025-612
CB400/T			025-954
CB450/CL450			025-953
CB500		1972	025-955
CB500F			025-956
CB750K/K1			025-957
CB750K0/K1/K2	28mm	69-72	025-613
CB750K2			025-958
CB750F			025-959
CBX1000		79-80	025-960
CBX1000		81-82	025-961
SL350,K1/K2			025-951

Kawasaki

S1A/S1B/S1C-250	VM22SC	73-75	025-680
KH250A5	VM22SC	1976	025-680
S2/S2A-350	VM24SC	72-73	025-681
S3/S3A-400	VM26SC	74-75	025-682
KH400	VM26SC	76-78	025-682
H1/A/C-500 Mach III	VM28SC	69-72	025-603
H1B/D/E/F-500	VM28SC	73-75	025-601
H2/A-750 Mach IV	VM30SS	72-73	025-602
Z1/A/B-900	VM28SS	73-75	025-600
KZ1000A1/A2	VM26SS	77-78	025-604
KZ1000A3/A3A MKII	VM28SS	1979	025-605
KZ1000A4 MKII	VM28SS	1980	025-606
KZ1000B1/B2 LTD	VM26SS	77-78	025-604
KZ1000B3 LTD	VM26SS	1979	025-605
KZ1000B4 LTD	VM28SS	1980	025-606
KZ1000C1/C1A Police	VM26SS	1978	025-604
KZ1000C2 Police	VM26SS	1979	025-606
KZ1000C3/C4 Police	VM28SS	80-81	025-606
KZ1000D1 Z1R	VM28SS	1978	025-604
KZ1000D3 Z1R	VM28SS	1980	025-606
KZ1000E1/E2 Shaft ST	VM28SS	79-80	025-605
KZ1000J1/J2	BS34	81-82	025-614
KZ1000K1/K2 LTD	BS34	81-82	025-614
KZ1000M1/M2 CSR	BS34	81-82	025-614
KZ1000P1-P21 Police	BS34	82-02	025-614
KZ1000R1/R2 Replica	BS34	82-83	025-614

Suzuki

Model	Carburetor	Year	Order No.
GT380L/M/A/B Sebring	VM24SC	74-77	025-425
GT750L/M/A/B Lemans	BS	74-77	025-426

Yamaha

RD350/A/B	VM28SC	73-75	025-623
RD400C/D/E	VM28SC	76-78	025-624

025-001

025-607

Shindy Products ATV Carburetor Repair Kits

Complete kits to rebuild one **OEM carburetor**. Each kit contains necessary gaskets, o-rings, needle valve or needle valve set and jets. Carburetor Repair Kits for YFM660 Raptor and Kawasaki KVF650 kits contain parts for two carburetors. ***Made in Japan.***

Honda

Model	Carburetor	Year	Order No.
ATC70	PB13	78-85	025-001
ATC90	PB15	70-71	025-003
ATC90K1/K2/K3	PB15	72-75	025-003
ATC90	PB15	76-78	025-003
TRX90 Fourtrax 90		93-98	025-084
ATC110	PB18	79-83	025-005
ATC110	PB18	84-85	025-061
ATC125M	PB20	84-85	025-062
TRX125 Fourtrax	PB	85-86	025-050
TRX125 Fourtrax	PB18	87-88	025-063
ATC185	PD	1980	025-009
ATC185S	PD	81-83	025-009
ATC200	PD	81-82	025-008
ATC200	PD	1983	025-009
ATC200E Big Red	PD22	82-83	025-064
ATC200ES Big Red	PD22	1984	025-064
ATC200M	PD22	84-85	025-064
ATC200S	PD22	84-86	025-065
ATC200X	PD24	83-85	025-012
ATC200X	PD	86-87	025-014
TRX200 Fourtrax 200	PD20	90-91	025-066
TRX200D Fourtrax 200 Type II		1991	025-066
TRX200D Fourtrax 200 Type II	PD	92-93	025-067
TRX200D Fourtrax 200 Type II		94-97	025-068
TRX200SX Fourtrax	PD22	87-88	025-069
ATC250R	PE27	81-82	025-017
ATC250R	PE30	83-84	025-018
ATC250R	PE37	1985	025-019
ATC250ES Big Red	QA27	85-87	025-029
ATC250SX	QA27	1985	025-070
TRX250 Fourtrax 250	QA27	1985	025-071
TRX250 Fourtrax 250	QA27	86-87	025-072
TRX250EX Sportrax 250EX	PD	01-04	025-085
TRX250R Fourtrax 250R	PJ34	86-87	025-060
TRX250R Fourtrax 250R	PJ34	1988	025-073
TRX250X	QB29	1988	025-075
TRX300 Fourtrax 300	VE29	1991	025-074
TRX300 Fourtrax 300	VE32	1992	025-076
TRX300 Fourtrax 300	VE32	93-95	025-078
TRX300EX Fourtrax 300EX	QB	93-98	025-081
TRX300FW Fourtrax 300 4x4	VE33	1988	025-075
TRX300FW Fourtrax 300 4x4	VE29	91-92	025-076
TRX300FW Fourtrax 300 4x4	VE32	93-95	025-078
ATC350X	QA31	1985	025-035
TRX350 Fourtrax 4x4	QA31	86-87	025-079

Honda

Model	Carburetor	Year	Order No.
TRX350FE Fourtrax Rancher 4x4 ES	VE	00-03	025-082
TRX350FM Fourtrax Rancher 4x4	VE	00-03	025-082
TRX350TE Fourtrax Rancher ES	VE	00-03	025-082
TRX350TM Fourtrax Rancher	VE	00-03	025-082
TRX350D Fourtrax Foreman 4x4		87-89	025-079
TRX400EX Fourtrax 400EX	QB	99-00	025-087
TRX400EX Sportrax 400EX		01-04	025-087
TRX400FA Fourtrax Rancher AT		04-05	025-088
TRX400FGA Fourtrax Rancher AT GPscape		04-05	025-088
TRX400FW Fourtrax Foreman	VE	95-00	025-080
TRX450ES Fourtrax Foreman ES	VE	98-01	025-083
TRX450FE Fourtrax Foreman ES	VE	02-03	025-083
TRX450FM Fourtrax Foreman S	VE	02-03	025-083
TRX450S Fourtrax Foreman S	VE	98-01	025-083
TRX500FA Fourtrax Rubicon	VE	01-04	025-086
TRX650FA Fourtrax Rincon		03-05	025-089
TRX650FGA Fourtrax Rincon GPscape		03-05	025-089

Kawasaki

KLF220A1-A11 Bayou 220	VM24SS	88-98	025-607
KLF250A1/A2/A3/A6F/A7F Bayou	VM24SS	03-07	025-675
KSF250A!-A11 Mojave 250	CVK34	87-97	025-618
KLF300A1/A2 Bayou 300	CVK32	86-87	025-615
KLF300B2-B8 Bayou 300	CVK32	89-95	025-616
KLF300C1-C7 Bayou 300 4x4	CVK32	89-95	025-617
KVF300A1-A4 Prairie	CVK32	99-02	025-621
KVF360A1/A2/A3 Prairie 360 4x4	CVK34	03-05	025-676
KVF360A6F/A7F Prairie 360 4x4	CVK34	06-07	025-676
KVF360B1/B2/B3 Prairie 360	CVK34	03-05	025-676
KVF360B6F/B7F Prairie 360	CVK34	06-07	025-676
KVF360C1 Prairie 360 4x4	CVK34	2003	025-676
KVF360C2/C3 Prairie 360 4x4 Hardwoods Green HD	CVK34	04-05	025-676
KVF360C6F/C7F Prairie 360 4x4 Hardwoods Green HD	CVK34	06-07	025-676
KLF400B1/B2/B3 Bayou 400 4x4	CVK32	93-95	025-619
KLF400B4-B7 Bayou 400 4x4	CVK32	96-99	025-620
KVF400D1-D4 Prairie 400	CVK34	99-02	025-622
KVF650 (for 2 carbs)		02-07	025-677
KVF650A1/A2 Prairie 650 4x4	CVKR-D32	02-03	025-677
KVF650B1/B2 Prairie 650 4x4	CVKR-D32	02-03	025-677
KVF650D1/D6F/D7F **(for 2 carbs)** Brute Force 4x4	CVKR-D32	02-03	025-677
KVF650E Brute Force 650 4x4 Hardwoods Green HD	CVKR-D	05-07	025-677

ATV Carburetor Repair Kits

025-702

025-416

Polaris

Model	Carburetor	Year	Order No.
Trail Blazer		90-95	025-701
Trail Blazer 2x4		89-93	025-701
Trail Boss 4x4		89-93	025-701
Trail Boss		89-99	025-701
Xplorer 300		96-99	025-702
Xpress 300		96-99	025-702
4x4 300		94-95	025-702
2x4 300		94-95	025-702
Trail Boss 4x4 350L	VM34SS	92-93	025-703
Trail Boss 2x4 350L	VM34SS	92-93	025-703
Sportsman 4x4		1993	025-703
Xplorer 400 4x4		1995	025-704
Sport 400		94-95	025-704
4x4 400L		1994	025-704
2x4 400L		1994	025-704
Sportsman 4x4		94-95	025-704
Trail Blazer		96-00	025-705
Xplorer 4x4		2000	025-705
Scrambler 400 2x4		00-01	025-706
Scrambler 400 4x4		98-00	025-706
Scrambler 400L		1997	025-706
Xplorer 400		97-02	025-707
Scrambler 500	BSR33	2000	025-708
Scrambler 500 2x4	BSR33	01-02	025-708
Scrambler 500 4x4	BSR33	01-02	025-708
Scrambler 500 4x4 Freedom	BSR33	2002	025-708
Sportsman 500	BSR33	2002	025-708

Suzuki

Model	Carburetor	Year	Order No.
LT80H-W Quadrunner	VM16SH	87-98	025-416
ALT125D/E/F/G		83-86	025-407
LT125D/E/F/G/H		83-87	025-407
LT-F160M/N/P/R/S/T/V/W	VM20SS	91-98	025-414
LTF230G/H		86-87	025-410
LT230GEF/GEG Quadrunner		85-86	025-410
LT230EK-EP Quadrunner	VM24SS	89-93	025-411
LT230SF-SJ Quadrunner		85-88	025-402
LT-F250L-T Quadrunner	BST31SS	90-96	025-413
LT-F250FX-FK2 Quadrunner		99-02	025-417
LT250RF/RG Quadracer	TM34SS	85-86	025-405
LT-F250J/K Quadrunner	BST31SS	88-89	025-412
LT-4WDH/J/K		87-89	025-412
LT4WDL-WDT		90-96	025-413
LT-F4WDXM-WDXW King Quad	BST31SS	91-98	025-415
LT-A400FK2-FK7 Eiger 4WD Auto	CVK32	02-07	025-419
LT-F400K2/K3/K4 Eiger 2WD Auto	CVK32	02-04	025-419
LT-F400FK2-FK7 Eiger 4WD	CVK32	02-07	025-419

Suzuki

Model	Carburetor	Year	Order No.
LT-F400K2-K7 Eiger 2WD	CVK32	02-04	025-419
LT-F400K2/K3/K4 Eiger 2WD	CVK32	02-04	025-419
LT-F400K7 Eiger 2WD	CVK32	2007	025-419
LTF500FW-FK2 Quadrunner	BSR	98-02	025-418

025-211

Yamaha

YFM125		04-06	025-227
YFM80D/E/F Badger		92-01	025-218
YFM80 Raptor		02-04	025-218
YFM200DXS-DXW Moto-4		86-89	025-219
YFS200U-P Blaster	VM26	88-02	025-210
YFB250D/E/F/G/H Timberwolf		92-95	025-215
YFB250UH/UJ/UK Timberwolf		96-98	025-215
YFB250FWTimberwolf		94-98	025-215
YFM250W/A/B Moto-4		89-91	025-211
YFM250X Beartracker		99-04	025-224
YFM350F/FW Big Bear		89-92	025-213
YFM350ER Moto-4		89-93	025-213
YFM350XU-XR Warrior	36	88-02	025-216
YFZ350T-P Banshee	VM26	88-02	025-217
YFM400FWE/FWF Kodiak		93-94	025-213
YFM400FWG Kodiak		1995	025-213
YFM400F Kodiak 4WD		94-98	025-220
YFM400F Kodiak 4WD	BSR33	00-04	025-221
YFM450 Kodiak	BSR33	03-04	025-225
YFM600FW Grizzly		98-01	025-222
YFM660FP/FPS/FR/FS/FAT Grizzly	BSR42	02-05	025-226
YFM660 Grizzly	BSR42	02-05	025-226
YFM660R Raptor **(for 2 carbs)**	BSR33	01-04	025-223

020-112

007-951

020-120

Sudco Offroad Carb Repair Kits

Sudco Carb Repair Kits include GENUINE replacement parts for one **OEM carburetor.** These kits do not include jets, jet needles or needle jets. ***Made in Japan.***

Honda

Model	Carburetor	Year	Order No.
CR85R	PWK28	05-08	020-112
CR85RB	PWK28	05-08	020-112
CR125R	PJ34	85-89	020-115
CR125R	PJ34 & 36	90-99	020-313
CR250R	PJ36	1985	020-115
CR250R	PJ38	86-89	020-115
CR250R	PJ38	90-96	020-314
CR250R	PJ38	97-98	———
CR250R	PWK38	99-00	———
CRF450R	FCR-MX40	02-03	020-315
CR500R	PJ38	85-89	020-115
CR500R	PJ38	90-01	020-314

Kawasaki

KX85A1/A2/A3/A4	PWK28	01-04	020-112
KX85A5/A6F/A7F/A8F/A9F	PWK28	05-09	020-112
KX85A9FA Monster Energy	PWK28	2009	020-112
KX85AAF/ABF/ACF	PWK28	10-12	020-112
KX100D1/D2/D3/D4	PWK28	01-04	020-112
KX100D5/D6F/D7F/D8F/D9F	PWK28	05-09	020-112
KX100D9FA Monster Energy	PWK28	2009	020-112
KX100DBF/DCF/DDF	PWK28	11-13	020-112
KX125F1/G1/H1/H2	PWK35	88-91	020-110
KX125J1/J2/K1/K2	PWK36	92-95	020-110
KX125K3/K4	PWK35	96-97	020-110
KDX200E1-E6	PWK35	89-94	020-110
KDX200H1-H11	PWK35	95-05	020-110
KDX200H6F	PWK35	2006	020-110
KDX220A4-A12	PWK33	97-05	020-110
KDX250D1/D2/D3/D4	PWK38	91-94	020-110
KX250F1	PWK39	1988	020-110
KX250G1/H1/H2/J1/J2	PWK38	89-93	020-110
KX250K1/K2/K3/K4	PWK38	94-97	020-110
KX250N1/N2/T6F/T7F (KX250F)	FCR37MX	04-07	020-317
KXF250A2 Tecate 2 ATV	PWK35	1988	020-110
KX450T6F/T7F (KX450F)	FCR40MX	06-07	020-317
KX500D1/E1-E16	PWK39	88-04	020-110

Keihin

Model	Carburetor	Year	Order No.
FCR-MX37, 39 & 41mm			020-319
FCR-MX37, 39 & 41mm w/Air Cut Valve & Hot Start			020-320
FCR-MX37, 39 & 41mm w/Air Cut Valve & Hot Start/TPS			020-321
PJ34-38mm			020-115
PWK28mm			020-112
PWK33-41mm			020-110
PWK39mm Snowmobile			020-111
PWM38mm			020-120

KTM

85 SX	PWK28	03-12	020-112
105 SX	PWK28	04-12	020-112

Mikuni

VM26-606 spigot with side choke	VM26		025-660
TM33-8012 Pumper	TM33		025-661
TMS38 with 3.5 needle valve	TMS38		007-950
TMX35-1 with 3.5 needle valve			007-950
TMX38-18 & TMX38-27 w/3.5 N/V			007-950
TMS38 w/1.8 N/V	TMS38		007-951
TMX35-1, TMX38-18 & TMX38-27w/1.8 N/V			007-951
TMX35-1, TMX38-18 & TMX38-27w/1.8 N/V			007-951

Suzuki

RM100K3	PWK28	2003	020-112
RM125J/K/L/M/N/P	TMS36	88-93	007-950
RM125R/S/T/V	PJ34 or 36	94-97	020-110
DR200G/H/J Offroad	TM26	86-88	025-661
DR250L/M/N/P Offroad	TM33	90-93	025-661
DR-Z250K1-K7 Offroad (49 state)	TM28SS	01-07	025-661
RM250J/K/L/M/N	TMS38	88-92	007-950
RM250P/R/S/T	PJ38	93-96	020-115
RM250V	PWK38	1997	020-110
RMX250K/L/M/N Offroad	TMS38	89-92	007-950
RMX250P/R/S/T/V/W Offroad	PJ38	93-98	020-115
RM-Z250K4/K5	FCR37MX	04-05	020-317
DR350L/M/N/P/R/S/T Offroad	TM33	90-96	025-661
DR350V/W/X Offroad (49 state)	TM33	97-99	025-661
RM-Z450K5/K6/K7	FCR40MX	05-07	020-317

Yamaha

Model	Carburetor	Year	Order No.
YZ85P/R/S/T/W	PWK28	02-08	020-112
YZ125W/A/B/D/E1/F1	TMS36	89-94	007-950
YZ250FN/FP	FCR37MX	01-02	020-323
YZ250W/A/B/D/E1/F1	TMS38	89-94	007-950
YZ250G1	PWK38	1995	020-110
YZ250H1/J1/K1	PWM38	96-98	020-120
WR400FK/FLOffroad	FCR39-H	98-99	020-324
WR400FM Offroad	FCR39MX	2000	020-323
YZ400FK/FL	FCR39-H	98-99	020-324
WR426FN/FP	FCR39MX	01-02	020-323
YZ426FN/FP	FCR39MX	01-02	020-323
WR450FR/FS	FCR39MX	03-04	020-325
YZ450FR/FS	FCR39MX	03-04	020-325

Offroad Carburetor Repair Kits

025-825

YXR660 Rhino Carburetor Rebuild Kit

Kit contains GENUINE Mikuni parts, all the necessary parts, diaphragms and gaskets to rebuild the Yamaha Rhino BSR carburetor. Sold as a kit.

Made in Japan. **Order No. 025-662**

Yamaha Side x Side

Model	Carburetor	Year
YXR660FAS/FAT/FAV Rhino 660	BSR42	04-06
YXR660FAHS/FAHT Rhino 660	BSR42	04-05
Hardwoods Camo Hunter Edition		
YXR660FAHV Rhino 660	BSR42	2006
4WD Hunter		
YXR660FASEV Rhino 660 4WD	BSR42	2006
Special Edition		
YXR660FAVGR Rhino 660 4WD	BSR42	2006
YXR660FHW	BSR42	2007
YXR660FDUW	BSR42	2007
YXR660FSEW	BSR42	2007
YXR660FW	BSR42	2007

Shindy Products Offroad Carburetor Repair Kits

Complete kits to rebuild one **OEM carburetor**. Each kit contains necessary gaskets, o-rings, needle valve or needle valve set and jets. ***Made in Japan.***

Honda

Model	Carburetor	Year	Order No.
CR80R	PE28	96-02	025-801
CR85R	PE28	03-04	025-801
CR125R	TMX36	00-01	025-802
CR125R	TMX38	02-03	025-803
CR125R		04-07	025-787
CR250R	PWK38	99-00	025-804
CR250R	TMX38S	01-03	025-805
CR250R		04-07	025-788
CRF50F		04-05	025-789
CRF50F		06-12	025-794
CRF150F		03-05	025-790
CRF150F		06-12	025-795
CRF230F		03-05	025-791
CRF230F		06-12	025-796
CRF230L		08-09	025-800
CRF250	FCR-MX	2004	025-806
CRF250R	FCR-MX	2005	025-807
CRF250R	FCR-MX	06-08	025-808
CRF450R	FCR-MX	02-04	025-809
CRF450R	FCR-MX	05-06	025-810
CRF450R	FCR-MX	07-08	025-811
XR250R		86-95	025-797
XR250R		96-04	025-798
XR400R		98-04	025-792
XR650L		93-09	025-799
XR650R		00-06	025-793

Shindy Products Offroad Carburetor Repair Kits

Kawasaki

KLX110		06-09	025-867
KLX110		02-05	025-867
KLR650		87-07	025-869
KLR650		08-11	025-870
KX85A1/A2/A3/A4/A5	PWK28	01-05	025-861
KX125L3	TMX36	2001	025-862
KX125L4	TMX38	2002	025-862
KX125M1/M2/M3	TMX38	03-05	025-863
KX250F	FCR-MX	04-08	025-865
KX250L2/L3/L4	PWK38S	00-02	025-864
KX250M1/M2	PWK38S	03-04	025-864
KX450F	FCR-MX	06-08	025-866

Suzuki

DRZ400S		00-09	025-846
DR650SE		96-09	025-847
DR350SE		94-99	025-848
RM85K2/K3/K4/K5/K6	PE28	02-06	025-841
RM125K1/K2/K3/K4/K5	TMX38S	01-05	025-842
RM250K1/K2/K3/K4/K5/K6	PWK38S	01-06	025-843
RMZ250	FCR-MX	05-06	025-865
RMZ250	FCR-MX	07-09	025-844
RMZ450	FCR-MX	05-07	025-845

Yamaha

PW50		03-06	025-881
PW80		91-06	025-885
TT-R50		06-09	025-882
TT-R90		00-05	025-886
TT-R90E		06-07	025-888
TT-R125		00-05	025-887
TT-R125/L		06-07	025-883
TT-R225		00-04	025-889
TT-R230		05-09	025-884
TW200		87-00	025-892
XT225		92-07	025-890
XT250		08-10	025-891
YZ80J1/K1/L/M1/N1	VM26	97-01	025-821
YZ85P/R/S	PWK28	02-04	025-822
YZ125		05-08	025-880
YZ125L/M	TMX	99-00	025-823
YZ125P/R/S1	TMX38S	02-04	025-824
YZ250F	FCR-MX	01-02	025-827
YZ250F	FCR-MX	03-06	025-828
YZ250F	FCR-MX	07-08	025-829
YZ250M1/N	PWK38	00-01	025-825
YZ250P/R/S1	PWK38S	02-04	025-826
YZ426F	FCR-MX	00-02	025-830
YZ450F	FCR-MX	03-04	025-831
YZ450F	FCR-MX	05-08	025-832

002-114

002-605

007-727

Sudco Mikuni & Keihin Carburetor Float & Pin

Genuine Mikuni & Keihin carburetor float and pin.
Sold each. ***Made in Japan.***
Parts are sold separately, order by SUDCO part number.

Honda Offroad

Model	Year	Float	Float Pin
CR80R	84-02	018-397	018-670
CR80RB	96-02	018-397	018-670
CR85R	03-06	018-397	018-670
CR85RB	03-06	018-397	018-670
CR125R	84-99	018-110	018-670
CRF150R/RB	07-09	018-202	018-670
CRF150R/RB	2012	018-202	018-670
CR250R	84-00	018-110	018-670
CRF250R	04-05	018-202	018-670
CRF250X	04-09	018-202	018-670
CRF450R	02-06	018-202	018-670
CRF450X	05-09	018-202	018-670
CRF450X	2012	018-202	018-670
CR500R	84-01	018-110	018-670

Kawasaki Street

A7-350 Avenger 2-stroke rotary valve	66-71	002-114	002-605
A7SS-350 Avenger SS	70-71	002-114	002-605
H1D/E/F-500 2-stroke triple	73-75	002-114	002-605
KH500A8 2-stroke triple	1976	002-114	002-605
H2/A/B/C-750 2-stroke triple	72-75	002-114	002-605
KZ650H2/H3 CSR	82-83	007-727	002-605
KZ700A1	1984	007-727	002-605
H2/A/B/C-750 2-stroke triple	72-75	002-114	002-605
KZ750K1/K2 LTD (2-cylinder)	83-84	007-727	002-605
KZ750L3	1983	007-727	002-605
KZ750M1 CSR (2-cylinder)	1982	007-727	002-605
KZ750R1 GPz	1982	007-727	002-605
ZX750A1/A2/A3 GPz	83-85	007-727	002-605
ZX750K1/K2 Ninja ZX-7R	92-93	021-051	018-670
ZX750M1/M2 Ninja ZX-7R	94-95	021-051	018-670
KZ1000J1/J2/J3	81-83	007-727	002-605
KZ1000K1/K2 LTD	81-82	007-727	002-605
KZ1000M1/M2 CSR	81-82	007-727	002-605
KZ1000P1-P21 Police	82-02	007-727	002-605
KZ1000P24 Police	2005	007-727	002-605
KZ1000R1/R2 Replica	82-83	007-727	002-605
KZ1100A1/A2/A3 Shaft	81-83	007-727	002-605
KZ1100D1/D2 Spectre	82-83	007-727	002-605
KZ1100L1 LTD	1983	007-727	002-605
ZN1100B1/B2 LTD Shaft	84-85	007-727	002-605

Kawasaki Dual Sport & Offroad

Model	Year	Float	Float Pin
KX80L1/L2	88-89	018-397	018-670
KX80N1/N2	88-89	018-397	018-670
KX85A1/A2/A3/A4/A5/A6F/A7F/A8F/A9F	01-09	018-397	018-670
KX85AAF/ABF/ACF	10-12	018-397	018-670
KX100D1/D2/D3/D4/D5/D6F/D7F/D8F/D9F	01-09	018-397	018-670
KX100DBF/DCF/DDF	11-13	018-397	018-670
KX125F1/G1/H1/H2/J1/J2	88-93	018-110	018-670
KX125K1/K2	94-95	018-110	018-670
KDX200C3	1988	018-110	018-670
KDX200E1-E11	89-05	018-110	018-670
KDX200H6F	2006	018-110	018-670
KDX220A4-A12	97-05	018-110	018-670
F11/A/B-250	73-75	002-114	002-605
F21M 238 Greenstreak		002-114	002-605
F4-250	69-70	002-114	002-605
KDX250D1/D2/D3/D4	91-95	018-110	018-670
KE250B1/B2/B3	77-79	002-114	002-605
KX250F1/G1/H1/H2/K1/K2	88-95	018-110	018-670
KX250N1/N2/N3 (KX250F)	04-06	018-202	018-670
KX250T6F/T7F/T8F KX250F	07-08	018-202	018-670
KX250W9F/ XAFB KX250F	09-10	018-202	018-670
KX450D6F/D7F/D8F	06-08	018-202	018-670
KX500D1/E1-E7	88-95	018-110	018-670

Keihin

CR Special 26-39	018-672	018-670
FCR33/35/37/39/41	021-051	018-670
FCR-MX37/39/41	018-202	018-670
PJ34/38	018-110	018-670
PE20/22	018-396	018-670
PE24	018-397	018-670
PE36	018-789	018-670
PE38	018-788	018-670
PWM38	018-202	018-670
PWK28	018-397	018-670
PWK33/35/36/38/41	018-110	018-670

Carburetor Float & Float Pin

Mikuni

Model	Year	Float	Float Pin
HSR42/45/48		007-497	002-107
RS34/36/38/40 Radial Slide Smoothbore		007-141	002-605
TM36/TM40		007-141	002-605
TM33		007-606	002-605
VM33 Smoothbore		002-501	002-605
VM29 Smoothbore		002-501	002-107
VM24/26 Roundslide (flange & clamp-on)		002-114	002-107
VM20 Roundslide (flange mount)		002-725	002-107
VM18 Roundlide		007-290	002-107

Suzuki Street

GS250TT/TX	80-81	007-727	002-605
GS300LZ/LD	82-83	007-727	002-605
GS300LF	1985	007-727	002-605
GT380J/K/L/M/A/B	72-77	002-114	002-605
GS450ED	1983	007-727	002-605
GS450GAZ/GAD Automatic	82-83	007-727	002-605
GS450GAF Automatic	1985	007-727	002-605
GS450LD	1983	007-727	002-605
GS450LF/LG/LH/LJ	85-88	007-727	002-605
GS450TXD	1983	007-727	002-605
GS550ET	1980	007-727	002-605
GS550LT/LX/LZ	80-82	007-727	002-605
GS550MZ	1982	007-727	002-605
GS550TX	1981	007-727	002-605
GT550J/K/L/M/A/B	72-77	002-114	002-605
GR650D/XD Tempter	1983	007-727	002-605
GS650EX/EZ	81-82	007-727	002-605
GS650GX/GZ/GD	81-83	007-727	002-605
GS650GLX/GLZ/GLD	81-83	007-727	002-605
GS650MD Katana	1983	007-727	002-605
GS700EF/ESF	1985	007-727	002-605
GS750ET/EX/EZ	80-82	007-727	002-605
GS750ED/ESD	1983	007-727	002-605
GS750LT/LX	80-81	007-727	002-605
GS750SD Katana	1983	007-727	002-605
GS750TZ/TD	82-83	007-727	002-605
GS850GT/GX/GZ/GD	80-83	007-727	002-605
GS850GLT/GLX/GLZ/GLD	80-83	007-727	002-605
GS1000ET	1980	007-727	002-605
GS1000GT/GX	80-81	007-727	002-605
GS1000GLT/GLX	80-81	007-727	002-605
GS1000ST	1980	007-727	002-605
GS1000SZ Katana	1982	007-727	002-605
GS1100ET/EX/EZ	80-82	007-727	002-605
GS1100ED/ESD	1983	007-727	002-605
GS1100GKZ/GK2/GKD/GKE	82-84	007-727	002-605
GS1100GLZ/GLD	82-83	007-727	002-605
GS1100LT	1980	007-727	002-605
GS1100SD	1983	007-727	002-605
GS1150ES3/ESE/EF/ESF/EF2	83-85	007-727	002-605
GS1150/EG/ESG	1986	007-727	002-605

Suzuki Offroad

Model	Year	Float	Float Pin
RM125R/S/T/V	94-97	018-110	018-670
RM125X/Y	99-00	018-110	018-670
RM250R/S/T/V/W/X/Y	94-00	018-110	018-670
RM-Z250K4/K5/K6/K7/K8/K9	04-09	018-202	018-670
RM-Z450K5/K6/K7	05-07	018-202	018-670

Yamaha Street

SR250G/H/J Exciter	80-82	002-114	002-605
SR250TH Exciter II	1981	002-114	002-605
XS400J/K Maxim	82-83	007-727	002-605
XS400RJ/RK Seca	82-83	007-727	002-605
XS500C	1976	002-114	002-605
FJ600L/LC/N/NC	84-85	007-727	002-605
XS1/XS1B/XS2-650	70-72	002-114	002-605
TX650/A	73-74	002-114	002-605
XS650B/C/D/E/F	75-79	002-114	002-605
XS6502F	1979	002-114	002-605
XS650G/H Special II	80-81	007-727	002-605
XS650SE/SF Special	78-79	002-114	002-605
XS650SG/SH Special	80-81	007-727	002-605
XS650SJ/SK Heritage Special	82-83	007-727	002-605
XJ700XN/XNC/XS/XSC Maxim X	85-86	007-727	002-605
007-727 and 002-605 will not fit XJ700N/NC/S/SC (85-86) Maxim applications with Hitachi carburetors. Verify carb body identification before ordering.			
TX750/A	73-74	002-114	002-605
XJ900RK Seca	1983	007-727	002-605
FJ1100L/LC/N/NC	84-85	007-727	002-605
XJ1100J Maxim	1982	007-727	002-605
XS1100H	1981	007-727	002-605
XS1100LH Midnight Special	1981	007-727	002-605
XS1100SH Special	1981	007-727	002-605
FJ1200S/SC/T/TC	86-87	007-727	002-605
FJ1200W/WC/A/AC/B/BC/D/DC	89-92	007-727	002-605
FJ1200AD/ADC/AE/AEC	92-93	007-727	002-605

Yamaha Offroad

WR250FN-FV	01-06	018-202	018-670
WR250FA/FB	11-12	018-202	018-670
YZ250FN-FY	01-09	018-202	018-670
WR400FM	2000	018-202	018-670
WR426FN/FP	01-02	018-202	018-670
YZ426FM/FN/FP	00-02	018-202	018-670
WR450FR/FS/FT/FV/FW/FX/FY	03-09	018-202	018-670
WR450FA	2011	018-202	018-670
YZ450FR/FS/FT/FV	03-06	018-202	018-670
YZ450FSPV	2006	018-202	018-670

KEIHIN Needle Valve & Needle Valve Sets

018-881

018-882

021-860

021-862K

018-880

018-884

Sudco Keihin Needle Valve Sets

Genuine OEM **KEIHIN** needle valve w/clip, needle valve seat, filter, o-ring for seat and screw for needle seat. Fits OEM carburetors listed. Sold as a set. ***Made in Japan.***

Model applications begin on page 252.

Husqvarna

Model	Year	OEM Reference	Order No.
SMR630 Replica	2004	8000 98272	018-881

Kawasaki

KLX400B1 (KLX400R)	1993	16030-S009	018-881
clip for 16030-S009		16030-S010	———
ZX600D1-D4 Ninja ZX-6	90-93	16030-1072	018-886
ZX600E1-E10 Ninja ZX-6	93-02	16030-1072	018-886
ZX60E11/E12 ZZR600	03-04	16030-1072	018-886
ZX600F1/F2/F3 Ninja ZX-6R	95-97	16030-1083	018-887
ZX750H1/H2 Ninja ZX-7	89-90	16030-1068	018-887
ZX750J1/J2 Ninja ZX-7	91-92	16030-1068	018-887
ZX750K1/K2 Ninja ZX-7R	91-92	16030-1073	018-887
ZX750L1/L2/L3 Ninja ZX-7	93-95	16030-1068	018-887
ZX750M1/M2 Ninja ZX-7R	93-94	16030-1073	018-887
ZX900C1/C2 Ninja ZX-9R	98-99	16030-1077	018-886
ZX900F1/F2 Ninja ZX-9R	02-03	16030-1077	018-886
ZX1000B1/B2/B3 Ninja ZX-10	88-90	16030-1068	018-887
ZX1100C1-C4 Ninja ZX-11	90-93	16030-1069	018-886
ZX1100D1-D9 Ninja ZX-11	93-01	16030-1077	018-886
ZX1200C1-C4 ZZR1200	02-05	16030-1077	018-886

Suzuki

DR-Z400EY-EK7	00-07	13371-29F00	018-881
DR-Z400Y/K1-K6	00-06	13371-29F00	018-881

When ordering for DRZ400, check that carburetor is Keihin FCR.

Yamaha

WR250FN/FP	01-02	5BE-14107-00-00	018-881
YZ250FN/FP	01-02	5BE-14107-00-00	018-881
WR400FK/FL/FM	98-00	5BE-14107-00-00	018-881
YZ400FK/FL	98-99	5BE-14107-00-00	018-881
WR426FN/FP	01-02	5BE-14107-00-00	018-881
YZ426FM/FN/FP	00-02	5BE-14107-00-00	018-881
YZF600R	95-07	4JH-14107-00-00	018-882

Sudco Keihin Needle Valves

Genuine OEM KEIHIN Needle Valves, with clip. Available for Keihin Aftermarket (genuine) and Keihin OEM (genuine) carburetors. Sold each. ***Made in Japan.***

Model applications begin on page 252.

Honda

Model	Year	OEM Reference	Order No.
CR85R/RB	05-08	16011-KBA-850	018-885
CR250R	84-98	16011-HA2-671	018-883
CRF250R	04-05	16011-KZ3-J11	018-884
CRF450R	02-05	16011-KZ3-J11	018-884
CRF250R/CRF450R	06-09	16011-MEN-851	018-884
CRF250X/CRF450X	07-09	16011-MEN-851	018-884
		16011-382-004	018-880
CBR600F2/F3/F4 Hurricane	91-00	16155-MN9-004	021-860**
		16155-397-971	021-862K
		16155-413-751	021-862K

** Keyster (Not OEM)

Husqvarna

TE610 FCR-MX Carbs	2006	8000 A5629	018-884

Kawasaki

EX500 with CVK	87-09	16030-1007	018-880
PWK & FCR-MX		16030-1057	018-884
VN750 Vulcan with CVK	86-87	16030-1057	018-884
ZRX1200	(all)	16030-1057	018-884
KX85/KX100 with PWK28	01-09	16030-1064	018-885

KTM

Keihin PWK & FCR-MX		5461020000	018-884
Keihin PWK28			018-885

Suzuki

RM85	02-09	13370-03B00	018-885
GSF600 Bandit with CVK		13370-26E00	018-880
RM250 with PJ Carb	93-96	13370-28E00	018-883
RM-Z250 with FCR-MX	07-09	13370-29F00	018-884
RM-Z450 with FCR-MX	05-07	13370-29F00	018-884
RM125 with PWK Carb		13370-43D30	018-884
RM-Z250 with FCR-MX	04-06	K1603-01057	018-884
RM100 with PWK28	2003	K1603-01064	018-885

Triumph

CVK Carburetor		T1241033	018-884

Yamaha

PWK/PWM & FCR-MX Carbs		4MX-14392-00-00	018-884
PWK28, YZ85	03-13	5PA-14392-00-00	018-885

MIKUNI Needle Valve Assemblies

007-953, 007-954

007-959

007-960

007-955

007-957

Sudco Mikuni Needle Valve Assemblies

Genuine OEM **"MIKUNI"** replacement needle valve assemblies. ***Made in Japan.*** Order by Sudco part number.

Model applications begin on page 252.

Honda

Model/Application	Year	Size	OEM Reference	Order No.
CR125R	02-07	3.8	16011-KZ4-A92	002-877
CR250R	01-07	3.8	16011-KZ4-A92	002-877

Kawasaki

H1-500/H2-750	(all)	2.5	16030-005	007-955
KZ750 2-cyl.	76-80	2.0	16030-026	007-976
KZ900/1000	76-80	2.3	16030-027	007-966
KZ650	77-80	2.0	16030-1001	007-958
KZ1000/1100	81-85	2.5	16030-1016	007-956
KX125	82-87	3.3	16030-1020	007-959
KXT250A/B Tecate	84-87	3.3	16030-1020	007-959
KLF220ABayou 220	88-02	1.5	16030-1066	007-967
KX125	01-05	3.8	16030-1096	002-877

Polaris

ATV (screw-in type) Assy.		2.5	3130360	007-964
			3130047-washer	002-188

Suzuki

RM60K3/K4	03-04	2.5	KK160-30005	007-955
DR350S Dual Sport	90-99	1.5	13370-02D00	007-971
GS500E	89-00	1.5	13370-02D00	007-971
LT-4WDL 4x4	90-96	1.5	13370-05320	007-967
DR-Z250K Offroad	01-07	1.8	13370-05530	007-502
(49 State model, E3-E28)				
See 13370-44500		2.0	13370-11400	007-957
See 13370-43B00		3.3	13370-14300	007-959
See 13370-41500		2.5	13370-18010	———
GS550	77-79	2.3	13370-18111	007-966
GS1000	77-78	2.3	13370-18111	007-966
See 13370-05320		1.5	13370-19B00	007-967
LS650	88-06	2.5	13370-24C80	007-970
RM125/RM250	89-92	3.5	13370-26C00	002-466
See 13370-41500		2.5	13370-32210	———
RM125	00-07	3.3	13370-36F00	007-954
See 13370-24C80		2.5	13370-37400	007-970
GT750 Lemans	72-73	2.5	13370-41500	———
LT250R/LT500R Quadracer		3.3	13370-43B00	007-959
See 13370-05320		1.5	13370-43250	007-967
See 13370-48B00		2.8	13370-43410	———
See 13370-02D00		1.5	13370-44B00	007-971K
GS750E	80-82	2.0	13370-44500	007-957
GS850G	80-83	2.0	13370-44500	007-957

Suzuki

Model/Application	Year	Size	OEM Reference	Order No.
See 13370-18111		2.3	13370-45010	007-966
GT380	72-73	2.0	13370-48051	007-958
See 13370-46E20			13370-46E00	007-972
See 13370-46E20			13370-46E10	007-972
GSX-R1100	93-98		13370-46E20	007-972K
GS550LF/LG	85-86	2.8	13370-48B00	———
GSX1100F Katana		2.8	13370-48B00	———
GT750 Lemans	74-77	2.0	13372-31210	007-976

Yamaha

XS750/XS1100	77-79	2.0	1J7-14190-20-00	007-976
YFZ350 Banshee	87-06	2.8	1UA-14190-28-00	007-978K
YFM350X Warrior	87-04	2.5	1UY-14107-25-00	007-977K
XS400 Maxim & Seca		2.0	11H-14107-20-00	007-957
XS650	72-79	2.0	168-14190-20-00	007-958
XS1B-650	1971	2.5	168-14190-25-00	007-955
See 23L-14107-25-00		2.5	168-14190-25-00	007-955
DT250		2.8	168-14190-28-00	007-963
YFS200 Blaster	88-06	2.8	2MA-14107-28-00	007-979
RD250, RD350, RD400	73-78	2.5	23L-14107-25-00	007-955
IT465H, YZ465		3.5	23X-14107-35-00	007-960
IT490, YZ490, WR500Z	82-93	3.5	23X-14107-35-00	007-960
IT250G/H/J/K	80-83	3.0	24X-14107-30-00	007-962
YZ125	77-88	3.3	24X-14107-33-00	007-961
YZ250	74-77	3.3	24X-14107-33-00	007-961
FJ600L/LC/N/NC	84-85	2.0	25G-14107-20-00	007-503
FJ1100	84-85	2.3	25G-14107-23-00	007-504
FJ1200	86-87	2.3	25G-14107-23-00	007-504
FJ1200	89-93	1.5	3CF-14107-15-00	007-980
YZ125/YZ250	89-94	3.5	3JD-14107-35-00	002-466
YZ125	95-08	3.8	4PE-14107-38-00	002-877

Genuine Mikuni Needle Valve Seat Filter

Used on the following Mikuni carburetors: RS34, RS36, RS38 & RS40 Smoothbore, VM29, VM33 Smoothbore, TM33 Pumper and OEM push type needle valve assembly. Sold each. Needle Valve Assembly not included. ***Made in Japan.***

Order No. 002-606

OEM reference for Needle Valve Seat Filter

Kawasaki 14043-1010	Late model KZ1000/1100
Suzuki 13376-19F00	GS series - GS750/1000/1100
Yamaha 1J7-14994-00-00	XS1100 Series

007-508

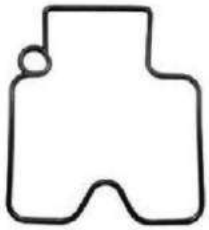

021-055

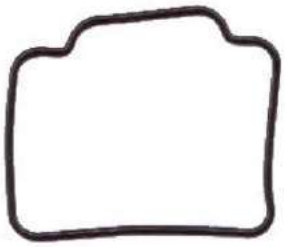

021-875

021-876

Sudco Float Bowl O-Rings

OEM (genuine) replacements. Sold each. ***Made in Japan.***

Model applications begin on page 251. * Non-Keihin Production

Arctic Cat

Model	Year	OEM Reference	Order No.
DVX400	04-07	4505-111	007-756
DVX400 Sport (Tony Stewart)	2007	4505-111	007-756

Honda

XL250	72-76	16010-329-305	021-889
CB750C/F/K/SC	79-83	16010-425-305	021-883
GL1100 Goldwing	80-83	16010-463-004	021-883
CB550SC Nighthawk		16010-MA6-305	021-880
CB700SC Nighthawk		16010-MA6-305	021-880
TRX90 Fourtrax & Sportrax	(all)	16163-GBG-960	021-884
TRX400EX Fourtrax & Sportrax	(all)	16163-HM7-700	021-882
VT600C Shadow (after 1999)		16163-HM7-700	021-882
CR85R/RB	05-07	16163-KBA-850	018-406
CB750K	77-78	16163-KCS-920	021-886
GL1500C Valkyrie	97-03	16163-KEA-000	021-874
CR250R	97-98	16163-KZ3-B10	*021-872
CR125R	00-01	16163-KZ4-A92	———
CR250R	01-03	16163-KZ4-A92	———
CR125R	84-99	16163-KZ4-J01	018-113
CR250R	81-96	16163-KZ4-J01	018-113
CR500R	84-01	16163-KZ4-J01	018-113
CR125R	02-07	16163-KZ4-L22	007-753
CR250R	04-07	16163-KZ4-L22	007-753
VT1100 Shadow		16163-MAH-750	021-885
GL1500 Goldwing		16163-MAH-750	021-885
VTR1000F Superhawk	98-03	16163-MBB-640	021-873
CRF150R	07-08	16163-MEB-671	021-731
CRF150RB	2008	16163-MEB-671	021-731
CRF250R/X	all	16163-MEB-671	021-731
CRF450R/X	all	16163-MEB-671	021-731
CBR600F2/F3/F4 Hurricane	91-00	16163-MZ5-920	021-871
CBR900RR	93-99	16163-MZ5-920	021-871

Husqvarna

CR125/WR125 with TMX Carb		———
CR250/WR250 with TMX Carb		———
TE250 with FCR-MX Carb		021-731
TE450 with FCR-MX Carb	8000 A5632	021-731
SMR630 with FCR41 Carb		021-055

Keihin

CR Special 29/31/33/35/37/39mm	0901-811-6000	018-668
FCR-37/39/41mm	1202-846-6000	021-055
FCR-MX37/39/41mm	1202-896-6000	021-731
PE20 - 24	W1354-042-9900	018-406
PWK28mm	W1354-042-9900	018-406
PJ/PWK35/36/38/39	16163-ND4-7510-M	018-113
PWM38	16163-ND4-7510-M	018-113

Kawasaki

Model	Year	OEM Reference	Order No.
KX80	88-00	92055-1389	018-406
KX85/KX100	01-13	92055-1389	018-406
KLX110A1-CCF	02-12	11060-170	021-884
KX125/250	88-97	11009-1716	018-113
KX125	03-05	92055-0001	007-753
KDX200	88-06	11009-1716	018-113
KL250G Super Sherpa	00-03	92055-1575	021-875
KX250	98-07	11060-1254	*021-872
KX250N1/N2 (KX250F)	04-05	92055-0066	021-731
KX250T6F/T7F/T8F (KX250F)	06-08	92055-0066	021-731
KLX400A1 Dual Sport	2003	92055-S058	007-756
KLX400B1 w/FCR39H Carb	2003	11061-S092	021-055
KSF400A1-A6F (ATV)	03-06	92055-S058	007-756
KX450D6F/D7F/D8F (KX450F)	06-08	92055-0066	021-731
EX500A1-D9F	87-09	92055-1222	021-887
ZX600F Ninja ZX-6R	95-97	92055-1426	021-888
KZ750E/H/N	80-83	16019-024	021-889
ZX750H/J/L ZX7	89-95	92055-1426	021-888
ZX750K1-M2 Ninja ZX-7R	92-94	11061-S092	021-055
ZX750P1-P8 Ninja ZX-7R	96-03	92055-1426	021-888

KTM

Models with standard PWK Carb	54531610000	018-113
Non Air Striker, no hole on o-ring		
Models with PWK AG Carb	54831010000	*021-872
Quad Vent/Air Striker with hole on o-ring		
Models with FCR-MX Carb	FCR-MX	021-731

Mikuni

HSR42/HSR45/HSR48	616-94028	007-472
RS34/RS36/RS38/RS40 (1, 3, & 4)	616-94020	007-140
RS34/RS36/RS38/RS40 (2)	616-94021	007-197
TM33-8012	619-94012	007-508
TM36/TM40	616-94021	007-197
TMS38	TMX38-252	002-484
TMX35-1	TMX38-252	002-484
TMX38-2, TMX-38-5	616-93054	007-753
TMX38-1	616-93036	———
TMX38-18, TMX38-27	TMX38-252	002-484

Suzuki

RM85	02-12	13251-03B00	018-406
RM100K3	2003	K9205-51389	018-406
DR-Z110K3/K4/K5	03-05	K1106-01700	021-884
RM125K1-K7	01-08	13251-36F00	007-753
RM125R/S/T/V/W	94-98	13696-28E00	018-113
DR250 Offroad w/TM33	90-93	13251-27A00	007-508
DR-Z250	01-07	13258-04F00	007-756
DR-Z250K Offroad w/TM33	01-07	13251-27A00	007-508
GZ250 X-K9	99-10	13258-04F00	007-756
LT-F250	99-01	13258-04F00	007-756
LT-F250F	99-02	13258-04F00	007-756
LT-Z250 K4-K9	04-09	13258-04F00	007-756
RM250P/R/S/T/V	93-97	13696-28E00	018-113
RM250W/X/Y/K1-K8	98-08	13696-44E00	*021-872

Sudco Float Bowl O-Rings & Top Cover O-Rings

018-406

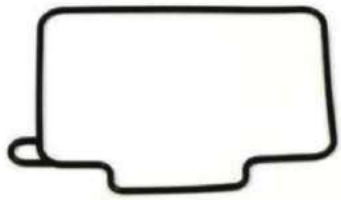

007-753

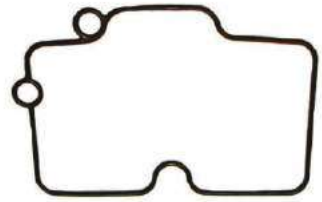

021-731

007-756

Suzuki

Model	Year	OEM Reference	Order No.
RM-Z250K4/K5/K6	04-06	K9205-50066	021-731
RM-Z250K7/K8	07-08	13251-35G00	021-731
LT-F300F	00-02	13258-04F00	007-756
DR350 Offroad w/TM33	90-99	13251-27A00	007-508
DR-Z400S	01-09	13258-04F00	007-756
DR-Z400SL1	2011	13258-04F00	007-756
DR-Z400SM	05-08	13258-04F00	007-756
DR-Z400 SMK5/SMK7 Supermotard	05-07	13258-04F00	007-756
DR-Z400 SY-SK7 Dual Sport	01-07	13258-04F00	007-756
DR-Z400 w/FCR39-H Carb	00-07	13251-29F00	021-055
LT-Z400K3-K8 Quadsport	03-08	13258-04F00	007-756
RM-Z450K5/K6/K7/K8	05-08	13251-35G00	021-731
GS500F	04-09	13258-04F00	007-756
GS500 FK4-FK7	04-07	13258-04F00	007-756
GSF600S Bandit	96-03	13258-26E00	021-887
GSX600F Katana	99-06	13258-04F00	007-756
GSX600 FW-FK6	98-06	13258-04F00	007-756
SV650	99-02	13258-33E00	021-877
GSX-R600	97-00	13258-33E00	021-877
GSX750 FW-FK6	98-06	13258-04F00	007-756
GSX-R750	85-86	13251-42A00	021-875
GSX-R750	88-95	13258-44B00	021-876
GSX-R750	96-99	13258-33E00	021-877
VL800	01-05	13258-33E00	021-877
GSF1200 SK1-SK5 Bandit	01-05	13258-04F00	007-756
GSF1200S	01-05	13258-04F00	007-756
VL1500	98-04	13258-33E00	021-877

Triumph

Models with Keihin CVK Carburetors	T1241036	021-887
Models with Mikuni CV Carburetors	1240060	021-876

Yamaha

YZ85	93-11	5PA-14984-00-00	018-406
YZ125	99-09	5ET-1416A-00-00	007-753
WR250F	01-11	5JG-14984-00-00	021-731
YFM250	05-07	5DM-14561-00-00	007-756
YZ250	95-98	4MX-14984-00-00	018-113
YZ250	99-13	4JT-14984-00-00	*021-872
YZ250F	03-12	5JG-14984-00-00	021-731
YFM350	96-07	2LN-14147-00-00	021-875
WR400FK/FL	98-99	3TJ-14984-40-00	021-055
YFM400	01-04	5DM-14561-00-00	007-756
YZ400FK/FL	98-99	3TJ-14984-40-00	021-055
WR426F	01-02	5JG-14984-00-00	021-731
YZ426F	00-02	5JG-14984-00-00	021-731
WR450	03-11	5JG-14984-00-00	021-731
YFM450	03-04	5DM-14561-00-00	007-756
YFZ450	04-08	5JG-14984-00-00	021-731
YXR450 Rhino 450 4WD	2006	5DM-14561-00-00	007-756
YZ450F	03-09	5JG-14984-00-00	021-731
TX500/A	73-74	93210-67232-00-00	021-889
XS500B	1975	93210-67232-00-00	021-889
FZR600	89-99	3GM-14997-00-00	———

Yamaha

Model	Year	OEM Reference	Order No.
YFM600 Grizzly	98-01	4WV-14147-20-00	021-876
YFM660 Grizzly	02-06	5DM-14561-00-00	007-756
YFM660 Raptor	01-05	5DM-14561-00-00	007-756
YXR660 Rhino	04-07	5DM-14561-00-00	007-756
YZF600R	95-07	4JH-14984-00-00	021-888
VMX12 V-Max	86-07	22V-14147-00-00	———
XV1600	99-03	5DM14561-00-00	007-756
XV1700	04-06	5DM-14561-00-00	007-756
YZF-R1	99-01	4XV-14562-00-00	021-877

007-755

007-754

Sudco TMX Top Cover O-Rings

Replacement top cover O-Rings for OEM TMX carburetor.
Made in Japan. Sold each.
See page 189-190 for Mikuni TMX replacement parts.

Honda

Model	Year	OEM Reference	Order No.
CR125R	00-01	———	007-755
CR125R	02-03	———	007-754
CR250R	01-03	———	007-755

Husqvarna

CR125/WR125 w/TMX		———	007-755
CR250/WR250 w/TMX		———	007-755

Kawasaki

KX125L3/L4	01-02	———	007-755
KX125M1/M2/M3	03-05	———	007-754

Suzuki

RM125K1/K2/K3/K4	01-04	13258-36F00	007-754

Yamaha

YZ125G/H1/J1/K1	95-98	4PE-14147-00	007-755
YZ125L/M/N/P/R	99-03	5ET-14147-00	007-754
YZ125S1/T1/V/W1/X1	04-08	5ET-14147-00	007-754
YZ125Y/Z/A1/B1/D2	09-13	5ET-14147-00	007-754

021-895

002-607

007-990

007-994

Sudco Float Bowl Gaskets

OEM (genuine) replacements. Sold each. ***Made in Japan.***

Model applications begin on page 252.

Honda

Model	Year	OEM Reference	Order No.
CT70	1978	16010-102-305	021-896
CT90	69-77	16010-102-305	021-896
CB750	69-76	16129-268-004	021-895

Kawasaki

KLT200A1/A2	81-82	11009-1028	021-895
KX125	78-81	11009-1079	002-101
KX60	83-03	11009-1147	007-250
KX65	all	11009-1147	007-250
KLX250A	79-80	11009-1156	007-996
KX80	80-87	11009-1178	007-251
KL250A	80-82	11009-1184	007-991
See 11060-1607		11009-1241	007-990
KD80N	88-90	11009-1250	007-282
KX125	82-87	11009-1275	002-700
KZ650, KZ1000	79-80	11009-1562	007-997
KZ650, KZ1000	77-78	11009-1563	007-994
KLF220/KLF250		11009-1676	007-999
KZ1000J/K/M/R	81-83	11060-1607	007-990
H1-500	69-75	16019-008	002-099
H2-750	72-75	16019-008	002-099
S2/S2A-350 **NEW**	72-73	16019-013	007-987
S3/S3A-400 **NEW**	74-75	16019-013	007-987
KH400A **NEW**	76-78	16019-013	007-987
Z1-900 frame 00001 to 32817	73-74	16019-019	007-992
S1/S1A/S1B-250/KH250 **NEW**	73-76	16019-021	007-988
Z1-900 from frame 32818 on	74-75	16019-025	007-993
KX250	78-82	16019-028	002-102
KZ750B1-B4 2-cylinder	76-79	16019-029	007-989

Mikuni

VM29 Smoothbore	VM26/258	002-502
VM33 Smoothbore	VM30/257	002-607
TM24, 20mm flange	VM20/492	007-250
TM28	VM26/228	007-251
TM32, TM34, TM36, TM38	VM34/374	002-700
VM18	VM17/161	007-283
22/26 - 34mm flange	VM30/103	002-099
28mm spigot	VM28/129	002-361
30 small body	VM30/172	002-103
30 - 34mm spigot (without baffle plate)	VM34/30	002-100
30 - 34mm spigot (with baffle plate)	VM34/71	002-101
36 - 44mm spigot	VM36/20	002-102

Polaris

Model	Year	OEM Reference	Order No.
Mikuni VM Zinc Carburetors		3130020	002-099

Suzuki

GT250K Hustler	73-77	13251-11010	002-009
LT500RQuadracer	all	13251-14300	002-700
DS80	83-00	13251-03410	007-282
See 13251-03410		13251-23011	007-282
See 13251-03410		13251-23010	007-282
RM80	86-89	13251-29630	007-251
GT750K/L/M/A Lemans **NEW**	73-77	13251-31210	007-989
DR250	82-85	13251-32410	007-996
DR370/DR400		13251-32410	007-996
GT380	73-77	13251-33110	002-099
GN250, LS650 Savage		13251-38300	007-991
RM250	76-80	13251-40600	002-102
GS550/750	77-79	13251-43010	007-994
GS850	80-83	13251-44080-H17	007-990
GS1150		13251-44080-H17	007-990
See 13251-44080-H17		13251-44080	007-990
See 13251-43010		13251-47010	007-994
RM250	88-92	13696-26C00	002-484
RM60	03-05	K1100-91147	007-250

Yamaha

XV1000	84-85	10L-14984-01-00	026-324
XJ650L Seca Turbo		16G-14147-00-00	———
AT1-125MX	69-73	156-14184-00-00	002-009
YCS1/YCS1C	1968	164-14184-00-00	007-282
XS750/1100	78-79	2A2-14984-01-00	007-991
SR500E/F	78-79	2H0-14184-00-00	007-996
YFB250 Timberwolf	92-00	24W-14184-00-00	007-999
XS650/TX650 **NEW**	70-78	256-14984-01-00	007-989
R5-350	70-72	278-14184-00-00	002-361
XS1100	80-81	3F7-14984-00-00	007-990
YZ125/250	89-94	3JE-14147-00-00	002-484
XS850	80-81	3J3-14984-00-00	026-326
FJ1100/FJ1200	all	3XW-14984-00-00	———
YFZ350 Banshee	all	304-14184-00-00	007-250
YZ250/YZ360	1974	310-14184-00-00	002-101
RD250/350/400		360-14184-01-00	007-995
YZ400	76-79	363-14184-00-00	002-102
XJ550 Maxim & Seca	81-83	46X-14984-00-00	007-998
See 46X-14984-00-00		4G0-14984-00-00	007-998
XJ650/XJ750	80-83	4H7-14984-01-00	026-320
XV750	81-83	4X7-14984-01-00	026-322
XV920	1982	4X7-14984-01-00	026-322
YZ100	77-83	537-14184-00-00	002-103

Needle Valve Sets, Needle Valves, Gaskets & O-Rings

Honda Street

Model	Year	Needle Valve Assy	Needle Valve	Float Bowl Gasket/O-Ring
C70 Passport	80-83	—	—	021-884
CT70H/HK1 Trail 70H	70-73	—	—	021-896
CT70K1/K2/K3/K4 Trail 70	72-75	—	—	021-896
CT70 Trail 70	76-77	—	—	021-896
CT70 Trail 70	80-82	—	—	021-884
CT70	91-94	—	—	021-884
CT90K1/K2/K3/K4 Trail 90	69-73	—	—	021-896
CT90K5/K6 Trail 90	74-75	—	—	021-896
CT90 Trail 90	76-77	—	—	021-896
CT90 Trail 90	78-79	—	—	021-884
ST90/K1/K2 Trailsport 90	73-75	—	—	021-896
XL100	77-78	—	018-880	021-886
XL100S	79-85	—	018-880	021-886
CB125S	78-82	—	018-880	021-886
CB125S	84-85	—	021-862K	021-886
CB125TT	1990	—	021-862K	—
CH125	1984	—	021-862K	—
CH150	1985	—	021-862K	021-886
CH150D	1985	—	021-862K	021-886
CT125 Trail 125	1977	—	—	—
MT125R	1978	—	018-883	018-113
NSF100	2006	—	—	021-886
NX125	88-90	—	021-862K	021-886
SL125/K1/K2 Motosport 125	71-73	—	—	—
XL125/K1	74-75	—	—	—
XL125 Carb ID 065C	1976	—	—	—
XL125 Carb ID PD65A	1976	—	018-880	021-886
XL125	77-78	—	018-880	021-886
XL125S	79-82	—	018-880	021-886
XL125S	84-85	—	018-880	021-886
CA175K3 Touring 175	1970	—	—	—
CB175K3 Super Sport	1969	—	—	—
CB175K4-K7 Super Sport 175	70-73	—	—	—
CL175K3 Scrambler 175	1970	—	—	—
CL175K4-K7 Scrambler 175	70-73	—	—	—
SL175K/K1 Motosport 175	70-72	—	—	—
CM185T Twinstar	78-79	—	018-880	021-886
XL185S	79-82	—	018-880	021-886
XL185S	1983	—	021-862K	—
CB200K	1974	—	—	—
CB200T	75-76	—	—	—
CL200 Scrambler	1974	—	—	—
CM200T Twinstar	80-82	—	018-880	021-886
XL200R	83-84	—	021-862K	021-886
CRF230L Dual Sport	08-09	—	—	021-880
CRF230M	2009	—	—	021-880
CB72 Hawk 250	61-66	—	—	021-895
CL72 Scrambler 250	62-65	—	—	021-895
CB250 Nighthawk 250	91-97	—	021-862K	021-882
CB250 Nighthawk 250	99-06	—	021-862K	021-882
CH250	1985	—	021-862K	—
CH250	1990	—	021-862K	—
CM250C	82-83	—	021-862K	021-883
CMX250C Rebel	85-87	—	021-862K	—
CMX250CD Rebel 250 Limited	1986	—	021-862K	—
CMX250C Rebel	96-06	—	021-862K	021-882
CMX250C2	99-00	—	021-862K	021-882
NSS250	03-06	—	021-862K	—
NSS250A	03-06	—	021-862K	—
NSS250AS	04-06	—	021-862K	—
NSS250S	04-06	—	021-862K	—
NX250	88-90	—	021-862K	—
PS250	05-06	—	021-862K	—
XL250K/K1/K2 Motosport	72-75	—	—	021-889
XL250	1976	—	—	021-889
XL250S	78-81	—	018-880	021-886
XL250R	82-83	—	021-862K	021-886
XL250R	84-87	—	018-880	021-886
XR250L	91-96	—	021-862K	021-886
CB77 Super Hawk 305	61-68	—	—	021-895
XL350	76-78	—	018-880	—
XL350R	84-85	—	018-880	—

Honda Street

Model	Year	Needle Valve Assy	Needle Valve	Float Bowl Gasket/O-Ring
CB400A Automatic	1978	—	018-880	021-883
CB400F Super Sport (4 cyl)	75-77	—	—	—
CB400T1 Hawk	78-79	—	018-880	021-883
CB400T11 Hawk	78-79	—	018-880	021-883
CB400T Hawk	80-81	—	021-862K	021-883
CM400A Automatic	1979	—	018-880	021-883
CM400A Automatic	80-81	—	021-862K	021-883
CM400C Custom	1981	—	021-862	021-883
CM400E	80-81	—	021-862K	021-883
CM400T	1979	—	018-880	021-883
CM400T	80-81	—	021-862K	021-883
CB450SC Nighthawk	82-83	—	021-862K	021-883
CB450SC Nighthawk	1985	—	021-862K	021-883
CB450SC Nighthawk	1986	—	021-862K	021-883
CB450T Hawk	1982	—	021-862K	021-883
CM450A Automatic	82-83	—	021-862K	021-883
CM450C Custom	1982	—	021-862K	021-883
CM450E	82-83	—	021-862K	021-883
CMX450C	86-87	—	021-862K	—
CB500/K1/K2 (4 cyl)	71-73	—	—	—
CX500	78-79	—	018-880	021-883
CX500C Custom	1979	—	018-880	021-883
CX500C Custom	80-82	—	021-862K	021-883
CX500D Deluxe	1979	—	018-880	021-883
CX500D Deluxe	80-82	—	021-862K	021-883
FT500 Ascot	82-83	—	021-862K	021-883
GB500	89-90	—	021-862K	021-880
GL500 Silverwing	81-82	—	021-862K	021-883
GL500I Silverwing Interstate	81-82	—	021-862K	021-883
VF500C Magna	84-85	—	018-880	—
VF500F Interceptor	84-85	—	018-880	—
XL500S	79-81	—	018-880	021-886
XL500R	1982	—	021-862K	021-886
CB550F Super Sport	75-77	—	—	—
CB550K/K1	74-75	—	—	—
CB550	1976	—	—	—
CB550K	77-78	—	018-880	—
CB550SC Nighthawk	1983	—	021-862K	021-880
CB600F	2004	—	—	021-871
CB600F	2006	—	—	021-871
CBR600F2 Hurricane	91-94	—	021-860	021-871
CBR600F3 Hurricane	95-98	—	021-862K	021-871
CBR600F4 Hurricane	99-00	—	021-862K	021-871
CBR600SE	1998	—	021-862K	021-871
CBR600SJR Replica	1996	—	021-862K	—
VT600C Shadow	88-89	—	018-880	021-885
VT600C Shadow	91-97	—	018-880	021-885
VT600C Shadow	99-03	—	021-860	021-882
VT600CD Shadow VLX	93-98	—	018-880	021-885
VT600CD Shadow VLX Deluxe	99-03	—	021-860	021-882
VT600CD2 Shadow VLX Deluxe	99-00	—	021-860	021-882
XL600R	83-87	—	018-880	—
CB650	79-80	—	018-880	—
CB650	81-82	—	021-862K	021-883
CB650C Custom	1980	—	018-880	—
CB650C Custom	81-82	—	021-862K	021-883
CB650SC Nighthawk	1982	—	021-862K	021-883
CB650SC Nighthawk	83-85	—	021-862K	021-880
CX650C Custom	1983	—	021-862K	021-883
GL650 Silverwing	1983	—	021-862K	021-883
GL650I Silverwing Interstate	1983	—	021-862K	021-883
NT650 Hawk GT	88-91	—	018-880	021-885
NX650	88-89	—	021-860	—
XR650L Dual Sport	93-09	—	021-860	—
CB700SC Nighthawk	84-85	—	021-862K	021-880
CB700SC Nighthawk	1986	—	018-880	021-880
VF700C Magna	84-86	—	018-880	021-885
VT700C Shadow	86-87	—	018-880	021-885
CB750 Nighthawk 750	91-93	—	021-862K	021-880
CB750 Nighthawk 750	95-03	—	021-862K	021-880

Needle Valve Sets, Needle Valves, Gaskets & O-Rings

Honda Street

Model	Year	Needle Valve Assy	Needle Valve	Float Bowl Gasket/O-Ring
CB750A Automatic	76-78	—	018-880	021-886
CB750C Custom	80-82	—	021-862K	021-883
CB750F Super Sport	76-78	—	018-880	—
CB750F Super Sport	1979	—	018-880	021-883
CB750F Super Sport	80-82	—	021-862K	021-883
CB750K0/K1/K2/K3/K4/K5	69-75	—	—	021-895
CB750K	1976	—	—	021-895
CB750K	77-78	—	018-880	021-886
CB750K	1979	—	018-880	021-883
CB750K	80-82	—	021-862K	021-883
CB750L LTD	1979	—	018-880	021-883
CB750SC Nighthawk	82-83	—	021-862K	021-883
VF750C V45 Magna	82-83	—	018-880	021-885
VF750C Magna	94-03	—	021-860	—
VF750CD Magna Deluxe	95-96	—	021-860	—
VF750C2 Magna Deluxe	97-00	—	021-860	—
VF750F V45 Interceptor	83-84	—	018-880	021-885
VF750S V45 Sabre	82-83	—	018-880	021-885
VFR750F	94-97	—	021-862K	—
VT750C Shadow	1983	—	018-880	021-885
VT750C Shadow	98-00	—	—	021-885
VT750CD Shadow Deluxe	98-01	—	—	021-885
VT750CD2 Shadow Deluxe	98-01	—	—	021-885
VT750CDA Shadow ACE 750	02-03	—	—	021-885
VT750CDB Shadow ACE 750	02-03	—	—	021-885
VT750CDC Shadow ACE 750	02-03	—	—	021-885
VT750CDD Shadow ACE 750	02-03	—	—	021-885
VT750DC Shadow Spirit 750	01-02	—	—	021-885
VT750DCA Shadow Spirit 750	03-06	—	—	021-885
VT750DCB Shadow Spirit 750	03-06	—	—	021-885
VT800C Shadow	1988	—	018-880	021-885
CB900C Custom	80-82	—	021-862K	021-883
CB900F Super Sport	81-82	—	021-862K	021-883
CBR900RR	93-95	—	021-862K	021-871
CBR900RR (CBR919RR)	96-99	—	021-860	021-871
CB1000	94-95	—	021-860	—
CB1000C Custom	1983	—	021-862K	021-883
VF1000F Interceptor	1984	—	018-880	021-885
VF1000R	85-86	—	018-880	021-885
VTR1000F Superhawk	98-05	—	—	021-873
CBX (1047cc)	79-82	—	018-880	021-883
CB1100F Super Sport	1983	—	021-862K	021-883
CBR1100XX Blackbird	97-98	—	021-860	021-871
GL1100 Goldwing	80-83	—	018-880	021-883
GL1100A Goldwing Aspencade	82-83	—	018-880	021-883
GL1100I Goldwing Interstate	80-83	—	018-880	021-883
VF1100C V65 Magna	83-86	—	018-880	021-885
VF1100S V65 Sabre	84-85	—	018-880	021-885
VT1100C Shadow	85-86	—	018-880	021-885
VT1100C Shadow	87-89	—	018-880	021-885
VT1100C Shadow	1990	—	—	021-885
VT1100C Shadow	92-94	—	—	021-885
VT1100C Shadow 1100	95-96	—	—	021-885
VT1100C Shadow Spirit	97-00	—	—	021-885
GL1200 Goldwing	1984	—	018-880	021-885
GL1200A Goldwing Aspencade	84-87	—	018-880	021-885
GL1200I Goldwing Interstate	84-87	—	018-880	021-885
GL1200L Goldwing LTD	1985	—	—	021-885
GL1500 Goldwing	88-90	—	—	021-885
GL1500A Goldwing Aspencade	91-00	—	—	021-885
GL1500C Valkyrie	97-00	—	021-862K	021-874
GL1500CT Valkyrie Tourer	97-00	—	021-862K	021-874
GL1500I Goldwing Interstate	91-96	—	—	021-885
GL1500SE Goldwing SE	90-00	—	—	021-885

Honda ATV

Model	Year	Needle Valve Assy	Needle Valve	Float Bowl Gasket/O-Ring
ATC70	73-74	—	—	021-896
ATC70	78-85	—	—	021-884
TRX70 Fourtrax 70	86-87	—	—	021-884
ATC90	70-71	—	—	021-896

Honda ATV

Model	Year	Needle Valve Assy	Needle Valve	Float Bowl Gasket/O-Ring
ATC90K1/K2/K3	72-75	—	—	021-896
ATC90	76-78	—	—	021-896
TRX90 Fourtrax 90	93-01	—	—	021-884
TRX90 Sportrax 90	02-06	—	—	021-884
ATC110	79-85	—	—	021-884
ATC125M	84-87	—	—	021-884
TRX125 Fourtrax 125	85-86	—	—	021-884
ATC185	1980	—	018-880	021-886
ATC185S	81-82	—	018-880	021-886
ATC185S	1983	—	021-862K	021-886
ATC200	81-82	—	018-880	021-886
ATC200	1983	—	021-862K	021-886
ATC200E Big Red	82-83	—	021-862K	021-886
ATC200ES Big Red	1984	—	021-862K	021-886
ATC200M	84-85	—	021-862K	021-886
ATC200S	84-85	—	021-862K	021-886
ATC200S	1986	—	021-862K	021-886
ATC200X	83-85	—	021-862K	021-886
ATC200X	86-87	—	021-862K	021-886
TRX200 Fourtrax 200	1984	—	021-862K	021-886
TRX200 Fourtrax 200	90-91	—	021-862K	021-886
TRX200D Fourtrax Type II	91-97	—	021-862K	021-886
TRX200SX Fourtrax	86-88	—	021-862K	021-886
ATC250ES	1985	—	021-862K	021-880
ATC250ES	86-87	—	021-862K	021-880
ATC250R	81-82	—	018-885	—
ATC250R	85-86	—	018-883	018-113
ATC250SX	1985	—	021-862K	021-880
ATC250SX	86-87	—	021-862K	021-880
TRX250 Fourtrax 250	1985	—	021-862K	021-880
TRX250 Fourtrax 250	86-87	—	021-862K	021-880
TRX250 Recon	97-01	—	021-862K	021-886
TRX250EX Sportrax 250 EX	01-08	—	021-862K	021-886
TRX250R Fourtrax 250R	86-89	—	018-883	018-113
TRX250TE Fourtrax Recon ES	02-09	—	021-862K	021-886
TRX250TE Fourtrax Recon ES	11-12	—	—	021-886
TRX250TM Fourtrax Recon	02-09	—	021-862K	021-886
TRX250TM Fourtrax Recon	2012	—	021-862K	021-886
TRX250X Fourtrax	87-88	—	021-862K	021-882
TRX250X Fourtrax	91-92	—	021-862K	021-882
TRX250X	2009	—	021-862K	021-886
TRX250X	2012	—	021-862K	021-886
TRX300 Fourtrax 300	88-00	—	021-862K	021-882
TRX300EX Fourtrax 300 EX	93-00	—	021-862K	021-882
TRX300EX up to carb QB02BA	2001	—	021-862K	021-882
TRX300EX from carb QB02BB	2001	—	021-862K	021-882
TRX300EX Sportrax 300 EX	02-06	—	021-862K	021-882
TRX300FW Fourtrax 300 4x4	1988	—	021-862K	021-882
TRX300FW Fourtrax 300 4x4	90-00	—	021-862K	021-882
ATC350X	1985	—	021-862K	021-880
ATC350X	1986	—	021-862K	021-880
TRX350 Fourtrax 4x4	86-87	—	021-862K	021-880
TRX350D Fourtrax Foreman 4x4	87-89	—	021-862K	021-880
TRX350FE Fourtrax Rancher 4x4 ES	00-03	—	021-862K	021-882
TRX350FE Fourtrax Rancher 4x4 ES	04-06	—	—	021-882
TRX350FM Fourtrax Rancher 4x4	00-03	—	021-862K	021-882
TRX350FM Fourtrax Rancher 4x4	04-06	—	—	021-882
TRX350TE Fourtrax Rancher ES	00-03	—	021-862K	021-882
TRX350TE Fourtrax Rancher ES	04-06	—	—	021-882
TRX350TM Fourtrax Rancher	00-03	—	021-862K	021-882
TRX350TM Fourtrax Rancher	04-06	—	—	021-882
TRX400EX Fourtrax 400 EX	99-00	—	021-860	021-882
TRX400EX Sportrax 400 EX	01-04	—	021-860	021-882
TRX400FM Fourtrax Foreman	2002	—	021-862K	021-882
TRX400FW Fourtrax Foreman 4x4	95-01	—	021-862K	021-882
TRX400FW Fourtrax Foreman	2003	—	021-862K	021-882
TRX450ES Fourtrax Foreman ES	98-01	—	021-862K	021-882
TRX450FE Fourtrax Foreman ES	02-04	—	021-862K	021-882
TRX450FM Fourtrax Foreman S	02-04	—	021-862K	021-882
TRX450ER w/electric start	06-09	—	018-884	021-731
TRX450R	04-05	—	—	—
TRX450R	06-09	—	018-884	021-731

Needle Valve Sets, Needle Valves, Gaskets & O-Rings

Honda ATV

Model	Year	Needle Valve Assy	Needle Valve	Float Bowl Gasket/O-Ring
TRX450S Fourtrax Foreman S	98-01	—	021-862K	021-882
TRX500FA Foreman Rubicon	01-03	—	—	021-882

Honda Dual Sport & Offroad

Model	Year	Needle Valve Assy	Needle Valve	Float Bowl Gasket/O-Ring
CRF50F	04-09	—	—	—
CRF50F	11-12	—	—	—
XR50R	00-03	—	—	—
Z50A Mini Trail 50	76-78	—	—	—
Z50R	79-89	—	—	—
Z50R	91-99	—	—	—
Z50RD	1986	—	—	—
ZB50	1988	—	—	021-884
CR60R	1983	—	018-885	—
CRF70F	04-09	—	—	021-884
CRF70F	11-12	—	—	021-884
CT70H/HK1 Trail 70H	70-73	—	—	021-896
CT70K1/K2/K3/K4 Trail 70	72-75	—	—	021-896
CT70 Trail 70	76-77	—	—	021-896
CT70 Trail 70	78-79	—	—	—
CT70 Trail 70	80-82	—	—	021-884
CT70	91-94	—	—	021-884
XR70R	97-03	—	—	021-884
XL75	77-79	—	—	—
XR75/K1/K2	73-75	—	—	—
XR75	76-78	—	—	—
CR80R	80-95	—	018-885	—
CR80R	96-02	—	018-885	018-406
CR80RB Expert	96-02	—	018-885	018-406
CRF80F	04-09	—	—	—
CRF80F	11-12	—	—	—
XL80S	80-85	—	—	—
XR80	79-84	—	—	—
XR80R	85-86	—	—	—
XR80R	87-88	—	—	—
XR80R	90-91	—	—	—
XR80R	93-03	—	—	—
CR85R	03-07	—	018-885	018-406
CR85RB Expert	03-07	—	018-885	018-406
CT90K1/K2/K3/K4 Trail 90	69-73	—	—	021-896
CT90K5/K6 Trail 90	74-75	—	—	021-896
CT90 Trail 90	76-77	—	—	021-896
CT90 Trail 90	78-79	—	—	021-883
ST90/K1/K2 Trailsport 90	73-75	—	—	021-896
CRF100F	04-09	—	018-880	021-886
SL100/K1/K2/K3 Motosport 100	70-73	—	—	—
XL100/K1	74-75	—	—	—
XL100	1976	—	—	—
XL100	77-78	—	018-880	021-886
XL100S	79-85	—	018-880	021-886
XR100	81-84	—	018-880	021-886
XR100R	85-97	—	018-880	021-886
XR100R	98-03	—	018-880	021-886
CT110 Trail 110	80-84	—	—	021-884
CT110 Trail 110	1986	—	—	021-884
CR125R	81-83	—	—	018-113
CR125R	84-99	—	018-883	018-113
CR125R	00-01	002-877	—	—
CR125R	02-07	002-877	—	007-753
NX125	88-90	—	021-862K	021-886
XL125 Carb ID PD65A	1976	—	018-880	021-886
XL125	77-78	—	018-880	021-886
XL125S	79-82	—	018-880	021-886
XL125S	84-85	—	018-880	021-886
CRF150F	03-09	—	—	021-886
CRF150R	07-09	—	—	021-731
CRF150R	2012	—	—	021-731
CRF150RB	07-09	—	—	021-731
CRF150RB	2012	—	—	021-731
XL185S	79-82	—	018-880	021-886
XL185S	1983	—	021-862K	021-886
XR185	1979	—	018-880	021-886
TLR200 Reflex	86-87	—	—	—

Honda Dual Sport & Offroad

Model	Year	Needle Valve Assy	Needle Valve	Float Bowl Gasket/O-Ring
TR200 Fatcat	1986	—	021-862K	021-886
TR200 Fatcat	1987	—	021-862K	021-886
XL200R	83-84	—	021-862K	021-886
XR200	80-84	—	018-880	021-886
XR200R	81-88	—	018-880	021-886
XR200R	90-97	—	018-880	021-886
XR200R	98-02	—	—	021-886
CRF230F	03-07	—	—	021-886
CRF230L	08-09	—	—	021-880
CRF230M	2009	—	—	021-880
CR250R	81-83	—	—	018-113
CR250R	84-96	—	018-883	018-113
CR250R	97-98	—	018-883	*021-872
CR250R	99-00	—	018-884	018-113
CR250R	01-03	002-877	—	—
CR250R	04-07	002-877	—	007-753
CRF250R	04-09	—	018-884	021-731
CRF250X	04-09	—	018-884	021-731
CRF250X	2012	—	018-884	021-731
NX250	88-90	—	021-862K	
——XL250K/K1/K2 Motosport	72-75	—	—	021-889
XL250 Motosport	1976	—	—	021-889
XL250S	78-81	—	018-880	021-886
XL250R	82-83	—	021-862K	021-886
XL250R	84-87	—	018-880	021-886
XR250L	91-96	—	021-862K	021-886
XR250	79-80	—	018-880	021-886
XR250R	81-82	—	018-880	021-886
XR250R	84-85	—	018-880	—
XR250R	86-04	—	018-880	021-886
XL350	76-78	—	018-880	—
XL350R	84-85	—	018-880	—
XR350R	83-85	—	018-880	—
XR400R	96-04	—	018-883	021-886
CR450R	1981	—	—	018-113
CRF450R	02-08	—	018-884	021-731
CRF450X	05-09	—	018-884	021-731
CRF450X	2012	—	018-884	021-731
CR500R	84-01	—	018-883	018-113
XL500S	79-81	—	018-880	021-886
XL500R	1982	—	021-862K	021-886
XR500	79-80	—	018-880	021-886
XR500R	81-82	—	018-880	021-886
XR500R	83-84	—	018-880	—
XL600R	83-87	—	018-880	—
XR600R	85-87	—	018-880	—
XR600R	88-00	—	018-883	021-886
NX650	88-89	—	021-860	021-880
XR650L Dual Sport	93-09	—	021-860	021-880
XR650L Dual Sport	2012	—	021-860	021-880
XR650R	00-07	—	018-883	018-113

Kawasaki Street

G3SS/A/B/C/D-90	69-74	—	—	007-988
KZ200A1/A2	78-79	—	—	021-895
A1/A1SS250 Samurai	1968	—	—	—
EL250B2/B3 Eliminator	88-89	—	018-880	021-887
EL250E1/E2/E3/E4 Eliminator	91-94	—	018-880	021-887
EX250E1/E2 Ninja 250R	86-87	—	018-880	021-887
EX250F2/F3/F4 Ninja 250R	88-90	—	018-880	021-887
EX250F6-F19 Ninja 250R	92-05	—	018-880	021-887
EX250F6F/F7F Ninja 250R	06-07	—	018-880	021-887
EX250J8F/J9F Ninja 250R	08-09	—	018-880	021-887
EX250JAF/JBF/JCF Ninja 250R	10-12	—	018-880	021-887
KH250A5 (2-stroke triple)	1976	—	—	007-988
KL250A1/A1A/A2 Dual Sport	78-79	—	018-880	021-889
KL250A3/A4/A5 Dual Sport	80-82	—	—	007-991
KL250D2-D22 KLR250	85-05	—	018-880	021-887
KLX250H6F/H7F Dual Sport	06-07	—	018-880	021-887

Needle Valve Sets, Needle Valves, Gaskets & O-Rings

Kawasaki Street

Model	Year	Needle Valve Assy	Needle Valve	Float Bowl Gasket/O-Ring
KLX250T9F/T9FL KLX250S	2009	—	018-880	021-887
KLX250TAF/TAFL KLX250S	2010	—	018-880	021-887
KLX250W9F/W9FLKLX250SF	2009	—	018-880	021-887
KLX250WAF KLX250SF	2010	—	018-880	021-887
KZ250D1/D2 LTD & CSR	80-81	—	018-880	021-889
KZ250L1 CSR	1982	—	018-880	021-889
KZ250W1 LTD	1983	—	018-880	021-889
S1A/S1B/S1C250 (triple)	73-75	—	—	007-988
EX305B1 GPz	1983	—	018-880	021-889
KZ305A1/A2 CSR	81-82	—	018-880	021-889
KZ305B1 CSR Belt	1981	—	018-880	021-889
KZ305B2/B3 LTD	87-88	—	018-880	021-889
A7-350 Avenger	67-71	—	—	002-099
A7SS-350 Avenger SS	70-71	—	—	002-099
S2/S2A-350 (2-stroke triple)	72-73	007-955	—	007-987
S3/S3A-400 (2-stroke triple)	74-75	007-955	—	007-987
KH400A3/A4/A5 (2-stroke triple)	76-78	007-955	—	007-987
KZ400A1/A2 Deluxe	77-78	—	018-880	021-889
KZ400B1/B2	78-79	—	018-880	021-889
KZ400C1	1978	—	018-880	021-889
KZ400/D/D3/D4	74-77	—	018-880	021-889
KZ400H1 LTD	1979	—	018-880	021-889
KZ400S/S2/S3 Special	75-77	—	018-880	021-889
KZ440A1/A2/A3/A4 LTD	80-83	—	018-880	021-889
KZ440B1/B2	80-81	—	018-880	021-889
KZ440D1/D2/D3/D4/D5 LTD	80-83	—	018-880	021-889
KZ440G1 Belt	1982	—	018-880	021-889
EN450A1-A6 LTD 454	85-90	—	018-880	021-887
EN500A1-A7 Vulcan 500	90-96	—	018-880	021-887
EN500C1-C10 Vulcan 500 LTD	96-05	—	018-880	021-887
EN500C6F-C9F Vulcan 500 LTD	06-09	—	018-880	021-887
ER500A3/A4 ER5	99-00	—	018-880	021-887
ER500C1/C2 ER5	01-02	—	018-880	021-887
EX500A1-A7	87-93	—	018-880	021-887
EX500D1/D2/D3 Ninja 500	94-96	—	018-880	021-887
EX500D4-D12 Ninja 500R	97-05	—	018-880	021-887
EX500D6F-D9F Ninja 500R	06-09	—	018-880	021-887
H1/A/B/C-500 (2-stroke triple)	69-72	007-955	—	002-099
H1D/H1E/H1F-500	73-75	007-955	—	002-099
KH500A8 (2stroke triple)	1976	007-955	—	002-099
ZR550B1/B2/B3/B4 Zephyr	90-93	—	018-880	021-887
KL600A1 KLR600	1984	—	018-884	021-887
KL600B1/B2 KLR600	85-86	—	018-884	021-887
ZL600A1/A2 Eliminator	86-87	—	018-880	021-887
ZL600B2/B3 Eliminator	96-97	—	018-880	021-887
ZX600A1/A2/A3 Ninja 600R	85-87	—	018-880	021-887
ZX600B1 Ninja 600RX	1987	—	018-880	021-887
ZX600C1-C10 Ninja 600R	88-97	—	018-880	021-887
ZX600D1/D2/D3/D4 Ninja ZX6	90-93	018-886	018-880	021-888
ZX600E1-E10 Ninja ZX6	93-02	018-886	018-880	021-888
ZX600E11/E12 ZZR600	03-04	018-886	018-880	021-888
ZX600F1/F2/F3 Ninja ZX6R	95-97	018-887	018-880	021-888
EJ650A2/A3 (W650 twin)	00-01	—	018-884	—
KL650A10-A19 KLR650	87-05	—	018-884	021-887
KL650A6F/A7F KLR650	06-07	—	018-884	021-887
KL650B2/B3 Tengai KLR650	90-91	—	018-884	021-887
KL650E8F/E9F KLR650	08-09	—	018-884	021-887
KL650EAF-EDF KLR650	10-13	—	018-884	021-887
KLX650C1-C4 Dual Sport	93-96	—	018-884	021-887
KZ650B1/B2/B2A	77-78	007-958	—	007-994
KZ650B3	1979	007-958	—	007-997
KZ650C1/C2 Custom	77-78	007-958	—	007-994
KZ650C3 Custom	1979	007-958	—	007-997
KZ650D1/D1A SR	1978	007-958	—	007-994
KZ650D2 SR	1979	007-958	—	007-997
KZ650E1 LTD	1980	007-958	—	007-997
KZ650F1	1980	007-958	—	007-997
KZ650H1 CSR	1981	007-958	—	007-994
KZ650H2/H3 CSR	82-83	—	—	007-990
KZ700A1	1984	007-956	—	007-990
ZN700A1/A2 LTD	84-85	—	018-880	021-889
VN700A1 Vulcan	1985	—	018-884	—

Kawasaki Street

Model	Year	Needle Valve Assy	Needle Valve	Float Bowl Gasket/O-Ring
H2/A/B/H2C-750 Mach IV	72-75	007-955	—	002-099
KZ750B1/B2/B3/B4 (2 cylinder)	76-79	007-976	—	007-989
KZ750E1/E2/E3	80-82	—	018-880	021-889
KZ750F1 LTD Shaft	1983	—	018-880	021-889
KZ750G1 LTD (2 cylinder)	1980	007-976	—	007-989
KZ750H1/H2/H3/H4 LTD	80-83	—	018-880	021-889
KZ750K1/K2 LTD (2 cylinder)	83-84	007-956	—	007-990
KZ750L3	1983	007-956	—	007-990
KZ750M1 CSR (2 cylinder)	82-83	007-956	—	007-990
KZ750N1/N2 Spectre	82-83	—	018-880	021-889
KZ750R1 GPz	1982	007-956	—	007-990
VN750A2-A21 Vulcan 750	86-05	—	018-884	—
VN750A6F Vulcan 750	2006	—	018-884	—
ZR750C1/C2/C3 Zephyr	91-93	—	018-880	021-887
ZR750F2 ZR7	2000	—	018-884	021-887
ZR750H1/H2/H3 ZR7S	01-03	—	018-884	021-887
ZX750A1/A2/A3 GPz	83-85	007-956	—	007-990
ZX750F1/F2/F3/F4 Ninja 750R	87-90	—	018-880	021-887
ZX750H1/H2 Ninja ZX-7	89-90	018-887	018-880	021-888
ZX750J1/J2 Ninja ZX-7	91-92	018-887	018-880	021-888
ZX750K1/K2 Ninja ZX-7R	92-93	018-887	018-880	021-055
ZX750L1/L2/L3 Ninja ZX-7	93-95	018-887	018-880	021-888
ZX750M1/M2 Ninja ZX-7R	93-94	018-887	018-880	021-055
ZX750N1/N2 Ninja ZX7-RR	96-97	—	—	021-055
ZX750P1-P8 Ninja ZX-7R	96-03	—	018-880	021-888
KZ900A4/A5	76-77	007-966	—	007-994
KZ900B1 LTD	1976	007-966	—	007-994
KZ900C2 Police	1976	007-966	—	007-994
Z1/Z1A-900 (frame 00001 to 32817)	73-74	—	—	007-992
Z1A-900 (from frame 32818 on)	1974	—	—	007-993
Z1B-900	1975	—	—	007-993
ZL900A1/A2 Eliminator	85-86	—	018-880	021-887
ZX900A1/A2/A3 Ninja	84-86	—	018-880	021-887
ZX900B1-B4 Ninja ZX9R	94-97	—	018-880	021-888
ZX900C1/C2 Ninja ZX9R	98-99	018-886	018-880	021-888
ZX900F1/F2 Ninja ZX9R	02-03	018-886	018-880	021-888
KZ1000A1/A2	77-78	007-966	—	007-994
KZ1000A3/A3A/A4 MKII	79-80	007-966	—	007-997
KZ1000B1/B2 LTD	77-78	007-966	—	007-994
KZ1000B3/B4 LTD	79-80	007-966	—	007-997
KZ1000C1/C1A Police	1978	007-966	—	007-994
KZ1000C2/C3/C4 Police	7981	007-966	—	007-997
KZ1000D1 Z1R	1978	007-966	—	007-994
KZ1000D3 Z1R	1980	007-966	—	007-997
KZ1000E1/E2 Shaft ST	79-80	007-966	—	007-997
KZ1000J1/J2/J3	81-83	007-956	—	007-990
KZ1000K1/K2 LTD	81-82	007-956	—	007-990
KZ1000M1/M2 CSR	81-82	007-956	—	007-990
KZ1000P1-P22 Police	82-03	007-956	—	007-990
KZ1000P24 Police	2005	007-956	—	007-990
KZ1000R1/R2 Replica	82-83	007-956	—	007-990
ZG1000A1-A20 Concours	86-05	—	018-880	021-887
ZG1000A6F Concours	2006	—	018-880	021-887
ZL1000A1 Eliminator	1987	—	018-880	021-887
ZX1000A1/A2 Ninja 1000R	86-87	—	018-880	021-887
ZX1000B1/B2/B3 Ninja ZX-10	88-90	018-887	018-880	021-888
KZ1100A1/A2/A3 Shaft	81-83	007-956	—	007-990
KZ1100D1/D2 Spectre	82-83	007-956	—	007-990
KZ1100L1 LTD	1983	007-956	—	007-990
ZN1100B1/B2 LTD Shaft	84-85	007-956	—	007-990
ZR1100A1/A2/A3/A4	92-95	—	018-880	021-887
ZR1100C3/C4 ZRX1100	99-00	—	018-884	021-887
ZX1100C1-C4 Ninja ZX11	90-93	018-886	018-880	021-888
ZX1100D1-D9 Ninja ZX11	93-01	018-886	018-880	021-888
ZX1100E1/E2/E3 GPz	95-97	—	018-884	021-887
ZX1100F1 GPz (ABS)	1996	—	018-884	021-887
ZG1200A1 Voyager XII	1986	—	018-880	021-887
ZG1200B1-B17 Voyager XII	87-03	—	018-880	021-887
ZR1200A1-A5 ZRX1200	01-05	—	018-884	021-887
ZX1200C1-C4 ZZR1200	02-05	018-886	018-880	021-888
VN1500A1-A9 Vulcan 88	87-95	—	018-880	—
VN1500A10-A13 Vulcan 1500	96-99	—	018-880	—

Needle Valve Sets, Needle Valves, Gaskets & O-Rings

Kawasaki Street

Model	Year	Needle Valve Assy	Needle Valve	Float Bowl Gasket/O-Ring
VN1500B1-B4 Vulcan 88 SE	87-90	—	018-880	—
VN1500C3/C4 Vulcan 1500L	96-97	—	018-880	—

Kawasaki ATV

Model	Year	Needle Valve Assy	Needle Valve	Float Bowl Gasket/O-Ring
KLT200A1/A2	81-82	—	018-880	021-895
KLT200A3 up to frame # 522924	1982	—	018-880	021-895
KLT200A3 from frame # 522925	1982	—	018-880	021-889
KLT200A4/A4A	1983	—	018-880	021-889
KLT200B1	1983	—	018-880	021-889
KLT200C1	1983	—	018-880	021-889
KLF220A1-A15 Bayou 220	88-02	007-967	—	007-999
KLF250A1/A2/A3 Bayou 250	03-05	007-967	—	007-999
KLF250A6F-ABF Bayou 250	06-11	007-967	—	007-999
KLT250A1/A2	82-83	—	018-880	021-889
KLT250C1/C2/C3 Prairie	83-85	—	018-880	021-889
KLT250P1 Police	1984	—	018-880	021-889
KSF250A1-A17 Mojave 250	87-03	—	018-880	021-887
KSF250A18 KFX250 Mojave	2004	—	018-880	021-887
KXF250A1 Tecate 4	1987	007-959	—	002-700
KXF250A2 Tecate 4	1988	—	018-884	018-113
KXT250A1/A2 Tecate 3	84-85	007-959	—	002-700
KXT250B1/B2 Tecate 3	86-87	007-959	—	002-700
KEF300A1-A6 Lakota 300	95-00	—	018-880	021-887
KEF300B1/B2/B3 Lakota Sport	01-03	—	018-880	021-887
KLF300A1/A2 Bayou	86-87	—	018-880	021-887
KLF300B1-B17 Bayou 300	88-04	—	018-880	021-887
KLF300C1-C16 Bayou 300 4x4	89-04	—	018-880	021-887
KVF300A1-A4 Prairie 300 4x4	99-02	—	018-880	021-887
KVF300B1-B4 Prairie 300	99-02	—	018-880	021-887
KVF360A1/A2/A3 Prairie 360 4x4	03-05	—	018-880	021-887
KVF360A6F-A9F Prairie 360 4x4	06-09	—	018-880	021-887
KVF360A Prairie 360 4x4	10-12	—	018-880	021-887
KVF360B1/B2/B3 Prairie 360	03-05	—	018-880	021-887
KVF360B6F-B9F Prairie 360	06-09	—	018-880	021-887
KVF360C1 Prairie 360 4x4	2003	—	018-880	021-887
KVF360C2/C3 Prairie 360 4x4 Hardwoods Green HD	04-05	—	018-880	021-887
KVF360C6F-C9F Prairie 360 4x4 Hardwoods Green HD	06-09	—	018-880	021-887
KLF400B1B7 Bayou 400 4x4	93-99	—	018-880	—
KSF400A1-A6F KFX400	03-06	—	018-880	007-756
KVF400A1/A2 Prairie 400 4x4	97-98	—	018-880	—
KVF400B1 Prairie 400	1998	—	018-880	—
KVF400C1C4 Prairie 400 4x4	99-02	—	018-880	—
KVF400D1-D4 Prairie 400	99-02	—	018-880	—
KVF650A1/A2 Prairie 650 4x4	02-03	—	018-880	—
KVF650B1/B2 Prairie 650 4x4	02-03	—	018-880	—
KVF650D1/D6F/D7F Brute Force 4x4	05-07	—	018-880	—
KVF650E Brute Force 650 4x4 Hardwoods Green HD	05-07	—	018-880	—
KSV700A KFX700 V-Force	04-05	—	018-880	—
KSV700A KFX700 V-Force	06-07	—	018-880	—
KSV700B1/B2 KFX700 VForce	04-05	—	018-880	—
KSV700B6F/B7F KFX700 VForce	06-07	—	018-880	—
KVF700A1/A2 Prairie 700 4x4	04-05	—	018-880	—
KVF700A6F Prairie 700 4x4	2006	—	018-880	—
KVF700B1 Prairie 700 4x4	2004	—	018-880	—
KVF700D1 Prairie 700 4x4	2005	—	018-880	—
KVF700D6F Prairie 700 4x4	2006	—	018-880	—
KVF750A6F/A7F Brute Force 4x4i Hardwoods Green HD	06-07	—	018-880	—
KVF750B Brute Force 4x4i Hardwoods Green HD	05-07	—	018-880	—
KVF750A1 Brute Force 4x4i	2005	—	018-880	—
KVF750B7FA Brute Force 4x4i	2007	—	018-880	—
KVF750C6F/C7FBrute Force 4x4i	06-07	—	018-880	—

Kawasaki Dual Sport & Offroad

Model	Year	Needle Valve Assy	Needle Valve	Float Bowl Gasket/O-Ring
KX60A1/A2	83-84	007-955	—	007-250
KX60B1-B19	85-03	007-955	—	007-250
KX65A1/A2/A3/A4/A5/A6	00-05	002-892	—	007-250
KX65A6F/A7F/A8F/A9F	06-09	002-892	—	007-250
KX65A9FA Monster Energy	2009	002-892	—	007-250
KX65ABF/ACF/ADF	11-13	002-892		007-250
KD80/A2	75-76	—	—	—
KD80N1/N2	88-90	—	—	007-282
KDX80A1/A2	80-81	—	—	007-250
KDX80B2/B3	82-83	—	—	007-250
KDX80C1/C2/C3/C4/C5	84-88	—	—	007-250
KX80A1	1979	—	—	007-250
KX80A2	1980	—	—	007-251
KX80C1/C2	81-82	—	—	007-251
KX80E1/E2/E3	83-85	—	—	007-251
KX80G1/G2	86-87	—	—	007-251
KX80J2	1987	—	—	007-251
KX80L1/L2/L3	88-90	—	018-885	018-406
KX80N1/N2/N3	88-90	—	018-885	018-406
KX80R1/R2/R3/R4/R5/R6/R7	91-97	—	018-885	018-406
KX80T1/T2/T3/T4 Big Wheel	91-94	—	018-885	018-406
KX80W1/W2/W3	98-00	—	018-885	018-406
KX85A1/A2/A3/A4/A5	01-05	—	018-885	018-406
KX85A6F/A7F/A8F/A9F	06-09	—	018-885	018-406
KX85A9FA Monster Energy	2009	—	018-885	018-406
KX85AAF/ABF/ACF/ADF	10-13	—	018-885	018-406
MC1/1A/1B90	73-74	—	—	007-988
MC1M/MC1MA-90	74-75	—	—	—
G31M-100	70-71	—	—	—
G4TR100AE	70-75	—	—	—
G5/A/B/G5C100	72-75	—	—	—
KD100M1/M2/M3/M4	76-79	—	—	—
KE100A5/A6/A7	76-79	—	—	—
KM100A1/A2/A3/A4	76-79	—	—	—
KX100B5/B6/B7	95-97	—	018-885	018-406
KX100C1/C2/C3	98-00	—	018-885	018-406
KX100D1/D2/D3/D4/D5	01-05	—	018-885	018-406
KX100D6F/D7F/D8F/D9F	06-09	—	018-885	018-406
KX100D9FA Monster Energy	2009	—	018-885	018-406
KX100DBF/DCF	10-12	—	018-885	018-406
KX100DCF	2012	—	018-885	018-406
KLX110A1-A4 KLX110R	02-05	—	—	021-884
KLX110A KLX110R	06-09	—	—	021-884
KLX110A9FA Monster Energy	2009	—	—	021-884
KLX110CAF/CBF/CCF KLX110R	10-12	—	—	021-884
KLX110DAF/DBF/DCF KLX110L	10-12	—	—	021-884
KLX125A1/A2/A3/A6F	03-06	—	—	—
KLX125B1/B2/B3/B6F	03-06	—	—	—
KX125/A/A3	74-76	007-955	—	—
KX125A4/A5/A6/A7	78-81	—	—	002-101
KX125B1/B2/C1/D1/E1/E2	82-87	007-959	—	002-700
KX125F1/G1	88-89	—	018-884	018-113
KX125H1/H2	90-91	—	018-884	018-113
KX125J1/J2	92-93	—	018-884	018-113
KX125K1/K2/K3/K4	94-97	—	018-884	018-113
KX125K5	1998	—	018-884	*021-872
KX125L1/L2	99-00	—	018-884	*021-872
KX125L3/L4	01-02	002-877	—	—
KX125M1/M2/M3	03-05	002-877	—	007-753
KLX140A8F/A9F	08-09	—	—	021-884
KLX140AAF (Canada)	2010	—	—	021-884
KLX140ABF/ACF	11-12	—	—	021-884
KLX140B8F/B9F KLX140L	08-09	—	—	021-884
KLX140BAF KLX140L (Canada)	2010	—	—	021-884
KLX140BBF/BCF KLX140L	11-12	—	—	021-884
F3-175 Bushwhacker	68-70	007-955	—	—
F7/F7A/F7B175 Enduro	71-73	007-955	—	—
KDX175A1/A2	80-81	—	—	002-101
KDX175A3	1982	007-959	—	002-700
KE175D2/D3/D4	80-82	—	—	007-251
KDX200A1/A2/A3	83-85	007-959	—	002-700
KDX200C1/C2	86-87	007-959	—	002-700

Needle Valve Sets, Needle Valves, Gaskets & O-Rings

Kawasaki Dual Sport & Offroad

Model	Year	Needle Valve Assy	Needle Valve	Float Bowl Gasket/O-Ring
KDX200C3	1988	—	018-884	018-113
KDX200E1-E6	89-94	—	018-884	018-113
KDX200H1-H11	95-05	—	018-884	018-113
KDX200H6F	2006	—	018-884	018-113
KDX220A4-A12	97-05	—	018-884	018-113
F4-250 Sidewinder	69-70	007-955	—	002-099
F11/A/B-250 Enduro	73-75	007-955	—	002-099
KE250B1/B2/B3	77-79	007-955	—	—
KDX250A1	1980	—	—	002-102
KDX250B1/B2/B3/B4	81-84	—	—	002-102
KDX250D1/D2/D3/D4	91-94	—	018-884	018-113
KL250A1/A1A/A2	78-79	—	018-880	021-889
KL250A3/A4/A5	80-82	—	—	007-991
KL250D2-D22 KLR250	85-05	—	018-880	021-887
KLX250D2/D3/D4 Offroad	94-96	—	018-880	021-887
KLX250H6F/H7F KLX250S	06-07	—	018-880	021-887
KLX250T9F/T9FL KLX250S	2009	—	018-880	021-887
KLX250TAF/TAFL KLX250S	2010	—	018-880	021-887
KLX250W9F/W9FL KLX250SF	2009	—	018-880	021-887
KLX250WAF/WAFL KLX250SF	2010	—	018-880	021-887
KX250A4/A5/A6/A7	78-81	—	—	002-102
KX250B1	1982	—	—	002-102
KX250C1/C2	83-84	—	—	002-102
KX250D1/D2	85-86	—	—	—
KX250E1	1987	—	—	002-102
KX250F1/G1	88-89	—	018-884	018-113
KX250H1/H2	90-91	—	018-884	018-113
KX250J1/J2	92-93	—	018-884	018-113
KX250K1/K2/K3/K4	94-97	—	018-884	018-113
KX250K5	1998	—	018-884	*021-872
KX250L1/L2/L3/L4	99-02	—	018-884	*021-872
KX250M1/M2	03-04	—	018-884	*021-872
KX250R1/R6F/R7F	05-07	—	018-884	*021-872
KX250N1/N2 (KX250F)	04-05	—	018-884	021-731
KX250T6F/T7F/T8F (KX250F)	06-08	—	018-884	021-731
KX250W9F/XAFB (KX250F)	09-10	—	018-884	021-731
KLX300A2-A10 Offroad	97-05	—	018-880	021-887
KLX300A6F	2006	—	018-880	021-887
F9/A/B/C-350	72-75	007-955	—	—
KLX400A1 KLX400SR Dual Sport	2003	—	—	007-756
KLX400B1 KLX400R w/FCR-H	2003	018-881	018-884	021-055
KX400/A2	7576	—	—	002-102
KDX400A1/A2	7980	—	—	002-102
KDX420B1	1981	—	—	002-102
KX420A1/A2	80-81	—	—	002-102
KDX450A1	1982	—	—	002-102
KLX450A8F/A9F	08-09	—	018-884	021-731
KX450D6F/D7F/D8F (KX450F)	06-08	—	018-884	021-731
KX500A1	1983	—	—	002-102
KX500A2	1984	007-959	—	002-700
KX500B1/B2	85-86	—	—	—
KX500C1	1987	—	—	002-102
KX500D1	1988	—	018-884	018-113
KX500E1-E16	89-04	—	018-884	018-113
KL600A1/B1/B2 KLR600	84-86	—	018-884	021-887
KL650A10-A19 KLR650	87-05	—	018-884	021-887
KL650A6F/A7F KLR650	06-07	—	018-884	021-887
KL650B2/B3 Tengai KLR650	90-91	—	018-884	021-887
KL650E8F/E9F KLR650	08-09	—	018-884	021-887
KL650EAF-EDF KLR650	10-13	—	018-884	021-887
KLX650A1/A2/A3 Offroad	93-95	—	018-884	021-887
KLX650C1C4 Dual Sport	93-96	—	018-884	021-887
KLX650D1 Offroad	1996	—	018-884	021-887

Suzuki Street

Model	Year	Needle Valve Assy	Needle Valve	Float Bowl Gasket/O-Ring
GN125Z/D	82-83	007-957	—	—
GN125EM-EV	91-97	007-957	—	—
GN250Z/D	82-83	007-970	—	007-991
GN250F	1985	007-970	—	007-991
GN250J	1988	007-970	—	007-991
GS250TT/TX	80-81	007-957	—	—
GT250K/L/M/A/B Hustler	73-77	007-966	—	002-099
GZ250X/Y	99-00	—	—	007-756
GZ250K1-K9	01-09	—	—	007-756
GZ250L0 Marauder	2010	—	—	007-756
GS300LZ/LD	82-83	007-957	—	—
GS300LF	1985	007-957	—	—
T350I/II Rebel	69-70	—	—	002-099
T350R/J Rebel	71-72	—	—	002-099
GT380K/L/M/A/B Sebring	73-77	—	—	002-099
DR-Z400SY-SK9 Dual Sport	00-09	—	—	007-756
DR-Z400SL1/SL2 Dual Sport	11-12	—	—	007-756
DR-Z400SM Supermotard	05-09	—	—	007-756
GN400T/XT/XX/TX/TX	80-82	—	—	007-991
GS400B/XB	1977	—	—	007-989
GSF400FM/FN/FP Bandit	91-93	—	—	021-876
GS450ED	1983	007-957	—	—
GS450GAZ/GAD Automatic	82-83	007-957	—	—
GS450GAF Automatic	1985	007-957	—	—
GS450LD	1983	007-957	—	007-990
GS450LF/LG/LH/LJ	85-88	007-957	—	007-990
GS450TXD	1983	007-957	—	007-990
GS500EK-EY	89-00	007-971K	—	021-876
GS500EK1/EK2	01-02	—	—	021-876
GS500FK4-FK9	04-09	—	—	007-756
GS500HK7/HK8/HK9 Naked	07-09	—	—	007-756
GT500A/B Titan	76-77	—	—	002-099
T500R/J/K/L/M Titan	71-75	—	—	002-099
GS550B/C/EC	77-78	007-966	—	007-994
GS550N/EN/LN	1979	007-966	—	007-994
GS550ET	1980	007-957	—	007-990
GS550ED/ESD	1983	—	—	—
GS550ES3/ESE/EF/ESF/ESG	83-86	—	—	—
GS550LT/LX/LZ	80-82	007-957	—	007-990
GS550LD	1983	—	—	—
GS550LF/LG	85-86	—	—	—
GS550MZ	1982	007-957	—	007-990
GS550TX	1981	007-957	—	007-990
GT550J Indy (marked 34013/34014)	1972	—	—	002-009
GT550J Indy (marked 34015)	1972	—	—	002-099
GT550K/L/M/A/B Indy	73-77	007-966	—	002-099
GSF600ST-SX Bandit	96-99	—	018-880	021-887
GSF600SY/SK1-SK3 Bandit	00-03	—	018-880	021-887
GSX600FJ/FK Katana	88-89	007-957	—	021-875
GSX600FL-FT Katana	90-96	—	—	021-876
GSX600FV Katana (49 state)	1997	—	—	021-876
GSX600FV Katana (Ca.)	1997	—	—	021-876
GSX600FW/FX/FY Katana	98-00	—	—	007-756
GSX600FK1-FK6 Katana	01-06	—	—	007-756
GSX-R600V/W/X/Y	97-00	—	—	021-877
GR650D/XD Tempter	1983	007-957	—	007-990
GS650EX/EZ	81-82	007-957	—	007-990
GS650GX/GZ/GD	81-83	007-957	—	007-990
GS650GLX/GLZ/GLD	81-83	007-957	—	007-990
GS650MD Katana	1983	007-957	—	007-990
Boulevard S40K5-K9 (LS650)	05-09	007-970	—	007-991
Boulevard S40L1/L2 (LS650	11-12	007-970	—	007-991
LS650FG/FH Savage	86-87	007-970	—	007-991
LS650PG/PH/PJ Savage	86-88	007-970	—	007-991
LS650PS-PK4 Savage	95-04	007-970	—	007-991
SV650X/Y/K1/K2	99-02	—	—	021-877
SV650SX/SY/SK1/SK2	99-02	—	—	021-877
GS700EF/ESF	1985	007-957	—	007-990
GV700GLF Madura	1985	007-957	—	—
GV700GLF2 Madura	1985	007-957	—	—
GS750B/C/EC	77-78	007-966	—	007-994
GS750N/EN/LN	1979	007-966	—	007-994

Needle Valve Sets, Needle Valves, Gaskets & O-Rings

Suzuki Street

Model	Year	Needle Valve Assy	Needle Valve	Float Bowl Gasket/O-Ring
GS750ET/EX/EZ	80-82	007-957	—	007-990
GS750ED/ESD	1983	007-957	—	007-990
GS750LT/LX	80-81	007-957	—	007-990
GS750TZ/TD	82-83	007-957	—	007-990
GS750SD Katana	1983	007-957	—	007-990
GSX750FK-FV Katana	89-97	—	—	021-876
GSX750FW/FX/FY Katana	98-00	—	—	007-756
GSX750FK1-FK6 Katana	01-06	—	—	007-756
GSX-R750G/H	86-87	007-957	—	021-875
GSX-R750RG	1986	007-957	—	021-875
GSX-R750J/K	88-89	—	—	021-876
GSX-R750L/M/N (49 state)	90-92	007-972K	—	021-876
GSX-R750L/M/N (Ca.)	90-92	—	—	021-876
GSX-R750WP/WR/WS (49 state)	93-95	007-972K	—	021-876
GSX-R750WP/WR/WS (Ca.)	93-95	—	—	021-876
GSXR750T/V	96-97	—	—	021-877
GT750J/K Lemans	72-73	—	—	002-099
GT750L/M/A/B Lemans	74-77	007-976	—	007-989
VL800K1/K2/K3/K4 Volusia	01-04	—	—	021-877
VL800ZK Volusia Limited Edition	01-05	—	—	021-877
VS800GLN/GLP/GLR Intruder	92-94	—	—	—
VS800GLS/GLT/GLV Intruder	95-97	—	—	—
VS800GLW/GLX/GLY Intruder	98-00	—	—	—
VS800GLK1/GLK2 Intruder	01-02	—	—	—
VX800L/M/N/P	90-93	—	—	—
VZ800V/W/X/Y Marauder	97-00	—	—	—
VZ800K1/K2 Marauder	01-02	—	—	—
GS850GN	1979	007-966	—	007-994
GS850GT/GX/GZ/GD	80-83	007-957	—	007-990
GS850GLT/GLX/GLZ/GLD	80-83	007-957	—	007-990
GS1000C/EC/N/EN	78-79	007-966	—	007-994
GS1000ET	1980	007-957	—	007-990
GS1000GT/GX	81-82	007-957	—	007-990
GS1000GLT/GLX	81-82	007-957	—	007-990
GS1000LN	1979	007-966	—	007-994
GS1000SN	1979	007-966	—	007-994
GS1000ST	1980	007-957	—	007-990
GS1000SZ Katana	1982	007-957	—	007-990
GS1100ET/EX/EZ/ED/ESD	80-83	007-957	—	007-990
GS1100GZ/GLZ/GD/GLD	82-83	007-957	—	007-990
GS1100GKZ/GK2/GKD/GKE	82-84	007-957	—	007-990
GS1100LT	1980	007-957	—	007-990
GS1100SD Katana	1983	007-957	—	007-990
GSX1100FJ-FP Katana	88-93	—	—	021-875
GSX1100GM/GN/GP Shaft	91-93	007-971K	—	021-876
GSX-R1100G/H/J	86-88	007-957	—	021-875
GSX-R1100K/L/M/N	89-92	—	—	021-876
GSX-R1100WP-WW	93-98	007-972K	—	021-876
GS1150ES3/ESE/EF/ESF	83-85	007-957	—	007-990
GS1150EF2/EG/ESG	85-86	007-957	—	007-990
GSF1200K1-K5 Bandit	01-05	—	—	007-756
GSF1200SAV Bandit S	1997	007-972K	—	021-876
GSF1200SV-SY Bandit S	97-00	007-972K	—	021-876
GSF1200SK1-SK5 Bandit S	01-05	—	—	007-756
GV1200GLF/GLG Madura	85-86	007-957	—	—
GV1200GLF2 Madura	1985	007-957	—	—
VL1500LCW-LCK4 Intruder LC	98-04	—	—	021-877

Suzuki ATV

Model	Year	Needle Valve Assy	Needle Valve	Float Bowl Gasket/O-Ring
LT185E/F/G/H Quadrunner	84-87	—	—	—
LT230EH/EJ/EK/EL Quadrunner	87-90	—	—	—
LT230EM/EN/EP Quadrunner	91-93	—	—	—
LT230GEF/GEG Quadrunner	85-86	—	—	—
LT230SF/SG/SH/SJ Quadsport	85-88	—	—	—
LT-F230G/H	86-87	—	—	—
LT250EFF/EFG Quadrunner	85-86	—	—	—
LT250RF/RG Quadracer	85-86	007-959	—	002-700
LT250RH/RJ/RK Quadracer	87-89	007-959	—	002-700
LT250RL/RM/RN Quadracer	90-92	007-959	—	002-700
LT250SK/SL Quad Sport	89-90	—	—	—
LT-F250FX/FY/FK1/FK2	99-02	007-959	—	—

Suzuki ATV

Model	Year	Needle Valve Assy	Needle Valve	Float Bowl Gasket/O-Ring
LT-F250FX Quad Runner 4WD	1999	007-957	—	021-875
LT-F250FY Quad Runner 4WD	2000	—	—	007-756
LT-F250FK1/FK2 Quad Runner 4WD	01-02	—	—	007-756
LT-F250J/K Quad Runner 2WD	88-89	007-957	—	—
LT-F250L/M/N/P Quad Runner 2WD	90-93	007-957	—	—
LT-F250R-X Quad Runner 2WD	94-99	007-957	—	—
LT-F250Y/K1 Quad Runner 2WD	00-01	—	—	007-756
LT-Z250K4-K9 Quad Sport Z250	04-09	—	—	007-756
LT-4WDH/WDJ/WDK 4x4	87-89	007-967	—	—
LT-4WDL/M/N/P/R/S/T 4x4	90-96	007-957	—	—
LT-300EH/EJ/EK Quadrunner	87-89	—	—	—
LT-300EH/EJ/EK Quadrunner	87-89	—	—	—
LT-F300FX King Quad 4WD (Ca.)	1999	—	—	021-875
LT-F300FX King Quad 4WD 49 state	1999	007-957	—	021-875
LT-F300FY/FK1/FK2 King Quad 4WD	00-02	—	007-756	
LT-F4WDXM/N/P/R King Quad 300	91-94	—	—	—
LT-F4WDXS/T/V/W King Quad 300	95-98	—	—	—
LT-F4WDV/WDW	97-98	—	—	—
LT-A400FK2/FK3 Eiger Auto 4WD	02-03	—	018-884	021-887
LT-A400FK4/FK5 Eiger Auto 4WD	04-05	—	—	021-887
LT-A400FCK3 Eiger Auto 4WD	2003	—	—	021-887
LT-A400FCK4 Eiger Auto 4WD	2004	—	—	021-887
LT-A400K2-K5 Eiger Auto 2WD	02-05	—	—	021-887
LT-F400FK2/FK3/FK4 Eiger 4WD	02-04	—	—	021-887
LT-F400K2/K3/K4/K5 Eiger 2WD	02-05	—	—	021-887
LT-400K2/K3 Eiger 2WD	02-03	—	—	021-887
LT-Z400K3/K4/K5/K6 Quad Sport	03-06	—	—	007-756
LT-A500FK2/FK3 Vinson 4WD	02-03	—	018-884	021-887
LT-A500FK4/FCK4 Vinson 4WD	2004	—	018-884	021-887
LT-F500FK3 Vinson Manual 4WD	2003	—	018-884	021-887
LT-F500FK4 Vinson Manual 4WD	2004	—	018-884	021-887
LT500RH/RJ/RK/RL Quadzilla	87-90	007-959	—	002-700

Suzuki Dual Sport & Offroad

Model	Year	Needle Valve Assy	Needle Valve	Float Bowl Gasket/O-Ring
RM60K3/K4	03-04	007-955	—	007-250
RM65K3/K4/K5	03-05	002-892	—	007-250
DS80D-Y	83-00	—	—	007-282
RM80T/X/Z/D/E/F	80-85	—	—	007-251
RM80G/H/J/K	86-89	—	—	007-251
RM80L-K1	90-01	—	—	—
RM85K2/K3/K4/K5/K6/K7/K8	02-08	—	018-885	018-406
RM85LK3-LK8	03-08	—	018-885	018-406
RV90J/K/L/M/A/B Rover	72-77	—	—	007-282
DR100D/E/F/G/H/J/K/L	83-90	007-967	—	—
RM100K3	2003	—	018-885	018-406
SP100D	1983	007-967	—	—
TS100C/N/T/X	78-81	007-966	—	002-009
DR-Z110K3/K4/K5	03-05	—	—	021-884
DR125G/H/J	86-88	007-967	—	—
DR125SER-SET Dual Sport	94-96	007-957	—	021-875
DR-Z125K3-K9	03-09	—	—	—
DR-Z125LK3-LK9	03-09	—	—	—
RM125E/F/G	84-86	007-959	—	002-700
RM125H (up to engine no.106550)	1987	007-959	—	002-700
RM125H	1987	007-959	—	—
RM125J/K/L/M/N/P	88-93	002-466	—	002-484
RM125R/S/T/V/W	94-98	—	018-884	018-113
RM125X/Y	99-00	—	018-884	*021-872
RM125K1-K8	01-08	007-954	—	007-753
SP125G/H/J	86-88	007-967	—	—
TC125K/L/M/A/B Prospector	73-77	—	—	002-009
TS125R/J/K/L/M/A/B Duster	71-77	—	—	002-009
TS125C/N/T/X	78-81	007-966	—	002-009
DS185C/N/T	78-80	—	—	007-251
TC185L/M/A/B/C/N Ranger	74-77	—	—	002-009
TS185R/J/K/L/M Sierra	71-75	—	—	002-009
TS185A Sierra	1976	—	—	007-251
TS185B/C/N	77-79	—	—	007-251

Needle Valve Sets, Needle Valves, Gaskets & O-Rings

Suzuki Dual Sport & Offroad

Model	Year	Needle Valve Assy	Needle Valve	Float Bowl Gasket/O-Ring
DR200G/H/J Offroad	86-88	007-502	—	007-508
DR200SET-SEK9 Dual Sport	96-09	007-957	—	021-875
SP200G/H/J Dual Sport	86-88	007-957	—	021-875
DR250L/M/N/P Offroad	90-93	007-502	—	007-508
DR250SL-SER Dual Sport	90-95	007-971K	—	021-876
DR-Z250K1-K7 Offroad 49 state	01-07	007-502	—	007-508
DR-Z250K1-K7 Offroad (Ca.)	01-07	—	—	007-756
PE250B/C/N	77-79	—	—	002-102
RL250L/M Trials Exacta	74-75	—	—	007-099
RM250A/B/C/C2/N/T	76-80	—	—	002-102
RM250Z/D/E/F/G	82-86	007-959	—	002-700
RM250H	1987	007-959	—	—
RM250J/K/L/M/N	88-92	002-466	—	002-484
RM250P/R/S/T	93-96	—	018-883	018-113
RM250V	1997	—	018-884	018-113
RM250W/X/Y	98-00	—	018-884	*021-872
RM250K1-K8	01-08	—	018-884	*021-872
RM250ZK6	2006	—	018-884	*021-872
RMX250K/L/M/N	89-92	002-466	—	002-484
RMX250P/R/S/T/V/W	93-98	—	018-884	018-113
RM-Z250K4-L0	04-10	—	018-884	021-731
SP250Z/D Dual Sport	82-83	—	—	007-991
SP250F Dual Sport	1985	—	—	007-991
TS250R/J/K/L/M Savage	71-75	007-966	—	002-099
DR350L/M/N/P/R/S/T Offroad	90-96	007-502	—	007-508
DR350V/W/X 49 state	97-99	007-502	—	007-508
DR350V/W/X (Ca.)	97-99	007-971K	—	021-876
DR350SL-SEX Dual Sport	90-99	007-971K	—	021-876
RM370A/B	76-77	—	—	002-102
RM400C/N/T	78-80	—	—	002-102
DR-Z400EY Offroad	2000	018-881	018-884	021-055
DR-Z400EK1/EK2/EK3 Offroad	01-03	018-881	018-884	021-055
DR-Z400EK4-EK7 Offroad 49 state	04-07	018-881	018-884	021-055
DR-Z400EK4-EK7 Offroad (Ca.)	04-07	—	—	007-756
DR-Z400Y/K1/K2/K3 Offroad	00-03	018-881	018-884	021-055
DR-Z400K4/K5/K6 Offroad 49 state	04-06	018-881	018-884	021-055
DR-Z400K4/K5/K6 Offroad (Ca.)	04-06	—	—	007-756
DR-Z400SY-SK9 Dual Sport	00-09	—	—	007-756
DR-Z400SL1/SL2 Dual Sport	11-12	—	—	007-756
DR-Z400SM Supermotard	05-09	—	—	007-756
SP400T Dual Sport	1980	007-502	—	007-991
TS400L/M/A/B Apachie	74-77	—	—	002-099
RM-Z450K5/K6/K7	05-07	—	018-884	021-731
RM465Z	1982	007-959	—	002-700
DR500X/Z/D	81-83	—	—	007-996
RM500D/E	83-84	007-959	—	002-700
SP500X/Z/D Dual Sport	81-83	007-970	—	007-991
SP600F Dual Sport	1985	007-970	—	007-991
DR650SL-SEY Dual Sport	90-00	—	—	021-876
DR650SEK1-SEK9 Dual Sport	01-09	—	—	021-876
DR650SEL1/SEL2 Dual Sport	11-12	—	—	021-876

Triumph Street

Models using Mikuni BS Carbs		—	—	021-876
Models using Keihin CVK Carbs		—	018-884	021-887

Yamaha Street

RS100B/C	75-76	—	—	007-250
TA125 Road Racer (2-stroke)	1975	007-955	—	002-361
TZ125G Road Racer (2-stroke)	1980	007-961	—	—
TZ125/M Road Racer (2-stroke)	99-00	—	018-884	*021-872
YAS1C-125	1968	—	—	007-282
YCS1/YCS1C-180	1968	—	—	007-282
XC180DN/DNC Riva 180	1985	007-503	—	—
XC180K/KC/L/LC/N/NC Riva 180	83-85	007-503	—	—
XC180ZL/ZLC/ZN/ZNC Riva 180	84-85	007-503	—	—
DS6C/DS6B-250	69-70	007-958	—	002-009
DS7-250	1972	007-958	—	002-361
RD250/A/B	73-75	007-955	—	007-995

Yamaha Street

Model	Year	Needle Valve Assy	Needle Valve	Float Bowl Gasket/O-Ring
SR250G/H/J Exciter	80-82	007-503	—	007-990
SR250TH Exciter II	1981	007-503	—	007-990
TZ250H/J Road Racer (2-stroke)	81-82	007-962	—	002-102
XV250U/UC/W/WC Route 66	88-89	—	—	—
XV250A/AC Route 66	1990	—	—	—
XV250G/GC-L/LC Route 66	95-99	—	—	—
XV250P/PC/R/RC Virago 250	02-03	—	—	—
XV250S/SC/T/TC Virago 250	04-05	—	—	—
YDS5-250	1967	—	—	002-009
YM2C-305	1967	—	—	002-009
R3-350	1969	—	—	—
R5/R5B/R5C-350	70-72	007-958	—	002-361
RD350/A/B-350	73-75	007-955	—	007-995
RZ350L/N/NC/NCII	84-85	—	—	007-250
TZ350 Road Racer (2-stroke)	1974	007-961	—	—
XS360C/D/2D	76-77	007-976	—	007-989
FZR400U/SUC/W/SWC/A/SAC	88-90	—	—	—
RD400C/D/E/F	76-79	007-955	—	007-995
XS400D/E/2E/F/2F	77-79	007-976	—	007-991
XS400G/H Special II	80-81	007-503	—	007-990
XS400SG/SH Special	80-81	007-503	—	007-990
XS400SJ Heritage Special	1982	007-503	—	007-990
XS400J Maxim	1982	007-957	—	—
XS400K Maxim	1983	—	—	—
XS400RJ Seca	1982	007-957	—	—
XS400RK Seca	1983	—	—	—
SR500E/F	78-79	—	—	007-996
SR500G/H	80-81	—	—	—
TX500/A	73-74	—	018-880	021-889
XS500B	1975	—	018-880	021-889
XS500C/D	76-77	007-958	—	007-989
XS500E	1978	007-976	—	007-991
XT500E/F Dual Sport	78-79	—	—	007-996
XV535A/AC Virago	1990	—	—	—
XV535E/EC-L/LC Virago	93-99	—	—	—
XV535SF/SFC-SJ/SJC Virago	94-97	—	—	—
XJ550H/J/K Maxim	81-83	007-503	—	007-998
XJ550RH/RJ/RK Seca	81-83	—	007-998	
XZ550RJ Vision	1982	—	—	—
XZ550RK Vision	1983	007-957	—	—
FJ600L/LC/N/NC	84-85	007-503	—	—
FZ600S/SC/T/TC/U/UC	86-88	007-504	—	007-998
FZR600W/WC/AC	89-90	—	—	—
FZR600RA/RAC-RL/RLC	90-99	—	—	—
XJ600SD/SDC-SK/SKC Seca II	92-98	—	—	—
SRX600S/SC	1986	—	—	—
YX600S/SC-A/AC Radian	86-90	007-504	—	007-998
YZF600RG/RGC-RV	95-07	018-882	018-880	021-888
YZF-R6L/LC-P/PC	99-02	—	018-880	—
YZF-R6SN/SNC Champions L.E.	2001	—	018-880	—
XJ650G/H/J/K Maxim	80-83	026-302	—	026-320
XJ650LH Midnight Maxim	1981	026-302	—	026-320
XJ650LJ/LK Seca Turbo	82-83	—	—	—
XJ650RJ Seca	1982	026-302	—	026-320
XS1-650	1970	007-955	—	007-989
XS1B-650	1971	007-955	—	007-989
XS2-650	1972	007-958	—	007-989
TX650/A	73-74	007-958	—	007-989
XS650B/C/D/E/F	75-79	007-958	—	007-989
XS6502F	1979	007-958	—	007-989
XS650SE/SF Special	78-79	007-958	—	007-989
XS650G/H Special II	80-81	007-503	—	007-990
XS650SG/SH Special	80-81	007-503	—	007-990
XS650SJ/SK Heritage Special	82-83	007-503	—	007-990
FZ700T/TC	1987	—	—	—
FZX700S/SC/T/TC	86-87	—	—	—
XJ700N/NC Maxim (Hitachi)	1985	026-302	—	026-320
XJ700S/SC Maxim (Hitachi)	1986	026-302	—	026-320
XJ700XN/XNC Maxim X (Mikuni)	1985	007-504	—	—
XJ700XS/XSC Maxim X (Mikuni)	1986	007-504	—	—
FZ750N/S/SC	85-86	—	—	—
FZ750U/UC	1988	—	—	—

Needle Valve Sets, Needle Valves, Gaskets & O-Rings

Yamaha Street

Model	Year	Needle Valve Assy	Needle Valve	Float Bowl Gasket/O-Ring
FZR750RT/RU	87-88	—	—	—
TX750/A	73-74	007-958	—	007-989
TZ750A Road Racer (2-stroke)	1974	007-962	—	—
TZ750D Road Racer (2-stroke)	1977	007-962	—	—
XJ750J/K Maxim	82-83	026-302	—	026-320
XJ750MK Midnight Maxim	1983	026-302	—	026-320
XJ750RH/RJ/RK Seca	81-83	026-302	—	026-320
XS750D/2D	1977	007-976	—	007-989
XS750E/F	78-79	007-976	—	007-991
XS750SE/SF Special	78-79	007-976	—	007-991
XV750H/J/K Virago	81-83	026-302	—	026-322
XV750MK Midnight Virago	1983	026-302	—	026-322
XV750U/UC-G/GC Virago	88-95	007-980	—	—
XV750H1/HC1/J1/JC1 Virago	96-97	007-980	—	—
XV750K1/KC1 Virago	1998	007-980	—	—
XS850G/H	80-81	026-300	—	026-326
XS850LG/LH Midnight Special	80-81	026-300	—	026-326
XS850SG/SH Special	80-81	026-300	—	026-326
XJ900RK Seca	1983	—	—	—
XV920J Virago	1982	026-302	—	026-322
XV920K Virago	1983	026-302	—	026-324
XV920MK Midnight Virago	1983	026-302	—	026-324
FZ1000S/SC/T/TC FZ1	04-05	—	—	007-756
FZ1000S1S FZ1	2004	—	—	007-756
FZR1000T/TC/U/UC	87-88	—	—	—
FZR1000W/W-F/FC	89-94	—	—	—
FZS1000N/NC-T/TC FZ1	01-05	—	—	007-756
FZS1000SPR/SPRC FZ1	2003	—	—	007-756
XV1000L/LC/N/NC Virago 1000	84-85	026-302	—	026-324
YZF-R1K/KC-N/NC YZF-R1	98-01	—	—	021-877
YZF1000RK/RKC YZF-R1	1998	—	—	021-877
YZF-R1SN/SNC YZF-R1	2001	—	—	021-877
FJ1100L/LC/N/NC	84-85	007-504	—	—
XJ1100J Maxim	1982	007-503	—	007-990
XS1100E/F	78-79	007-976	—	007-991
XS1100G/H	80-81	007-503	—	007-990
XS1100LG/LH Midnight Special	80-81	007-503	—	007-990
XS1100SF Special	1979	007-976	—	007-991
XS1100SG/SH Special	80-81	007-503	—	007-990
XV1100S/SC/T/TC Virago 1100	86-87	026-302	—	026-324
XV1100U/UC-L/LC Virago 1100	88-99	007-980	—	—
XVS1100A V-Star 1100 Classic	99-09	—	—	007-756
XVS1100 V-Star 1100 Custom		—	—	007-756
XVS1100T/V V-Star 1100 Custom		—	—	007-756
XVS1100T V-Star Midnight Custom	—	—	007-756	
XVS1100A V-Star 1100 Silverado		—	—	007-756
FJ1200S/SC/T/TC	86-87	007-504	—	—
FJ1200W/WC/A/AC	89-90	007-980	—	—
FJ1200B/BC/D/DC	91-92	007-980	—	—
FJ1200AD/ADC/AE/AEC (ABS)	92-93	007-980	—	—
VMX12N/NC-W/W1 V-Max	85-07	—	—	—
XVZ13 Venture & Venture Royale	86-93	—	—	—
XVZ13 Venture & Venture Royale	86-93	—	—	—
XVZ13AH/AHC Royal Star	1996	007-980	—	—
XVZ13ATH/ATHC Royal Star Tour	96-98	007-980	—	—
XVZ13AL/ALC-AN/ANC	99-01	007-980	—	—
XVZ1300C Midnight Tour Deluxe	06-07	—	—	021-877
XVZ1300TF Royal Star Midnight Venture	02-07	—	—	021-877
XVZ1300CT Royal Star Tour Deluxe	05-09	—	—	021-877
XVZ1300C Royal Star Tour Deluxe S	08-10	—	—	021-877
XVZ1300TF Royal Star Venture	99-09	—	—	021-877
XVZ1300TF Royal Star Venture MM	2000	—	—	021-877
XVZ1300TFSM Royal Star Venture MM	2000	—	—	021-877
XVZ1300TFS Royal Star Venture S	08-12	—	—	021-877
XV1600ALE Road Star L.E.	2003	—	—	007-756
XV1600ALM Road Star	99-03	—	—	007-756
XV1600ASM Road Star MM Limited	2000	—	—	007-756
XV1600AS Midnight Star	01-03	—	—	007-756

Yamaha Street

Model	Year	Needle Valve Assy	Needle Valve	Float Bowl Gasket/O-Ring
XV1600ATL Road Star Silverado L.E.	2003	—	—	007-756
XV1600AT Road Star Silverado	99-03	—	—	007-756
XV1700A Road Star Midnight	04-07	—	—	007-756
XV1700A Road Star Silverado	04-07	—	—	007-756
XV1700A Road Star	04-07	—	—	007-756
XV1700AT Road Star Silverado	04-07	—	—	007-756

Yamaha ATV

Model	Year	Needle Valve Assy	Needle Valve	Float Bowl Gasket/O-Ring
YFA1W Breeze Moto-4	1989	—	—	007-999
YFA1B-YFA1H Breeze Moto-4	91-96	—	—	007-999
YFA1J-YFA1S/SC Breeze Moto-4	97-04	—	—	007-999
YFM125S/GT/GV Grizzly 125	04-06	—	—	007-999
YFM125GHT Grizzly 125 Hunter	2005	—	—	007-999
YFM125RAL/RAW Raptor 125	2011	—	—	007-756
YT125G/H/J/K/L/N Tri-Moto	80-85	—	—	007-250
YT175J/K Tri-Moto	82-83	—	—	007-250
YFM200N Moto-4	1985	—	—	007-999
YFM200DXS-DXW Moto-4	86-89	—	—	007-999
YFS200U-V/SEV Blaster	88-06	007-979	—	007-250
YTM200K/L/N Tri-Moto	83-84	—	—	007-999
YTM200N Tri-Moto	1985	—	—	007-999
YTM200EK/EL/ERN Tri-Moto	83-85	—	—	007-999
YFM225S/T/U Moto-4	86-88	—	—	007-999
YTM225DRN/DRS Tri-Moto	85-86	—	—	007-999
YTM225DXK/DXL/DXN Tri-Moto	83-85	—	—	007-999
YFU1TW/YFU1W Pro-Hauler	1989	—	—	007-999
YFB250D/E/F/G/H Timberwolf	92-96	—	—	007-999
YFB250FWF/FWG Timberwolf	94-95	—	—	007-999
YFB250FWH/FWJ Timberwolf	96-97	—	—	007-999
YFB250FWK-FWM Timberwolf	98-00	—	—	007-999
YFB250UH/UJ/UK Timberwolf	96-98	—	—	007-999
YFM250BT/BV Bruin 250	05-06	—	—	007-756
YFM250W/A/B Moto-4	89-91	—	—	007-756
YFM250BW/BX Big Bear 250	07-08	—	—	007-756
YFM250BYBig Bear 250	2009	—	—	007-756
YFM250RSP2X Raptor 250 S.E.II	2008	—	—	007-756
YFM250RSPX Raptor 250 S.E.	2008	—	—	007-756
YFM250RX/RXGY/RXL Raptor 250	2008	—	—	007-756
YFM250RSE2Y Raptor 250	2009	—	—	007-756
YFM250RSEY Raptor 250	2009	—	—	007-756
YFM250RYL/RYW/RZW Raptor 250	09-10	—	—	007-756
YFM250RAL/RAW Raptor 250	2011	—	—	007-756
YFM250RSPA Raptor 250 S.E.	2011	—	—	007-756
YFM350AS Bruin 350 Auto 2WD	2004	—	—	007-756
YFM350BA Bruin 2WD	05-06	—	—	007-756
YFM350FAHS Bruin 350 Auto 4x4	2004	—	—	007-756
YFM350FA Bruin 4WD Hunter	04-06	—	—	007-756
YFM350FG Grizzly 350 4WD	09-11	—	—	007-756
YFM350FGI Grizzly 350 IRS	07-11	—	—	007-756
YFM350FG Grizzly 350 4WD	07-10	—	—	007-756
YFM350G Grizzly 350 2WD	07-11	—	—	007-756
YFM350R Raptor 350	04-11	—	—	007-756
YFM350X Wolverine 350 2WD	06-09	—	—	007-756
YFM350AS Bruin 350 Auto 2WD	04-05	—	—	—
YFM350BAT Bruin 350 2WD	2005	—	—	—
YFM350ERD-ERG Moto-4	92-95	007-977K	—	—
YFM350ER Moto-4	87-90	007-977K	—	—
YFM350FAHS Bruin 350 Auto	04-05	—	—	—
YFM350FAS Bruin 350 Auto 4x4	2004	—	—	—
YFM350FAT Bruin 350 Auto 4x4	2005	—	—	—
YFM350FWBJ Big Bear 4WD	1997	—	—	021-875
YFM350FWT-FWJ Big Bear	87-97	007-977K	—	—
YFM350FXG Wolverine	1995	007-977K	—	—
YFM350FXH-FXT Wolverine	96-05	—	—	021-875
YFM350S/RT Raptor 350	04-05	—	—	—
YFM350UH/UJ/UK Big Bear 2WD	96-98	007-977K	—	—

Needle Valve Sets, Needle Valves, Gaskets & O-Rings

Yamaha ATV

Model	Year	Needle Valve Assy	Needle Valve	Float Bowl Gasket/O-Ring
YFM350UL Big Bear 2WD	1999	—	—	—
YFM350XT-XS/XSC Warrior	87-04	007-977K	—	—
YFP350U Terrapro	1988	007-977K	—	—
YFZ350T-V/SEV Banshee	87-06	007-978K	—	007-250
YFM400FWE-FWK Kodiak 4WD	93-98	007-977K	—	—
YFM400AR/AS Kodiak 400 2WD	03-04	—	—	—
YFM400FAR/FAS Kodiak 400 4WD	03-04	—	—	—
YFM400A Kodiak 2WD	00-01	—	—	007-756
YFM400A Kodiak 2WD	03-04	—	—	007-756
YFM400FA Kodiak 4WD	00-06	—	—	007-756
YFM400FB Big Bear 400 4WD	07-11	—	—	007-756
YFM400FGHW Grizzly 400 Hunter	2007	—	—	007-756
YFM400FG Grizzly 400 4WD Hunter	2008	—	—	007-756
YFM400FGW Grizzly 400	2007	—	—	007-756
YFM400FGX Grizzly 400 4WD	2008	—	—	007-756
YFM400FHM Big Bear Buckmaster	2000	—	—	007-756
YFM400FHM Big Bear Buckmaster	2000	—	—	007-756
YFM400FHMC Grizzly Real Tree	2000	—	—	007-756
YFM400 Big Bear 2WD	00-04	—	—	007-756
YFM400F Big Bear 4WD	00-06	—	—	007-756
YFM400FBX Big Bear 400 4WD	2008	—	—	007-756
YFM450FA Kodiak 450 4WD	03-06	—	—	007-756
YFM450FGHW Grizzly 450 Hunter	07-10	—	—	007-756
YFM450FG Grizzly 450 4WD	07-11	—	—	007-756
YFM450FX Wolverine 450 4WD	07-10	—	—	007-756
YFZ450S/T/V/W	04-07	—	018-884	021-731
YFZ450BB Bill Ballance Edition	06-07	—	018-884	021-731
YFZ450LES Limited Edition	2004	—	018-884	021-731
YFZ450SET Special Edition	2005	—	018-884	021-731
YFZ450SPV/SEW/SPX S.E.	06-08	—	018-884	021-731
YFZ450SE2W/SP2X S.E. II	07-08	—	018-884	021-731
YFZ450WB	2007	—	018-884	021-731
YFZ450XL/XGY	2008	—	018-884	021-731
YFZ450YL/YW	2009	—	018-884	021-731
YFM600FW Grizzly 600	98-00	—	—	021-876
YFM600FWHM Grizzly Real Tree	2000	—	—	021-876
YFM600F Grizzly RealTree Hunter	2001	—	—	021-876
YFM600FN Grizzly	2001	—	—	021-876
YFM660F Grizzly 660	02-08	—	—	007-756
YFM660FA Grizzly 660 SE	05-06	—	—	007-756
YFM660F Grizzly 660 Hunter	05-08	—	—	007-756
YFM660R Raptor 660R	01-05	—	—	007-756
YFM660RL Raptor L.E.	03-04	—	—	007-756
YFM660RSET Raptor 660 SE	2005	—	—	007-756

Yamaha Side x Side

YXR450F Rhino 450	07-09	—	—	007-756
YXR450FAHV Rhino 450 Real Tree	2006	—	—	007-756
YXR450FAVGR Rhino 450 4WD	2006	—	—	007-756
YXR450FH Rhino 450 Hunter	07-09	—	—	007-756
YXR450FS Rhino 450 S.E.	07-08	—	—	007-756
YXR660FA Rhino 660 4WD	04-07	—	—	007-756

Yamaha Dual Sport & Offroad

Model	Year	Needle Valve Assy	Needle Valve	Float Bowl Gasket/O-Ring
YZ50G	1980	—	—	007-250
YZ60H/J/K	81-83	007-955	—	007-250
YZ80B	1975	—	—	007-250
YZ80C/D/E/F/G/H/J/K/L	76-84	007-955	—	007-250
YZ80N/S/T/U/W/A/B/D/E1	85-93	007-955	—	007-250
YZ80F1/G1/H1/J1/K1/L/M1/N1	94-01	007-955	—	007-250
YZ85P/R/S/T/V/W1/X/Y/Z/A/B	02-12	—	018-885	018-406
DT100A/B/C/D/E/F/G/H/J/K	74-83	—	—	007-250
MX100A/B	74-75	007-955	—	007-995
MX100C	1976	007-963	—	002-103
MX100F/G/H/J/K	79-83	—	—	007-250
RT100A	1990	—	—	007-250
RT100D-M	92-00	—	—	007-250
YZ100C/D/E/F/G/H/J/K	76-83	007-963	—	002-103
AT1E/AT1B/AT1C-125	69-71	—	—	002-009
AT1M/AT1MB/AT1MX-125	69-71	007-955	—	002-009
AT2M/ATMX-125	72-73	007-955	—	002-009
AT2/AT3-125 Enduro	72-73	007-955	—	007-250
DT125A/B/C Enduro	74-76	—	—	007-250
DT125E/F/G/H Enduro	78-81	—	—	007-250
IT125G/H	80-81	007-963	—	002-103
MX125A/B	74-75	007-955	—	007-995
MX125C	1976	007-963	—	002-103
TT125RM/RMC	2000	—	—	007-999
TT-R125M/MC-S	00-04	—	—	007-999
TT-R125ES	2004	—	—	007-999
TT-R125EV/EW/EX/EY	06–09	—	—	007-999
TT-R125LM/LWM-LEY	00-09	—	—	007-999
TT-R125LEA	2011	—	—	007-999
YZ125A/B	74-75	007-955	—	002-361
YZ125C	1976	007-963	—	002-103
YZ125X	1976	007-961	—	—
YZ125D/E/F/G/H/J	77-82	007-961	—	—
YZ125K/L	83-84	007-961	—	002-102
YZ125N	1985	007-961	—	—
YZ125S/T/U	86-88	007-961	—	—
YZ125W/A/B/D/E1/F1	89-94	002-466	—	002-484
YZ125G1/H1/J1/K1	95-98	002-877	—	—
YZ125L/M/N/P/R/S/T1/V/W1	99-07	002-877	—	007-753
YZ125X1/Y/Z/A1/B1	08-12	002-877	—	007-753
CT1/CT1B/CT1C-175 Enduro	69-71	007-958	—	002-009
CT2/CT3-175 Enduro	72-73	007-955	—	007-250
DT175A/B/C Enduro	74-76	—	—	007-250
DT175E/F/G/H Enduro	78-81	—	—	007-250
IT175D/E/F/G/H/J/K	77-83	007-961	—	—
MX175A/B	74-75	007-955	—	007-995
MX175F/G/H	79-81	—	—	007-250
TY175B/C Trials	75-76	—	—	007-250
YZ175C	1976	007-961	—	—
RT180A-K	90-98	—	—	007-250
IT200L/N/S	84-86	007-961	—	—
TT-R225L/LC/M/MC/N/NC	99-01	—	—	021-875
TT-R225P/PC/R/RC/S/SC	02-04	—	—	021-875
XT225D/DC-W/WC Serow	92-07	—	—	021-875
DT1-250 Enduro	1968	007-958	—	002-009
DT1B/DT1C-250 Enduro	69-70	—	—	002-009
DT1E-250 Enduro	1971	—	—	002-009
DT1S-250 Enduro	1969	—	—	002-009
DT1C-MX250	1970	—	—	002-009
DT1E-MX250	1971	—	—	002-009
DT2MX-250	1972	007-961	—	002-101
DT2/DT3-250 Enduro	72-73	—	—	002-009
DT250A	1974	007-955	—	—
DT250B/C/D	75-77	007-955	—	007-995
DT250E	1978	007-963	—	007-995
IT250D/E/F	77-79	007-961	—	002-102
IT250G/H/J/K	80-83	007-962	—	002-102
MX250/A	73-74	007-961	—	002-101
MX250B	1975	007-961	—	002-102
TY250C/D Trials	76-77	—	—	007-250
WR250ZB	1991	002-466	—	002-484
WR250ZD/ZE/ZF/ZG/ZH/ZJ	92-97	007-960	—	002-102

Needle Valve Sets, Needle Valves, Gaskets & O-Rings

Yamaha Dual Sport & Offroad

Model	Year	Needle Valve Assy	Needle Valve	Float Bowl Gasket/O-Ring
WR250FA	2011	———	018-884	021-731
YZ250FN/FP (YZ250F)	01-02	018-881	018-884	021-731
YZ250FR-FX (YZ250F)	03-08	———	018-884	021-731
YZ250FSPV 50Th Anniversary	2006	———	018-884	021-731
YZ250FYL/FYW (YZ250F)	2009	———	018-884	021-731
YZ250FZL/FZW (YZ250F)	2010	———	018-884	021-731
YZ250FAB/FAL (YZ250F)	2011	———	018-884	021-731
YZ250FBL/FBW (YZ250F)	2012	———	018-884	021-731
YZ250A	1974	007-961	———	002-101
YZ250B	1975	007-961	———	———
YZ250C/D	76-77	007-961	———	002-102
YZ250E/F/G/H	78-81	007-960	———	002-102
YZ250J/K/L/M/S/T/U	82-88	007-960	———	002-102
YZ250W/A/B/D/E1/F1	89-94	002-466	———	002-484
YZ250G1/H1/J1/K1	95-98	———	018-884	018-113
YZ250L1/M1/N1/P/R/S1/T1/V	99-06	———	018-884	*021-872
YZ250W1/X/X1/Y/Z/A1/B2	07-12	———	018-884	*021-872
YZ250WRW/WRA	89-90	002-466	———	002-484
DT360A Enduro	1974	007-955	———	———
MX360/A	73-74	007-961	———	002-101
RT1/RT1B-360 Enduro	70-71	007-961	———	002-009
RT2/RT3-360 Enduro	72-73	007-961	———	002-009
RT1M/RT1MX-360	70-71	007-961	———	002-009
RT2MX-360	1972	007-961	———	002-101
YZ360A	1974	007-961	———	002-101
YZ360B	1975	007-961	———	———
IT400C/D/E/F	76-79	007-960	———	002-102
MX400B	1975	007-960	———	002-102
YZ400C/D/E/F	76-79	007-960	———	002-102
WR400FK/FL	98-99	018-881	018-884	021-055
WR400FM	2000	018-881	018-884	021-731
YZ400FK/FL (YZ400F)	98-99	018-881	018-884	021-055
IT425G	1980	007-960	———	002-102
WR426FN/FP	01-02	018-881	018-884	021-731
YZ426FM/FN/FP (YZ426F)	00-02	018-881	018-884	021-731
WR450FR-FY	03-09	———	018-884	021-731
WR450FA	2011	———	018-884	021-731
YZ450FR-FX (YZ450F)	03-08	———	018-884	021-731
YZ450FSPV 50Th Anniversary	2006	———	018-884	021-731
YZ450FXL/FXW (YZ450F)	2008	———	018-884	021-731
YZ450FYL/FYW (YZ450F)	2009	———	018-884	021-731
IT465H/J	81-82	007-960	———	002-102
YZ465G/H	80-81	007-960	———	002-102
IT490K/L	83-84	007-960	———	002-102
YZ490J/K/L/N/S/T/U/W/A	82-90	007-960	———	002-102
SC500/A Scrambler	73-74	007-960	———	002-102
WR500ZD/ZE	92-93	007-960	———	002-102
TT500C/D	76-77	007-955	———	———
TT500E/F/G/H	78-81	007-963	———	———
XT500E/F Dual Sport	78-79	———	———	007-996

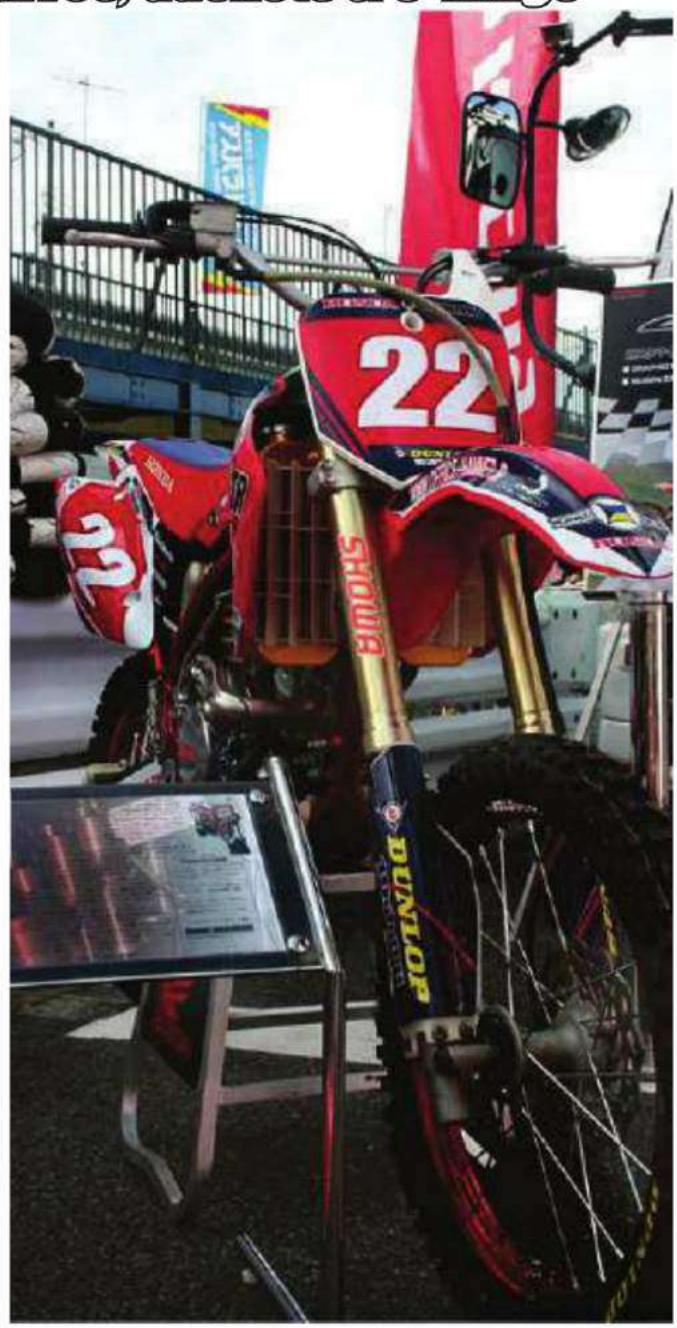

009-334

009-310

009-331

009-324

Pingel Power-Flo™ Fuel Valves

People who demand performance demand Pingel® Products. Pingel Fuel Valves provide more fuel flow than OEM petcocks. THIS IS A MUST WITH drag racing and high performance applications. Manufactured from billet with high quality stainless steel components. Power-Flo™ fuel valves feature highly polished aluminum or highly polished chrome-plated brass finishes with either 1/4"NPT, 3/8"NPT or HD metric thread 22mm. 5/16" outlet in single, dual or triple with or without reserve. Fuel Valves listed sold each.

Fuel Valve Pingel No.	Reserve	Inlet	Outlet 5/16"	Order No.	Fuel Valve Pingel No.	Reserve	Inlet	Outlet 5/16"	Order No.
1211-AH (Hex)	Yes	3/8" NPT	Single	009-303	4211-AH	Yes	3/8" NPT	Single	009-304
1211-CH6	Yes	3/8" NPT	Single	009-320	4211-CH6	Yes	3/8" NPT	Single	009-323
1311-AH (Hex)	Yes	22mm Metric	Single	009-300	4311-AH	Yes	22mm Metric	Single	009-301
1311-CH	Yes	22mm Metric	Single	009-328	4321-CH	Yes	22mm Metric	Single	009-324
3110-D-AH	No	1/4" NPT	Dual	009-309	6111-AH	Yes	1/4" NPT	Single	009-307
3110-D-AH16A	No	1/4" NPT	Dual	009-331	6210-AH	No	3/8" NPT	Single	009-314
3210-D-AH	No	3/8" NPT	Dual	009-310	6211-AH	Yes	3/8" NPT	Single	009-305
3211-D-AH	Yes	3/8" NPT	Dual	009-311	6211-CH	Yes	3/8" NPT	Single	009-336
32GSXR	No	3/8" NPT	Dual	009-312	6211-CR	Yes	3/8" NPT	Single	009-337
3311-D-AH	Yes	22mm Metric	Dual	009-334	6311-AH	Yes	22mm Metric	Single	009-302
4110-AH61A	No	1/4" NPT	Single	009-338	6381-CH	Yes	22mm Metric	Single	009-327
4111-CH3	Yes	1/4" NPT	Single	009-322	8210-T-AH	No	3/8" NPT	Triple	009-316

009-350

Fuel Valve Adapter Plates

2 bolt tank pattern adapter plates to NPT. The adapter plate is bolted to the tank with the fuel valve threaded into or onto the plate. Adapter plates come complete with gasket, screws, copper sealing washers and hylomar sealer.

Description	Pingel No.	Order No.
1/4" NPT		
34mm bolt center	A1601C	009-369
3/8" NPT		
34mm bolt center	A1602C	009-350
44mm bolt centers	A1702C	009-352
44mm with offset center hole	A1702C-O	009-353
46mm bolt centers	A1802C	009-355
50mm bolt centers	A1902C	009-357
Blank, drill your own	A1902C-B	009-359

Chrome Plated Adapter Nuts

The adapter nut is threaded onto the tank with the fuel valve threaded into the nut. Adapter comes with nylon gasket. Sold each.

Description	Pingel No.	Order No.
Adapts 13/16" or 20mm diameter threaded male tank bung to 1/4" NPT valves	A2000C	009-370
Adapts 7/8" or 22mm diameter threaded male tank bung to 3/8" NPT valves	A2001C	009-365
Adapts 15/16" or 24mm diameter threaded male tank bung to 3/8" NPT valves	A2002C	009-366
Adapts 11/16" or 18mm diameter threaded male tank bung to 1/4" NPT valves	A2003C	009-371
Adapts 22mm diameter threaded male tank bung to 22mm NPT valves	A3001C	009-368

Honda

Model	Year	Fuel Valve Pingel No.	Reserve Outlets	Number of Outlets	Size of No.	Order Pingel No.	Description/Notes No.	Adapter	Order
CB550		6111-AH	Yes	Single	5/16" /straight	009-307	Adapter nut required	A2000C	009-370
CBR600F2/F3 Hurricane	91-98	3311-D-AH	Yes	Dual	5/16" /straight	009-334	Adapter included	——	——
CBR600F4 Hurricane		3311-D-AH	Yes	Dual	5/16" /straight	009-334	Adapter included	A2003C	009-370
CB750F Super Sport		6111-AH	Yes	Single	5/16" /straight	009-307	Adapter nut required	——	——
VF750C Magna		4321-CH	Yes	Single	3/8" /straight	009-324	Adapter included	——	——
VF750S Sabre		6111-AH	Yes	Single	5/16" /straight	009-307	Adapter nut required	A2000C	009-370

Fuel Valves

Honda

Model	Year	Fuel Valve Pingel No.	Reserve	Number of Outlets	Size of Outlets	Order No.	Description/Notes	Adapter Pingel No.	Order No.
CBR900RR	93-99	3311-D-AH	Yes	Dual	5/16" /straight	009-334	Adapter included	———	———
CB1100F Super Sport	1983	6111-AH	Yes	Single	5/16" /straight	009-307	Adapter nut required	A2000C	009-370
CBX	79-81	6111-AH	Yes	Single	5/16" /straight	009-307	Adapter nut required	A2003C	009-371
CBX	1982	6111-AH	Yes	Single	5/16" /straight	009-307	Adapter nut required	A2000C	009-370
VT1100 Aero		6381-CH	Yes	Single	3/8" /90° down	009-327	Adapter included	———	———
VT1100 Shadow		4111-CH3	Yes	Single	5/16" /straight	009-322	Adapter included	———	———
VT1100 Shadow ACE		6381-CH	Yes	Single	3/8" /90° down	009-327	Adapter included	———	———
VT1100 Shadow Spirit		6381-CH	Yes	Single	3/8" /90° down	009-327	Adapter included	———	———
GL1500 Valkyrie	97-01	1311-CH	Yes	Single	5/16" /straight	009-328	Adapter included	———	———

Kawasaki

Model	Year	Fuel Valve Pingel No.	Reserve	Number of Outlets	Size of Outlets	Order No.	Description/Notes	Adapter Pingel No.	Order No.
S1A/S1B/S1C-250	73-75	8210T-AH	No	Triple	5/16" /straight	009-316	Adapter nut required	A2001C	009-365
KH250A5	1976	8210T-AH	No	Triple	5/16" /straight	009-316	Adapter nut required	A2001C	009-365
S2/S2A-350	72-73	8210T-AH	No	Triple	5/16" /straight	009-316	Adapter nut required	A2001C	009-365
S3/S3A-400	74-75	8210T-AH	No	Triple	5/16" /straight	009-316	Adapter nut required	A2001C	009-365
KH400A3/A4/A5	76-78	8210T-AH	No	Triple	5/16" /straight	009-316	Adapter nut required	A2001C	009-365
H1/H1A/H1B/H1C-500	69-72	8210T-AH	No	Triple	5/16" /straight	009-316	Adapter nut required	A2002C	009-366
H2/H2A/H2B/H2C-750	72-75	8210T-AH	No	Triple	5/16" /straight	009-316	Adapter nut required	A2002C	009-366
Z1/A/B-900, KZ900A4/A5	73-77	6311-AH	Yes	Single	5/16" /straight	009-302	Adapter included	———	———
		3311-D-AH	Yes	Dual	5/16" /straight	009-334	Adapter included	———	———
ZX900 Ninja ZX-9R	98-01	4121-AH	Yes	Single	5/16" /straight	009-306	Adapter plate required	A1601C	009-369
KZ1000 w/thread on valve		6311-AH	Yes	Single	5/16" /straight	009-302	Adapter included	———	———
		3311-D-AH	Yes	Dual	5/16" /straight	009-334	Adapter included	———	———
KZ1000/1100 w/bolt on vlv.		6211-AH	Yes	Single	5/16" /straight	009-305	Adapter plate required	A1702C	009-352
		3211-D-AH	Yes	Dual	5/16" /straight	009-311	Adapter plate required	A1702C	009-352
ZG1000 Concours	2004	6211-CH (Hex)	Yes	Single	5/16" /straight	009-336	Adapter plate required	A1702C	009-352
		6211-CR (Round)	Yes	Single	5/16" /straight	009-337	Adapter plate required	A1702C	009-352
KZ1300A	79-82	6211-AH	Yes	Single	5/16" /straight	009-305	Adapter plate required	A1702C	009-352
VN1500 Vulcan		1211-CH6	Yes	Single	5/16" /straight	009-320	Adapter included	———	———

Suzuki

Model	Year	Fuel Valve Pingel No.	Reserve	Number of Outlets	Size of Outlets	Order No.	Description/Notes	Adapter Pingel No.	Order No.
GSF600/1200 Bandit		4211-AH	Yes	Single	5/16" /straight	009-304	Adapter plate required	A1602C	009-350
		3211-D-AH	Yes	Dual	5/16" /straight	009-311	Adapter plate required	A1602C	009-350
GS750/1000/1100E	79-83	6211-AH	Yes	Single	5/16" /straight	009-305	Adapter plate required	A1702C	009-352
Order adapter plate required		3211-D-AH	Yes	Dual	5/16" /straight	009-311	Adapter plate required	A1902C	009-357
GS1150E	84-85	6211-AH	Yes	Single	5/16" /straight	009-305	Adapter plate required	A1702C	009-352
Order adapter plate required		3211-D-AH	Yes	Dual	5/16" /straight	009-311	Adapter plate required	A1902C	009-357
GSX-R750	86-95	32GSXR-D-AH	No	Dual	3/8" /90° down	009-312	Adapter plate required	A1702C-0	009-353
GSX-R750	96-98	32GSXR-D-AH	No	Dual	3/8" /90° down	009-312	Adapter plate required	A1602C	009-350
GSX-R1100	86-98	32GSXR-D-AH	No	Dual	3/8" /90° down	009-312	Adapter plate required	A1702C-0	009-353
GSX1100F Katana		3211-D-AH	Yes	Dual	5/16" /straight	009-311	Adapter plate required	A1702C	009-352
Order adapter plate required	Adapter plate required	A1902C	009-357						

Triumph

Model	Year	Fuel Valve Pingel No.	Reserve	Number of Outlets	Size of Outlets	Order No.	Description/Notes	Adapter Pingel No.	Order No.
All Models	92-99	6211-AH	Yes	Single	5/16" /straight	009-305	Adapter plate required	A1602C	009-350
		6211-CH	Yes	Single	5/16" /straight	009-336	Adapter plate required	A1602C	009-350
All Models	04-05	6211-CH	Yes	Single	5/16" /straight	009-336	Adapter plate required	A1602C	009-350
		6211-CR	Yes	Single	5/16" /straight	009-337	Adapter plate required	A1602C	009-350

Yamaha

Model	Year	Fuel Valve Pingel No.	Reserve	Number of Outlets	Size of Outlets	Order No.	Description/Notes	Adapter Pingel No.	Order No.
YZ85	02-07	4110-D-AH61A	No	Single	5/16" /straight	009-338	Adapter included	———	———
YFS200 Blaster **ATV**	98-06	4110-D-AH61A	No	Single	5/16" /straight	009-338	Adapter included	———	———
YZ250F	01-07	4110-D-AH61A	No	Single	5/16" /straight	009-338	Adapter included	———	———
YFM350 Warrior **ATV**	87-94	4110-D-AH61A	No	Single	5/16" /straight	009-338	Adapter included	———	———
YFM350 Raptor **ATV**	05-06	4110-D-AH61A	No	Single	5/16" /straight	009-338	Adapter included	———	———
YFZ350 Banshee **ATV**	87-05	3210-D-AH	No	Dual	5/16" /straight	009-310	Adapter plate required	A1602C	009-350
		3110-D-AH61A	No	Dual	5/16" /straight	009-331	Adapter included	———	———
		3211-D-AH	Yes	Dual	5/16" /straight	009-311	Adapter plate required	A1602C	009-350
		4110-D-AH61A	No	Single	5/16" /straight	009-338	Adapter included	———	———
YZ400F/YZ426/YZ450	98-07	4110-D-AH61A	No	Single	5/16" /straight	009-338	Adapter included	———	———
YFZ450 **ATV**	04-06	4110-D-AH61A	No	Single	5/16" /straight	009-338	Adapter included	———	———
YFM660R Raptor **ATV**	01-05	4110-D-AH61A	No	Single	5/16" /straight	009-338	Adapter included	———	———
XVS650 V-Star **Street**		4211-CH6	Yes	Single	5/16" /straight	009-323	Adapter included	———	———
FZR1000 **Street**	87-95	6211-AH	Yes	Single	5/16" /straight	009-305	Adapter plate required	A1602C	009-350
		3211-D-AH	Yes	Dual	5/16" /straight	009-311	Adapter plate required	A1602C	009-350
YZF-R1 **Street**		4211-AH	Yes	Single	5/16" /straight	009-304	Adapter plate required	A1602C	009-350
XVZ13 Royal-Star **Street**		4211-CH6	Yes	Single	5/16" /straight	009-323	Adapter included	———	———
XVZ1600 Road Star		4211-CH6	Yes	Single	5/16" /straight	009-323	Adapter included	———	———

009-405

009-402

Fuel Petcock Repair Kits

Kit contains all necessary o-rings and diaphragms to rebuild one fuel petcock. Sold in kits. ***Made in Japan.*** Note: Does not include plastic diaphragm spacer block. **Kawasaki & Yamaha applications with an asterisk * may require longer bolts.**

Honda Street

Model	Year	Fuel Petcock Repair Kit	Diaphragm Only
VTR250 Interceptor	88-90	009-405	———
CB450SC Nighthawk	85-86	009-405	———
CMX450C Custom	86-87	009-405	———
CX500C Custom	81-82	009-405	———
CX500D Deluxe	81-82	009-405	———
FT500 Ascot	82-83	009-405	———
GL500I Silverwing Interstate	81-82	009-405	———
VT500C Shadow	83-86	009-405	———
VT500FT Ascot	1984	009-405	———
CB550SC Nighthawk	1983	009-405	———
XL600V Transalp	89-90	009-405	———
CB650SC Nighthawk	83-85	009-405	———
CX650C Custom	1983	009-405	———
GL650I Silverwing Interstate	1983	009-405	———
CB700SC Nighthawk	84-86	009-405	———
VF700S Sabre	84-85	009-405	———

Kawasaki Street

EX250E1/E2 Ninja 250R	86-87	009-421	009-502
EX250F2-F6F Ninja 250R	88-06	———	009-505
KZ250L1 CSR	1982	009-410	———
KZ250W1 LTD	1983	009-410	———
S1A/B/C-250 (two stroke triple)	73-75	009-414	———
KH250A5 (two stroke triple)	1976	009-414	———
EX305B1 GPz	1983	009-410	———
KZ305A1/A2 CSR	81-82	009-410	———
KZ305B1 LTD	1982	009-410	———
KZ305B LTD Belt (manual, US Model)	87-88	009-410	———
KZ305B LTD Belt (vacuum, Calif. model)	87-88	009-421	009-502
S2/A-350 (two stroke triple)	72-73	009-414	———
S3/A-400 (two stroke triple)	74-75	009-414	———
KH400A3/A4 (two stroke triple)	76-77	009-414	———
KZ440A1/A2/A3/A4 LTD	80-83	009-402	009-501
KZ440B1/B2	80-81	009-402	009-501
KZ440D1/D2/D3/D4/D5 LTD Belt	80-83	009-402	009-501
KZ440G1	1982	009-402	009-501
EN450A1/A2/A3/A4/A5/A6 LTD 454	85-90	009-421	009-502
EN500A1-A7 Vulcan 500	90-96	009-421	009-502
EN500C1-C10 Vulcan 500 LTD	96-05	009-435	009-506
EX500A1/A2/A3/A4/A5/A6/A7	87-93	009-421	009-502
EX500D1-D12 Ninja 500	94-05	009-421	009-502
KZ550A1/A2/A3/A4	80-83	009-402	009-501
KZ550C1/C2/C3/C4 LTD	80-83	009-402	009-501

Kawasaki Street

Model	Year	Fuel Petcock Repair Kit	Diaphragm Only
KZ550D1 GPz	1981	009-402	009-501
KZ550F1/F2 Spectre & LTD	83-84	009-421	009-502
KZ550H1/H2 GPz	82-83	009-421	009-502
KZ550M1 LTD	1983	009-421	009-502
ZR550B1/B2	90-91	009-435	009-506
ZR550B3/B4 (Canadian models)	92-93	009-435	009-506
ZX550A1/A2 GPz	84-85	009-421	009-502
KL600A1 KLR600	1984	009-410	———
KL600B1/B2 KLR600	85-86	009-410	———
ZL600A1/A2 Eliminator	86-87	009-402	009-501
ZL600B2/B3 Eliminator 600	96-97	009-402	009-501
ZX600A1/A2/A3 Ninja 600R	85-87	009-421	009-502
ZX600B1 Ninja 600RX	1987	009-421	009-502
ZX600C1-C10 Ninja 600R	88-97	———	009-502
ZX600D1/D2/D3/D4 Ninja ZX-6	90-93	009-429	009-505
ZX600E1-E10 Ninja ZX-6	93-02	009-425	———
ZX600F1/F2/F3 Ninja ZX-6R*	95-97	009-424	———
KL650A1-A19 KLR650	87-05	009-421	009-502
KL650A6F/A7F KLR650	06-07	009-421	009-502
KL650B2 Tengai KLR650	1990	009-421	009-502
KZ650B3	1979	009-403	009-500
KZ650E1/F1	1980	009-403	009-500
KZ650H1 CSR	1981	009-402	009-501
KZ650H2/H3 CSR	82-83	009-403	009-500
KZ700A1	1984	009-403	009-500
VN700A1 Vulcan	1985	009-421	009-502
ZN700A1/A2 LTD	84-85	009-421	009-502
KZ750B1/B2/B3/B4 (2 cylinder)	76-79	009-414	———
KZ750E1/E2/E3	80-82	009-403	009-500
KZ750F1 LTD	1983	009-421	009-502
KZ750G1 LTD (2 cylinder)	1980	009-414	———
KZ750H1/H2/H3/H4 LTD	80-83	009-403	009-500
KZ750K1 LTD (2 cylinder)	1983	009-402	009-501
KZ750K2 LTD (2 cylinder, Canadian model)	1984	009-402	009-501
KZ750L3	1983	009-403	009-500
KZ750M1 CSR (2 cylinder)	1982	009-402	009-501
KZ750N1/N2 Spectre	82-83	009-421	009-502
KZ750R1 GPz	1982	009-403	009-500
VN750A2-A21 Vulcan	86-05	009-421	009-502
VN750A6F Vulcan	2006	009-421	009-502
ZR750C1/C2	91-92	009-435	009-506
ZR750C3 (Canadian model)	1993	009-435	009-506
ZR750F2 ZR-7	2000	009-435	009-506
ZX750A1/A2/A3 GPz	83-85	009-403	009-500
ZX750F1/F2/F3/F4 Ninja 750R	87-90	009-429	009-505
ZX750H2 Ninja ZX-7	1990	009-425	———
ZX750J1/J2 Ninja ZX-7	91-92	009-425	———
ZX750K1/K2 Ninja ZX-7R	91-92	009-425	———
ZX750L1/L2/L3 Ninja ZX-7	93-95	009-425	———
ZX750M1/M2 Ninja ZX-7R	93-94	009-425	———
Z1/A/B-900	73-75	009-414	———

Fuel Petcock Repair Kits

009-403

009-424

Kawasaki Street

Model	Year	Fuel Petcock Repair Kit	Diaphragm Only
KZ900A4/A5	76-77	009-414	—
KZ900B1 LTD	1976	009-414	—
ZL900A1/A2 Eliminator	85-86	009-408	009-500
ZX900A1/A2/A3 Ninja	84-86	009-403	009-500
ZX900B1/B2/B3/B4 Ninja ZX-9R*	94-97	009-424	—
KZ1000A1	1977	009-414	—
KZ1000A2/A2A	1978	009-413	—
KZ1000A3/A3A/A4 MKII	79-80	009-413	—
KZ1000B1/B2/B3/B4 LTD	77-80	009-414	—
KZ1000C1 Police (manual petcock)	1978	009-414	—
KZ1000C1A-C4 Police (vacuum petcock)	78-81	009-413	—
KZ1000D1 Z1R	1978	009-414	—
KZ1000D3 Z1R	1980	009-414	—
KZ1000E1/E2 Shaft ST	79-80	009-407	—
KZ1000G1 LTD Classic	1980	009-414	—
KZ1000J1/J2	81-82	009-407	—
KZ1000K1/K2 LTD	81-82	009-403	009-500
KZ1000M1/M2 CSR	81-82	009-403	009-500
KZ1000P1-P21 Police	82-02	009-403	009-500
KZ1000P24 Police	2005	009-403	009-500
KZ1000R1/R2 Replica	82-83	009-407	—
ZG1000A1-A20 Concours	86-05	009-408	009-500
ZL1000A1 Eliminator	1987	009-408	009-500
ZX1000A1/A2 Ninja 1000R	86-87	009-408	009-500
KZ1100A1/A2/A3 Shaft	81-83	009-407	—
KZ1100D1/D2 Spectre	82-83	009-403	009-500
KZ1100L1 LTD	1983	009-403	009-500
ZN1100B1/B2 LTD 1100	84-85	009-403	009-500
ZR1100A1/A2	92-93	009-435	009-506
ZR1100A3/A4 (Canadian model)	94-95	009-435	009-506
ZR1100C3/C4 ZRX1100	99-00	—	—
ZX1100A1/A2 GPZ	83-84	009-414	—
ZX11000C1/C2/C3/C4 Ninja ZX-11	90-93	009-425	—
ZX11000D1-D9 Ninja ZX-11	93-01	009-425	—
ZX1100E1/E2/E3 GPz	95-97	009-425	—
ZX1100F1 GPz (ABS)	1996	009-425	—

Kawasaki ATV

KLT110A1/A2/A3	84-86	009-410	—
KLT160A1	1985	009-410	—
KLT185A1/A2	86-87	009-410	—
KLF300A1/A2 Bayou	86-87	009-410	—
KVF400A1/A2 Prairie 400 4x4*	97-98	009-424	—
KVF400C1/C2/C3/C4 Prairie 400 4X4*	99-02	009-424	—
KVF400B1/D1/D2/D3/D4 Prairie 400*	98-02	009-424	—

Kawasaki applications with an asterisk * may require longer bolts

Kawasaki Dual Sport & Offroad

Model	Year	Fuel Petcock Repair Kit	Diaphragm Only
KX65A1/A2/A3/A4/A5/A6*	00-05	009-424	—
KX85A1/A2/A3/A4/A5*	01-05	009-424	—
KD80N1/N2/N3	88-90	009-410	—
KX100C1/C2/C3*	98-00	009-424	—
KX100D1/D2/D3/D4/D5*	01-05	009-424	—
KX125J1/J2/K1/K2/K3/K4/K5*	92-98	009-424	—
KX125L1/L2/L3/L4*	99-02	009-424	—
KL250D1-D22 KLR250	85-05	009-410	—
KLX250D2/D3/D4*	94-96	009-424	—
KX250J1/J2*	92-93	009-424	—
KX250K1/K2/K3/K4/K5*	94-98	009-424	—
KX250L1/L2/L3/L4*	99-02	009-424	—
KLX300A2-A10*	97-05	009-424	—
KLX300A6F*/ A7F	06-07	009-424	—
KL600A1 KLR600	1984	009-410	—
KL600B1/B2 KLR600	85-86	009-410	—
KL650A1-A19 KLR650	87-05	009-421	009-502
KL650A6F/A7F KLR650	06-07	009-421	009-502
KL650B2 Tengai KLR650	1990	009-421	009-502

Suzuki Street

GS300LZ/LD	82-83	009-475	009-503
GS300LF	1985	009-475	009-503
GS400B/XB/C/XC	77-78	009-479	009-504
GS425N/EN/LN	1979	009-479	009-504
GS450ED	1983	009-475	009-503
GS450GAZ/GAD Automatic	82-83	009-475	009-503
GS450GAF Automatic	1985	009-475	009-503
GS450LD	1983	009-475	009-503
GS450LF/LG/LH/LJ	85-88	009-475	009-503
GS450TX/TZ	81-82	009-475	009-503
GS450TXZ/TXD	82-83	009-475	009-503
GS550ES3/ESE/EF/ESF/ESG	83-86	009-475	009-503
GS550LT	1980	—	009-504
GS550LX/LZ	81-82	009-475	009-503
GS550LF/LG	85-86	009-475	009-503
GS550MZ Katana	1982	009-475	009-503
GS550TX	1981	009-475	009-503
GSF600ST/SV/SW/SX/SY Bandit	96-00	009-435	009-506
GSF600SK1/SK2/SK3 Bandit	01-03	009-435	009-506
GSX600FJ-FV Katana	88-97	009-437	009-508
GSXR600WN/WP	92-93	009-480	009-504
GSX-R600V/W/X/Y	97-00	009-455	009-507
GR650D/XD Tempter	1983	009-475	009-503
GS650EX/EZ	81-82	009-475	009-503
GS650GX/GZ/GD	81-83	009-475	009-503
GS650GLX/GLZ/GLD	81-83	009-475	009-503
GS650MD Katana	1983	009-475	009-503
GS700EF/ESF	1985	009-475	009-503
GS750B/C/EC/N/EN	77-79	009-479	009-504

Fuel Petcock Repair Kits

Suzuki Street

Model	Year	Fuel Petcock Repair Kit	Diaphragm Only
GS750ET	1980	———	009-504
GS750EX/EZ/ED/ESD	81-83	009-475	009-503
GS750LT	1980	———	009-504
GS750LX	1981	009-475	009-503
GS750SD Katana	1983	009-475	009-503
GS750TZ/TD	82-83	009-475	009-503
GSX750FK-FV Katana	89-97	009-437	009-508
GSX-R750RG	1986	009-475	009-503
GSX-R750G/H	86-87	009-475	009-503
GSX-R750J/K/L/M/N	88-92	009-480	009-504
GSX-R750WP	1993	009-480	009-504
GSX-R750T/V	96-97	009-455	009-507
GS850GN/GT/GX	79-81	009-479	009-504
GS850GLT	1980	———	009-504
GS850GLX/GLZ/GLD	81-83	009-475	009-503
GS1000C/EC/N/EN/SN	78-79	009-479	009-504
GS1000ET	1980	———	009-504
GS1000GT/GX	80-81	009-479	009-504
GS1000GLT	1980	———	009-504
GS1000GLX	1981	009-475	009-503
GS1000ST	1980	———	009-504
GS1000SZ	1982	009-475	009-503
GS1100ET	1980	———	009-504
GS1100EX/EZ/ED/ESD	81-83	009-475	009-503
GS1100GZ/GLZ/GD/GLD	82-83	009-475	009-503
GS1100GKZ/GK2/GKD/GKE	82-84	009-475	009-503
GS1100LT	1980	———	009-504
GS1100SD Katana	1983	009-475	009-503
GSX1100FJ/FK/FL/FM/FN/FP Katana	88-93	009-440	009-509
GSX-R1100G/H/J	86-88	009-475	009-503
GSX-R1100K/L/M/N	89-92	009-480	009-504
GSX-R1100WP/WR	93-94	009-480	009-504
GS1150ES3/ESE/EF/ESF	83-85	009-475	009-503
GSF1200SV/SAV/SW/SX/SY Bandit	97-00	009-435	009-506

Suzuki Dual Sport & Offroad

DR250L/M/N/P Offroad	90-93	009-424	———
DR250SEP/SER/SES Dual Sport	93-95	009-427	———
DR350L-X Offroad	90-99	009-424	———
DR350SP-SEX Dual Sport	93-99	009-427	———

Yamaha Street

SR250G/H/J Exciter	80-82	009-402	009-501
SR250TH Exciter	1981	009-402	009-501
XS360C/D/2D	76-77	009-400	009-504
XS400D	1977	009-400	009-504
XS400E/F/2F/G/H	78-81	009-403	009-500
XS400SG/SH Special	80-81	009-403	009-500
XS400J/K Maxim	82-83	009-402	009-501
XS400RJ/RK Seca	82-83	009-402	009-501
SR500E/F/G/H	78-81	009-400	009-504
XS500E	1978	009-400	009-504
XV535A/AC Virago	1990	009-443	———
XV535E/EC-L/LC Virago	93-99	009-443	———
XV535SF/SFC-SJ/SJC Virago	94-97	009-443	———
XJ550H/J/K Maxim	81-83	009-402	009-501
XJ550RH/RJ/RK Seca	81-83	009-402	009-501
XZ550RJ/RK Vision	82-83	009-402	009-501
FJ600L/LC/N/NC	84-85	009-402	009-501
FZ600S/SC/T/TC/U/UC	86-88	009-427	009-506
FZR600W/WC/A/AC*	89-90	009-424	———
FZR600RA/RAC-RL/RLC*	90-99	009-424	———
SRX600S/SC	1986	009-402	009-501

Yamaha Street

Model	Year	Fuel Petcock Repair Kit	Diaphragm Only
XJ600SD/SDC-SK/SKC Seca II	92-98	009-445	009-506
XJ650G/H/J/K Maxim	80-83	009-402	009-501
XJ650LH Midnight Maxim	1981	009-402	009-501
XJ650RJ Seca	1982	009-402	009-501
XS650E	1978	009-400	009-504
XS6502F	1979	009-403	009-500
XS650G/H Special II	80-81	009-403	009-500
XS650SH/SJ/SK Heritage	81-83	009-403	009-500
XJ700N/NC/S/SC Maxim	85-86	009-403	009-500
XJ700XN/XNC/XS/XSC Maxim X	85-86	009-403	009-500
XV700L/LC/N/NC Virago	84-85	009-402	009-501
XV700CS/CSC/CT/CTC Virago	86-87	009-402	009-501
XV700SS/SSC Virago	1986	009-402	009-501
XJ750RH/RJ/RK Seca	81-83	009-402	009-501
XS750D/2D/E/F	77-79	009-400	009-504
XS750SE after frame no. 311211	1978	009-403	009-500
XS750SF	1979	009-403	009-500
XV750H/J/K Virago	81-83	009-402	009-501
XV750MK Midnight Virago	1983	009-402	009-501
XV750U/UC-K1/KC1 Virago	88-98	009-442	———
XS850SG/SH Special	80-81	009-403	009-500
XJ900RK Seca	1983	009-403	009-500
XV920J/K Virago	82-83	009-402	009-501
XV920MK Midnight Virago	1983	009-402	009-501
XV920RH/RJ/RK	81-83	009-402	009-501
XS1100E/F/G/H	78-81	009-400	009-504

Yamaha ATV

YF60S Moto-4	1985	009-424	———
YT60L/N Tri-Zinger	84-85	009-424	———
YFM80N/S/T/U Moto-4	85-88	009-424	———
YFM80D/E/F/G/H Moto-4	92-96	009-424	———
YFM80J/K/L/M/MC/N/NC Badger	97-01	009-424	———
YFM80WP/WR/WS Raptor	02-04	009-424	———
YFM80RT Raptor RT/ RV	05-06	009-424	———
YFM100T/U/W/A/B Champ	87-91	009-424	———
YFA1W/A/B/D/E/F/G/H/J Breeze	89-97	009-424	———
YFA1K-S/SC Breeze	98-04	009-424	———
YFM125S/GT Grizzly 125	04-05	009-424	———
YFM125GHT Grizzly 125 Hunter	2005	009-424	———
YFM200N Moto-4	1985	009-424	———
YFM200DXS/DXT/DXU/DXW Moto-4	86-89	009-424	———
YFS200U/W/A/B/D/E/F/G Blaster	88-95	009-424	———
YFS200H/J/K/L/M/N Blaster	96-01	009-424	———
YFS200P/R/S/T/V Blaster	02-06	009-424	———
YTM200K/L/N Tri-Moto	83-85	009-424	———
YTM200EK/EL Tri-Moto	83-84	009-424	———
YTM200ERN Tri-Moto	1985	009-424	———
YFM225S/T/U Moto-4	86-88	009-424	———
YTM225DXK/DXL/DXN Tri-Moto	83-85	009-424	———
YTM225DRN/DRS Tri-Moto	85-86	009-424	———
YFU1W (230cc) Pro-Hauler	1989	009-424	———
YFU1TW (230cc) Pro-Hauler	1989	009-424	———
YFB250D/E/F/G/H Timberwolf	92-96	009-424	———
YFB250UH/UJ/UK Timberwolf	96-98	009-424	———
YFB250FWF/FWG/FWH Timberwolf	94-96	009-424	———
YFB250D/E/F/G/H Timberwolf	92-96	009-424	———
YFB250UH/UJ/UK Timberwolf	96-98	009-424	———
YFB250FWF/FWG/FWH Timberwolf	94-96	009-424	———
YFB250FWJ/FWK Timberwolf	97-98	009-424	———
YFB250FWL/FWM Timberwolf 4WD	99-00	009-424	———

Yamaha applications with an asterisk * may require longer bolts

Fuel Petcock Repair Kits

Yamaha ATV

Model	Year	Fuel Petcock Repair Kit	Diaphragm Only
YFM250W/A/B Moto-4	89-91	009-424	—
YFM250XL/XLC/XM/XMC Beartracker	99-00	009-424	—
YFM250XN/XP Beartracker 2WD	01-02	009-424	—
YFM250XHN Beartracker Real Tree Hunter	2001	009-424	—
YFM250XHP Bear Tracker	2002	009-424	—
YFM350ERT/ERU/ERW/ERA Moto-4	87-90	009-424	—
YFM350ERD/ERE/ERF/ERG Moto-4	92-95	009-424	—
YFM350FWT-FWJ Big Bear	87-97	009-424	—
YFM350FWBJ/FWBK/FWBKC Big Bear 4x4	97-98	009-424	—
YFM350FWBL/FWBLC Big Bear 4WD	1999	009-424	—
YFM350FHL/FHLC Big Bear 4WD Hunting	1999	009-424	—
YFM350FXG/FXH/FXJ/FXK Wolverine	95-98	009-424	—
YFM350FXL/FXLC/FXM/FXMC	99-00	009-424	—
YFM350FXN/FXNC Wolverine	2001	009-424	—
YFM350S/T Raptor 350	04-05	009-424	—
YFM350UH/UJ/UK/UL/ULC Big Bear 2WD	96-99	009-424	—
YFM350XT-XS/XSC Warrior	87-04	009-424	—
YFZ350T-T Banshee	87-05	009-424	—
YFZ350LES Banshee Limited Edition	2004	009-424	—
YFZ350SET Banshee SE	2005	009-424	—
YFM400FWE~FWJ Kodiak	93-97	009-424	—
YFM400FWK/FWL/FWLC Kodiak	98-99	009-424	—
YFM400FWN Buckmaster 4WD	00-01	009-424	—
YFM400NM/NMC/NN/NHN Big Bear 2WD	00-01	009-424	—
YFM600FWAK/FWAL/FWALC Grizzly	98-99	009-424	—
YFM600FWAM/FWAMC Grizzly	2000	009-424	—
YFM600HM/HMC Grizzly Hunting	2000	009-424	—
YFM600FWAN/FWAHN Grizzly Hunter Edition	2001	009-424	—
YFM660FHP Grizzly Hunter Edition	2002	009-424	—
YFM660FP/FPS/FR/FS Grizzly 600	02-04	009-424	—
YFM660FHRWL Grizzly Wetlands	2003	009-424	—
YFM660FHRH Grizzly Real Tree HH	2003	009-424	—
YFM660FRGY Grizzly 660 4x4 Metalic	2003	009-424	—
YFM660RN/RNC/RP/RR/RS Raptor	01-04	009-424	—
YFM660RT Raptor 660	2005	009-424	—
YFM660RPB Raptor Limited Edition	2002	009-424	—
YFM660RLER/RLES Limited Edition	03-04	009-424	—
YFM660RSET Raptor 660 SE	2005	009-424	—

Yamaha Dual Sport & Offroad

Model	Year	Fuel Petcock Repair Kit	Diaphragm Only
PW80E-T Y-Zinger	93-05	009-424	—
YZ80E1/F1/G1/H1/J1/K1/L/M1/N1	93-01	009-424	—
YZ85P/R/S/T	02-05	009-424	—
TT90RM/RMC Offroad	2000	009-424	—
TT-R90N/P/R/S/ES/ET Offroad	01-05	009-424	—
RT100A Offroad	1990	009-424	—
RT100D/E/F/G/H/J/K/L/M	92-00	009-424	—
TT125RM/RMC	2000	009-424	—
TT-R125LWM/N/LN/P/LPC	00-02	009-424	—
TT-R125ER/ES/ET	03-05	009-424	—
TT-R125LR/LER/LS/LES/LT/LET	03-05	009-424	—
YZ125D1/E1/F1/G1/H1/K1	92-98	009-424	—
YZ125L/M/N/P/R/S1/T1	99-05	009-424	—
TW200B/BC-T1/T1C Trailway	91-05	009-424	—
TT225L/LC/RM/RMC	99-00	009-424	—
TT-R225N/NC/P/PC/R/RC/S/SC	01-04	009-424	—
XT225D/DC-T/TC Serrow (Dual)	92-05	009-424	—
TT-R230T/TC	2005	009-424	—
TT-R250N/NC-T/TC	01-05	009-424	—
WR250ZD/ZE/ZF/ZG/ZH/ZJ Offroad	92-97	009-424	—
WR250FN/FP/FR/FS	01-04	009-424	—
YZ250E1/F1/G1/H1/J1/K1	93-98	009-424	—

Yamaha Dual Sport & Offroad

Model	Year	Fuel Petcock Repair Kit	Diaphragm Only
YZ250L/M/N/P/R/S1/T1	99-05	009-424	—
YZ250FP/FR/FS/FT Offroad 4-Stroke	02-05	009-424	—
XT350F/FC-M/MC Dual Sport	94-00	009-424	—
YZ400FK/FL Offroad 4-stroke	98-99	009-424	—
WR400FK/FL/FM Offroad 4-stroke	98-00	009-424	—
WR426FN/FP Offroad 4-stroke	01-02	009-424	—
YZ426FN/FP Offroad 4-stroke	01-02	009-424	—
WR450FR/FS/FT	03-05	009-424	—
YZ450FR/FS/FT	03-05	009-424	—
WR500ZD/ZE	92-93	009-424	—

Quick Disconnect Inline Fuel Couplers

For quick disconnections between tanks, pumps, filter and carbs. Two types available, single straight-thru and shut-off.

Description	Order No.
Straight-Thru, no-shut-off with 5/16" fuel line fitting	009-170
Shut-off with 5/16" fuel line fitting	009-171

950-700 950-701

Motion Pro Inline Fuel Valves

Ideal for use on ATV's and other vehicles where inline fuel control is necessary. Not recommended for engines above rate size. Sold each.

Description	Order No.
Inline Fuel Valve for 3/16" I.D. Fuel Valve, up to 200cc	950-700
Inline Fuel Valve for 5/16" I.D. Fuel Valve, up to 300cc	950-701
Inline Fuel Valve for 1/4" I.D. Fuel Valve, up to 300cc	950-702
Inline Fuel Valve with 1/4" threaded pipe and 1/4" barb end	950-707

K&N Fuel Line "T" *Sold each*

High flow, durable, lightweight, easy to use. One size fits 1/4" to 3/8" I.D. hose. Color: Black, Height: 0.999 in (25 mm),Length: 1.575 in (40 mm), Material Used: Plastic

Order No. 009-103

Fuel Filters

"Economical, high quality, see through design.

Street Filters- Sintered Bronze Element

Description	Order No.
1/4" fitting x 2" body "Slim Line"	009-200
1/4" fitting x 43mm body	009-225
1/8" fitting x 1/8" body	009-226

Aluminum Body Fuel Filters

Super short polished aluminum body with cleanable bronze element

Description	Order No.
5/16" fitting, single inlet, single outlet	009-220
5/16" fitting, double inlet, double outlet	009-221

Brass T-Fittings *Sold each*

Description	Order No.
1/4" Brass Fuel T	009-100
.17" Brass Fuel T	009-101
5/16" Brass Fuel T	007-811
3/8" Brass Fuel T	009-102

Steel O-Clip Pincer Tool

Used to install and remove O-clips, PVC coated grip.

Order No. 950-774

Motion Pro Fuel Line Fittings Kit

This Fuel Line Fittings Kit contains a wide selection of Y and T fittings, hose clamps, o-clips and O-clip Pincher tool in an ABS plastic case. Ideal for the shop mechanic. Individual replacement parts are available to replenish the kit.

Order No. 950-462

Sudco Fuel & Vacuum Hose Clips

OEM sized fuel and vacuum hose clips. Sold pk/5.

Made in Japan.

Description	Order No.
1/4" (6mm) I.D.	009-090
9/32" (7mm) I.D.	009-091
5/16" (8mm) I.D.	009-092
3/8" (9mm) I.D.	009-093

K&L Spring Action Hose Clamps

OEM sized hose clamps. Sold pk/5.

Made in Japan.

Description	Order No.
13mm I.D.	009-820
15mm I.D.	009-821
17mm I.D.	009-822
21mm I.D.	009-823
25mm I.D.	009-824

Fuel, Primer, Overflow & Vent Hose

MOTION PRO® PREMIUM (TYGON) FUEL HOSE

These premium quality fuel lines from Motion Pro are resistant to swelling, hardening, direct sunshine, and cracking. Flexible in temperatures -35∫ F to + 165∫ F. Stretches easily over most common motorcycle fuel fittings or petcocks. ***Made in the U.S.A.***
Sold pre-cut foot or cut to length.
Not for fuel with greater than 10% methanol/alcohol content.

Description	Order No.
Gray 3/16" (5mm) I.D	009-029
Gray 1/4" (6mm) I.D	009-030
Gray 5/16" (8mm) I.D	009-031
Clear 3/16" (5mm) I.D	009-040
Clear 1/4" (6mm) I.D	009-041
Clear 5/16" (8mm) I.D	009-042

Yellow Tygon Fuel Hose

Sold pre-cut foot or cut to length.
Not for fuel with greater than 10% methanol/alcohol content.

Description	Order No.
3/16" (5mm) I.D. Yellow	009-034
1/4" (6mm) I.D.Yellow	009-035

Polyurethane Fuel, Vent Hose & Primer Hose

Sold pre-cut foot or cut to length.
Not for fuel with greater than 10% methanol/alcohol content.

Description	Order No.
Red 1/4" ID x 3/8" OD	009-070R
Red 5/16" ID x .473" OD	009-071R
Red 3/8" ID x 9/16" OD	009-072R
Yellow 1/4" ID x 3/8" OD	009-070Y
Yellow 5/16" ID x .473 OD	009-071Y
Yellow 3/8" ID x 9/16" OD	009-072Y
Blue 5/16" ID x .473" OD	009-071B
Blue 3/8" ID x 9/16" OD	009-072B
Green 5/16" ID x .473" OD	009-071G
Green 3/8" ID x 9/16" OD	009-072G
Clear 5/16" ID x .473" OD	009-071C
Clear 3/8" ID x 9/16" OD	009-072C

Stainless Steel Hose Protectors

Protection for fuel hose. Sold each. ***Hose not included.***

Description	Order No.
1-1/2" Diameter	009-085
1.0" Diameter	009-086
7/16" Diameter	009-087
3/8" Diameter	009-088

Polyurethane Fuel, Vent Hose & Primer Hose

Sold pre-cut foot or cut to length.
Not for fuel with greater than 10% methanol/alcohol content.

Description	Order No.
Blue Vent Hose 6/32" (4mm) I.D	009-005
Blue Primer Hose 1/8" (3mm) I.D.	009-010
Purple Fuel Hose 1/4" (6mm) I.D.	009-015
Blue Fuel Hose 1/4" (6mm) I.D	009-020
Clear Fuel Hose 1/4" (6mm) I.D	009-021
Black (Opaque) Fuel Hose 1/4" (6mm) I.D	009-022

Sudco Gray Fuel Hose with Red Stripe

Kitaco brand fuel hose, gray with red stripe. Highest quality fuel hose available. This hose is found on many ATV, motocross and offroad Keihin carburetors. Sold pre-cut only, 1 meter length. ***Made in Japan.***
Not for fuel with greater than 10% methanol/alcohol content.

Description	Order No.
5/32" (3.5mm) I.D.	009-060M
7/32" (5mm) I.D.	009-061M
9/32" (7mm) I.D.	009-062M
5/16" (8.0mm) I.D	009-063M

Keihin Clear Pink Overflow Hose

Sold pre-cut foot only.

Genuine (Plas-Tech) replacement hose. This hose is found on many ATV, motocross and offroad Keihin carburetors. ***Made in Japan.***

Description		Order No.
1/8" (3mm) I.D.	Keihin No. 95003-05033	018-538

Mikuni Clear Pink Overflow Hose

Sold pre-cut foot only.

Description		Order No.
1/8" (3mm) I.D.	Mikuni No. VM14/49	002-755

Mikuni Black Vent Hose

Sold pre-cut foot only.

Description		Order No.
6/32" (4mm) I.D.	Mikuni No. 888-24011	002-478

005-192

K&N OE Replacement Air Filters

K&N replacement air filters are designed to fit right into your stock airbox. Pre-oiled and ready for installation. Filters can be cleaned and reused again and again. K&N's unique accordion screen/fabric grid design will supply more air. Increased air flow means increased engine performance. ***Made in the USA***. Sold each.

Ducati

Model	Year	K&N No.	Order No
600SS	91-99	DU-0900	005-192
M600 Monster	93-01	DU-0900	005-192
620 Sport	2003	DU-9098	005-665
750 Paso	87-88	DU-0900	005-192
750SS	91-98	DU-0900	005-192
750SS	1999	DU-9098	005-665
750SS	2002	DU-9098	005-665
M750 Monster	1996	DU-9098	005-665
M750 Monster	97-98	DU-0900	005-192
M750 Monster	99-01	DU-9098	005-665
Monster 750 Dark	99-00	DU-9098	005-665
800 Sport	2003	DU-9098	005-665
800SS	03-05	DU-9098	005-665
900 Super Light	91-97	DU-0900	005-192
900SS	91-98	DU-0900	005-192
900SS	1999	DU-9098	005-665
900SS FE	1998	DU-0900	005-192
900SS I.E.	00-01	DU-9098	005-665
900SS I.E.	2002	DU-0900	005-192
Monster 900	93-98	DU-0900	005-192
Monster 900	99-00	DU-9098	005-665
Monster 900 City	1999	DU-9098	005-665
Monster 900 Cromo	1999	DU-9098	005-665
Monster 900 Cromo	00-01	DU-0900	005-192
Monster 900 Dark	2000	DU-9098	005-665
Monster 900 Dark I.E.	2002	DU-9098	005-665
Monster 900 I.E.	00-02	DU-9098	005-665
Monster M900S	99-00	DU-9098	005-665
ST4 916	99-03	DU-9098	005-665
ST2 944	97-03	DU-9098	005-665
ST3 992	04-05	DU-9098	005-665
ST4S 996	01-05	DU-9098	005-665
1000SS	03-05	DU-9098	005-665

HARLEY-DAVIDSON®

XL883C Sportster Custom	2003	HD-1388	005-378
XL883R Sportster	02-03	HD-1388	005-378
XLH883 Sportster Custom	99-02	HD-1388	005-378
XLH883 Sportster	88-03	HD-1388	005-378
XLH883 Sporster Deluxe	88-95	HD-1388	005-378
XLH883 Sporster Hugger	88-03	HD-1388	005-378
XLH883R Sportster	2000	HD-1388	005-378
XLH1200 Sportster	88-02	HD-1388	005-378
1340 FLH Electra Glide Special	1984	HD-2084	005-382
1340 FLHS	1984	HD-2084	005-382
1340 FLHTC Electra Glide Classic	84-85	HD-2084	005-382
1340 FLHX	1984	HD-2084	005-382

Honda

CBR600F3 Hurricane	95-98	HA-6095	005-370
CBR600F4i Hurricane	01-05	HA-6001	005-706
CBR600RR	03-05	HA-6003	005-707
CB700SC Nighthawk	84-86	HA-7084	005-372
CB750A Automatic	76-78	HA-0100	005-357
CB750C Custom	80-82	HA-1079	005-362
CB750F Super Sport	75-78	HA-0100	005-357
CB750F Super Sport	79-82	HA-1079	——
CB750K0/K1-K5	69-75	HA-0100	005-357
CB750 K	76-78	HA-0100	005-357
CB750K	79-82	HA-1079	——
CB750L LTD	1979	HA-1079	——
CB750SC Nighthawk	82-83	HA-1079	——
VT750 Shadow ACE Deluxe	98-00	HA-7500	005-708
VT750 Shadow ACE Deluxe	01-03	HA-7500	005-708
VT750 Shadow Deluxe	98-01	HA-7500	005-708
VT750 Shadow Spirit	98-03	HA-7500	005-708
VFR750F	90-97	HA-0003	005-356
VFR800 Interceptor	02-05	HA-8098	005-710
VFR800A (ABS) Interceptor	02-05	HA-8098	005-710
VFR800FI Interceptor	98-01	HA-8098	005-710
CB900C Custom	80-82	HA-1079	——
CB900F Super Sport	81-82	HA-1079	——
CBR900RR	93-99	HA-9092-A	005-376
CBR929RR	00-01	HA-9200	005-711
CBR954RR	02-03	HA-9502	005-712
CB1000C Custom	1983	HA-1079	——
CB1100F Super Sport	1983	HA-1079	——
CBR1100X Blackbird	97-98	HA-1197	005-613
ST1100	91-02	HA-1191	005-702
ST1100A (ABS)	92-02	HA-1191	005-702
GL1200 Goldwing	1984	HA-8084	005-374
GL1200A Goldwing Aspencade	84-87	HA-8084	005-374
GL1200I Goldwing Interstate	84-87	HA-8084	005-374
GL1500 Goldwing	88-90	HA-8088	005-709
GL1500A Aspencade	91-00	HA-8088	005-709
GL1500I Interstate	91-96	HA-8088	005-709
GL1500SE Goldwing SE	90-00	HA-8088	005-709
GL1500C Valkyrie	97-01	HA-1596	005-704
GL1500CF Valkyrie Interstate	99-01	HA-1596	005-704
GL1500CT Valkyrie Tourer	97-00	HA-1596	005-704
GL1800 Goldwing	01-05	HA-1801	005-705
GL1800A Goldwing	01-05	HA-1801	005-705
VTX1800	02-03	HA-1802	——

Kawasaki

EX500A1-A7	87-93	KA-5087	005-559
EX500D1/D2/D3 Ninja 500	94-96	KA-5087	005-559
EX500D4-D12 Ninja 500R	97-05	KA-5087	005-559
EX500D6F Ninja 500R	2006	KA-5087	005-559
H1/A/B/C/D/E/F-500	69-75	KA-1000	005-351
KZ550H1/H2 GPz	82-83	KA-1700	——
ZX600E1-E10 Ninja ZX-6	93-02	KA-6093	005-393
ZX600E11/E12 ZZR600	03-04	KA-6093	005-393
ZX600F1/F2/F3 Ninja ZX-6R	95-97	KA-6095	005-395
ZX600K1 Ninja ZX-6RR	2003	KA-6003	005-716
ZX600M1 Ninja ZX-6RR	2004	KA-6003	005-716
ZX636B1/B2 Ninja ZX-6R	03-04	KA-6003	005-716
H2/A/B/H2C-750 Mach IV	72-75	KA-1100	005-554
ZX750L1/L2/L3 Ninja ZX-7	93-95	KA-0007	005-391
ZX750M1/M2 Ninja ZX-7R	93-94	KA-0007	005-391
ZX750N1 Ninja ZX-7RR	1996	KA-7596	005-718
ZX750P1-P8 Ninja ZX-7R	96-03	KA-7596	005-718
VN800A1-A11 Vulcan 800	95-05	KA-8095	005-719
VN800B1-B10 Vulcan 800 Classic	96-05	KA-8095	005-719
VN800C2 Vulcan 800 Drifter	2000	KA-8095	005-719
VN800E1-E6F Vulcan 800 Drifter	01-06	KA-8095	005-719
Z1/A/B-900	73-75	KA-0800	005-350
ZX900B1/B2/B3/B4 Ninja ZX-9R	94-97	KA-9094	005-672
KZ1000J1/J2/J3	81-83	KA-1600	005-557

Air Filters

Kawasaki

Model	Year	K&N No.	Order No.
KZ1000K1/K2 LTD	81-82	KA-1600	005-557
KZ1000M1/M2 CSR	81-82	KA-1600	005-557
KZ1000P1-P21 Police	82-02	KA-1600	005-557
KZ1000P24 Police	2005	KA-1600	005-557
KZ1000R1/R2 Replica	82-83	KA-1600	005-557
ZX1000C1/C2 Ninja ZX-10R	04-05	KA-1004	005-713
KZ1100A1/A2/A3 Shaft	81-83	KA-1600	005-557
KZ1100D1/D2 Spectre	82-83	KA-1600	005-557
KZ1100L1 LTD	1983	KA-1600	005-557
ZX1200A1-A6 Ninja ZX-12R	00-05	KA-1299-1	005-714
VN1500D1/D2 Vulcan 1500 Classic	96-97	KA-1596	005-715
VN1500E1-E5 Vulcan Classic	98-02	KA-1596	005-715
VN1500G1/G1A/G2A Vulcan Nomad	99-00	KA-1596	005-715
VN1500J1/J2 Vulcan Drifter	99-00	KA-1596	005-715
VN1500L1-L3 Vulcan Nomad F.I.	00-02	KA-1596	005-715
VN1500N1-N3 Vulcan Classic F.I.	00-02	KA-1596	005-715
VN1500R1/R2 Vulcan Drifter	01-02	KA-1596	005-715

Suzuki

GS500EK-EK2	89-02	SU-5589	005-568
GS500FK4/FK5	04-07	SU-5589	005-568
GSF600T/V/W/X Bandit	96-99	SU-7593	005-580
GSF600Y/K1/K2/K3 Bandit	00-03	SU-6000	005-732
GSX600FJ-FK6 Katana	88-06	SU-7592	005-579
GSX-R600WN/WP	92-93	SU-7593	005-580
GSX-R600V/W/X/Y (CA &USA models)	97-00	SU-7596	005-345
GSX-R600K1/K2/K3	01-03	SU-7500	005-734
GSX-R600K4/K5	04-05	SU-7504	005-735
DL650K4/K5/K6/K7 V-Storm	04-07	SU-1002	005-729
SV650X/Y/K1/K2	99-02	SU-6599	005-639
SV650K3/K4/K5/K5/K6/K7	03-07	SU-6503	005-733
SV650SX/SY/SK1/SK2	99-02	SU-6599	005-639
SV650SK3/SK4/SK5 /SK6/SK7	03-07	SU-6503	005-733
GSX750F Katana	89-06	SU-7592	005-579
GSX-R750WP/WR/WS	93-95	SU-7593	005-580
GSX-R750T/V/W/X	96-99	SU-7596	005-345
GSX-R750Y/K1/K2/K3	00-03	SU-7500	005-734
GSX-R750K4/K5	04-05	SU-7504	005-735
Boulevard C50 800	05-08	SU-8001	005-748

Suzuki

Model	Year	K&N No.	Order No.
VL800 Intruder	01-05	SU-8001	005-748
DL1000K2/K3/K4/K5 V-Storm	02-05	SU-1002	005-729
GSX-R1000K1/K2/K3/K4	01-04	SU-7500	005-734
SV1000K3/K4	03-04	SU-6503	005-733
SV1000SK3/SK4/SK5	03-05	SU-6503	005-733
TL1000RW/RX/RY/RK1/RK2/RK3	98-03	SU-1098	005-670
GSX1100FJ-FP Katana	88-93	SU-7592	005-579
GSX-R1100WP/WR/WS/WT/WV/WW	93-98	SU-7593	005-580
GSF1200SAV/SV-SY Bandit	97-00	SU-7593	005-580
GSF1200SK1-SK5 Bandit	01-05	SU-6000	005-732
GSX1300RX-RK7 Hayabusa	99-07	SU-1399	005-673
VL1500L Intruder	98-04	SU-1598	005-730

Yamaha

YZF-R6	99-05	YA-6001	005-741
XJ650G/H/J/K Maxim	80-83	YA-1650	005-591
XJ650LH Midnight Special	1981	YA-1650	005-591
XJ650RJ Seca	1982	YA-1650	005-591
XS650C/D/E/F/2F	76-79	YA-1152	——
XS650SE/SF	78-79	YA-1152	——
XVS650L-P/PC V-Star	99-02	YA-6598	005-742
XVS650AK/AKC-AP/APC V-Star Classic	98-02	YA-6598	005-742
XV700L/LC/N/NC Virago	84-85	YA-1186	005-739
XV700CS/CSC/CT/CTC Virago	86-87	YA-1186	005-739
XV700SS/SSC Virago	1986	YA-1186	005-739
XV750 Virago	88-97	YA-1186	005-739
XV1000L/LC/N/NC Virago	84-85	YA-1186	005-739
YZF-R1	99-01	YA-1098	005-637
YZF-R1	02-03	YA-1002	005-736
YZF-R1	04-05	YA-1004	005-737
XV1100 Virago	86-99	YA-1186	005-739
XVZ13 Venture & Venture Royale	86-93	YA-1283	005-587
XVZ1300 Royal Star	96-02	YA-1595	005-740
XVZ1300 Royal Star Tour Deluxe	2000	YA-1595	005-740
XVZ1300 Royal Star Tour Classic	2000	YA-1595	005-740

005-146

005-700

K&N ATV OE Replacement Air Filters

K&N ATV air filters boost performance and are ideal for extended use in dusty or off-road racing or riding. Designed to replace your factory air filter. ***Made in the USA***. Sold each.

Honda

Model	Year	K&N Ref.	Order No.	Precharger
ATC250R **(clamp-on type)**	81-82	RU-1780	005-127	005-452
TRX250R	86-89	HA-4250	005-146	———
TRX300 Fourtrax 300	88-97	HA-3093	005-645	———
TRX300 Fourtrax 300	98-00	HA-3098	005-646	———
TRX350 Rancher	00-05	HA-3500	005-647	———
TRX350 Rancher 4x4	00-05	HA-3500	005-647	———
TRX350 Rancher 4x4 ES	00-05	HA-3500	005-647	———
TRX350 Rancher ES	00-05	HA-3500	005-647	———
TRX400EX Fourtrax 400EX	99-00	HA-4099	005-625	005-489
TRX400EX Sportrax 400EX	01-05	HA-4099	005-625	005-489
TRX450R	04-05	HA-4504	005-699	———
TRX500 Foreman	2005	HA-5000	005-649	———
TRX500 Foreman 4x4	2005	HA-5000	005-649	———
TRX500 Foreman 4x4 ES	2005	HA-5000	005-649	———
TRX500 Foreman Rubicon	00-05	HA-5000	005-649	———
TRX500 Foreman Rubicon GP Scape	00-05	HA-5000	005-649	———
TRX650 Rincon	03-05	HA-5000	005-649	———
TRX650 Rincon GP Scape	04-05	HA-5000	005-649	———

Kawasaki

KSF250A Mojave 250	87-04	KA-2587	005-650	———
KEF300A1-A6 Lakota 300	95-00	KA-2587	005-650	———
KEF300B1-B3 Lakota Sport	01-03	KA-2587	005-650	———
KLF300B1-B17 Bayou 300	88-04	KA-4093	005-652	———
KLF300C1-C16 Bayou 4x4	89-04	KA-4093	005-652	———
KVF300A1-A4 Prairie 4x4	99-02	KA-4093	005-652	———
KVF300B1-B4 Prairie 300	99-02	KA-4093	005-652	———
KLF400B1-B7 Bayou 4x4	93-99	KA-4093	005-652	———
KSF400A KFX400	03-05	SU-4002	005-731	———
KVF400A1/A2 Prairie 4x4	97-98	KA-4093	005-652	———
KVF400B1 Prairie 400	1998	KA-4093	005-652	———
KVF400C1-C4 Prairie 4x4	99-02	KA-4093	005-652	———
KVF400D1-D4 Prairie 400	99-02	KA-4093	005-652	———

Suzuki

Model	Year	K&N Ref.	Order No.	Precharger
LT160	2004	SU-1691	005-655	———
LT-F160	91-01	SU-1691	005-655	———
LT230EH-EP	87-93	SU-2391	005-656	———
LT230GEF/GEG	85-86	SU-2391	005-656	———
LTF230G/H	86-87	SU-2391	005-656	———
LT-Z400K Quadsport	03-05	SU-4002	005-731	———
LT-A500	00-01	SU-5098	005-658	———
LTF500F	98-02	SU-5098	005-658	———

Yamaha

YFA1 Breeze	89-04	YA-2088	005-150	———
YFM125 Grizzly	04-07	YA-2088	005-150	———
YFS200 Blaster	88-06	YA-2088	005-150	———
YFM350FX Wolverine	94-05	YA-4350	005-153	———
YFM350X Warrior	87-04	YA-4350	005-153	———
YFM350 Raptor	04-07	YA-4350	005-153	———
YFZ350 Banshee	87-06	YA-3502	005-152	———
YFM400FW Kodiak	93-99	YA-2597	005-659	———
YFZ450R	04-07	YA-4504	005-700	005-486
YFM600 Grizzly	97-01	YA-4350	005-153	———
YFM660 Raptor	01-05	YA-6601	005-743	———

005-743

Air Filters

005-450

005-452

005-454

005-489

K&N ATV Precharger

K&N Precharger is a specially designed filter wrap made to extend the service interval of your K&N Air Filter when used in very dusty conditions. Made from durable polyester material containing uniform micron openings. The Precharger will stop dirt particles as small as .500" diameter, yet only adds a 10% restriction to the airflow of the filter. The Precharger is designed to be run dry and can be cleaned with K&N Filter Cleaner. The Precharger is custom made to fit each application. Elastic openings assure that the Precharger will stay in place. Sold each.

Universal Fit

Description	K&N No.	Order No.
3.5" round x 4" length	RU-0500PK	005-450
3.5" round x 5" length	RU-0510PK	005-452
3.5" round x 6" length	RU-0520PK	005-454
5.5" round x 5" length	22-8016PK	005-489

Pro-Vents Filtered Airbox Screen

Pro-Vents are easily installed and improve air box breathing. Universal applications. (ATV's, Dual Sport, Offroad) Sold each.

Order No. 005-201

K&N Custom Clamp On Air Filter Sets

RC oval/chrome end and RU rubber end clamp on filters. Fits Keihin and Mikuni carburetors listed.
Sold each. **Bold Red part numbers are sold in sets.** (Pk/2)
Made in the USA.

HARLEY- DAVIDSON®

Application	Year	Carburetor	Flange Dimension	Filter Dimension	K&N No.	Order No.
Sportster/Big Twin		VM38, 39, 41	2-7/16" / straight	round / 2"	RC-0850	005-100
		TM38, 39, 41	2-7/16" / straight	round / 2"	RC-0850	005-100
Sportster/Big Twin		VM40-44	2-3/4" / straight	round / 2"	RC-0920	005-101
Sportster/Big Twin		HS40	2-1/8" / offset	round / tapered	———	007-216
		Chrome bonnet for **005-216**			———	007-215
XR750/1000		VM38, 41	2-7/16" / 10 °	oval / 7"	RU-1240	005-175
		TM38, 41	2-7/16" / 10 °	oval / 7"	RU-1240	005-175
XR750/1000		VM38, 41	2-7/16" / 20 °	oval / 5"	RU-1370	005-332
		TM38, 41	2-7/16" / 20 °	oval / 5"	RU-1370	005-332

Honda Street

CBR600F2	91-94	FCR32, 33	2-1/8" / offset	oval / 2-3/4"	RU-3000	005-178
(motorcycle only)		FCR32, 33	2-1/8" / offset	oval / 2-3/4"	RU-3010	005-179
CBR600F2 (motorcycle & cars)	91-94	FCR32, 33			RU-2852	005-187
CBR900RR	93-99	FCR39,41	2-7/16" / dual	pyramid	RU-2952	005-174

Honda ATV

ATC90	70-78	VM24-VM28	1-11/16" / 40 °	tapered / 4"	R-1100	005-105
ATC110	79-85	VM24-VM28	1-11/16" / 40 °	tapered / 4"	R-1100	005-105
ATC185/S	80-83	VM24-VM28	1-11/16" / 40 °	tapered / 4	R-1100	005-105
ATC250R	81-84	VM30-VM34	2-1/4" / straight	round / 4"	RU-0600	005-113
		TM32, TM34	2-1/4" / straight	round / 4"	RU-0600	005-113
		PJ34	2-1/4" / straight	round / 4"	RU-0600	005-113
ATC250R	81-84	TM36, TM38	2-7/16" / straight	round / 4"	RU-0800	005-116

Honda Offroad

XR185	1979	VM28,TM28	1-11/16" / straight	round / 4"	RU-0200	005-112
XR200	1983	VM28,TM28	1-11/16" / straight	round / 4"	RU-0200	005-112

Kawasaki Street

ZX600 Ninja ZX-6	88-94	FCR35	2-7/16"/ dual	pyramid	RU-2952	005-174
ZX1000B1/B2/B3 Ninja ZX-10	88-90	FCR37, 39, 41	2-7/16" / dual	pyramid	RU-2952	005-174
ZX1100C/D Ninja ZX-11*	91-01	FCR37, 39, 41	2-7/16" / dual	pyramid	RU-2952	005-174
(*mini sprints only*- ZX1100)						

Kawasaki ATV

KLT200A/B	81-83	VM28, TM28	1-11/16" / straight	round / 4"	RU-0200	005-112

Norton

Commando 750/850 (single carb)		VM, TM34	2-1/4" / offset	round / 2-1/2"	RU-0650	005-185
Commando 750/850 (single carb)		VM, TM36, 38	2-7/16" / straight	round / 2"	RC-0850	005-100

Air Filters

Suzuki

Application	Year	Carburetor	Flange Dimension	Filter Dimension	K&N No.	Order No.
GSX-R750		RS36, 40	2-1/8" / straight	tapered / oval	RC-0981	005-121
		RS36, 40	2-1/8" / straight	tapered / oval	RU-0981	005-744
GSX-R750		FCR39, 41	2-3/8" / dual	straight / oval	RU-2922	005-184
GSX-R750W (liquid cooled)	93-95	FCR37, 39, 41	2-3/8" / dual	straight / oval	RU-3092	005-340
GSX-R1100		RS36, 41	2-1/8" / straight	tapered / oval	RC-0981	005-121
		FCR39, 41	2-3/8" / dual	straight / oval	RU-2922	005-184
GSX-R1100W (liquid cooled)	93-97	FCR37, 39, 41	2-3/8" / dual	straight oval	RU-3092	005-340

Suzuki ATV

LT230		VM28, TM28	1-11/16" / straight	round / 4"	RU-0200	005-112
LT250		VM, TM, PJ	2-7/16" / 20 °	round / 6"	RU-1770	005-123
		PWK 36-41				

Triumph

T120, T10, TR6, TR7		VM30, 32, 34	2-1/4" / offset	round / 1"	SU-305	005-111
		PJ, PWK 36-41				

Yamaha

RD350	73-75	VM, TM 30-34	2-1/4" / straight	round 4"	RU-0600	005-113
		PJ 30-34	2-1/4" / straight	round 4"	RU-0600	005-113
RZ350	84-85	VM, TM 30-34	2-1/4" / straight	round 4"	RU-0600	005-113
		PJ 30-34	2-1/4" / straight	round 4"	RU-0600	005-113
RD400	76-78	VM, TM 30-34	2-1/4" / straight	round 4"	RU-0600	005-113
		PJ 30-34	2-1/4" / straight	round 4"	RU-0600	005-113
FZR400R	88-90	FCR 32-33	2-1/8" / offset	oval / 4"	RC-2890	005-170
		FCR 32-33	2-1/8" / offset	oval / 4"	RC-2900	005-171
FZR600R	89-99	FCR 32-33	2-1/8" / offset	oval / 4"	RC-2890	005-170
		FCR 32-33	2-1/8" / offset	oval / 4"	RC-2900	005-171
FZR750RT/RU	87-88	FCR 37, 39, 41	2-7/16" / straight	round / 4"	RU-0800	005-116
FZR1000RT/RU	87-88	FCR 37, 39, 41	2-7/16" / straight	round / 4"	RU-0800	005-116
FZR1000	89-95	FCR 37, 39, 41	2-3/8" / straight	oval / 3"	RU-3092	005-340
		FCR 37, 39, 41	2-7/16" / straight	round / 5"	RU-0810	005-182

Yamaha ATV

YTM200 Tri-Moto		VM, TM28-30	1-11/16" / straight	round / 4"	RU-0200	005-112
YFZ350 Banshee	87-06	OEM VM26SS	1-3/4" / 10"	round / 6"	RU-1050	005-124
		OEM VM26SS	1-11/16" / straight	round / 5"	RU-0210	005-318
YFZ350 Banshee	87-06	TM28, PWK28	2-1/16" / 17.5 °	round / 5"	RU-1780	005-127
		TM28, PWK28	2-1/16" / 10 °	round / 6"	RU-1070	005-173
YFZ350 Banshee	87-06	VM30-34	2-1/4" / 5 °	round / 5"	RB-0610	005-310
		TM32-34	2-1/4" / straight	round / 6"	RU-0620	005-320
		PWK33, 35				
		PJ34				
YFZ350 Banshee	87-06	VM, TM	2-7/16" / straight	round / 6"	RU-3030	005-663
		PJ, PWK39	2-7/16" / straight	round / 4"	RU-0800	005-116

Karts/ Micro Sprints & Flat Track Bikes

		VM, TM, PJ	2-1/4" / straight	round / 4"	RU-0600	005-113
		PWK 30-35	2-1/4" / 5"	round / 5"	RB-0610	005-310
		PWK 30-35	2-1/4" / 6"	round / 6"	RU-0620	005-320
		VM, TM, PJ	2-7/16" / 20 °	round / 4"	RU-1750	005-176
		PWK 36-41	2-7/16" / 20 °	round / 5"	RU-1760	005-177
		PWK 36-41	2-7/16" / 20 °	round / 6"	RU-1770	005-123
		PWK 36-41	2-7/16" / 10 °	oval / 7"	RU-1240	005-175
		PWK 36-41	2-7/16" / straight	round / 6"	RU-1000	005-328
		PWK 36-41	2-7/16" / 20 °	oval / 5"	RU-1370	005-332
		PWK 36-41	2-7/16" / 20 °	oval / 7"	RU-1390	005-333
		PWK 36-41	2-7/16" / straight	round / 6"	RU-0820	005-114
		PWK 38, 39	2-7/16" / offset	round / 5-1/2" x 4"	RU-0880	005-324
		VM40, 44	2-3/4" / 10 °	round / 6"	RU-1470	005-126

K&N Custom Clamp On Air Filter Sets

RC oval/chrome end and RU rubber end clamp on filters. Use with stock carburetors, airbox removed on models listed. Sold in a pk/2, pk/4 and each as indicated. ***Made in the USA.***

Qt	Filter Style or Position	Flange Angle	K&N No.	Order No.
Pk/4	Oval	Offset	RC-2454	005-722
Pk/4	Oval	Offset	RC-0984	005-720
Pk/4	Oval	Offset	RC-1824	005-721
Pk/2	Oval	Dual	RU-2922	005-184
			RU-2852	005-187

005-720

Honda

Application	Year	K&N Ref.	Order No.
CB750C Custom	80-82	RC-0984	005-720
CB750F Super Sport	79-82	RC-0984	005-720
CB750K	79-82	RC-0984	005-720
CB750L LTD	1979	RC-0984	005-720
CB750SC Nighthawk	82-83	RC-0984	005-720
CB900C Custom	80-82	RC-0984	005-720
CB900F Super Sport	81-82	RC-0984	005-720
CB1000C Custom	1983	RC-0984	005-720
CB1100F Super Sport	1983	RC-0984	005-720

Kawasaki

KZ550H1/H2 GPz	82-83	RC-1824	005-721
ZX550A1/A2 GPz	84-85	RC-1824	005-721
ZL600A1/A2 Eliminator	85-86	RC-1824	005-721
ZL600B2/B3 Eliminator	96-97	RC-1824	005-721
ZX600A1/A2/A3 Ninja 600R	85-87	RC-1824	005-721
ZX600B1 Ninja 600RX	1987	RC-1824	005-721
ZX600C1-C10 Ninja 600R	88-97	RC-1824	005-721
KZ750E1/E2/E3	80-82	RC-1824	005-721
KZ750FI LTD	1983	RC-1824	005-721
KZ750H1/H2/H3/H4 LTD	80-83	RC-1824	005-721
KZ750L3	1983	RC-0984	005-720
KZ750N1/N2 Spectre	82-83	RC-0984	005-720
KZ750R1 GPz	1982	RC-0984	005-720
ZX750A1/A2/A3 GPz	83-85	RC-0984	005-720
Z1/A/B-900	73-75	RC-2454	005-722
KZ900A4/A5	76-77	RC-2454	005-722
KZ900B1 LTD	1976	RC-2454	005-722
KZ1000A1/A2	77-78	RC-2454	005-722
KZ1000A3/A4 MKII	79-80	RC-2454	005-722
KZ1000B1/B2/B3/B4 LTD	77-80	RC-2454	005-722
KZ1000C1-C4 Police	78-81	RC-2454	005-722
KZ1000D1 Z1R	1978	RC-2454	005-722
KZ1000D3 Z1R	1980	RC-2454	005-722
KZ1000E1/E2 Shaft ST	79-80	RC-2454	005-722
KZ1000J1/J2/J3	81-83	RC-0984	005-720
KZ1000K1/K2 LTD	81-82	RC-0984	005-720
KZ1000M1/M2 CSR	81-82	RC-0984	005-720
KZ1000P1-P17 Police	82-99	RC-0984	005-720
KZ1000R1/R2 Replica	82-83	RC-0984	005-720
ZG1000A Concours	86-02	RC-1824	005-721
ZL1000A1 Eliminator	1987	RC-1824	005-721
KZ1100A1/A2/A3 Shaft	81-83	RC-0984	005-720
KZ1100B1/B2 GPz	81-82	RC-0984	005-720
KZ1100D1/D2 Spectre	82-83	RC-0984	005-720
KZ1100L1 LTD	1983	RC-0984	005-720
ZN1100B1/B2 LTD Shaft	84-85	RC-0984	005-720
ZX1100A1/A2 GPz	83-84	RC-2454	005-722

Suzuki

Application	Year	K&N Ref.	Order No.
GSX600FJ/FK Katana	88-89	RC-1824	005-721
GSX600FL-FK2 Katana	90-02	RU-2922	005-184
GS700EF/ESF	1985	RC-0984	005-720
GS750B/C/EC/N/EN/L	77-79	RC-2454	005-722
GS750ET/EX/EZ	80-82	RC-0984	005-720
GS750ED/ESD	1983	RC-0984	005-720
GS750LT/LX	80-81	RC-0984	005-720
GS750SD Katana	1983	RC-0984	005-720
GS750TZ/TD	82-83	RC-0984	005-720
GSX750FK-FK2 Katana	89-02	RU-2922	005-184
GSX-R750G/RG/H	86-87	RC-1824	005-721
GSX-R750J/K/L/N	88-92	RU-2922	005-184
GS850GT/GLT~GD/GLD	80-83	RC-0984	005-720
GS1000C/EC/N/EN/LN	78-79	RC-2454	005-722
GS1000GT/GLT/GX/GLX	80-81	RC-0984	005-720
GS1000ST	1980	RC-0984	005-720
GS1000SZ Katana	1982	RC-0984	005-720
GS1100ET/EX/EZ/ED	80-83	RC-0984	005-720
GS1100GZ/GLZ/GD/GLD	82-83	RC-0984	005-720
GS1100GKZ/GK2/GKD/GKE	82-84	RC-0984	005-720
GS1100LT	1980	RC-0984	005-720
GS1100SD Katana	1983	RC-0984	005-720
GSX1100FJ~FP Katana	88-93	RC-1824	005-721
GSX-R1100G/H/J	86-88	RC-1824	005-721
GSX-R1100K/L/M/N	89-92	RU-2922	005-184
GS1150ESE/ESF/ESG	84-86	RC-0984	005-720
GS1150EF/EG	85-86	RC-0984	005-720
GS1150ES3/EF2	84-85	RC-0984	005-720
GSF1200SV-SY/SAV Bandit	97-00	RU-2922	005-184

Yamaha

FZR400R	88-90	RC-1824	005-721
FJ600L/LC/N/NC	84-85	RC-1824	005-721
FZ600S/SC/T/TC/U/UC	86-88	RC-1824	005-721
FZR600R	89-99	RU-2852	005-187
XJ600 Seca II	92-98	RC-1824	005-721
YX600 Radian	86-90	RC-1824	005-721
XJ650G/H/J/K Maxim	80-83	RC-1824	005-721
XJ650LH Midnight Maxim	1981	RC-1824	005-721
FZX700 Fazer	86-87	RC-1824	005-721
XJ700 Maxim	85-86	RC-1824	005-721
XJ750J/K Maxim	82-83	RC-1824	005-721
XJ750 Midnight Maxim	1983	RC-1824	005-721
XJ750RH/RJ/RK Seca	81-83	RC-1824	005-721
XJ900RK Seca	1983	RC-1824	005-721
XJ1100J Maxim	1982	RC-0984	005-720
XS1100F/G/H	79-81	RC-0984	005-720
XS1100LG/LH Midnight Special	80-81	RC-0984	005-720
XS1100SF/SG/SH Special	79-81	RC-0984	005-720

Air Filters

005-749

005-121

005-744

005-140

K&N Universal Clamp-On Air Filters

K&N Universal Air Filters are designed and manufactured for a variety of applications. Regardless of the angle, offset, or diameter of the air intake, there is probably a K&N Universal air filter available for your equipment. Sold each.

Mounting Flange Inside Dimension	Filter Outside Diameter	Filter Length	Flange Length	Flange Angle	Flange Type	K&N No.	Order No.
1-3/4"	3-1/2"	6"	5/8"	10°	centered	RU-1050	005-124
2-1/16"	3-1/2"	5"	5/8"	——	centered	RU-0510	005-724
2-1/16"	3-1/2"	6"	5/8"	——	centered	RU-0520	005-725
2-1/16"	3-1/2"	5"	3/4"	10°	angled	RU-1060	005-726
2-1/8"	3"	4"	5/8"	——	offset	RU-0981	005-744
2-1/8"	3"	4"	5/8"	——	offset	RC-0981	005-121
2-1/4"	3-1/2"	5"	5/8"	——	centered	RU-0610	005-638
2-1/4"	3-1/2"	5"	5/8"	5°	angled	RB-0610	005-310
2-1/4"	3-1/2"	6"	3/4"	10°	angled	RU-1090	005-728
2-1/4"	3-1/2"	5"	3/4"	10°	angled	RU-1080	005-727
1-11/16"	3"	2-3/4"	5/8"	——	centered	RC-1070	005-110
1-11/16"	2"	2-3/4"	5/8"	——	offset	RC-1820	005-140
2-7/16"	3-3/4"	2-3/4"	5/8"	——	centered	RU-2780	005-188
2-1/4"	3"	4-1/2"	5/8"	——	centered	RC-2340	005-749

K&N Filtercharger® Oil

The only oil specially formulated to work with in combination with the cotton fabric in K&N Filtercharger® elements providing outstanding air filtration. When used as directed, it quickly penetrates the filter pleats, where it remains suspended in the cotton fabric unit until the element is cleaned with K&N Air Filter Cleaner.

Air Filter Oil	K&N No.	Order No.
6-1/2 oz. aerosol can	99-0504	005-530
12 oz. aerosol can	99-0516	005-532
8 oz. squeeze bottle	99-0533	005-534

Air Filter Cleaner & Degreaser		
32 fl. oz. squirt bottle	99-0621	005-520
The only cleaner formulated for K&N FILTERCHARGERÆ ELEMENTS. **Note:** Not to be used on polished anodized aluminum.		

K&N Recharger® Filter Care Service Kit

This six step maintenance system is designed to recharge any K&N Filtercharger® Air Filter. It restores air flow efficiency so your Filtercharger® performs like new.

Recharger® Filter Care Service Kit	K&N No.	Order No.
Kit includes 6-1/2 oz. aerosol spray oil, 12 oz. filter cleaner and service decal.	99-5000	005-540

Recharger® Filter Care Service Kit		
Kit includes 8 oz. squeeze oil, 12 oz. filter cleaner and service decal. Same as **005-540** except has squeeze bottle instead of spray can.	99-5050	005-541

EMGO®

Emgo Universal Clamp-On Air Filters

These Emgo clamp-on air filters provide a universal fit with a reusable filter

Emgo Ref. No.	Flange I.D. Size	Overall Width	Length	Order No.
12-55739	39mm	3"	2 3/4"	005-783T
12-55742	42mm	3"	2 3/4"	005-784T
12-55748	48mm	3"	2 3/4"	005-786T
12-55752	52mm	3"	2 3/4"	005-787T
12-55754	54mm	3"	2 3/4"	005-788T

Honda

Application	EMGO Ref.	Order No.
CB250N/RS	12-55748	005-786T
CB400	12-55752	005-787T
CB400N	12-55748	005-786T
CB550CS	12-55754	005-788T
CB650	12-55752	005-787T
CB650F	12-55742	005-784T
CB750 (69-76)	12-55739	005-783T
CB750	12-55752	005-787T
CB750K	12-55754	005-788T
CB900 (thru 82)	12-55754	005-788T
CB1000	12-55754	005-788T
CB1100F	12-55754	005-788T
CBX1050	12-55754	005-788T
CBX550	12-55748	005-786T
MTX200	12-55742	005-784T
RRCB125/550	12-55739	005-783T
XL125	12-55739	005-783T
XL250RC	12-55742	005-784T

Suzuki

Application	EMGO Ref.	Order No.
DR125	12-55739	005-783T
GS125ES	12-55742	005-784T
GS250T/E	12-55748	005-786T
GS400S	12-55752	005-787T
GS400/450	12-55752	005-787T
GS550 (to 79)	12-55739	005-783T
GS550	12-55752	005-787T
GS650/750 Katana (80-85)	12-55754	005-788T
GS750	12-55742	005-784T
GS1000	12-55742	005-784T
GS1000 Katana	12-55742	005-784T
GSX250	12-55748	005-786T
GSX400E	12-55752	005-787T
GT250/380/550	12-55742	005-787T
GT500	12-55752	005-787T
GT750	12-55752	005-787T
RG250 Gamma	12-55742	005-784T
TS185ER	12-55742	005-784T

Kawasaki

Application	EMGO Ref.	Order No.
GPZ 305/400	12-55748	005-786T
GPZ550	12-55752	005-787T
GPZ750/900	12-55754	005-788T
KL250A/C	12-55742	005-784T
KH400	12-55742	005-784T
KZ250A/B	12-55748	005-786T
KZ400	12-55752	005-787T
KZ400A/550A/C/D	12-55739	005-783T
KZ440	12-55742	005-784T
KZ440	12-55752	005-787T
KZ550	12-55752	005-787T
KZ650	12-55752	005-787T
KZ650B	12-55739	005-783T
KZ750/900/1000	12-55742	005-784T
KZ750LTD	12-55754	005-788T
Z1A/B	12-55742	005-784T
ZR400	12-55752	005-787T
ZR550	12-55752	005-787T

Yamaha

Application	EMGO Ref.	Order No.
DT/RS/RX1000	12-55742	005-784T
DT125	12-55739	005-783T
DT250/MX (76-78)	12-55748	005-786T
FJ600	12-55754	005-788T
FJ1100	12-55754	005-788T
FJ1200	12-55754	005-788T
RD250	12-55742	005-784T
RD350/400	12-55742	005-784T
SR/XT500	12-55754	005-788T
XJ400	12-55748	005-786T
XJ550/900	12-55754	005-788T
XJ650/900	12-55752	005-787T
XS250/SE (78-81)	12-55748	005-786T
XS400SE (78-82)	12-55748	005-786T
XS750/850/110 (thru 79)	12-55752	005-787T
XT125	12-55739	005-783T
XT500	12-55748	005-786T

Air Filters & Air Filter Gaskets

FLO Oil Filters

2 Foam FilterSkins® Included!

PRO-SEAL™

PC Racing Flo Air Filters

PC Racing's Flo® X filters have a patent-pending design that includes two Foam Filterskins®. The main filter incorporates a bonded two layer precision foam and proper density for maximum performance. Made with the highest quality materials to last for years.

Honda

Model	Year	Flo Air Filter No.	Order No.	Pro Seal Gasket No.	Order No.
CR80R	86-02	PCF3X	005-793	PC7	—
CR85R	03-07	PCF3X	005-793	PC7	—
CR125R	89-01	PCF1X	005-791	PC1	945-041
CR125R	02-07	PCF1X	005-791	PC16	—
CR250R	88-01	PCF1X	005-791	PC1	945-041
CR250R	02-07	PCF1X	005-791	PC16	—
CRF250R	04-09	PCF2X	005-792	PC15	—
CRF250X	04-09	PCF2X	005-792	PC15	—
CRF450R	02-08	PCF2X	005-792	PC15	—
CRF450X	05-09	PCF2X	005-792	PC15	—
CR500R	89-01	PCF1X	005-791	PC1	945-041

Kawasaki

KX65	00-11	PCF4X	005-794	PC6	945-046
KX80	91-00	PCF4X	005-794	PC6	945-046
KX85	01-11	PCF4X	005-794	PC6	945-046
KX100	95-11	PCF4X	005-794	PC6	945-046
KX125	87-89	—	—	PC9	945-049
KX125	90-91	PCF1X	005-791	PC1	945-041
KX125	94-07	PCF1X	005-791	PC1	945-041
KDX200	89-96	—	—	PC9	945-049
KDX220	97-04	—	—	PC9	945-049
KDX250	91-94	—	—	PC9	945-049
KLX250R	94-96	—	—	PC9	945-049
KX250	87-89	—	—	PC9	945-049
KX250	90-91	—	—	PC1	945-041
KX250	94-07	PCF1X	005-791	PC1	945-041
KX250F	04-05	PCF1X	005-791	PC17	—
KX250F	06-11	PCF2X	005-792	PC18	945-050
KLX300R	97-07	—	—	PC9	945-049
KLX400R	2003	—	—	PC9	945-049
KLX450R	08-09	PCF2X	005-792		
KX450F	06-11			PCF2X	005-792
PC18	—				
KX500	87-04	—	—	PC9	945-049
KLX650R	93-96	—	—	PC9	945-049

PC Racing Pro-Seal™ Air Filter Gasket

PC Racing's Pro-Seal is the answer for a perfect filter to air box seal. Eliminates the use of grease. This neoprene gasket adheres to the rim inside the air box and creates a larger sealing surface. Perfect sealing time after time.

KTM

Model	Year	Flo Air Filter No.	Order No.	Pro Seal Gasket No.	Order No.
85 SX	04-07	PCF5X	—	PC5	945-045
125 SX	98-06	PCF5X	—	PC5	945-045
200	98-07	PCF5X	—	PC5	945-045
250 SX/SX-F	98-06	PCF5X	—	PC5	945-045
250 XC/XC-F	98-07	PCF5X	—	PC5	945-045
250/300	90-97	PCF1X	005-791	PC1	945-041
300	03-07	PCF5X	—	PC5	945-045
360	96-97	PCF1X	005-791	PC1	945-041
380	98-02	PCF5X	—	PC5	945-045
400	98-02	PCF5X	—	PC5	945-045
450 SX/SX-F	03-06	PCF5X	—	PC5	945-045
450 XC	03-07	PCF5X	—	PC5	945-045
520 XC	98-02	PCF5X	—	PC5	945-045
525 XC	98-02	PCF5X	—	PC5	945-045

Suzuki

RM65	03-06	PCF4X	005-794	PC6	945-046
RM80	86-01	PCF4X	005-794	—	—
RM85	02-11	PCF4X	005-794	—	—
RM100	2003	PCF4X	005-794	PC6	945-046
RM125	04-07	PCF1X	005-791	PC3	945-043
RM250	03-08	PCF1X	005-791	PC3	945-043
RMX250	96-99	—	—	PC9	945-049
RM-Z250	04-11	PCF1X	005-791	PC17	—
RM-Z250	2007	PCF1X	005-791	—	—
DR-Z400	00-07	—	—	PC9	945-049
RMZ450	05-11	PCF1X	005-791	PC3	945-043

Yamaha

YZ80	93-01	PCF4X	005-794	PC6	945-046
YZ85	02-11	PCF4X	005-794	PC6	945-046
YZ125	93-09	PCF1X	005-791	—	—
WR250F	01-07	PCF1X	005-791	—	—
YZ250	93-09	PCF1X	005-791	PC3	945-043
YZ250F	01-11	PCF1X	005-791	PC3	945-043
WR400F	98-00	PCF1X	005-791	—	—
YZ400F	98-99	PCF1X	005-791	PC3	945-043
WR426F	01-02	PCF1X	005-791	PC3	945-043
YZ426F	00-02	PCF1X	005-791	PC3	945-043
WR450F	01-02	PCF1X	005-791	—	—
YZ450F	03-08	PCF1X	005-791	PC3	945-043

Air Filters & Carburetor Vent System

PC Racing Filterskins™

Filterskins are an extremely thin but durable air filter cover. While allowing maximum airflow, an oiled Filterskin will catch 90% of the dirt that tries to pass through the air filter. Between races or between rides, simply pull off a dirty Filterskin and slide on a clean one. Filterskins are extremely elastic and each size will expand over a wide range of air filters sizes. Sold each.

Diameter	Length	Order No.	Applications
3" - 4"	3" - 4"	945-030	Small & short filters, short clamp-on and pod, KX60
3" - 5"	5" - 8'	945-032	Small & tall filters, tall clamp-on and pod, Honda Fourtrax & Pilot,
3" - 5"	5" - 8'	945-032	Yamaha Banshee/Warrior.
5" - 6"	2" - 5"	945-034	Honda XR's & ATC's, Hon/Suz/Yam 80cc MXers, Kaw KLR,
5" - 6"	2" - 5"	945-034	Yam Blaster & Breeze, Suz DR'S & 200-250 Quads
6" - 8"	4" - 7"	945-036	Honda CR's, Kaw KDX/KLX, KX, KTM/91, Suz DRZ, RM, RMX,
6" - 8"	4" - 7"	945-036	LT500 Quad,Yam WR/YZ
		945-038	Quick Release, see **945-036,** same applications

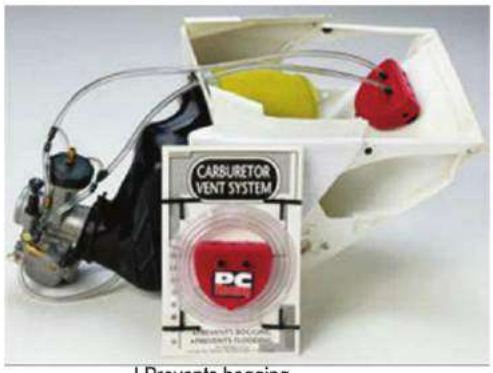

I Prevents bogging
I Washable filter
I Prevents flooding
I Fits all carburetors
I Velcro-mounted vent box

PC Racing Carburetor Vent Systems

PC Racing's carburetor vent system routes the venting hoses from the carburetor upward to a foam filter equipped vent box inside the airbox. This allows fuel to drain free without hesitation and ensures continual airflow into the carburetor. Prevents fuel from vapor-lock in the standard vent hoses. Another function of the vent system is keeping water out of the vent hose in stream crossings and when washing your bike.
Vent Systems are available for single and dual carburetors.

Carburetor Vent System: Single Carburetor (Black)
Applications: All single carbureted 2 and 4-stroke ATV's, karts, motorcycles, and snowmobiles with motorcycle style carburetors.
Order No. 945-003

Carburetor Vent System: Dual Carburetor (Blue)
Applications: All dual carbureted 2 and 4-stroke ATV's, karts, motorcycles, and snowmobiles with motorcycle style carburetors. This system works great on Yamaha YFZ350 Banshee.
Order No. 945-010

Gasket Sets

Vesrah Engine Gasket Sets

Gasket sets are available in complete and top end sets.
Made in Japan to OEM specifications. **Please call for availability.**

Honda Street

Model	Year	Complete	Top End
XL80S	80-85	608-083	609-083
XL100S	79-85	608-084	—
CB92 Benley Super Sport 125	59-62	608-140	—
CB92R Benley Super Racer 125	61-62	608-140	—
XL200R	83-84	608-070	—
CB72 Hawk 250	61-66	608-160	—
CB250	93-07	608-1179	609-5179
CMX250C Rebel	96-12	608-1179	609-5179
CMX250C Rebel	99-12	608-1179	609-5179
CMX250C2 Rebel	99-00	608-1179	609-5179
XL250R Dual Sport	85-87	608-1079	609-5079
XR250L Dual Sport	91-96	608-1079	609-5079
CB77 305 Super Hawk 305	61-68	608-162	—
CL77 Scrambler 305	65-68	608-162	—
CB350G	1973	608-012	—
CB350/K1-K4 Super Sport	68-73	608-012	—
CL350/K1-K5 Scrambler	68-73	608-012	—
SL350 Moto Sport	1970	608-012	—
CB400A Automatic	1978	608-053	—
CB400F Super Sport	75-77	608-170	—
CB400T1 Hawk	78-79	608-053	—
CB400TII Hawk	78-79	608-053	—
CB400T Hawk	80-81	608-053	—
CM400A Automatic	79-81	608-053	—
CM400C Custom	1981	608-053	—
CM400E	80-81	608-053	—
CM400T	79-81	608-053	—
CB450K1-K7 Super Sport	68-74	608-0152	—
CL450K1-K6 Scrambler	68-74	608-0152	—
CX500	78-79	608-052	—
CX500C Custom	79-82	608-052	—
CX500D Deluxe	79-81	608-052	—
GB500	89-90	608-1138	609-5138
GL500 Silverwing	81-82	608-052	—
GL500I Silverwing Interstate	81-82	608-052	—
XL500S	79-81	608-059	—
CB550	76	608-0155	—
CB550/K1	74-75	—	609-050
CB550K	76-78	—	609-050
CB550F	76-77	608-0155	
CB550F Super Sport	75-77	—	609-050
CB550SC Nighthawk	1983	608-1072	609-5072
CBR600F Hurricane	87-90	608-1119	609-5119
CBR600F2 Hurricane	91-94	608-1160	609-5160
CBR600F3 Hurricane	95-98	608-1180	609-5180
CBR600SE	1998	608-1180	609-5180
CBR600SJR Replica	1996	608-1180	609-5180
VT600C Shadow VLX	91-97	608-1148	609-5148
VT600C Shadow VLX	99-06	—	609-5176
VT600CD Shadow VLX Deluxe	93-94	608-1148	609-5148
VT600CD Shadow VLX	95-06	—	609-5176
VT600CD2 Shadow VLX	99-00	—	609-5176
XL600R	83-87	608-1081	609-5081

Honda Street

Model	Year	Complete	Top End
CB650SC Nighthawk	83-85	608-1072	609-5072
CX650C Custom	1983	608-094	609-094
GL650 Silverwing	1983	608-094	609-094
NT650 Hawk GT	88-90	—	609-5123
NX650	88-89	—	609-5122
XR650L Dual Sport	93-12	VG-1152-M	609-5122
CB700SC Nighthawk	84-86	608-1073	—
VF700C Magna	84-85	—	—
VF700F Interceptor	84-85	608-078	609-078
VF700S Sabre	84-85	—	—
VFR700F/F2 Interceptor	86-87	—	609-5105
VT700C Shadow	83-85	608-093	—
CB750 Nighthawk 750	91-03	608-1165	609-5165
CB750A Automatic	76-78	608-048	609-045
CB750C Custom	80-82	608-056	609-055
CB750F Super Sport	75-78	608-048	609-045
CB750F Super Sport	79-82	608-056	609-055
CB750K	70-73	608-0156	609-017
CB750K4/K5	74-75	608-048	609-045
CB750/K	76-78	608-048	609-045
CB750K	79-82	608-056	609-055
CB750L LTD	1979	608-056	609-055
CB750SC Nighthawk	82-83	608-056	609-055
VF750C Magna	94-02	—	609-5170
VF750C2 Magna	97-99	—	609-5170
VF750CD Magna Deluxe	95-96	—	609-5170
VF750F Interceptor	83-84	608-078	609-078
VF750S V45 Sabre	82-83	—	—
VFR750F	90-97	608-1149	609-5149
VT750C Shadow	1983	608-093	—
PC800 Pacific Coast	89-90	—	609-5177
PC800 Pacific Coast	94-98	—	609-5177
CB900C Custom	80-82	608-057	—
CB900F Super Sport	81-82	608-057	—
CBR900RR	93-95	608-1171	609-5171
CBR900RR	96-98	608-1186	609-5186
CB1000	94-95	—	609-5173
CBR1000F Hurricane	87-88	608-1141	609-5141
CB1000R	09-11	608-1073	609-5173
CB1000RA	09-10	608-1073	609-5173
CB1000R	09-11	608-1073	609-5173
CB1000RB	09-10	608-1073	609-5173
CBR1000F Hurricane	90-91	608-1142	—
CBR1000F Hurricane	93-96	608-1172	609-5172
GL1000K Goldwing	75-79	—	609-046
GL1000L Goldwing LTD	1975	—	609-046
VF1000F Interceptor	1984	—	609-5075
CB1100F Super Sport	1983	608-097	609-097
CBR1100XX Blackbird	97-03	—	—
GL1100 Goldwing	80-83	608-067	—
GL1100A Goldwing Aspencade	82-83	608-067	—
GL1100I Goldwing Interstate	80-83	608-067	—
VF1100C V65 Magna	83-86	608-1077	609-5077
VF1100S V65 Sabre	84-85	608-1077	609-5077
VT1100C Shadow 1100	85-90	608-1091	—
GL1200 Goldwing	1984	—	609-5106
GL1200A Goldwing Aspencade	1984	—	609-5106
GL1200A Goldwing Aspencade	85-87	608-1107	609-5106
GL1200I Goldwing Interstate	1984	—	609-5106
GL1200I Goldwing Interstate	85-87	608-1107	609-5106
GL1200L Goldwing LTD	1985	608-1107	609-5106
GL1500 Goldwing	88-90	608-1150	609-5150
GL1500A Goldwing Aspencade	91-99	608-1150	609-5150
GL1500C Valkyrie	97-00	608-1150	609-5150
GL1500C Valkyrie	02-03	608-1150	609-5150
GL1500CD Valkyrie	01-03	608-1150	609-5150
GL1500CF Valkyrie Interstate	99-01	608-1150	609-5150
GL1500CT Valkyrie Tourer	97-00	608-1150	609-5150
GL1500I Goldwing Interstate	91-96	608-1150	609-5150
GL1500SE Goldwing SE	92-00	608-1150	609-5150

Honda ATV

Model	Year	Complete	Top End
TRX70 Fourtrax 70	86-87	608-1060	———
ATC90/K1/K2/K3	70-75	608-045	———
ATC90	76-78	608-045	———
TRX90 Fourtrax 90	93-98	608-1166	———
TRX90 Fourtrax 90	99-01	VG-1195-M	609-5195
TRX90 Sportrax 90	02-13	VG-1195-M	609-5195
ATC110	79-83	608-017	609-0570
ATC110	84-85	608-080	609-0570
ATC125M	1984	608-081	———
ATC125M	86-87	608-1094	———
TRX125 Fourtrax 125	85-86	608-086	———
TRX125 Fourtrax 125	87-88	608-1094	———
ATC185S	81-83	608-063	———
ATC200	81-83	608-063	———
ATC200E Big Red	82-83	608-068	609-5015
ATC200ES Big Red	1984	608-079	609-5015
ATC200M	84-85	608-068	609-5015
ATC200S	84-86	608-065	609-5015
ATC200X	83-85	608-065	609-5015
ATC200X	86-87	———	609-5085
TRX200	1984	608-079	609-5015
TRX200 Fourtrax 200	90-91	———	609-5085
TRX200D Fourtrax 200 Type II	91-97	———	609-5085
TRX200SX Fourtrax 200 SX	86-88	———	609-5085
ATC250ES Big Red	1985	608-088	———
ATC250ES Big Red	86-87	608-090	———
ATC250R	81-84	608-064	609-064
ATC250R	85-86	608-1194	609-5194
ATC250SX	1985	608-088	———
ATC250SX	86-87	608-090	———
FL250 Odyssey	78-84	608-082	———
TRX250 Fourtrax 250	85-87	608-090	———
TRX250 Recon	97-01	608-1184	609-5184
TRX250EX Sportrax 250EX	01-02	608-1203	609-5203
TRX250EX Sportrax 250EX	03-08	608-1204	609-5204
TRX250R Fourtrax 250R	86-89	608-1096	609-5096
TRX250TE Fourtrax Recon ES	02-12	608-1200	609-5200
TRX250TM Fourtrax Recon	02-12	608-1200	609-5200
TRX250X Fourtrax 250X	87-88	608-1095	609-5095
TRX250X Fourtrax 250X	91-92	608-1095	609-5095
TRX250X Fourtrax 250X	09-12	608-1204	609-5204
TRX300 Fourtrax 300	88-98	608-1125	609-5125
TRX300 Fourtrax 300	99-00	———	609-5125
TRX300EX Fourtrax 300EX	93-00	608-1169	609-5095
TRX300EX Sportrax 300EX	01-08	608-1169	609-5095
TRX300X Fourtrax 300X	2009	608-1169	609-5095
TRX300FW Fourtrax 300 4x4	1988	608-1125	609-5125
TRX300FW Fourtrax 300 4x4	90-98	608-1125	609-5125
TRX300FW Fourtrax 300 4x4	99-00	———	609-5125
ATC350X	85-86	608-1061	609-5061
FL350R Odyssey	1985	———	———
TRX350 Fourtrax 4x4	86-87	608-1062	609-5061
TRX350D Fourtrax Foreman 4x4	87-89	608-1062	609-5061
FL400R Pilot	89-90	608-1137	———
TRX400EX Fourtrax 400EX	99-00	608-1192	609-5192
TRX400EX Sportrax 400EX	01-04	608-1192	609-5192
TRX400EX Sportrax 400EX	2005	———	———
TRX400FM Fourtrax Foreman	2002	608-1188	609-5188
TRX400FW Fourtrax Foreman	95-01	608-1188	609-5188
TRX400FW Fourtrax Foreman	2003	608-1188	609-5188
TRX500FA Fourtrax Rubicon	01-12	608-1209	609-5209
TRX500FGA Fourtrax Rubicon	04-08	608-1209	609-5209

Honda Dual Sport & Offroad

CRF50F	04-12	VG-1216-M	VG-5216-M
XR50R	00-03	———	609-5154
Z50R	92-00	———	609-5154
CT70	91-94	608-1155	609-5155
XR70R	97-03	608-1155	609-5155
XR75/K1/K2	73-75	608-050	———

Honda Dual Sport & Offroad

Model	Year	Complete	Top End
XR75	1976	608-050	———
CRF50F	04-12	VG-1216-M	VG-5216-M
XR50R	00-03	———	609-5154
Z50R	92-00	———	609-5154
CT70	91-94	608-1155	609-5155
XR70R	97-03	608-1155	609-5155
XR75/K1/K2	73-75	608-050	———
XR75	1976	608-050	———
XR75	77-78	608-083	609-083
CR80R	1984	———	609-099
CR80R	1986	———	609-5064
CR80R	90-91	608-1131	609-5131
CR80R	92-02	608-1156	609-5156
CRF80F	04-12	VG-1218-M	VG-5218-M
XL80S	80-85	608-083	609-083
XR80	79-84	608-083	609-083
XR80R	85-88	608-083	609-083
XR80R	90-91	608-083	609-083
XR80R	92-02	608-1167	609-5167
CR85R	03-07	608-1202	609-5202
CR85RB	03-07	608-1202	609-5202
CRF100F	04-12	VG-1219-M	VG-5219-M
XL100S	79-85	608-084	———
XR100	81-84	608-084	———
XR100R	85-91	608-084	———
XR100R	92-03	608-1157	609-5157
CR125R	1983	608-076	609-076
CR125R	87-89	608-1113	609-5113
CR125R	90-98	608-1132	———
CR125R	1999	———	609-5190
CR125R	00-02	608-1196	609-5196
CR125R	2003	———	———
CR125R	2004	———	———
CR125R	05-07	———	———
TLR200 Reflex	86-87	608-070	———
XL200R	83-84	608-070	———
XR200 dual rear shock model	80-84	608-070	———
XR200R	81-83	608-070	———
XR200R	1985	608-1083	———
XR200R	86-88	608-070	———
XR200R	90-91	608-1146	———
XR200R	94-02	608-1175	609-5175
CRF230F	03-05	608-1205	609-5205
CR250R	1986	———	609-5066
CR250R	1987	608-1098	609-5098
CR250R	1988	———	609-5133
CR250R	89-91	608-1134	609-5134
CR250R	92-99	608-1158	609-5158
CR250R	00-01	608-1198	609-5198
CR250R	02-04	608-1199	609-5199
CR250R	05-07	VG-1220-M	VG-5220-M
CRF250R	04-07	VG-1224-M	VG-5224-M
CRF250R	08-09	VG-1228-M	VG-5228-M
CRF250X	04-12	VG-1224-M	VG-5224-M
XL250R	85-87	608-1079	609-5079
XR250L	91-96	608-1079	609-5079
XR250R	85-95	608-1079	609-5079
XR250R	96-99	608-1182	609-5182
XR250R	00-04	608-1197	609-5197
XR400R	96-03	608-1183	609-5183
CRF450R	02-07	VG-1201-M	VG-5201-M
CRF450R	09-12	VG-1234-M	VG-5234-M
CRF450X	05-12	VG-1225-M	VG-5225-M
CR500R	87-88	608-1099	———
CR500R	89-01	608-1135	609-5135
XR500	79-80	608-059	———
XL500S Dual Sport	79-81	608-059	———
XR500R	81-82	608-059	———
XR500R	83-84	608-1084	609-5084
XL600R Dual Sport	83-87	608-1081	609-5081

Gasket Sets

Honda Dual Sport & Offroad

Model	Year	Complete	Top End
XR600R	85-87	608-1081	609-5081
XR600R 88-00		608-1120	609-5120
XR650L Dual Sport	93-12	VG-1226-M	609-5122
XR650R	00-07	608-1226	———

Kawasaki Street

Model	Year	Complete	Top End
AR50A1	1982	608-412	———
AR80A1	1982	608-413	———
KZ200A1/A2	78-79	608-624	———
KL250D2-D22 KLR250	85-05	608-4017	609-8017
S1A/B/C-250 (2 stroke triple)	73-75	608-650	———
KH250A5 (2 stroke triple)	1976	608-650	———
S2-350/A (2 stroke triple)	72-73	608-655	———
S3/S3A-400 (2 stroke triple)	74-75	608-656	———
KH400A3/A4/A5 (2 stroke triple)	76-78	608-656	———
KZ400B1/B2	78-79	608-0497	———
KZ400C1	1978	608-0497	———
KZ400H1 LTD	1978	608-0497	———
KZ440A1/A2/A3/A4 LTD	80-83	608-0457	———
KZ440B1/B2	80-81	608-0457	———
KZ440D1/D2/D3/D4/D5 LTD Belt	80-83	608-0457	———
EN500A1-A7 Vulcan 500	90-96	608-4018	———
EN500C1-C10 Vulcan 500 LTD	96-05	608-4018	———
EN500C6F Vulcan 500 LTD	2006	608-4018	———
EX500A1-A7	87-93	608-4018	———
EX500D1/D2/D3 Ninja 500	94-96	608-4018	———
EX500D4-D12 Ninja 500R	97-05	608-4018	———
H1/A/B/C-500	69-72	608-0421	———
H1D/E/F-500 (2 stroke triple)	73-75	608-0431	———
KH500A8 (2 stroke triple)	1976	608-0431	———
KZ550C4 LTD	1983	608-0464	609-0864
KZ550D1 GPz	1981	608-0455	609-0855
KZ550F2 LTD Shaft	1984	———	609-643
KZ550H1/H2 GPz	82-83	608-640	———
ZR550B1/B2/B3 Zephyr	90-92	608-4045	609-8045
ZX550A1/A2/A3 GPz	84-86	———	609-643
ZX600A1/A2/A3 Ninja 600R	85-87	608-4011	609-8011
ZX600C1-C10 Ninja 600R	88-97	608-4011	609-8011
ZX600E1-E10 Ninja ZX-6	93-02	608-4075	609-8075
ZX600E11/E12 ZZR600	03-04	608-4075	609-8075
KL650A1-A19 KLR650	87-05	———	609-8021
KL650B2/B3 Tengai KLR650	90-91	———	609-8021
KL650E8F-ECF KLR650	08-12	VG-4108-M	VG-8108-M
KZ650B1/B2/B2A	77-78	608-0481	609-0881
KZ650B3	1979	608-0482	609-0882
KZ650C1/C2 Custom	77-78	608-0481	609-0881
KZ650C3 Custom	1979	608-0482	609-0882
KZ650D1/D1A SR	1978	608-0481	609-0881
KZ650D2 SR	1979	608-0482	609-0882
KZ650E1 LTD	1980	608-0482	609-0882
KZ650F1	1980	608-0482	609-0882
H2/A-750 (2 stroke triple)	72-73	608-665	———
H2B/H2C-750 (2 stroke triple)	74-75	608-665	———
KZ750E1/E2/E3	80-82	608-0448	———
KZ750F1 LTD Shaft	1983	608-631	609-631
KZ750H1/H2/H3 LTD	80-82	608-0448	———
KZ750H4 LTD	1983	608-631	609-631
KZ750L3	1983	608-631	609-631
KZ750N1/N2 Spectre	82-83	608-631	609-631
ZX750A1/A2/A3 GPz	83-85	608-631	609-631
ZX750F1/F2/F3/F4 Ninja 750R	87-90	608-4031	609-8031
ZX750H1/H2 Ninja ZX-7	89-90	608-4046	609-8046
Z1A/B-900	74-75	608-618	609-0824
KZ900A4/A5	76-77	608-618	609-0824
KZ900B1 LTD	1976	608-618	609-0824
ZL900A1/A2 Eliminator	85-86	———	———
ZX900A1/A2/A3 Ninja 900R	84-86	608-4008	———
KZ1000A1/A2/A2A	77-78	608-0436	609-0836
KZ1000A3/A3A/A4 MKII	79-80	608-619	609-611
KZ1000B1/B2 LTD	77-78	608-0436	609-0836
KZ1000B3/B4 LTD	79-80	608-619	609-611

Kawasaki Street

Model	Year	Complete	Top End
KZ1000C1/C1A Police	1978	608-0436	609-0836
KZ1000C2/C3/C4 Police	79-81	608-619	609-611
KZ1000D1 Z1R	1978	608-0436	609-0836
KZ1000D3 Z1R	1980	608-619	609-611
KZ1000E1/E2 Shaft ST	79-80	———	609-611
KZ1000G1 LTD Classic	1980	608-619	609-611
KZ1000J1/J2/J3	81-83	608-620	609-0839
KZ1000K1/K2 LTD	81-82	608-620	609-0839
KZ1000M1/M2 CSR	81-82	608-620	609-0839
KZ1000P1-P24 Police	82-05	608-620	609-0839
KZ1000R1/R2 Replica	82-83	608-620	609-0839
ZG1000A1-A13 Concours	86-98	608-4009	———
ZG1000A14-A20 Concours	99-05	608-4076	609-8076
ZG1000A6F Concours	2006	608-4076	609-8076
ZL1000A1 Eliminator	1987	———	———
ZX1000A1/A2 Ninja 1000R	86-87	608-4009	———
ZX1000B1/B2/B3 Ninja ZX-10	88-90	608-4032	609-8032
KZ1100A1/A2/A3 Shaft	81-83	608-621	609-0847
KZ1100B1/B2 GPz	81-82	608-621	609-0847
KZ1100D1/D2 Spectre	82-83	608-621	609-0847
KZ1100L1 LTD Shaft	1983	608-621	609-0847
ZN1100B1/B2 LTD Shaft	84-85	608-642	609-642
ZX1100A1/A2 GPz	83-84	608-642	609-642
ZX1100C1/C2/C3 Ninja ZX-11	90-93	608-4047	609-8047
ZX1100D1-D9 Ninja ZX-11	93-01	608-4047	609-8047
ZX1100E1/E2/E3 GPz1100	95-97	608-4047	609-8047
ZX1100F1 GPz1100 (ABS)	1996	608-4047	609-8047
ZG1200B1-B17 Voyager XII	87-03	608-4048	609-8048
KZ1300A1/A2/A3/A4	79-82	608-4010	609-8010
KZ1300B2 Touring	1980	608-4010	609-8010

Kawasaki ATV

KSF80A1/A2/A3 KFX80	03-06	608-3106	VG-7106
KLT110A1/A2/A3	84-86	608-636	———
KLT160A1	1985	608-638	———
KLF185A1/A2/A3/A4 Bayou	85-88	608-639	———
KLT185A1/A2	86-87	608-639	———
KLT200A1/A2/A3/A4/A4A	81-83	608-624	———
KLT200B1	1983	608-625	609-625
KLT200C1/C2	83-84	608-625	609-625
KLF220A1-A15 Bayou 220	88-02	608-4028	———
KSF250A1-A17 Mojave	87-03	608-4022	———
KSF250A18 KFX250 Mojave	2004	608-4022	———
KXF250A1/A2 Tecate 4	87-88	608-4025	———
KXT250B1/B2 Tecate 3	86-87	608-4002	———
KEF300A1-A6 Lakota 300	95-00	608-4029	609-8029
KEF300B1/B2/B3 Lakota Sport	01-03	608-4029	609-8029
KLF300B1-B17 Bayou 300	88-04	608-4029	609-8029
KLF300C1-C16 Bayou 4x4	89-04	608-4030	609-8029
KVF300A1-A4 Prairie 300 4x4	99-02	VG-4074-M	VG-8074-M
KVF300 B1-B4 Prairie 300	99-02	VG-4074-M	VG-8074-M
KVF360A1/A2/A3 Prairie 360 4x4	03-05	VG-4083-M	VG-8083-M
KVF360B1-B9F Prairie 360	03-09	VG-4083-M	VG-8083-M
KVF360A6F-ACF	06-12	VG-4083-M	VG-8083-M
KVF360C6F-CAF Hardwoods	06-10	VG-4083-M	VG-8083-M
KVF360CAF-CBF Realtree	10-11	VG-4083-M	VG-8083-M
KLF400B1-B7 Bayou 4x4	93-99	608-4056	———
KSF400A1-A6F KFX400	03-06	VG-4085-M	VG-8085-M

Kawasaki Dual Sport & Offroad

KX60A1/A2	83-84	———	609-634
KX60B1-B19	85-03	608-4000	———
KX65A1/A2/A3/A4/A5/A6	00-05	608-4078	609-8078
KX65A6F-AD	06-13	———	609-8078
KX80G1/G2	86-87	———	609-8004
KX80J2	1987	———	609-8004
KX80L1/L2	88-89	608-4024	———
KX80N1/N2 Big Wheel 80	88-89	608-4024	———
KX80R1-R7	91-97	608-4034	609-8034

Kawasaki Dual Sport & Offroad

Model	Year	Complete	Top End
KX80T1-T4	91-94	608-4034	609-8034
KX80W1/W2/W3	98-00	608-4069	609-8069
KX85A1/A2/A3/A4/A5	01-05	608-4079	609-8079
KX85A6F-ACF	06-12	———	609-8079
KX100B5/B6/B7	95-97	608-4055	609-8055
KX100C1/C2/C3	98-00	608-4070	609-8070
KX100D1/D2/D3/D4/D5	01-05	608-4070	609-8070
KX100D6F-DCF	06-12	———	609-8070
KX125/A/A3	74-76	608-645	———
KX125F1/G1	88-89	608-4035	609-8035
KX125H1/H2	90-91	608-4036	———
KX125K1	1994	608-4057	———
KX125K2/K3/K4	95-97	608-4062	———
KX125K5/L1	98-99	608-4065	609-8065
KDX200E1-E6	89-94	608-4040	609-8040
KDX200H1-H11	95-06	608-4064	609-8064
KDX200H6F	2006	608-4064	609-8064
KDX220A4-A12	97-05	608-4071	609-8071
KDX250B2/B3/B4	91-93	———	609-630
KDX250D1/D2/D3	91-93	608-4059	———
KL250D2-D22 KLR250	85-05	608-4017	609-8017
KX250B1	1982	———	609-630
KX250D1/D2	85-86	608-4002	———
KX250F1/G1	88-89	608-4042	609-8042
KX250H1/H2	90-91	608-4043	609-8043
KX250J1	1992	608-4051	609-8043
KX250J2	1993	———	609-8054
KX250K1	1994	608-4058	609-8054
KX250K2/K3	95-96	608-4063	609-8063
KX250K4/K5	97-98	608-4066	609-8063
KX250L1/L2	99-00	608-4066	609-8063
KX250M1/M2	01-02	608-4077	609-8077
KX500A1/A2	83-84	608-641	———
KX500B2/C1	86-87	608-4007	———
KX500E1-E16	89-04	608-4026	609-8026
KL650A1-A19 KLR650	87-05	———	609-8021
KL650B2/B3 Tengai KLR650	90-91	———	609-8021
KLR650E8F-ECF KLR650	08-12	VG-4108-M	VG-8108-M

Suzuki Street

Model	Year	Complete	Top End
SP100D Dual Sport	1983	608-0396	———
DR200SET/V/W/X/Y	96-00	———	609-7117
DR250SL Dual Sport	1990	608-3072	———
DR250SM/SN Dual Sport	91-92	608-3080	609-7080
DR250SEP/SER Dual Sport	93-94	608-3086	609-7086
DR250SES Dual Sport	1995	608-3107	609-7086
DR350SL Dual Sport	1990	608-3073	———
DR350SM/SN/SP Dual Sport	91-93	608-3077	609-7077
DR350SER Dual Sport	1994	608-3111	609-7104
DR350SES/T/V/W/X Dual	95-99	608-3111	609-7104
GT380 J/K/L/M/A/B Sebring	72-77	———	———
GS400	77-78	608-0366	———
GS400B/XB/C/XC	77-78	———	———
GS450ET/EX/EZ	80-82	———	———
GS450LT/LX	80-81	———	———
GS450ST/SX	80-81	———	———
GS450TX	1981	———	———
GS500EK/EL/EM/EN	89-92	608-3074	609-7074
GS500EP/ER/ES	93-95	608-3074	609-7074
T500R/J/K/L/M Titan	71-75	608-0329	———
GT500A/B	76-77	608-0329	———
GS550B/C/EC/N/EN/ET	77-80	608-0345	———
GS550LN/LT/LX/LZ	79-82	608-0345	———
GSF600ST/SV Bandit	96-97	608-3097	———
GSF600SW/SX/SY Bandit	98-00	608-3128	609-7128
GSF600SK1/SK2/SK3 Bandit	01-03	608-3128	609-7128
GSX600FJ/FK/FL Katana	88-90	608-3044	———
GSX600FM/FN/FP Katana	91-93	608-3097	———
GSX600FR/FS Katana	94-95	608-3097	———
GSX600FT/FV Katana	96-97	608-3097	———
GSX600FW/FX/FY Katana	98-00	608-3128	609-7128

Suzuki Street

Model	Year	Complete	Top End
GSX600FK1/FK2/FK3 Katana	01-03	608-3128	609-7128
GSX600FK4-K6 Katana	04-06	608-3128	609-7128
GSX-R600V/W/X/Y	97-00	———	———
DR650SL/SM/SN/SP Dual	90-93	608-3082	———
DR650SER/SES Dual Sport	94-95	608-3082	———
LS650FG/FH Savage	86-87	608-3049	———
LS650PG/PH/PJ Savage	86-88	608-3049	———
LS650PS-PK4	95-04	608-3049	———
GS750ET/EX	80-81	———	609-0759
GS750EZ	1982	———	———
GS750ED/ESD	1983	608-3003	609-7003
GS750LT/LX	80-81	———	609-0759
GS750TZ/TD	82-83	———	———
GS750SD Katana	1983	608-3002	609-7002
GSX750FK Katana	1989	608-3045	———
GSX750FL/FM/FN/FP Katana	90-93	608-3060	609-7060
GSX750FR/FS/FT/FV Katana	94-97	608-3060	609-7060
GSX750FW/FX/FY Katana	98-00	608-3129	609-7129
GSX750FK1/FK2/FK3 Katana	01-03	608-3129	609-7129
GSX750FK4-K6 Katana	04-06	608-3129	609-7129
GSX-R750G	1986	608-3021	———
GSX-R750J/K	88-89	608-3045	———
GSX-R750L	1990	———	609-7061
GSX-R750M/N	91-92	608-3083	———
GSX-R750WP/WR/WS	93-95	608-3098	609-7098
GSX-R750T/V/W/X	96-99	———	———
VS750GLPJ/K/L/M Intruder	88-91	———	609-7064
GS850GN/GT/GX	79-81	608-440	———
GS850GZ/GD	82-83	———	———
GS850GLT/GLX	80-81	608-440	———
GS850GLZ/GLD	82-83	———	———
RF900RR/RS/RT/RV	94-97	608-3115	———
RF900RZS	1995	608-3115	———
GS1000C/EC/N/EN/ET	78-80	608-0352	———
GS1000LN	1979	608-0352	———
GS1000SN/ST	79-80	608-0352	———
GS1100ET/EX	80-81	608-421	———
GS1100EZ	1982	608-0380	———
GS1100ED/ESD	1983	608-429	———
GS1100GZ/GD	82-83	608-430	———
GS1100GLZ/GLD	82-83	608-430	———
GS1100GKZ/GK2/GKD/GKE	82-84	608-430	———
GS1100LT	1980	608-421	———
GS1100SD Katana	1983	608-429	———
GSX1100FJ/FK/FL Katana	88-90	608-3062	609-7062
GSX1100FM/FN Katana	91-92	608-3076	609-7076
GSX1100GM/GN Shaft	91-92	608-3085	609-7085
GSX-R1100G/H	86-87	608-3024	609-7024
GSX-R1100J	1988	608-3046	609-7046
GSX-R1100K/L/M/N	89-92	608-3063	609-7063
GSX-R1100WP/WR/WS	93-95	608-3099	609-7099
GSX-R1100WT/WV/WW	96-98	608-3099	609-7099
GS1150ES3/ESE/EF/ESF/EF2	83-85	608-3027	———
GSF1200SV/SW/SX/SY Bandit	97-00	608-3124	609-7124
GSF1200SK1/SK2 Bandit	01-02	608-3124	609-7124
VS1400GLFH Intruder	1987	608-3065	———
VS1400GLPH/GLPJ Intruder	87-88	608-3065	———
VS1400GLPL/M/N/P/R/S	90-95	608-3065	———
VS1400GLPT/V/W/X/Y	96-00	608-3065	———
VS1400GLPK1/K2/K3 Intruder	01-03	608-3065	———

Suzuki ATV

Model	Year	Complete	Top End
ALT50D/E	83-84	608-0392	609-0792
LT50E/F/G/H/J/K/L Quadrunner	84-90	608-0392	609-0792
LT-A50K2/K3/K4/K5	02-05	608-3131	609-7131
LT80H/J/K/L/M/N/P/R Quadrunner	87-94	608-3048	609-7048
LT80S/T/V/W/X/Y Quadrunner	95-00	608-3106	609-7106
LT80K1/K2/K3/K4 Quadrunner	01-04	608-3106	609-7106
ALT125D/E/F/G	83-86	608-423	———
LT125D/E/F/G/H	83-87	608-423	———

Gasket Sets

Suzuki ATV

Model	Year	Complete	Top End
LT160EK/EL/EM/EN	89-92	608-3092	609-7092
LT-F160M/N/P/R/S/T/V	91-97	608-3092	609-7092
LT-F160W/X/Y/K1 Quadrunner	98-01	608-3092	609-7092
LT-F160K3	2003	608-3092	609-7092
ALT185E/F	84-85	608-435	———
LT185E/F/G/H	84-87	608-435	———
LT-F230G/H	86-87	608-436	———
LT230EH/EJ/EK/EL	87-90	608-436	———
LT230EM/EN/EP	91-93	608-436	———
LT230GEF/GEG	85-86	608-436	———
LT230SF/SG/SH/SJ	85-88	608-3015	———
LT-4WDH/J/K/L Quadrunner	87-90	608-3025	609-7025
LT-4WDM/N P/R Quadrunner	91-94	608-3025	609-7025
LT-4WDS Quadrunner	1995	608-3110	609-7025
LT-4WDT/V/W Quadrunner	96-98	608-3108	609-7108
LT-F250J/K/L/M/N/P/R	88-94	608-3025	609-7025
LT-F250S/T/V/W/X/Y/K1	95-01	608-3108	609-7108
LT-F250F X-K2	99-02	608-3108	609-7108
LT-F250K2-K9/L0/L1/L2 Ozark	02-12	VG-3136-M	VG-7136-M
LT250EFF/EFG	85-86	608-438	———
LT250RF/RG Quad Racer	85-86	608-439	609-7017
LT250RH/RJ/RK Quad Racer	87-89	608-3057	609-7057
LT250RL/RM/RN Quad Racer	90-92	608-3057	609-7057
LT-F4WDXM/N/P King Quad	91-93	608-3095	609-7095
LT-F4WDXR/S/T/V/W	94-98	608-3109	609-7109
LT-Z400K3-K9/L0/L1/L2 Quadsport	03-12	VG-4085-M	VG-8085-M
LT500RJ/RK/RL Quadracer	88-90	608-3066	609-7066
LT-F500F W-K2 Quadrunner	98-02	608-3127	609-7127
LT-F500F K3-K7Vinson 4WD	03-07	608-3127	609-7127

Suzuki Dual Sport & Offroad

JR50C/N/T/X/Z/D/E/F/G/H/J	78-88	———	609-0792
JR50K/L/M/N/P/R/S/T/V/W/X/Y	89-00	———	609-0792
JR50 K1-K6	01-06	———	609-0792
RM80G/H/J	86-88	608-3038	———
RM80K	1989	608-3047	———
RM80L	1990	———	———
RM80M/N/P/R/S/T/V	91-97	608-3068	609-7068
RM80W/X/Y/K1	98-01	608-3068	609-7068
DR100D/E/F/G/H/J/K/L	83-90	608-0396	———
SP100D Dual Sport	1983	608-0396	———
RM125G	1986	608-3031	———
RM125K	1989	608-3052	———
RM125L	1990	608-3053	609-7053
RM125M	1991	———	609-7069
RM125N/P/R/S/T	92-96	608-3078	609-7078
RM125V	1997	———	609-7118
RM125W/X/Y	98-00	608-3125	———
RM125K1/K2/K3	01-03	608-3133	———
RM125 K4-K9	04-09	608-3134	609-7134
DR200SET/V/W/X/Y	96-00	VG-3117-M	609-7117
DR200SEK1-SEK9	01-09	VG-3117-M	609-7117
DR250SL Dual Sport	1990	608-3072	———
DR250SM/SN Dual Sport	91-92	608-3080	609-7080
DR250SEP/SER Dual Sport	93-94	608-3086	609-7086
DR250SES Dual Sport	1995	608-3107	609-7086
DR-Z250K1-K7	01-07	VG-3150-M	VG-7150-M
RM250E/F	84-85	608-3020	609-7020
RM250K	1989	608-3055	609-7055
RM250L	1990	608-3056	609-7055
RM250M	1991	608-3071	609-7071
RM250N/P	92-93	608-3081	609-7081
RM250R/S/T/V	94-95	608-3094	609-7094
RM250W	1998	608-3126	609-7126
RM250X/Y	99-00	608-3130	609-7130
RM250 K1-K9	01-09	608-3132	609-7132
RMX250P/R/S/T	93-96	608-3103	609-7103
RMX250V/W	97-98	608-3120	609-7103
RM-Z250K5/K6	05-06	VG-3149-M	VG-7149-M

Suzuki Dual Sport & Offroad

Model	Year	Complete	Top End
RM-Z250K7/K8/K9	07-09	VG-3154-M	VG-7154-M
DR350SL Dual Sport	1990	608-3073	———
DR350SM/SN/SP Dual Sport	91-93	608-3077	609-7077
DR350SER Dual Sport	1994	———	609-7104
DR350SES/T/V/W/X Dual Sport	95-99	608-3111	609-7104
RM500D	1983	608-426	———
DR650SL/SM/SN/SP Dual	90-93	608-3082	———
DR650SER/SES Dual Sport	94-95	608-3082	———

Yamaha Street

YSR50T/U/W/A/B/D	87-92	608-2057	———
TW200U/UC/W/WC/A/AC	88-90	———	609-6088
TW200B/BC/-H/HC Trailway	91-96	———	609-6088
TW200 J/JC-P/PC Trailway	97-02	———	609-6129
XT225D/DC-P/PC Serrow	92-02	608-2077	609-6076
RD350/A/B	73-75	608-0251	609-205
RZ350L/N/NC/NCII	84-85	608-255	———
XT350N/NC-B/BC Dual Sport	85-91	———	609-6062
XT350D/DC-M/MC Dual Sport	92-00	608-2113	609-6113
FZR400U/SUC/W/SWC/A/SAC	88-90	608-2091	———
RD400C/D/E/F	77-79	608-0261	———
SR500E/F/G/H	78-81	608-231	609-231
XT500C/D/E/F/G Dual Sport	76-81	608-231	609-231
XV500K Virago	1983	———	609-6023
XV535T/TC/U/UC Virago	87-88	608-2078	———
XV535E/EC-J/JC Virago	93-97	608-2078	———
XV535SF/SFC-SJ/SJC Virago	94-97	608-2078	———
XV535K/KC/L/LC/M/MC	98-00	———	———
XJ550H/J/K Maxim	81-83	608-253	609-253
XJ550RH/RJ/RK Seca	81-83	608-253	609-253
XT550J/K Dual Sport	82-83	608-240	———
XZ550RJ Vision	1982	608-2025	———
FJ600L/LC/N/NC	84-85	———	———
FZ600S/SC/T/TC/U/UC	86-88	———	———
FZR600W/WC/AC	89-90	608-2092	———
FZR600RA/RAC-RL/RLC	90-99	608-2092	———
SRX600S/SC	1986	608-254	609-254
XJ600SD/SDC-SK/SKC Seca II	92-98	———	609-6115
XT600L/LC Dual Sport	1984	608-254	609-254
XT600T/TC Dual Sport	1987	608-254	609-254
XT600EA/EAC/EB/EBC/ED/EDC	90-92	608-2080	609-6080
YX600S/SC/T/TC/U/UC Radian	86-88	608-2063	———
YX600W/WC/A/AC Radian	89-90	608-2063	———
XJ650G/H Maxim	80-81	608-2016	609-6016
XJ650LH Midnight Maxim	1981	608-2016	609-6016
XJ650LJ/LK Seca Turbo	82-83	608-2017	609-6017
XJ650RJ Seca	1982	608-2016	609-6016
XS650B/C/D/E/F	75-79	608-0282	———
XS650G/H Special II	80-81	608-0282	———
XS6502F	1979	608-0282	———
XS650SE/SF/SG/SH Special	78-81	608-0282	———
XS650SJ/SK Heritage Special	82-83	608-251	609-251
FZ700T/TC	1987	608-2064	609-6064
FZ750N/S/SC	85-86	608-2064	609-6064
FZ750U/UC	1988	608-2064	609-6064
FZR750RT/RU	87-88	608-2064	609-6064
XJ750J/K Maxim	82-83	608-2014	———
XJ750MK Midnight Maxim	1983	608-2014	———
XJ750RH/RJ/RK Seca	81-83	608-2014	———
XV750H/J/K Virago	81-83	608-249	609-249
XV750MK Midnight Virago	1983	608-249	609-249
XV750U/UC/W/WC Virago	88-89	608-2081	———
XV750A/AC/B/BC/D/DC Virago	90-92	608-2081	———
YZF750RF/RFC	1994	———	609-6122
YZF750RH/RHC/RJ/RJC/RK/RKC	96-98	———	609-6122
XS850G/H	80-81	608-2000	———
XS850LG/LH Midnight Special	80-81	608-2000	———
XS850SG/SH Special	80-81	608-2000	———
XV920J/K Virago	82-83	608-248	———
XV920MK Midnight Virago	1983	608-248	———
XV920RH/RJ Virago	81-82	608-248	———
FZR1000U/UC	1988	———	609-6082

Yamaha Street

Model	Year	Complete	Top End
FZR1000W/WC/A/AC/B/BC	89-91	608-2094	———
FZR1000D/DC/E/EC	92-93	608-2118	609-6118
FZR1000F/FC/G/GC	94-95	608-2118	609-6118
GTS1000AE/AEC/AF/AFC	93-94	608-2118	609-6118
XV1000L/LC/N/NC Virago	84-85	608-2050	———
FJ1100L/LC/N/NC	84-85	608-2056	———
XJ1100J Maxim	1982	608-0297	———
XS1100E/F/G/H	78-81	608-250	609-250
XS1100LG/LH Midnight Special	80-81	608-250	609-250
XS1100SF/SG/SH Special	79-81	608-250	609-250
XV1100U/UC-F/FC Virago	88-94	608-2050	———
XV1100G/GC/H/HC/J/JC Virago	95-97	608-2123	———
XV1100K/KC/L/LC Virago	98-99	608-2123	———
XV1100SH/SHC/SJ/SJC Virago	96-97	608-2123	———
XV1100SK/SKC Virago	1998	608-2123	———
FJ1200S/SC/T/TC	86-87	———	———

Yamaha ATV

YFM80N/S/T/U Moto-4	85-88	608-2074	609-6074
YFM80D/E/F/G/H/J/K Badger	92-98	608-2074	609-6074
YFM80L/M/MC/N/NC Badger	99-01	608-2074	609-6074
YFM200N Moto-4	1985	608-238	———
YFM200DXS/DXT Moto-4	86-87	608-2089	609-6089
YFM200DXU/DXW Moto-4	88-89	608-2089	609-6089
YFS200U-P Blaster	88-02	608-2095	609-6095
YFS200R/S/T/V	03-06	VG-2145	VG-6145
YFS200SEV	2006	VG-2145	VG-6145
YTM200EK/EL/ERN	83-85	608-238	———
YFM225S/T/U Moto-4	86-88	———	609-6076
YTM225DRN Tri-Moto	1985	608-239	———
YTM225DRS Tri-Moto	1986	———	609-6076
YTM225DXK/DXL/DXN Tri-Moto	83-85	608-239	———
YTZ250N/S Tri-Z	85-86	608-2058	———
YFM350ERT-ERA Moto-4	87-90	608-2060	609-6060
YFM350ERD Moto-4	1992	608-2060	609-6060
YFM350ERE/ERF/ERG Moto-4	93-95	608-2107	609-6107
YFM350FHL/FHLC Wolverine	1999	608-2139	609-6107
YFM350FWT/U/W/A/B Big Bear	87-91	608-2060	609-6060
YFM350FWD-FWJ Big Bear	92-97	608-2107	609-6107
YFM350FWBJ/FWBK Big Bear	97-98	608-2125	———
YFM350FWBKC Big Bear	1998	608-2125	———
YFM350FWBL/FWBLC Big Bear	1999	608-2139	609-6107
YFM350FXG-FXK Wolverine	95-98	608-2125	———
YFM350UH/UJ/UK Big Bear	96-98	608-2107	609-6107
YFM350UL/ULC Big Bear	1999	608-2139	609-6107
YFM350XT/XU/XW/XA/XB Warrior	87-91	608-2060	609-6060
YFM350XD-XP/XPC Warrior	92-04	608-2107	609-6107
YFM350 S-V Raptor 350	04-06	VG-2147	VG-6147
YFM350R T-Y Raptor 350	05-09	VG-2147	VG-6147
YFP350U Terapro	1988	———	609-6060
YFZ350T/U/W/A/B Banshee	87-91	608-2059	609-6059
YFZ350D-P Banshee	92-02	608-2141	609-6141
YFZ350R/S/T/V Banshee	03-09	VG-2148	VG-6148
YFZ350LER/LES Banshee	03-04	VG-2148	VG-6148
YFZ350RB Banshee	2003	VG-2148	VG-6148
YFM400FM/FMC Big Bear 4WD	2000	608-2139	609-6107
YFM400FP Big Bear 4WD Realtree	2002	608-2139	609-6107
YFM400FWR Big Bear	2003	608-2139	609-6107
YFM400FHM Big Bear	2000	608-2139	609-6107
YFM400FHP Big Bear 400	2002	608-2139	609-6107
YFM400FWR Big Bear	2003	608-2139	609-6107
YFM400FWNM/MC Big Bear 4WD	2000	608-2139	609-6107
YFM400FWE/F/G/H/J/K Kodiak	93-98	608-2107	609-6107
YFM400FWNM/MC Big Bear 4WD	2000	608-2139	609-6107
YFM400FWNN Big Bear 4WD	2001	608-2139	609-6107
YFM400FWNHN Big Bear Buckmaster 4WD	2001	608-2139	609-6107
YFM400NM/NMC/N Big Bear 2W	01-02	608-2139	609-6107
YFM400NRBig Bear 2WD	2003	608-2139	609-6107
YFM400NHN Big Bear 2WD	2001	608-2139	609-6107
YFM400FS/FT/FV Big Bear 4x4	04-06	608-2139	609-6107
YFM400F S-T Big Bera 4x4	10-12	608-2139	609-6107

Yamaha Dual Sport & Offroad

Model	Year	Complete	Top End
PW50H/J/K Y-Zinger	81-83	608-2021	———
PW50N Y-Zinger	85-86	608-2021	———
PW50A-B Y-Zinger Mini	90-12	608-2021	———
TT-R50E V-B	06-12	VG-2149	VG-6149
YZ60H/J/K	81-83	608-252	609-252
PW80G/H/J/K1/L/M1/N1/P	95-02	608-2022	609-6022
YZ80	87-92	608-2070	609-6070
YZ80	93-01	608-2104	609-6104
YZ85 P-A	02-11	VG-2149	VG-6149
TT-R125 M/ML-S	00-04	VG-2163	VG-6163
TT-R125 S-W	04-07	VG-2163	VG-6163
TT-R125X/Y	08-09	VG-2171	VG-6171
TT-R125L M-V	00-06	VG-2163	VG-6163
TT-R125L X	2008	VG-2171	VG-6171
TT-R125LE S-W	04-07	VG-2163	VG-6163
TT-R125LE X-B	08-12	VG-2171	VG-6171
YZ125W	1989	608-2071	———
YZ125B	1991	———	609-6098
YZ125D1	1993	608-2102	609-6102
YZ125F1/G1/H1/J1	94-97	608-2119	609-6119
YZ125K1	1998	VG-2133	609-6133
YZ125L1/M1/N1/P/R/S1	99-04	608-2138	609-6133
YZ125 T-B1	05-12	VG-2161	VG-6161
TW200U/UC/-H/HC Trailway	88-96	———	609-6088
TW200 J/JC-B1 Trailway	97-12	———	609-6129
TT225S/T	86-87	608-2077	609-6076
TT-R225L/LC/M/MC/N/NC	99-01	———	609-6130
XT225D/DC-H/HC Serrow	92-96	608-2077	609-6076
XT225J/JC-W/WC Serrow	97-07	———	609-6130
IT250H/J/K	81-83	608-246	———
YZ250U/W	88-89	———	609-6072
YZ250G1	1995	608-2124	609-6124
YZ250H1	1996	608-2126	609-6124
YZ250J1	1997	608-2131	———
YZ250K1	1998	608-2134	609-6134
XT350N/NC-A/AC Dual Sport	85-91	———	609-6062
XT350D/DC-M/MC Dual Sport	92-00	608-2113	609-6113
IT490K	1983	608-247	———
YZ490J/K	82-83	608-247	———
TT500C/D/E/F/G/H	76-81	608-231	609-231
WR500ZD	1992	608-2114	609-6114
XT500C/D/E/F/G/H Dual Sport	76-81	608-231	609-231
XT550J/K Dual Sport	82-83	608-240	———
XT600L/LC Dual Sport	1984	608-254	———
XT600T/TC Dual Sport	1987	608-254	———
XT600EA/EAC/EB/EBC/ED/EDC	90-92	608-2080	609-6080

Gasket Sets

650-001

650-005

K&S Engine Gasket Sets

Quality gasket sets from K&S International available in complete and top end sets.

Suzuki ATV

Model	Year	Complete	Top End
LT250RJ/RK/RL Quadracer	88-92	608-970	609-970
LT500RH/RJ/RK/RL/RM Quadracer	88-90	608-971	———

KTM

50 Mini Adventure	02-03	608-933	———
50 SXR Adventure	97-99	608-931	———
50 SX/SXR Pro	97-01	608932	———
50 SXPro Jr.	01-03	608-934	———
60 SX	98-00	608-935	———
125 EXC/MXC/SX	98-03	608-936	———
200 EXC/MXC/SX	98-03	608-937	———

Yamaha ATV & Offroad

YFS200 U-V Blaster	88-07	608-928	———
YZ250	99-04	608-926	609-926
YFZ350 Banshee	87-06	608-929	———
YFM660RN/RNC/RP/RPB Raptor	01-02	608-927	———
YFM660R N/RRC/RS/RT Raptor	01-05	608-927	———
YFM660RLER/RLES	03-04	608-927	———
Raptor 660R Limited Edition Blk			
YFM660RSET Raptor SE	2005	608-927	———

Cylinder Head O-Rings

Kawasaki models. Sold each. ***Made in Japan.***

Kawasaki

OEM Ref. 92055-062 — **Order No.** 650-001

Model	Year
Z1/A/B-900	73-75
KZ900A4/A5	76-77
KZ900B1 LTD	1976
KZ1000A1/A2	77-78
KZ1000A3/A3A/A4 MKII	79-80
KZ1000B1/B2/B3/B4 LTD	77-80
KZ1000C1/C1A/C2/C3/C4 Police	78-81
KZ1000D1 Z1R	1978
KZ1000D3 Z1R	1980
KZ1000E1/E2 Shaft ST	79-80
KZ1000G1 LTD Classic	1980

OEM Ref. 11009-1208 — **Order No.** 650-005

Model	Year
KZ1000J1/J2/J3	81-83
KZ1000K1/K2 LTD	81-82
KZ1000M1/M2 CSR	81-82
KZ1000P1-P21 Police	82-02
KZ1000P24 Police	2005
KZ1000R1/R2 Replica	82-83
KZ1100A1/A2/A3 Shaft	81-83
KZ1100B1/B2 GPz	81-82
KZ1100D1/D2 Spectre	82-83
KZ1100L1 LTD	1983
ZN1100B1/B2 LTD Shaft	84-85
ZX1100A1/A2 GPz	83-84

644-1022

645-1028

Vesrah Base & Head Gaskets

Replacement base and head gaskets for applications listed. Sold each. ***Made in Japan.***

Honda Street

Model	Year	Base Gskt	Head Gskt
CB600F (599)	2006	—	644-1096
CBR600F3 Hurricane	95-98	—	644-1096
CBR600SE Hurricane	1998	—	644-1096
CBR600SJ Replica	1996	—	644-1096
NT650 Hawk GT	88-91	—	644-1073
NX650	88-89	—	644-1081
VFR700F Interceptor	1986	—	644-1047
VFR700F2 Interceptor	86-87	—	644-1047
CB750 Nighthawk	91-03	—	644-1099
CB750A Automatic	76-78	645-1028	644-1022
CB750C Custom	80-82	—	644-1023
CB750F Super Sport	75-76	645-1028	—
CB750F Super Sport	79-82	—	644-1023
CB750/K1/K2/K3/K4/K5	69-75	645-1028	—
CB750K	76-78	645-1028	644-1022
CB750K	79-82	—	644-1023
CB750L LTD	1979	—	644-1023
CB750SC Nighthawk	82-83	—	644-1023
VF750C Magna	94-03	—	644-1078
VF750C2 Magna	97-00	—	644-1078
VF750CD Magna Deluxe	95-96	—	644-1078
VFR750F Interceptor	1986	—	644-1047
VFR750F	90-97	—	644-1078
VFR1000F Interceptor	1984	—	644-1063
VFR1000R	1985	—	644-1063
VF1100C V65 Magna	83-86	—	644-1065
VF1100S V65 Sabre	84-85	—	644-1065

Honda ATV

Model	Year	Base Gskt	Head Gskt
ATC185	1980	—	644-1028
ATC185S	81-83	—	644-1028
ATC200	81-83	—	644-1028
ATC200E	82-83	—	644-1028
ATC200ES	1984	—	644-1028
ATC200M	84-85	—	644-1028
ATC200S	84-86	—	644-1028
ATC200X	83-85	—	644-1028
ATC200X	86-87	—	644-1035
TRX200 Fourtrax	1984	—	644-1028
TRX200 Fourtrax 200	90-91	645-1058	644-1035
TRX200D Fourtrax Type II	91-97	645-1058	644-1035
TRX200SX Fourtrax	86-88	645-1058	644-1035
ATC250ES	85-86	645-1026	644-1020
ATC250ES	1987	—	644-1020
ATC250R	85-86	645-1025	644-1008
ATC250SX	85-86	645-1026	644-1020
TRX250 Fourtrax 250	85-87	645-1026	644-1020
TRX250R Fourtrax 250R	86-89	645-1025	644-1044
TRX250X	87-88	—	644-1042
TRX300 Fourtrax 300	88-00	645-1026	644-1020
TRX300EX Fourtrax 300EX	93-00	—	644-1042
TRX300EX Sportrax 300EX	01-08	—	644-1042
TRX300FW Fourtrax 300 4x4	1988	645-1026	644-1020
TRX300FW Fourtrax 300 4x4	90-00	645-1026	644-1020
ATC350X	85-86	—	644-1027
FL350R Odyssey	1985	—	644-1045

Honda ATV

Model	Year	Base Gskt	Head Gskt
TRX350 Fourtrax 4x4	86-87	—	644-1027
TRX350D Fourtrax Foreman 4x4	87-89	—	644-1027
TRX400EX Fourtrax 400EX	99-00	645-1061	—
TRX400EX Sportrax 400EX	01-12	645-1061	—

Honda Dual Sport & Offroad

CRF50	04-09	—	644-1084
XR50R	00-03	—	644-1084
Z50R	92-00	—	644-1084
CRF70	04-09	—	644-1087
XR70R	97-03	—	644-1087
CT70	91-94	—	644-1087
CR80R	86-91	—	644-1025
CR80R	92-02	645-1055	644-1085
CR80RB	00-02	645-1055	644-1085
CRF80	04-12	—	644-1086
XR80R	93-03	—	644-1086
CRF100	04-09	—	644-1088
XR100R	92-03	—	644-1088
CR125R	1986	—	644-1026
CR125R	90-99	645-1057	644-1089
XL185S	79-83	645-1051	—
XR185	1979	645-1051	—
TLR200 Reflex	86-87	645-1051	—
TR200 Fatcat	86-87	645-1058	644-1035
XL200R	83-84	645-1051	644-1028
XR200	80-84	645-1051	644-1028
XR200R	81-83	645-1051	644-1028
XR200R	84-85	645-1008	644-1028
XR200R	86-88	645-1051	644-1028
XR200R	90-91	645-1051	644-1028
XR200R	94-02	645-1059	—
CR250R	1984	645-1009	—
CR250R	89-91	—	644-1083
CR250R	92-01	645-1060	644-1092
CR250R	05-07		HG-1105
XL250S	78-81	—	644-1009
XL250R	82-83	—	644-1009
XL250R	84-87	645-1008	644-1039
XR250	79-80	—	644-1009
XR250L	91-96	645-1008	644-1039
XR250R	81-82	—	644-1009
XR250R	84-95	645-1008	644-1039
XR250R	96-04	645-1008	644-1039
XR400R	96-01	645-1061	644-1094
CR500R	1984	645-1014	644-1012
CR500R	85-86	645-1032	644-1010
CR500R	89-01	645-1062	644-1095
XR500R	83-84	645-1017	—
XL600R	83-87	645-1017	644-1040
XR600R	85-87	645-1017	644-1040
XR600R	88-00	645-1017	644-1097
XR650L	93-12	645-1017	644-1081

Base & Head Gaskets

609-880

Kawasaki Street

(Requires qt 2 for applications in red - Street only)

Model	Year	Base Gskt	Head Gskt
EN450A1-A6 LTD 454	85-90	645-4029	644-4030
EN500A1-A7 Vulcan 500	90-96	645-4029	644-4030
EN500C1-D9F Vulcan 500 LTD	96-09	645-4029	644-4030
EX500A1-A7	87-93	645-4029	644-4030
EX500D1/D2/D3 Ninja 500	94-96	645-4029	644-4030
EX500D4-D9F Ninja 500R	97-09	645-4029	644-4030
ZL600A1/A2 Eliminator	86-87	645-4034	644-4035
ZL600B2/B3 Eliminator 600	96-77	645-4034	644-4035
ZX600A1/A2/A3 Ninja 600R	85-87	645-4034	644-4035
ZX600B1 Ninja 600RX	1987	645-4034	644-4035
ZX600C1-C10 Ninja 600R	88-97	645-4034	644-4035
KZ650H1/H2/H3 CSR	81-83	645-4013	———
KZ700A1	1984	645-4013	———
ZN700A1/A2 LTD Shaft	84-85	645-4013	———
KZ750E1/E2/E3	80-82	645-4013	644-4015
KZ750F1	1983	645-4013	644-4015
KZ750H1/H2/H3/H4 LTD	80-83	645-4013	644-4015
KZ750L3	1983	645-4013	644-4015
KZ750N1/N2 Spectre	82-83	645-4013	644-4015
KZ750R1 GPz	1982	645-4013	644-4015
ZR750C1/C2/C3	91-92	645-4013	———
ZX750A1/A2/A3 GPz	83-85	645-4013	644-4015
ZX750E1/E2 GPz Turbo	84-85	645-4013	———
–Z1900 (1 piece head gasket)	1973	645-4022	609-880
Z1A/B-900	74-75	645-4022	644-4021
KZ900A4/A5	76-77	645-4022	644-4021
KZ900B1 LTD	1976	645-4022	644-4021
ZL900A1/A2 Eliminator	85-86	645-4041	———
ZX900A1/A2/A3 Ninja 900	84-86	645-4041	———
KZ1000A1/A2/A2A	77-78	645-4022	644-4022
KZ1000A3/A3A/A4 MKII	79-80	645-4022	644-4022
KZ1000B1/B2 LTD/B3/B4 LTD	77-80	645-4022	644-4022
KZ1000C1/C1A/C2/C3/C4 Police	78-81	645-4022	644-4022
KZ1000D1 Z1R	1978	645-4022	644-4022
KZ1000D3 Z1R	1980	645-4022	644-4022
KZ1000E1/E2 Shaft ST	79-80	645-4022	644-4022
KZ1000G1 LTD Classic	1980	645-4022	644-4022
KZ1000J1/J2/J3	81-83	645-4016	644-4023
KZ1000K1/K2 LTD	81-82	645-4016	644-4023
KZ1000M1/M2 CSR	81-82	645-4016	644-4023
KZ1000P1-P21 Police	82-02	645-4016	644-4023
KZ1000P24 Police	2005	645-4016	644-4023
KZ1000R1/R2 Replica	82-83	645-4016	644-4023
ZG1000A1-A6F Concours	86-06	645-4041	———
ZL1000A1 Eliminator	1987	645-4041	———
ZX1000A1/A2 Ninja 1000R	86-87	645-4041	———
ZX1000B1/B2/B3 Ninja ZX-10	88-90	645-4041	———
KZ1100A1/A2/A3 Shaft	81-83	645-4016	644-4024
KZ1100B1/B2 GPz	81-82	645-4016	644-4024
KZ1100D1/D2 Spectre	82-83	645-4016	644-4024
KZ1100L1 LTD Shaft	1983	645-4016	644-4024
ZN1100B1/B2 LTD Shaft	84-85	645-4016	644-4016
ZR1100C3/C4 ZRX1100	99-00	645-4041	644-4047
ZX1100A1/A2 GPz	83-84	645-4016	644-4016
ZX1100C1-C4 Ninja ZX-11	90-93	645-4041	644-4047
ZX1100D1-D9 Ninja ZX-11	93-01	645-4041	644-4047
ZX1100E1/E2/E3 GPz	95-97	645-4041	644-4047
ZX1100F1 GPz (ABS)	1996	645-4041	644-4047

Kawasaki ATV

Model	Year	Base Gskt	Head Gskt
KLF220A1-A15 Bayou 220	88-02	645-4046	644-4051
KSF250A1-A17 Mojave 250	87-03	645-4030	644-4029
KSF250A18 KFX250 Mojave	2004	645-4030	644-4029
KEF300A1-A6 Lakota 300	95-00	645-4048	644-4053
KEF300B1/B2/B3 Lakota Sport	01-03	645-4048	644-4053
KLF300A1/A2 Bayou	86-87	645-4048	———
KLF300B1-B17 Bayou 300	88-04	645-4048	644-4053
KLF300C1-C17 Bayou 300 4x4	89-05	645-4048	644-4053
KVF300A1-A4 Prairie 300 4x4	99-02	645-4048	644-4053
KVF300B1/B2/B3/B4 Prairie 300	99-02	645-4048	644-4053
KLF400B1-B7 Bayou 400 4x4	93-99	645-4049	———

Kawasaki Offroad

KX60A1/A2	83-84	645-4001	———
KX60B1-B15	85-99	645-4001	644-4001
KX60B16/B17/B18/B19	00-03	———	644-4001
KDX80B3	1983	645-4001	———
KDX80C1/C2/C3/C4 /C5	84-88	645-4001	———
KX80R1-R7	91-97	645-4044	644-4039
KX80T1/T2/T3/T4	91-94	645-4044	644-4039
KX80W1/W2/W3	98-00	———	644-4039
KX100B5/B6/B7	95-97	645-4044	644-4039
KX100D1-D5	01-05	———	HG-4049
KX100 D6F-D8F	06-08	———	HG-4049
KX100 D9F-DCF	09-12	———	HG-4049
KX125C1/D2/E1	84-86	645-4004	———
KX125F1/G1	88-89	645-4036	———
KX125H1/H2	90-91	645-4037	644-4041
KX125K2/K3/K4	95-97	645-4045	644-4050
KX125L1/L2/L3/L4	99-02	———	644-4050
KL250D2-D22 KLR250	85-05	645-4030	644-4029
KX250D2	1986	645-4023	644-4045
KX250F1/G1	88-89	645-4039	644-4045
KX250H1/H2	90-91	645-4040	644-4045
KX250K2/K3/K4/K5	95-98	645-4047	644-4052
KX250L1/L2/L3/L4	99-02	645-4047	644-4052
KX250M1	2003	645-4047	644-4052
KX500A1/A2/B1	83-85	645-4011	———
KX500E1-E14	89-02	645-4050	644-4055

Suzuki Street

GSF600ST-SK5 Bandit	96-03	———	———
GSX600FJ-FY Katana	88-00	———	———
GSX600FK1-FK6 Katana	01-06	———	———
GSX750FK-FK6 Katana	89-06	———	———
GS-XR750G/H	86-87	———	644-3033
GS-XR750J/K	88-89	———	644-3033
GS-XR750L	1990	———	———
GS1000C/EC/N	78-79	645-3004	644-3003
GS1000EN/ET	80-81	645-3004	644-3003
GS1000GT/GX	80-81	645-3004	644-3003
GS1000GLT/GLX	80-81	645-3004	644-3003
GS1000LN	1979	645-3004	644-3003
GS1000SN/ST	79-80	645-3004	644-3003
GS1100ED/ESD	1983	645-3005	644-3004
GS1100SD Katana	1983	645-3005	644-3004
GS1100GKZ/GKD/	82-83	———	644-3005
GS1100GZ/GLZ/GD/GLD	82-83	———	644-3005
GSX1100FJ-FN Katana	88-92	———	———
GSX1100GM/GN/GP Shaft	91-93	———	———
GSX-R1100G/H/J	86-88	———	———
GSX-R1100K/L/M/N	89-92	645-3044	———
GSX-R1100WP-/WW	93-98	———	———

Suzuki ATV

Model	Year	Base Gskt	Head Gskt
LT-F230G/H	86-87	645-3010	———
LT230EH/EJ/EK/EL	87-90	645-3010	———
LT230EM/EN/EP	91-93	645-3010	———
LT230GEF/GEG	85-86	645-3010	———
LT230SF/SG/SH/SJ	85-88	645-3010	———
LT-4WDH/J/K/L Quadrunner	87-90	645-3010	———
LT-4WDM/N P/R Quadrunner	91-94	645-3010	———
LT-4WDS Quadrunner	1995	645-3010	———
LT-4WDT/V/W Quadrunner	96-98	645-3010	———
LT-F250J/K/L/M/N/P	88-93	645-3010	———
LT-F250R/S/T/V/W/X/Y/K1	94-01	645-3010	———
LT-F250 K2-L2 Ozark	02-12	645-3010	———
LT-F250FX/FY/FK1/FK2 Quad	99-02	645-3010	———
LT250RH/RJ/RK Quad Racer	87-89	645-3049	644-3055
LT250RL/RM/RN Quad Racer	90-92	645-3049	644-3055
LT-Z250 K4-K9 Quadsport	04-09	645-3010	———
LT500RJ/RK/RL Quad Racer	88-90	645-3055	644-3064

Suzuki Dual Sport & Offroad

RM60K3	2003	———	644-4001
RM125K/L/M	89-91	645-3046	———
RM125N/P/R/S/T	92-96	645-3046	———
RM125V/W/X/Y	97-00	645-3046	———
RM125K1/K2/K3	01-03	645-3046	———
DR200SE T-K3 Dual Sport	96-03	645-3010	———
DR250L/M/N/P Offroad	90-93	645-3053	———
DR250SL/SM/SN	90-92	645-3053	———
DR250SEP/SER/SES Dual Sport	93-95	645-3053	———
RM250E/F	84-85	645-3015	644-3013
DR350L-X Offroad	90-99	645-3053	———
DR350SL/SM/SN/SP Dual Sport	90-93	645-3053	———
DR350SER-SEX Dual Sport	94-99	645-3053	———

Yamaha Street

QT50		645-2001	———
DT125		645-2046	———
RD125LC (non USA model)	82-84	645-2048	———
TW200 Trailway	88-96	645-2026	644-2024
TW200 Trailway	97-12	645-2027	644-2024
RD350LC (non USA model)	1985	645-2005	644-2005
RZ350L/N/NC/NCII	83-84	645-2005	644-2005
RD400C/D/E/F	76-79	645-2004	644-2004
SR500E/F/G/H	78-81	645-2035	644-2035
XT500C/D/E/F/G/H	76-82	645-2035	644-2035
FZR600W/WC/A/AC	89-90	645-2051	———
FZR600RA/RAC-RL/RLC	90-99	645-2051	———
–XS650B/C/D/E/F/2F	76-79	645-2036	644-2036
XS650G/H Special	80-81	645-2036	644-2036
XS650SE/SF/SG/SH Special	78-81	645-2036	644-2036
XS650SJ/SK Heritage Special	82-83	645-2036	644-2036
FZ700T/TC	1987	645-2041	———
FZ750N/S/SC	85-86	645-2041	———
FZ750U/UC	1988	645-2041	———
FZR750RT/RU	87-88	645-2041	———
YZF750RF/RFC	1994	645-2061	644-2066
YZF750RH/RHC/RJ/RJC/RK/RKC	96-98	645-2061	644-2066
FZR1000U/UC	1988	645-2049	———
FZR1000	92-95	645-2052	———
GTS1000	93-94	645-2052	———
FJ1100L/LC/N/NC	84-55	645-2038	———
XS1100J Maxim	1982	———	———
XS1100E/F/G/H	78-81	———	644-2026
XS1100LG/LH Midnight Special	80-81	———	644-2026
XS1100SF/SG/SH Special	79-81	———	644-2026
FJ1200 S/SC, T/TC	86-87	———	644-2063
FJ1200W/WC-D/DC	89-92	———	644-2063
FJ1200A D/DC, E/EC	92-93	———	644-2063

Yamaha ATV

Model	Year	Base Gskt	Head Gskt
YFM200N Moto-4	1985	645-2026	644-2024
YFM200DXS/DXT Moto-4	86-87	645-2026	644-2024
YFM200DXU/DXW Moto-4	88-89	645-2026	644-2024
YFS200U-T/SEV Blaster	88-06	645-2048	644-2064
YTM200K/L/N Tri-Moto	83-84	645-2026	644-2024
YTM200N Tri-Moto	1985	645-2026	644-2024
YTM200EK/EL/ERN Tri-Moto	83-85	645-2026	644-2024
YTM225DRN/DRS Tri-Moto	85-86	645-2027	644-2025
YTM225DXK/DXL/DXN Tri-Moto	83-85	645-2027	644-2025
YFB250D/E/F/G/H/J Timberwolf	92-97	645-2027	———
YFB250FWF-FWM/MC 4WD	94-00	645-2027	———
YFB250UH/UJ/UK Timberwolf	96-98	645-2027	———
YFM250M/MC Bear Tracker	2000	645-2027	———
YFM250XL/XLC/XM/XMC Beartracker	99-00	645-2027	———
YFM250XN/XHN/XP/XR/XS Beartracker	01-04	645-2027	———
YFM350S Raptor	2004	645-2057	644-2046
YFM350RSET/RESV Raptor 350	05-06	645-2057	644-2046
YFM350R T-Y Raptor	05-09	645-2057	644-2046
YFM350ERD-ERG Moto-4	92-95	645-2057	644-2046
YFM350FAS Bruin 350 Auto 4x4	2004	645-2057	644-2046
YFM350FAHS Bruin 350 Auto 4x4 Hardwood Camo	2004	645-2057	644-2046
YFM350FHL/FHLC Wolverine	1999	645-2057	644-2046
YFM350FWD-FWJ Big Bear	92-97	645-2057	644-2046
YFM350FWBJ-FWL/LC Big Bear	97-99	645-2057	644-2046
YFM350FXP/FXR Wolverine	02-03	645-2057	644-2046
YFZ350T/U/W/A/B Banshee	87-91	645-2058	644-2048
Yfz350D-V Banshee Limited	92-06	———	644-2048
YFZ350LER/LES Banshee Limited	03-04	———	644-2048
YFZ350RB Banshee Limited	2003	———	644-2048
YFZ350SET/SEV Banshee SE	05-06	———	644-2048
YFZ350SPV Banshee SP	2006	———	244-2048
YFM400S Big Bear 400 2WD	2004	645-2057	644-2046
YFM400P Big Bear 400 2WD	2002	645-2057	644-2046
YFM400FM/FMC Big Bear 4WD	2000	645-2057	644-2046
YFM400FP Big Bear 4WD Real Tree X-tra	2002	645-2057	644-2046
YFM400FHM Big Bear Buckmaster	2000	645-2057	644-2046
YFM400FHP Big Bear 400 4WD	2002	645-2057	644-2046
YFM400FWE-FWL/LC Kodiak	93-99	645-2057	644-2046
YFM400FWR Big Bear	2003	645-2057	644-2046
YFM400FWNM/MC/N Big Bear	00-01	645-2057	644-2046
YFM400FWNHM/MC/N Big Bear Buckmaster 4WD	00-01	645-2057	644-2046
YFM400HP Big Bear 2WD Real Tree X-tra	2002	645-2057	644-2046
YFM400NM/NMC/N Big Bear	00-01	645-2057	644-2046
YFM400NR Big Bear 2WD	2003	645-2057	644-2046
YFM400NHN Big Bear 2WD	2001	645-2057	644-2046
YFM400FS-FV Big Bear 400 4WD	04-06	645-2057	644-2046

Yamaha Dual Sport & Offroad

PW50A-V Y-Zinger	90-12	645-2001	644-2001
PW80 G-V Y-Zinger	95-10	645-2063	———
YZ80N/S/T/U/W/A/B/D	85-92	———	644-2008
YZ125K/L/N	83-85	645-2010	644-2012
YZ125F1/G1/H1/J1	94-97	645-2066	———
BW200N/S Big Wheel	85-86	645-2026	644-2024
BW200ES/ET/EU Big Wheel	86-88	645-2026	644-2024
TW200T/TC-H/HC Trailway	87-96	645-2026	644-2024
TW200J/JC-M/MC Trailway	97-12	645-2026	644-2024
XT200J/K/KC Dual Sport	82-83	645-2026	644-2024
WR250ZH/ZJ	96-97	645-2068	———
IT490K/L	83-84	645-2012	———
YZ490J/K/L/N/S/T/U/W/A	82-90	645-2012	———
TT500C/D/E/F/G/H	76-81	645-2035	———
XT500C/D/E/F/G/H Dual Sport	76-81	645-2035	———
TT600K/L/N	83-85	645-2014	———
XT600L/LC-W/WC	84-89	645-2014	———

Exhaust Pipe Gaskets

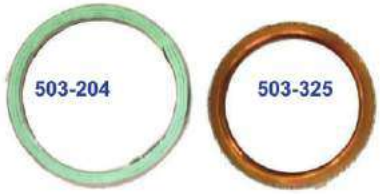

Vesrah Exhaust Pipe Gaskets

Quality Vesrah exhaust pipe gaskets exceed OEM specifications. Sold each. ***Made in Japan.***

Honda Street

Model	Year	Vesrah Ref.	Order No.
XL75	77-79	VE-1002	503-102
XL80S	80-85	VE-1002	503-102
CT90 Trail 90	66-68	VE-1002	503-102
CT90K1-K6 Trail 90	69-75	VE-1002	503-102
CT90 Trail 90	76-79	VE-1002	503-102
CB100K0/K1/K2 Super Sport 100	70-72	VE-1003	503-103
CL100K0/K1/K2 Scrambler 100	70-72	VE-1003	503-103
CL100S/S2/S3 Scrambler 100S	71-73	VE-1003	503-103
SL100K0/K1/K2/K3 Motosport 100	70-73	VE-1003	503-103
XL100/K1	74-75	VE-1003	503-103
XL100	76-78	VE-1003	503-103
XL100S	79-85	VE-1002	503-102
CB125S/S1/S2	73-75	VE-1003	503-103
CB125S	76-82	VE-1003	503-103
CB125TT	1990	VE-1003	503-103
CL125S/S1	73-74	VE-1003	503-103
NX125	88-90	VE-1003	503-103
SL125/K1/K2 Motor Sport	71-73	VE-1003	503-103
XL125/K1	74-75	VE-1003	503-103
CM185T Twinstar	1979	VE-1003	503-103
XL185S	79-83	VE-1003	503-103
CM200T Twinstar	80-82	VE-1003	503-103
TLR200 Reflex	86-87	VE-1003	503-103
XL200R	83-84	VE-1003	503-103
CB250 Nighthawk	91-05	VE-1003	503-103
CH250 Elite 250	85-87	VE-1003	503-102
CM250C Custom	82-83	VE-1003	503-103
CMX250C Rebel	85-87	VE-1003	503-103
CMX250C Rebel	96-97	VE-1003	503-103
CMX250C Rebel	99-07	VE-1003	503-103
CMX250C2 Rebel	99-00	VE-1003	503-103
CMX250CD Rebel L	1986	VE-1003	503-103
NX250	88-90	VE-1005	503-105
VTR250 Interceptor	88-90	VE-1008	503-108
XL250/K1/K2 Motor Sport	73-75	VE-1006	503-106
XL250 Motor Sport	1976	VE-1006	503-106
XL250R	82-83	VE-1003	503-103
XL250R	84-87	VE-1031	503-131
XR250L	91-96	VE-1031	503-131
CB350F Super Sport	73-74	VE-1002	503-102
CB350G	1973	VE-1006	503-106
CB350K2-K4 Super Sport	70-72	VE-1006	503-106
CL350K2-K5 Scrambler	70-73	VE-1006	503-106
SL350/K1/K2 Motor Sport	70-72	VE-1006	503-106
XL350/K1	74-75	VE-1012	503-112
XL350	76-78	VE-1012	503-112
XL350R	84-85	VE-1003	503-103
CB360G	1974	VE-1006	503-106
CB360K	1974	VE-1006	503-106
CB360T	75-76	VE-1006	503-106
CJ360T	76-77	VE-1006	503-106

Honda Street

Model	Year	Vesrah Ref.	Order No.
CL360/K1	74-75	VE-1006	503-106
CB400A Automatic	1978	VE-1006	503-108
CB400F Super Sport	75-77	VE-1002	503-102
CB400F CB1	89-90	VE-1008	503-108
CB400T Hawk	80-81	VE-1008	503-108
CB400T1 Hawk	78-79	VE-1008	503-108
CB400TII Hawk	78-79	VE-1008	503-108
CM400A Automatic	79-81	VE-1008	503-108
CM400C Custom	1981	VE-1008	503-108
CM400E	80-81	VE-1008	503-108
CM400T	79-81	VE-1008	503-108
CB450K	69-74	VE-1012	503-112
CB450SC Nighthawk	82-83	VE-1008	503-108
CB450SC Nighthawk	1985	VE-1008	503-108
CB450T Hawk	1982	VE-1008	503-108
CM450A Automatic	82-83	VE-1008	503-108
CM450C Custom	1982	VE-1008	503-108
CM450E	82-83	VE-1008	503-108
CMX450C Rebel	86-87	VE-1008	503-108
CB500T 2-cylinder	75-76	VE-1012	503-112
CB500/K1/K2 (4-cylinder)	71-73	VE-1003	503-103
CX500	78-79	VE-1006	503-106
CX500C Custom	79-82	VE-1006	503-106
CX500D Deluxe	79-81	VE-1006	503-106
FT500 Ascot	82-83	VE-1005	503-105
GB500	89-90	VE-1003	503-103
GL500 Silverwing	81-82	VE-1006	503-106
GL500I Silverwing Interstate	81-82	VE-1006	503-106
VF500C Magna	84-85	VE-1003	503-103
VF500F Interceptor	84-86	VE-1006	503-103
VT500C Shadow	83-86	VE-1008	503-108
VT500FT Ascot	83-84	VE-1006	503-108
XL500S Dual Sport	79-81	VE-1003	503-103
CB550F Super Sport	75-77	VE-1003	503-103
CB550/K1	74-76	VE-1003	503-103
CB550K	77-78	VE-1003	503-103
CB550SC Nighthawk	1983	VE-1008	503-108
CB600F 599	2004	VE-1008	503-108
CB600F 599	2006	VE-1008	503-108
CBR600F Hurricane	87-90	VE-1008	503-108
CBR600F2 Hurricane	91-94	VE-1008	503-108
CBR600F3 Hurricane	95-98	VE-1008	503-108
CBR600F4 Hurricane	99-05	VE-1008	503-108
CBR600RR	03-07	VE-1008	503-108
CBR600SE	1998	VE-1008	503-108
CBR600SJR Smokin Joe Replica	1996	VE-1008	503-108
VT600C Shadow	88-89	VE-1005	503-105 (R)
		VE-1008	503-108 (F)
VT600C Shadow VLX	91-06	VE-1005	503-105 (R)
		VE-1008	503-108 (F)
VT600CD Shadow VLX Deluxe	93-06	VE-1005	503-105 (R)
		VE-1008	503-108 (F)
VT600CD2 Shadow VLX	99-00	VE-1005	503-105 (R)
		VE-1008	503-108 (F)
XL600R	83-87	VE-1003	503-103
XL600V Transalp	89-90	VE-1008	503-108

Honda Street

Model	Year	Vesrah Ref.	Order No.
CB650	79-82	VE-1008	503-108
CB650C Custom	80-81	VE-1008	503-108
CB650SC Nighthawk	82-85	VE-1008	503-108
NT650 Hawk GT	88-90	VE-1005	503-105(R)
		VE-1008	503-108(F)
NX650	88-89	VE-1003	503-103
XR650L Dual Sport	93-06	VE-1008	503-103
CB700SC Nighthawk	84-86	VE-1005	503-105
VF700C Magna	84-87	VE-1003	503-103
VF700F Interceptor	84-85	VE-1003	503-103
VF700S Sabre	84-85	VE-1003	503-103
VFR700F/F2 Interceptor	86-87	VE-1003	503-103
VT700C Shadow	84-85	VE-1012	503-112
CB750 Nighthawk	91-03	VE-1005	503-105
CB750A Automatic	76-78	VE-1005	503-105
CB750C Custom	80-82	VE-1005	503-105
CB750F Super Sport	76-78	VE-1005	503-105
CB750F Super Sport	79-82	VE-1005	503-105
CB750K0/K1/K2/K3/K4/K5	69-75	VE-1005	503-105
CB750/K	76-78	VE-1005	503-105
CB750K	79-82	VE-1005	503-105
CB750L LTD	1979	VE-1005	503-105
CB750SC Nighthawk	82-83	VE-1005	503-105
RVF750R (RC45)	1994	VE-1003	503-103
VF750C V45 Magna	82-83	VE-1003	503-103
VF750C V45 Magna	1988	VE-1003	503-103
VF750C Magna	94-03	VE-1003	503-103
VF750C2 Magna Deluxe	97-00	VE-1003	503-103
VF750CD Magna Deluxe	95-98	VE-1003	503-103
VF750F Interceptor	83-84	VE-1003	503-103
VF750S V45 Sabre	82-83	VE-1003	503-103
VFR750F Interceptor	1986	VE-1003	503-103
VFR750F	90-97	VE-1003	503-103
VFR750R (RC30)	1990	VE-1003	503-103
VT750C Shadow	1983	VE-1012	503-112
VT750C Shadow	98-00	VE-1005	503-105
VT750C Shadow Aero	04-06	VE-1005	503-105
VT750CA Shadow Aero	04-06	VE-1005	503-105
VT750CD Shadow Deluxe	98-01	VE-1005	503-105
VT750CD2 Shadow Deluxe	98-01	VE-1005	503-105
VT750CDA Shadow ACE 750 Deluxe	02-03	VE-1005	503-105
VT750CDB Shadow ACE 750 Deluxe	02-03	VE-1005	503-105
VT750CDC Shadow ACE 750 Deluxe	02-03	VE-1005	503-105
VT750CDD Shadow ACE 750 Deluxe	02-03	VE-1005	503-105
VT750DC Shadow Spirit 750	01-02	VE-1005	503-105
VT750DCA Shadow Spirit 750	2003	VE-1005	503-105
VT750DCA Shadow Spirit 750	05-06	VE-1005	503-105
VT750DCB Shadow Spirit 750	2003	VE-1005	503-105
VT750DCB Shadow Spirit 750	05-06	VE-1005	503-105
PC800 Pacific Coast	89-90	VE-1012	503-112
PC800 Pacific Coast	94-98	VE-1012	503-112
VFR800 Interceptor	02-07	VE-1003	503-103
VFR800A Interceptor ABS	02-07	VE-1003	503-103
VFR800FI Interceptor	98-01	VE-1003	503-103
VT800C Shadow	1988	VE-1012	503-112
CB900C Custom	80-82	VE-1005	503-105
CB900F Super Sport	81-82	VE-1005	503-105
CB900F 919	02-07	VE-1008	503-108
CBR900RR	93-99	VE-1008	503 108
CBR929RE	2001	VE-1005	503 105
CBR929RR	00-01	VE-1005	503-105
CBR954RR	02-03	VE-1005	503-105
CB1000	94-95	VE-1005	503-105
CB1000C Custom	1983	VE-1005	503-105

Honda Street

Model	Year	Vesrah Ref.	Order No.
CBR1000F Hurricane	87-88	VE-1005	503-105
CBR1000F Hurricane	90-91	VE-1005	503-105
CBR1000F Hurricane	93-96	VE-1005	503-105
GL1000 Goldwing	75-79	VE-1006	503-106
GL1000L Goldwing LTD	1976	VE-1006	503-106
VF1000F Interceptor	1984	VE-1008	503-108
VF1000R	85-86	VE-1008	503-108
VTR1000F Super Hawk	98-05	VE-1012	503-112
CB1100F Super Sport	1983	VE-1005	503-105
CBR1100XX Blackbird	97-03	VE-1005	503-105
GL1100 Goldwing	80-83	VE-1006	503-106
GL1100A Goldwing Aspencade	82-83	VE-1006	503-106
GL1100I Goldwing Interstate	80-83	VE-1006	503-106
ST1100	91-02	VE-1008	503-108
ST1100A (ABS)	92-02	VE-1008	503-108
VF1100C V65 Magna	83-86	VE-1008	503-108
VF1100S V65 Sabre	84-85	VE-1008	503-108
VT1100C Shadow	85-90	VE-1012	503-112
VT1100C Shadow 1100	92-96	VE-1012	503-112
VT1100C Shadow Spirit	97-06	VE-1012	503-112
VT1100C2 Shadow ACE	95-99	VE-1012	503-112
VT1100C2 Shadow Sabre	00-06	VE-1012	503-112
VT1100C2-2 Shadow ACE	1997	VE-1012	503-112
VT1100C3 Shadow Aero	98-02	VE-1012	503-112
VT1100D2 Shadow ACE	1999	VE-1012	503-112
VT1100T ACE Tourer	98-01	VE-1012	503-112
GL1200 Goldwing	1984	VE-1006	503-106
GL1200A Goldwing Aspencade	84-87	VE-1006	503-106
GL1200I Goldwing Interstate	84-87	VE-1006	503-106
GL1200L Goldwing LTD	1985	VE-1006	503-106
GL1200SE-i Goldwing SEi	1986	VE-1006	503-106
ST1300	03-07	VE-1008	503-108
ST1300A ABS	03-07	VE-1008	503-108
GL1500 Goldwing	88-90	VE-1003	503-103
GL1500A Goldwing Aspencade	91-99	VE-1003	503-103
GL1500C Valkyrie	97-00	VE-1003	503-103
GL1500C Valkyrie	2003	VE-1003	503-103
GL1500CDValkyrie	01-03	VE-1003	503-103
GL1500CF Valkyrie Interstate	99-01	VE-1003	503-103
GL1500CT Valkyrie Tourer	97-00	VE-1003	503-103
GL1500I Goldwing Interstate	91-96	VE-1003	503-103
GL1500SE Goldwing SE	90-00	VE-1003	503-103
GL1800 Goldwing	01-07	VE-1003	503-103
GL1800A Goldwing Aspencade	01-07	VE-1003	503-103
NRX1800DA Valkyrie Rune	2004	VE-1003	503-103
NRX1800DB Valkyrie Rune	2004	VE-1003	503-103
NRX1800EA Valkyrie Rune	2004	VE-1003	503-103
NRX1800EB Valkyrie Rune	2004	VE-1003	503-103
VTX1800C	02-07	VE-1012	503-112
VTX1800C1/C2/C3	2005	VE-1012	503-112
VTX1800F1/F2/F3	05-07	VE-1012	503-112
VTX1800N1/N2/N3	2005	VE-1012	503-112
VTX1800N	06-07	VE-1012	503-112
VTX1800R	02-03	VE-1012	503-112
VTX1800R1/R2/R3	04-05	VE-1012	503-112
VTX1800S	02-03	VE-1012	503-112
VTX1800S1/S2/S3	04-05	VE-1012	503-112
VTX1800T	2007	VE-1012	503-112

Exhaust Pipe Gaskets

Honda ATV

Model	Year	Vesrah Ref.	Order No.
ATC90/K1/K2/K3	70-75	VE-1002	503-102
ATC90	76-78	VE-1002	503-102
ATC110	79-85	VE-1002	503-102
ATC125M	86-87	VE-1003	503-103
TRX125 Fourtrax	87-88	VE-1003	503-103
ATC185	1980	VE-1003	503-103
ATC185S	81-83	VE-1003	503-103
ATC200	81-83	VE-1003	503-103
ATC200E	82-84	VE-1003	503-103
ATC200ES Big Red	82-84	VE-1003	503-103
ATC200M	84-85	VE-1003	503-103
ATC200S	84-86	VE-1003	503-103
ATC200X	83-87	VE-1003	503-103
TRX200 Fourtrax	1984	VE-1003	503-103
TRX200 Fourtrax 200	90-91	VE-1003	503-103
TRX200D Fourtrax Type II	91-97	VE-1003	503-103
TRX200SX Fourtrax	86-88	VE-1003	503-103
ATC250ES Big Red	85-87	VE-1008	503-108
ATC250SX	85-87	VE-1008	503-108
TRX250 Fourtrax	85-87	VE-1008	503-108
TRX250 Recon	97-01	VE-1008	503-108
TRX250EX Sportrax 250EX	01-08	VE-1003	503-103
TRX250TE Fourtrax Recon ES	02-06	VE-1003	503-103
TRX250TM Fourtrax Recon	02-06	VE-1003	503-103
TRX250X Fourtrax 250X	87-88	VE-1008	503-108
TRX250X Fourtrax 250X	91-92	VE-1008	503-108
TRX300 Fourtrax 300	88-00	VE-1008	503-108
TRX300EX Fourtrax 300 EX	93-00	VE-1008	503-108
TRX300EX Sportrax 300 EX	01-08	VE-1008	503-108
TRX300FW Fourtrax 4x4	1988	VE-1008	503-108
TRX300FW Fourtrax 4x4	90-00	VE-1008	503-108
ATC350X	85-86	VE-1003	503-103
TRX350 Fourtrax 4x4	86-87	VE-1003	503-103
TRX350D Fourtrax Foreman 4x4	87-89	VE-1003	503-103
TRX350FE Rancher 4x4 ES	00-06	VE-1008	503-108
TRX350FM Rancher 4x4	00-06	VE-1008	503-108
TRX350TE Rancher ES	00-06	VE-1008	503-108
TRX350TM Fourtrax Rancher	00-06	VE-1008	503-108
TRX400EX Fourtrax 400 EX	99-00	VE-1008	503-103
TRX400EX Sportrax 400 EX	01-05	VE-1003	503-103
TRX400FA Fourtrax Rancher AT	04-07	VE-1008	503-108
TRX400FGA Fourtrax Rancher AT	04-07	VE-1008	503-108
TRX400FM Fourtrax Foreman	2002	VE-1008	503-108
TRX400FW Fourtrax Foreman	95-01	VE-1008	503-108
TRX400FW Fourtrax Foreman	2003	VE-1008	503-108
TRX450ES Fourtrax Foreman ES	98-01	VE-1008	503-108
TRX450FE Fourtrax Foreman ES	02-04	VE-1008	503-108
TRX450FM Fourtrax Foreman S	02-04	VE-1008	503-108
TRX450S Fourtrax Foreman S	98-01	VE-1008	503-108
TRX500FA Fourman Rubicon	01-07	VE-1008	503-108
TRX500FE Fourtrax Foreman 4x4 ES	05-07	VE-1008	503-108
TRX500FGA Fourman Rubicon	04-05	VE-1008	503-108
TRX500FGA Fourman Rubicon GP	06-07	VE-1008	503-108
TRX500FM Fourtrax Foreman 4x4	05-06	VE-1008	503-108
TRX500TM Fourtrax Foreman	05-06	VE-1008	503-108
TRX650FA Rincon	03-05	VE-1005	503-105
TRX650FA Fourtrax Rincon	04-07	VE-1005	503-105
TRX650FGA Fourtrax Rincon Gpscape	04-05	VE-1005	503-105

Honda Dual Sport & Offroad

Model	Year	Vesrah Ref.	Order No.
XL75	77-79	VE-1002	503-102
XR75	77-78	VE-1002	503-102
CRF80F	04-08	VE-1031	503-131
XL80S	80-85	VE-1002	503-102
XR80	79-84	VE-1002	503-102
XR80R	85-88	VE-1002	503-102
XR80R	90-91	VE-1002	503-102
XR80R	93-03	VE-1002	503-131
CT90 Trail 90	66-68	VE-1002	503-102
CT90K1-K6 Trail 90	69-75	VE-1002	503-102
CT90 Trail 90	76-79	VE-1002	503-102
CRF100F	03-08	VE-1031	503-131
SL100/K1/K2/K3 Motosport 100	70-73	VE-1003	503-103
XL100/K1	74-75	VE-1003	503-103
XL100	76-78	VE-1003	503-103
XL100S	79-85	VE-1002	503-102
XR100	81-84	VE-1002	503-102
XR100R	85-91	VE-1002	503-102
XR100R	92-03	VE-1031	503-131
CT125 Trail 125	1977	VE-1003	503-103
SL125/K1/K2 Motor Sport	71-73	VE-1003	503-103
TL125K1/K2 Trials	74-75	VE-1003	503-103
TL125S Trials	1976	VE-1003	503-103
XL125/K1	74-75	VE-1003	503-103
XL125	76-78	VE-1003	503-103
XL125S	79-82	VE-1003	503-103
XL125S	84-85	VE-1003	503-103
CRF150F	03-08	VE-1003	503-103
XL175/K1/K2	73-75	VE-1006	503-106
XL175	76-78	VE-1006	503-106
XL185S	79-83	VE-1003	503-103
XR185	1979	VE-1003	503-103
TLR200 Reflex	86-87	VE-1003	503-103
TR200 Fat Cat	86-87	VE-1003	503-103
XL200R	83-84	VE-1003	503-103
XR200 (dual shock)	80-84	VE-1003	503-103
XR200R Pro-Link	81-83	VE-1003	503-103
XR200R	84-85	VE-1031	503-131
XR200R	86-88	VE-1003	503-103
XR200R	90-91	VE-1003	503-103
XR200R	93-02	VE-1003	503-103
CRF230F	03-08	VE-1003	503-103
CRF250R	04-07	VE-1005	503-105
CRF250X	04-07	VE-1005	503-105
NX250	88-90	VE-1005	503-105
TL250 Trials	1976	VE-1003	503-103
XL250/K1/K2 Motor Sport	73-75	VE-1006	503-106
XL250 Motor Sport	1976	VE-1006	503-106
XL250R	82-83	VE-1003	503-103
XL250R	84-87	VE-1031	503-131
XR250L	91-96	VE-1031	503-131
XR250R	81-82	VE-1031	503-131
XR250R	84-04	VE-1031	503-131
SL350/K1/K2 Motor Sport	70-72	VE-1006	503-106
XL350/K1	74-75	VE-1012	503-112
XL350	76-78	VE-1012	503-112
XL350R	84-85	VE-1003	503-103
XR350R	83-84	VE-1003	503-103
XR400R	96-04	VE-1003	503-103
XL500S	79-81	VE-1003	503-103
XR500	79-80	VE-1003	503-103
XR500R	81-84	VE-1003	503-103
XL600R	83-87	VE-1003	503-103
XL600V Transalp	89-90	VE-1008	503-108
XR600R	85-00	VE-1003	503-103
XR650L Dual Sport	93-08	VE-1003	503-103
XR650R	00-07	VE-1003	503-103

Kawasaki Street

Model	Year	Vesrah Ref.	Order No.
BN125A4/A5 Eliminator 125	01-02	VE-4002	503-402
BN125A7/A8 Eliminator 125	04-05	VE-4002	503-402
BN125A6F Eliminator 125	2006	VE-4002	503-402
KZ200A1/A2	78-79	VE-4002	503-402
EL250B2/B3 Eliminator	88-89	VE-4002	503-402
EL250E/AE2/E3/E4 250HS Eliminator	91-94	VE-4002	503-402
EX250E1/E2 Ninja 250R	86-87	VE-4002	503-402
EX250F2/F3/F4 Ninja 250R	88-90	VE-4002	503-402
EX250F6-F19 Ninja 250R	92-05	VE-4002	503-402
EX250F6F Ninja 250R	2006	VE-4002	503-402
KZ250D1/D2 LTD & CSR	80-81	VE-4002	503-402
KZ250L1 CSR	1982	VE-4002	503-402
KZ250W1 LTD Belt	1983	VE-4002	503-402
EX305B1 GPz Belt	1983	VE-4002	503-402
KZ305A1/A2 CSR	81-82	VE-4002	503-402
KZ305B1 CSR Belt	1982	VE-4002	503-402
KZ305B2/B3 LTD Belt	87-88	VE-4002	503-402
KZ400A1/A2	77-78	VE-4006	503-406
KZ400B1/B2	77-78	VE-4006	503-406
KZ400C1	1978	VE-4006	503-406
KZ400/D/D3/D4	74-77	VE-4006	503-406
KZ400H1 LTD	1979	VE-4006	503-406
KZ400S/S2/S3 Special	75-77	VE-4006	503-406
S3/S3A-400/KH400A	74-77	VE-4003	503-403
KZ440A1/A2/A3/A4 LTD	80-83	VE-4006	503-406
KZ440B1/B2	80-81	VE-4006	503-406
KZ440D1-D5 LTD Belt	80-83	VE-4006	503-406
EN450A1-A6 LTD 454	85-90	VE-4004	503-404
EN500A1-A7 Vulcan 500	90-96	VE-4004	503-404
EN500C1-C10 Vulcan 500 LTD	96-05	VE-4004	503-404
EN500C6F/C7F Vulcan 500 LTD	06 -07	VE-4004	503-404
EX500A1-A7	87-93	VE-4004	503-404
EX500D1/D2/D3 Ninja 500	94-96	VE-4004	503-404
EX500D4-D12 Ninja 500R	97-05	VE-4004	503-404
EX500D6F/D7F/D8F Ninja 500R	06-08	VE-4004	503-404
H1/A/B/C Mach III (2 stroke)Triple	69-72	VE-4003	503-403
H1D/E/F-500 (2 stroke) Triple	73-75	VE-4003	503-403
KH500A8 (2 stroke) Triple	1976	VE-4003	503-403
KZ550A1/A2/A3/A4	80-83	VE-4002	503-402
KZ550C1/C2/C3/C4 LTD	80-83	VE-4002	503-402
KZ550D1 GPz	1981	VE-4002	503-402
KZ550F1 Spectre	1983	VE-4002	503-402
KZ550F2 LTD	1984	VE-4002	503-402
KZ550H1/H2 GPz	82-83	VE-4002	503-402
KZ550M1 LTD Shaft	1983	VE-4002	503-402
ZR550B1/B2	91-92	VE-4002	503-402
ZX550A1/A2 GPz	84-85	VE-4002	503-402
KL600A1 KLR600	1984	VE-4013	503-413
KL600B1/B2 KLR600	85-86	VE-4013	503-413
ZL600A1/A2 Eliminator	86-87	VE-4002	503-402
ZL600B2/B3 Eliminator 600	96-97	VE-4002	503-402
ZX600A1/A2/A3 Ninja 600R	85-87	VE-4002	503-402
ZX600B1 Ninja 600RX	1987	VE-4002	503-402
ZX600C1-C10 Ninja 600R	88-97	VE-4002	503-402
ZX600D1-D4 Ninja ZX-6	90-93	VE-4014	———
ZX600E1-E10 Ninja ZX-6	93-02	VE-4014	———
ZX600E11/E12 ZZR600	03-04	VE-4014	———
ZX600F1/F2/F3 Ninja ZX-6R	95-97	VE-4014	———
ZX600G1/G2 Ninja ZX-6R	98-99	VE-4014	———
ZX600J1/J2/J3 Ninja ZX-6R	00-02	VE-4014	———
ZX600J4 ZZR600	2005	VE-4014	———
ZX600J6F ZZR600	2006	VE-4014	———
ZX600K1 Ninja ZX-6RR	2003	VE-4014	———
ZX600M1 Ninja ZX-6RR	2004	VE-4014	———
ZX600N1 Ninja ZX-6RR	2005	VE-4014	———
ZX600N6F Ninja ZX-6RR	2006	VE-4014	———

Kawasaki Street

Model	Year	Vesrah Ref.	Order No.
ZX636B1/B2 Ninja ZX-6R	03-04	VE-4001	———
ZX636C1/C6F ZX-6R	05-06	VE-4001	———
EJ650A2/A3 W650	00-01	VE-4004	503-404
EX650A6F Ninja 650R	2006	VE-4014	———
KL650A1-A19 KLR650	87-05	VE-4013	503-413
KL650A6F KLR650	2006	VE-4013	503-413
KL650B2/B3 Tengai KLR650	90-91	VE-4013	503-413
KZ650B1/B2/B2A/B3	77-79	VE-4002	503-402
KZ650C1/C2/C3 Custom	77-79	VE-4002	503-402
KZ650D1/D1A/D2 SR	78-79	VE-4002	503-402
KZ650E1 LTD	1980	VE-4002	503-402
KZ650F1	1980	VE-4002	503-402
KZ650H1/H2/H3 CSR	81-83	VE-4002	503-402
KZ700A1	1984	VE-4002	503-402
ZN700A1/A2 LTD Shaft	1984	VE-4002	503-402
H2/H2A/H2B/H2C-750 triple	72-75	VE-4003	503-403
KZ750B1/B2/B3/B4 (2 cyl.)	76-79	VE-4002	503-402
KZ750E1/E2/E3	80-82	VE-4002	503-402
KZ750F1 LTD Shaft	1983	VE-4002	503-402
KZ750G1 LTD (2 cyl.)	1980	VE-4004	503-404
KZ750H1/H2/H3/H4 LTD	80-83	VE-4002	503-402
KZ750K1/K2 LTD Belt (2 cyl.)	83-84	VE-4004	503-404
KZ750L3	1983	VE-4002	503-402
KZ750M1 CSR (2 cyl.)	1982	VE-4004	503-404
KZ750N1/N2 Spectre	82-83	VE-4002	503-402
KZ750R1 GPz	1982	VE-4002	503-402
ZR750C1/C2/C3 Zephyr	91-93	VE-4002	503-402
ZR750F2 ZR-7	2000	VE-4002	503-402
ZR750H1/H2/H3 ZR-7S	01-03	VE-4002	503-402
ZX750A1/A2/A3 GPz	83-85	VE-4002	503-402
ZX750E1/E2 GPz Turbo	84-85	VE-4002	503-402
ZX750F1/F2/F3/F4 Ninja 750R	87-90	VE-4005	503-405
ZX750H1/H2 Ninja ZX-7	89-90	VE-4005	503-405
ZX750J1/J2 Ninja ZX-7	91-92	VE-4016	———
ZX750K1/K2 Ninja ZX-7R	91-92	VE-4016	———
ZX750L1/L2/L3 Ninja ZX-7	93-95	VE-4016	———
ZX750M1/M2 Ninja ZX-7R	93-94	VE-4016	———
ZX750N1/N2 Ninja ZX-7RR	96-97	VE-4016	———
ZX750P1-P8 Ninja ZX-7R	96-03	VE-4016	———
Z1/Z1A/Z1B-900	73-75	VE-4005	503-405
KZ900A4/A5	76-77	VE-4005	503-405
KZ900B1 LTD	1976	VE-4005	503-405
ZL900A1/A2 Eliminator	85-86	VE-4004	503-404
ZX900A1/A2/A3 Ninja 900R	84-86	VE-4004	503-404
ZX900B1/B2/B3/B4 Ninja ZX-9R	94-97	VE-4014	———
ZX900C1/C2 Ninja ZX-9R	98-99	VE-4014	———
ZX900E1/E2 Ninja ZX-9R	00-01	VE-4004	503-404
ZX900F1/F2 Ninja ZX-9R	02-03	VE-4004	503-404
KZ1000A1/A2	77-78	VE-4005	503-405
KZ1000A3/A3A/A4 MKII	79-80	VE-4005	503-405
KZ1000B1/B2/B3/B4 LTD	77-80	VE-4005	503-405
KZ1000C1-C4 Police	78-81	VE-4005	503-405
KZ1000D1 Z1R	1978	VE-4005	503-405
KZ1000D3 Z1R	1980	VE-4005	503-405
KZ1000E1/E2 Shaft ST	79-80	VE-4005	503-405
KZ1000G1 LTD Classic	1980	VE-4005	503-405
KZ1000J1/J2/J3	81-83	VE-4005	503-405
KZ1000K1/K2 LTD	81-82	VE-4005	503-405
KZ1000M1/M2 CSR	81-82	VE-4005	503-405
KZ1000P1-P21 Police	82-02	VE-4005	503-405
KZ1000P24 Police	2005	VE-4005	503-405
KZ1000R1/R2 Replica	82-83	VE-4005	503-405

Exhaust Pipe Gaskets

Kawasaki Street

Model	Year	Vesrah Ref.	Order No.
ZG1000A1-A20 Concours	86-05	VE-4004	503-404
ZG1000A6F Concours	2006	VE-4004	503-404
ZL1000A1 Eliminator	1987	VE-4004	503-404
ZR1000A1/A2/A3 Z1000	03-05	VE-4004	503-404
ZX1000A1/A2 Ninja 1000R	86-87	VE-4004	503-404
ZX1000B1/B2/B3 Ninja ZX-10	88-90	VE-4004	503-404
ZX1000C1/C2 Ninja ZX-10R	04-05	VE-4016	———
KZ1100A1/A2/A3 Shaft	81-83	VE-4005	503-405
KZ1100B1/B2 GPz	81-82	VE-4005	503-405
KZ1100D1/D2 Spectre	82-83	VE-4005	503-405
KZ1100L1 LTD Shaft	1983	VE-4005	503-405
ZN1100B1/B2 LTD Shaft	84-85	VE-4005	503-405
ZR1100C3/C4 ZRX1100	99-00	VE-4004	503-404
ZX1100A1/A2 GPz	83-84	VE-4005	503-405
ZX1100C1-C4 Ninja ZX-11	90-93	VE-4004	503-404
ZX1100D1-D9 Ninja ZX-11	93-01	VE-4004	503-404
ZX1100E1/E2/E3 GPz	95-97	VE-4004	503-404
ZX1100F1 GPZ (ABS)	1996	VE-4004	503-404
ZG1200A/B Voyager XII	86-03	VE-4005	503-405
ZR1200A1-A5 ZRX1200	01-05	VE-4004	503-404
ZX1200A1/A2 Ninja ZX-12R	00-01	VE-4004	503-404
ZX1200B1-B4 Ninja ZX-12R	02-05	VE-4004	503-404
ZX1200C1-C4 ZZR1200	02-05	VE-4004	503-404
KZ1300A1/A2/A3/A4	79-82	VE-4002	503-402
KZ1300B2 Tourer	1980	VE-4002	503-402
ZN1300A1-A6 Voyager	83-88	VE-4002	503-402

Kawasaki ATV

KSF80A1/A2/A3/A6F KFX80	03-06	VE-3026	503-326
KLT160A1	1985	VE-4002	503-402
KLF185A1-A4 Bayou	85-88	VE-4002	503-402
KLT185A1/A2 Bayou	86-87	VE-4002	503-402
KLT200A1-A4	81-83	VE-4002	503-402
KLT200B1	1983	VE-4002	503-402
KLT200C1/C2	83-84	VE-4002	503-402
KLF220A1-A15 Bayou 220	85-02	VE-4002	503-402
KLF250A1/A2/A3 Bayou 250	03-05	VE-4002	503-402
KLF250A6F Bayou 250	2006	VE-4002	503-402
KLT250A1/A2	82-83	VE-4002	503-402
KLT250C1/C2/C3 Prairie	83-85	VE-4002	503-402
KLT250P1 Police	1984	VE-4002	503-402
KSF250A1-A17 Mojave	87-03	VE-4012	503-412
KSF250A18 KFX250 Mojave	2004	VE-4012	503-412
KXF250A1/A2 Tecate 4	87-88	VE-4008	503-408
KXT250A1/A2 Tecate 3	84-85	VE-4008	503-408
KXT250B1/B2 Tecate 3	86-87	VE-4008	503-408
KEF300A1-A6 Lakota 300	95-00	VE-4002	503-402
KEF300B1/B2/B3 Lakota Sport	01-03	VE-4002	503-402
KLF300A1/A2 Bayou 300	86-87	VE-4002	503-402
KLF300B1-B17 Bayou 300	88-04	VE-4002	503-402
KLF300C1-C16 Bayou 4x4	89-04	VE-4002	503-402
KVF300A1-A4 Prairie 300 4x4	99-02	VE-4002	503-402
KVF300B1/B2/B3/B4 Prairie 300	99-02	VE-4002	503-402
KVF360A1/A2/A3 /A6F Prairie 360 4x4	03-06	VE-4011	———
KVF360B1/B2/B3/B6F Prairie 360	03-06	VE-4011	———
KVF360C1 360 4x4 Advantage Classic	2003	VE-4011	———
KVF360C2/C3 360 4x4 Hardwoods	04-05	VE-4011	———
KLF400B1-B7 Bayou 400 4x4	93-99	VE-4002	503-402
KVF400A1/A2 Prairie 4x4	97-98	VE-4002	503-402
KVF400B1 Prairie 400	1998	VE-4002	503-402
KVF400C1-C4 Prairie 400 4x4	99-02	VE-4002	503-402
KVF400D1/D2/D3/D4 Prairie 400	99-02	VE-4002	503-402
KVF650A1/A2 Prairie 650	02-03	VE-4010	———
KVF650B1/B2 Prairie 650	02-03	VE-4010	———
KVF650D1 Brute Force	2005	VE-4010	———

Kawasaki Dual Sport & Offroad

Model	Year	Vesrah Ref.	Order No.
MT1/C	71-75	VE-4002	503-402
KV75A5-A9	76-80	VE-4002	503-402
KD80A1/A2	75-76	VE-4002	503-402
KD80M1-M8	80-87	VE-4002	503-402
KD100M1/M2/M3/M4	76-79	VE-4002	503-402
KM100A1-A7	76-81	VE-4002	503-402
KD125A2-A5	76-79	VE-4003	503-403
KE125A3-A10	76-83	VE-4003	503-403
KLX125A1/A2/A3/A6F	03-06	VE-3022	503-322
KLX125B1/B2/B3/B6F KLX125F	03-06	VE-3022	503-322
KX125G1/H1/H2	89-91	VE-4004	503-404
KE175D2/D3/D4/D5	80-83	VE-4003	503-403
KDX200E1-E6	89-94	VE-4022	———
KDX200H1-H11/H6F	95-06	VE-4022	———
KDX220A4-A12	97-05	VE-4022	———
KDX250B2/B3/B4	82-84	VE-4008	503-408
KDX250D1/D2/D3/D4	91-94	VE-4008	503-408
KL250A1-A4	78-81	VE-4002	503-402
KL250C1/C2	82-83	VE-4002	503-402
KL250D2-D22 KLR250	85-05	VE-4012	503-412
KLX250A1/A2	79-80	VE-4002	503-402
KX250B1	1982	VE-4008	503-408
KX250D1/D2	85-86	VE-4008	503-408
KX250F1/G1/H1/H2	88-91	VE-4008	503-408
KX250J1/J2/K1	92-94	VE-4008	503-408
KX250N1/N2/T6F KX250F	04-06	VE-4016	———
KLX300A2-A10 KLX300R	97-05	VE-4001	———
KLX300A6F KLX300R	2006	VE-4001	———
KX500B2	1986	VE-4004	503-404
KX500C1	1987	VE-4004	503-404
KX500D1	1988	VE-4008	503-408
KX500E1-E16	89-04	VE-4008	503-408
KL600A1 KLR600	1984	VE-4013	503-413
KL600B1/B2 KLR600	85-86	VE-4013	503-413
KL650A1-A19 KLR650	87-05	VE-4013	503-413
KL650A6F KLR650	2006	VE-4013	503-413
KL650B2/B3 Tengai KLR650	90-91	VE-4013	503-413

Suzuki Street

GN125Z/D	82-83	VE-3002	503-302
GN125EM	1991	VE-3002	503-302
GN125EN/EP/ER/ES/ET/EV	92-97	VE-3022	503-322
DR250SL/SM/SN Dual Sport	90-92	VE-3022	503-322
DR250SEP/SER/SES Dual Sport	93-95	VE-3023	503-323
GN250Z/D	82-83	VE-3001	503-301
GN250F	1985	VE-3001	503-301
GN250J	1988	VE-3001	503-301
GS300LZ /LD	1982	VE-3002	503-302
GS300LF	1985	VE-3002	503-302
DR350SL/SM/SN/SP Dual Sport	90-93	VE-3022	503-322
DR350SER/S/T/V/W/X Dual Sport	94-99	VE-3023	503-323
GN400T/XT/XX/TX/TZ	80-82	VE-3003	503-303
GN400T/XT/XX/TX/TZ	80-82	VE-3003	503-303
GS400B/XB/C/XC	77-78	VE-3003	503-303
GSF400M/N/P Bandit	91-93	VE-3026	503-326
GS425N/EN/LN	1979	VE-3003	503-303
GS450ET/EX/EZ/ED	80-83	VE-3003	503-303
GS450GAZ/GAD Automatic	82-83	VE-3003	503-303
GS450GAF Automatic	1985	VE-3003	503-303
GS450LT/LX/LZ/LD	80-83	VE-3003	503-303
GS450LF/LG/LH/LJ	85-88	VE-3003	503-303
GS450ST/SX	80-81	VE-3003	503-303

Suzuki Street

Model	Year	Vesrah Ref.	Order No.
GS450TX/TZ/TXZ/TXD	81-83	VE-3003	503-303
GS500EK/L/M/N/P/R/S/T	89-96	VE-3003	503-303
GS500EV/EW/EX/EY/K1/K2	97-02	VE-3003	503-303
GS500FK3/FK4/FK5	03-05	VE-3003	503-303
GS550B/C/EC/N/EN/ET	77-80	VE-3001	503-301
GS550ED/ESD/ES3 (16 valve)	82-83	VE-3002	503-302
GS550ESE/EF/ESF/ESG (16 valve)	84-86	VE-3002	503-302
GS550LN/LT/LX/LZ	79-82	VE-3001	503-301
GS550LD (16 valve)	1983	VE-3002	503-302
GS550LF/LG (16 valve)	85-86	VE-3002	503-302
GS550MZ	1982	VE-3001	503-301
GS550TX	1982	VE-3002	503-301
GSF600ST/SV/SW/SX Bandit	96-99	VE-3022	503-322
GSF600SY/SK1/SK2/SK3 Bandit	00-03	VE-3022	503-322
GSX600FJ/FK/FL/FM Katana	88-91	VE-3022	503-322
GSX600FN-FK5 Katana	92-05	VE-3022	503-322
GSX-R600WN/WP	92-93	VE-3024	503-324
GSX-R600V/W/X/Y	97-00	VE-3005	503-305
GSX-R600K1/K2/K3/K4/K5	01-05	VE-3005	503-305
		VE-3033	———
RF600RR/RS/RT	94-96	VE-3024	503-324
DR650SL/SM/SN/SP Dual Sport	90-93	VE-3003	503-303
DR650SER/SES Dual Sport	94-95	VE-3003	503-303
DR650SET/SEV/SEW/SEX/SEY	96-00	VE-3031	———
DR650SEK1/SEK2/SEK3 Dual Sport	01-03	VE-3031	———
DR650SEK4/SEK5 Dual Sport	04-05	VE-3031	———
GR650D/XD Tempter	1983	VE-3003	503-303
GS650EX/EZ	81-82	VE-3002	503-302
GS650GX/GZ/GD	81-83	VE-3002	503-302
GS650GLX/GLZ/GLD	81-83	VE-3002	503-302
GS650MD Katana	1983	VE-3002	503-302
LS650FG/FH Savage	86-87	VE-3019	503-319
LS650PG/PH/PJ Savage	86-88	VE-3019	503-319
LS650PS-PY Savage	95-00	VE-3019	503-319
LS650PK1-PK4 Savage	01-04	VE-3019	503-319
SV650X/Y/K1/K2/K3/K4/K5	99-05	VE-3031	———
SV650SX/SY	99-00	VE-3031	———
SV650SK1/SK2/SK3/SK4/SK5	01-05	VE-3031	———
XN85D Turbo	1983	VE-3002	503-302
GS700EF/ESF	1985	VE-3002	503-302
GS750B/C/EC/N/EN	77-79	VE-3003	503-303
GS750ET/EX/EZ	80-82	VE-3003	503-303
GS750ED/ESD	1983	VE-3002	503-302
GS750LN	1979	VE-3003	503-303
GS750LT/LX	80-81	VE-3003	503-303
GS750TZ/TD	82-83	VE-3003	503-303
GS750SD Katana	1983	VE-3003	503-303
GSX750FK-FYKatana	89-00	VE-3022	503-322
GSX750FK1-FK5 Katana	01-05	VE-3022	503-322
GSX-R750G/H	86-87	VE-3022	503-322
GSX-R750RG	1986	VE-3022	503-322
GSX-R750J/K/L /M/N	88-92	VE-3022	503-322
GSX-R750WP/WR/WS	93-95	VE-3024	503-324
GSX-R750T/V/W/X/Y	96-00	VE-3025	503-325
GSX-R750K1/K2/K3/K4/K5	01-05	VE-3025	503-325
		VE-3033	———
GS850GN/GT/GX/GZ/GD	79-83	VE-3003	503-303
GS850GLT/GLX/GLZ/GLD	80-83	VE-3003	503-303
RF900RR/RS/RT/RV	94-97	VE-3024	503-324
RF900RZS	1995	VE-3024	503-324
DL1000K2/K3/K4/K5 V-Storm	02-05	VE-3036	———

Suzuki Street

Model	Year	Vesrah Ref.	Order No.
GS1000C/EC/N/EN/ET	78-80	VE-3003	503-303
GS1000GT/GLT/GX/GLX	80-81	VE-3003	503-303
GS1000LN	1979	VE-3003	503-303
GS1000SN/ST	79-80	VE-3003	503-303
GS1000SZ Katana	1982	VE-3003	503-303
GSX-R1000K1/K2/K3 /K4/K5	01-05	VE-3025	503-325
TL1000RW/RX/RY/RK1/RK2/RK3	98-03	VE-3036	———
TL1000SV/SW/SX/SY/SK1	97-01	VE-3036	———
GS1100ET/EX/EZ	80-82	VE-3003	503-303
GS1100ED/ESD	1983	VE-3003	503-303
GS1100GZ/GLZ/GD/GLD	82-83	VE-3003	503-303
GS1100GKZ/GK2/GKD/GKE	82-84	VE-3003	503-303
GS1100LT	1980	VE-3003	503-303
GS1100SD Katana	1983	VE-3003	503-303
GSX1100FJ/K/L/M/N/P Katana	88-93	VE-3022	503-322
GSX1100GM Shaft	1991	VE-3023	503-323
GSX1100GN/GP Shaft	92-93	VE-3022	503-322
GSX-R1100G/H/J	86-88	VE-3022	503-322
GSX-R1100K/L/M/N	89-92	VE-3023	503-323
GSX-R1100WP/R/S/T/V/W	93-98	VE-3025	503-325
GS1150ES3/ESE/EF/ESF/ESF	83-85	VE-3003	503-303
GS1150EF2/EG/ESG	85-86	VE-3003	503-303
GSF1200SAV Bandit	1997	VE-3022	503-322
GSF1200SV/SW/SX/SY Bandit	97-00	VE-3022	503-322
GSF1200SK1/SK2/SK3 Bandit	01-03	VE-3022	503-322
GSF1200SK4/SK5 Bandit	04-05	VE-3022	503-322
GSX1300RX/RY Hayabusa	99-00	VE-3031	———
GSX1300RK1-RK5 Hayabusa	01-05	VE-3031	———
GV1400GCG/GCH Cavalacade LX	86-87	VE-3004	503-304
GV1400GDG/GDH Cavalacade LX	86-87	VE-3004	503-304
GV1400GDJ/GDK Cavalacade LX	88-89	VE-3004	503-304
GV1400GTG/GTH Cavalacade	86-87	VE-3004	503-304
VS1400GLPL/M/N/P/R Intruder	90-94	VE-3019	503-319
VS1400GLPS/T/V/W Intruder	95-98	VE-3019	503-319
VS1400GLPX/Y/K1/K2/K3/K4	99-04	VE-3019	503-319
VS1400K5 S83Boulevard	2005	VE-3002	503-319

Suzuki ATV

LT80S/T/V/W/Y/K1-K4 Quadrunner 80	95-04	VE-3026	503-326
ALT125D/E/F/G Quadrunner	83-86	VE-3002	503-302
LT125D/E/F/G/H Quadrunner	83-87	VE-3002	503-302
ALT185F Quadrunner	1985	VE-3002	503-302
LT185E/F/G/H Quadrunner	84-87	VE-3002	503-302
LT230EH/EJ/EK/EL Quadrunner	87-90	VE-3004	503-304
LT230EM/EN/EP Quadrunner	91-93	VE-3004	503-304
LT230GEF/GEG Quadrunner	85-86	VE-3004	503-304
LT230SF/SG/SH/SJ Quadsport	85-88	VE-3004	503-304
LT-F230G/H	86-87	VE-3004	503-304
LT250SK/SL Quadsport	89-90	VE-3004	503-304
LT-Z250K4/K5 Quadsport	04-05	VE-3028	503-328
LT-4WDH/WDJ/WDK 4x4	87-89	———	———
LT-4WDL/M/N/P/R/S/T 4x4	90-96	———	———
LT-300EH/EJ/EK Quadrunner	87-89	———	———
LT-F300FX/FY King Quad	99-00	VE-3028	503-328
LT-F300FK1/FK2 King Quad	01-02	VE-3028	503-328
LT-F4WDXM/N/P/R King Quad	91-94	———	———
LT-F4WDXS/T/V/W King Quad	95-98	———	———
LT-F4WDV/WDW	97-98	———	———
LT-A400FK2/FK3 Eiger Auto 4WD	02-03	———	———
LT-A400FK4/FK5 Eiger Auto 4WD	04-05	———	———
LT-A400FCK3 Eiger Auto 4WD	2003	———	———
LT-A400FCK4 Eiger Auto 4WD	2004	———	———
LT-A400K2/K3/K4 Eiger Auto 2WD	02-04	VE-3022	503-322

Exhaust Pipe Gaskets

Suzuki ATV

Model	Year	Vesrah Ref.	Order No.
LT-A500FK2/FK3 Vinson 4WD	02-03	VE-3022	503-322
LT-A500FK4/FCK4 Vinson 4WD	2004	VE-3022	503-322
LT-A500FK5 Vinson 4WD	2005	VE-3022	503-322
LT-F500FK3-FK5 Vinson Manual 4WD	03-05	VE-3022	503-322
LT-F500FW-FK5 Quadrunner	98-05	VE-3022	503-322

Suzuki Dual Sport & Offroad

RM50C/N/T/X	78-81	VE-3002	503-302
DS80C/N/T/X/Z/D	78-83	VE-3002	503-302
DS80F/G/H/J/K/L/M	85-91	VE-3002	503-302
DS80N/P/R/S/T/V/W/X/Y	92-00	VE-3022	503-322
DS80K1/K2/K3/K4	01-04	VE-3022	503-322
JR80Y/K1/K2/K3/K4	01-04	VE-3022	503-322
DR100D/E/F/G/H/J/K/L	84-90	VE-3022	503-302
SP100D Dual Sport	1983	VE-3022	503-302
DR125Z/D/E	82-84	VE-3022	503-302
DR125G/H/J	86-88	VE-3022	503-302
DR125SER/SES/SET	94-96	VE-3022	503-322
DR-Z125K3/K4/K5	03-05	VE-3022	503-322
DR-Z125LK3/LK4/LK5	03-05	VE-3022	503-322
SP125G/H/J	86-88	VE-3002	503-302
DR200G/H/J	86-88	VE-3004	503-304
DR200SET/V/W/X/Y	96-00	VE-3028	503-328
DR200SK1/SK2/SK3/SK4 Dual Sport	01-04	VE-3028	503-328
DR200SK5 Dual Sport	2005	VE-3028	503-328
SP200G/H/J Dual Sport	86-88	VE-3004	503-304
DR250Z/D	82-83	VE-3001	503-301
DR250F	1985	VE-3001	503-301
DR250L/M/N/P Offroad	90-93	VE-3022	503-322
DR250SL/SM/SN Dual Sport	90-92	VE-3022	503-322
DR250SEP/SER/SES Dual Sport	93-95	VE-3023	503-323
DR-Z250K1/K2/K3/K4/K5	01-05	VE-3022	503-322
RM250N/P/R/S/T/V **(washer)**	92-97	VE-3030	503-330
RM250X/Y/K1/K2/K3/K4/K5 **(washer)**	99-05	VE-3030	503-330
RMX250P/R/S/T/V/W (washer)	93-98	VE-3030	503-330
RM-Z250K4/K5	04-05	VE-4016	———
SP250Z/D Dual Sport	82-83	VE-3001	503-301
SP250F Dual Sport	1985	VE-3001	503-301
DR350SL/SM/SN/SP Dual Sport	90-93	VE-3022	503-322
DR350SER/S/T/V/W/X Dual Sport	94-99	VE-3023	503-323
DR650SL/SM/SN/SP/SER/SES Dual	90-95	VE-3003	503-303
DR650SET/SEV/SEW/SEX/SEY	96-00	VE-3031	———
DR650SEK1-SEK5 Dual Sport	01-05	VE-3031	———

Yamaha Street

YSR50T/U/W/A/B/D	87-92	VE-2001	503-201
RS100B/C	75-76	VE-2001	503-201
SR185H/J Exciter	81-82	VE-2004	503-204
SR250G/H/J Exciter	80-82	VE-2004	503-204
SR250TH Exciter II	1981	VE-2004	503-204
SRX250T/TC	1987	VE-2012	503-212
XV250U/UC/W/WC Route 66	88-89	VE-2024	503-224
XV250A/AC Route 66	1990	VE-2024	503-224
XV250G/GC-L/LC Route 66	95-99	VE-2024	503-224
XV250P/PC/R/RC Virago 250	02-03	VE-2024	503-224
XV250S/SC/T/TC/V/VC Virago 250	04-06	VE-2024	503-224
FZR400U/SUC-A/SAC	88-90	VE-2026	503-226
XS400J/K Maxim	82-83	VE-2004	503-204
XS400RJ/RK Seca	82-83	VE-2004	503-204
SR500E/F/G/H	78-81	VE-2005	503-205
XT500C/D/E/F/G/H	76-81	VE-2005	503-205
XV500K Virago	1983	VE-2004	503-204
XJ550H/J/K Maxim	81-83	VE-2012	503-212
XJ550RH/RJ/RK Seca	81-83	VE-2012	503-212

Yamaha Street

Model	Year	Vesrah Ref.	Order No.
XV535A/AC Virago	1990	VE-2004	503-204
XV535E/EC-L/LC Virago	93-99	VE-2004	503-204
XV535SF/SFC-SJ/SJC Virago	94-97	VE-2004	503-204
FJ600L/LC/N/NC	84-85	VE-2012	503-212
FZ600S/SC/T/TC/U/UC	86-88	VE-2012	503-212
FZ600SS/SSC/ST/STC FZ6	04-05	VE-2026	503-226
FZR600W/WC/AC	89-90	VE-2018	503-218
FZR600RA/RAC-RL/RLC	90-99	VE-2026	503-226
SRX600S/SC	1986	VE-2018	503-218
XJ600SD/SDC-SK/SKC Seca II	92-98`	VE-2027	503-227
YX600S/SC-A/AC Radian	86-90	VE-2012	503-212
YZF600RG/RGC-RV/RVC	95-06	VE-2026	503-226
YZF-R6L/LC/M/MC/N/NC	99-01	VE-2026	503-226
YZF-R6P/PC/R/RC/S/SC/T/TC	02-05	VE-2026	503-226
YZF-R6SN/SNC Champions LTD ED	2001	VE-2026	503-226
XJ650G/H/J/K Maxim	80-83	VE-2012	503-212
XJ650LH Midnight Maxim	1981	VE-2012	503-212
XJ650LJ/LK Seca Turbo	82-83	VE-2012	503-212
XJ650RJ Seca	1982	VE-2012	503-212
XS1/XS1B/XS2-650	70-72	VE-2005	503-205
TX650/A	73-74	VE-2005	503-205
XS650B/C/D/E/F/2F	75-79	VE-2005	503-205
XS650G/H Special II	80-81	VE-2005	503-205
XS650SE/SF/SG/SH Special	78-81	VE-2005	503-205
XVS650AN/ANC-AT/ATC V-Star Classic	01-05	VE-2004	503-204
XVS650ATR/ATRC V-Star Silverado	2003	VE-2004	503-204
XVS650ATS V-Star Silverado	2004	VE-2004	503-204
XVS650ATT/ATTC V-Star Silverado	2005	VE-2004	503-204
XVS650K/KC-T/TC V-Star Custom	98-05	VE-2004	503-204
FZ700T/TC	1987	VE-2012	503-212
XJ700N/NC/S/SC Maxim	85-86	VE-2012	503-212
XJ700XN/XNC/XS/XSC Maxim X	85-86	VE-2012	503-212
FZ750N/S/SC	85-86	VE-2012	503-212
FZ750U/UC	1988	VE-2012	503-212
FZR750RT/RU	87-88	VE-2012	503-212
XJ750J/K Maxim	82-83	VE-2012	503-212
XJ750MK Midnight Maxim	1983	VE-2012	503-212
XJ750RH/RJ/RK Seca	81-83	VE-2012	503-212
XS750D/2D/E/F	77-79	VE-2004	503-204
XS750SE/SF Special	78-79	VE-2004	503-204
XV750H/J/K Virago	81-83	VE-2011	503-211
XV750MK Midnight Virago	1983	VE-2011	503-211
XV750U/UC-G/GC Virago	88-95	VE-2028	503-228
XV750H1/HC1/J1/JC1 Virago	96-97	VE-2028	503-228
YZF750RF/RFC	1994	VE-2029	503-229
YZF750RH/RHC/RJ/RJC/RK/RKC	96-98	VE-2029	503-229
XS850G/H	80-81	VE-2004	503-204
XS850LG/LH Midnight Special	80-81	VE-2004	503-204
XS850SG/SH Special	80-81	VE-2004	503-204
XJ900RK Seca	1983	VE-2012	503-212
XV920J/K Virago	82-83	VE-2011	503-211
XV920MK Midnight Virago	1983	VE-2011	503-211
XV920RH/RJ	81-82	VE-2011	503-211
FZ1000N/NC/P/PC/R/RC (FZ1)	01-03	VE-2029	503-229
FZ1000S/SC/T/TC (FZ1)	04-05	VE-2029	503-229
FZR1000T/TC-G/GC	87-95	VE-2026	503-226
GTS1000AE/AEC/AF/AFC	93-94	VE-2026	503-226
XV1000L/LC/N/NC Virago	84-85	VE-2028	503-228
YZF1000RJ/RJC	1997	VE-2026	503-226
YZF1000RK/RKC	1998	VE-2029	503-229
YZF-R1L/LC/M/MC (YZF-R1)	99-00	VE-2029	503-229
YZF-R1N/NC/P/PC (YZF-R1)	01-02	VE-2029	503-229
YZF-R1SN/SNC Champions Limited	2001	VE-2029	503-229
YZF-R1R/RC/S/SC (YZF-R1)	03-04	VE-2029	503-229
YZF-R1T/TC (YZF-R1)	2005	VE-2029	503-229

Yamaha Street

Model	Year	Vesrah Ref.	Order No.
FJ1100L/LC/N/NC	84-85	VE-2004	503-204
XJ1100J Maxim	1982	VE-2004	503-204
XS1100E/F/G/H	78-81	VE-2004	503-204
XS1100LG/LH Midnight Special	80-81	VE-2004	503-204
XS1100SF/SG/SH Special	79-81	VE-2004	503-204
XV1100S/SC-F/FC Virago	86-94	VE-2011	503-211
XV1100G/GC-L/LC Virago	95-99	VE-2028	503-228
XV1100SH/SHC/SJ/SJC/SK/SKC	96-98	VE-2028	503-228
XVS1100L/LC/M/MC V-Star	99-00	VE-2028	503-228
XVS1100AM/AMC-AS/ASC V-Star Classic	00-04	VE-2028	503-228
XVS1100AT V-Star 1100 Silverado	03-05	VE-2028	503-228
XVS1100AWR/AWRC V-Star 1100 Classic	2003	VE-2028	503-228
XVS1100AWT/AWTC V-Star 1100 Classic		VE-2028	503-228
XVS1100L/LC-S/SC V-Star 1100 Custom	99-04	VE-2028	503-228
FJ1200S/SC/T/TC	86-87	VE-2004	503-204
FJ1200W/WC/A/AC/B/BC/D/DC	89-92	VE-2004	503-204
FJ1200AD/ADC/AE/AEC (ABS)	92-93	VE-2004	503-204
VMX12N/NC/S/SC V-Max	85-86	VE-2005	503-205
VMX12U/UC-V/VC V-Max	88-06	VE-2005	503-205
XVZ12TDK Venture Royale	1983	VE-2005	503-205
XVZ12TK/L/KC2 Venture	83-84	VE-2005	503-205
XVZ12DL/DN Venture Royale	84-85	VE-2005	503-205
XVZ12DKC2 Venture Royale	1984	VE-2005	503-205
FJR1300R/RC/S/SC/T/TC	03-05	VE-2029	503-229
XVZ13T/TC/U/UC Venture	87-88	VE-2005	503-205
XVZ13DS-DEC Venture Royale	86-93	VE-2005	503-205
XVZ13AH/AHC-AM/AMC Royal Star	96-00	———	———
XVZ13ATH/ATHC-ATM/ATMC Royal Star Tour Classic	96-00	———	———
XVZ13LTJ/LTJC-LTM/LTMC Royal Star Tour Deluxe	97-00	———	———
XVZ13TFL/TFLC- TFM/TFMC Royal Star Venture	99-00	———	———
XVZ13TFSM/TFSMC Venture MM Limited Edition	2000	———	———
XV1600AL/ALC Road Star	1999	———	———
XV1600AM/AMC Road Star	2000	———	———
XV1600ALM/ALMC Road Star MM Limited	2000	———	———
XV1600ATL/ATLC Road Star Silverado	1999	———	———
XV1600ATM/ATMC Road Star Silverado	2000	———	———
XV17PCP/PCPC Road Star Warrior	2002	VE-2028	503-228

Yamaha ATV

Model	Year	Vesrah Ref.	Order No.
YFM50S/RT/RV Raptor 50	04-06	VE-2024	503-224
YFM80N/S/T/U Moto-4	85-88	VE-2024	503-224
YFM80D-N Badger	92-01	VE-2024	503-224
YFM80GT Grizzly 80	2005	VE-2024	503-224
YFM80WP/WR/WS Raptor	02-04	VE-2024	503-224
YFM80RT/RV Raptor 80	05-06	VE-2024	503-224
YFA1W Breeze Moto-4	1989	VE-2024	503-224
YFA1B/D/E/F/G/H/J/K Breeze Moto-4	91-98	VE-2024	503-224
YFA1L/M/MC/N/NC Breeze Moto-4	99-01	VE-2024	503-224
YFA1P/PC/R/RC/S/SC Breeze	02-04	VE-2024	503-224
YFM125S/GT Grizzly 125	04-05	VE-2024	503-224
YFM125GHT Grizzly 125 Hunter	2005	VE-2024	503-224
YT125G/H/J/K/L/N Tri-Moto	80-85	VE-2002	503-202
YT175J/K Tri-Moto	82-83	VE-2002	503-202
YFM200DXS/DXT/DXU/DXW Moto-4	86-89	VE-2004	503-204

Yamaha ATV

Model	Year	Vesrah Ref.	Order No.
YFM200N Moto-4	1985	VE-2004	503-204
YFS200U-T Blaster	88-05	VE-2002	503-202
YTM200K/L/N Tri-Moto	83-84	VE-2004	503-204
YTM200N Tri-Moto	1985	VE-2004	503-204
YTM200EK/EL/ERN Tri-Moto	83-85	VE-2004	503-204
YFM225S/T/U Moto-4	86-88	VE-2004	503-204
YTM225DRN/DRS Tri-Moto	85-86	VE-2004	503-204
YTM225DXK/DXL/DXN Tri-Moto	83-85	VE-2004	503-204
YFB250D/E/F/G/H/J Timberwolf	92-97	VE-2004	503-204
YFB250FWF-FWM/MC Timberwolf 4WD	94-00	VE-2004	503-204
YFB250UH/UJ/UK Timberwolf	96-98	VE-2004	503-204
YFM250W/A/B Moto-4	89-91	VE-2004	503-204
YFM250BT Bruin 250	2005	VE-2004	503-204
YFM250XL/XLC/XM/XMC Beartracker	99-00	VE-2004	503-204
YFM250XN/XP/XR/XS Beartracker 2WD	01-04	VE-2004	503-204
YFM250XHN Beartracker Real Tree	2001	VE-2004	503-204
YFM350AS Bruin 350 Auto 2WD	2004	VE-2025	503-225
YFM350BAT Bruin 2WD	2005	VE-2025	503-225
YFM350ERT/ERU/ERW/ERA Moto-4	87-90	VE-2025	503-225
YFM350ERD/ERE/ERF/ERG Moto-4	92-95	VE-2025	503-225
YFM350FAHS Bruin 350 Auto 4x4	2004	VE-2025	503-225
YFM350FAHT Bruin 4WD Hunter	2005	VE-2025	503-225
YFM350FAS/FAT Bruin 350 Auto 4x4	04-05	VE-2025	503-225
YFM350FHL/FHLC Big Bear 4WD	1999	VE-2025	503-225
YFM350FWT-FWJ Big Bear	87-97	VE-2025	503-225
YFM350FWBJ/FWBK Big Bear	97-98	VE-2025	503-225
YFM350FWBL/FWBLC Big Bear	1999	VE-2025	503-225
YFM350FXG-FXK Wolverine	95-98	VE-2025	503-225
YFM350FXL-FXMC Wolverine	99-00	VE-2025	503-225
YFM350S/RT Raptor 350	04-05	VE-2025	503-225
YFM350RSET Raptor 350SE	2005	VE-2025	503-225
YFM350UH/UJ/UK/UL/ULC Big Bear	96-99	VE-2005	503-225
YFM350XT-Warrior	87-93	VE-2005	503-205
YFM350XF/XFN-XS/XSC Warrior	94-04	VE-2025	503-225
YFP350U Terrapro	1988	VE-2005	503-205
YFZ350T-V Banshee	87-06	VE-2023	503-223
YFZ350LER/LES Banshee Limited Edit.	03-04	VE-2023	503-223
YFZ350RB Banshee Limited Edition	2003	VE-2023	503-223
YFZ350SET Banshee SE	2005	VE-2023	503-223
YFM400FWE-FWK Kodiak	93-98	———	———
YFM600FWAK/FWAKC Grizzly	1998	VE-2026	503-226
YFM600FWAL/FWALC Grizzly	1999	VE-2026	503-226
YFM600FWAM/FWAMC Grizzly	2000	VE-2026	503-226
YFM600FWHM/FWHMC Grizzly Realtree	2000	VE-2026	503-226
YFM600FHN Grizzly Realtree Hunter	2001	VE-2026	503-226
YFM600FN Grizzly	2001	VE-2026	503-226
YFM660FHP Grizzly Hunter	2002	VE-2026	503-226
YFM660FP/FPS Grizzly 660	2002	VE-2026	503-226
YFM660RN/RNC/RP/RPB Raptor 660R	01-02	VE-2026	503-226
YFM660RR/RRC/RS/RT Raptor 660R	03-05	VE-2026	503-226
YFM660RLER/RLES Raptor 660R Limit.	03-04	VE-2026	503-226
YFM660RSET Raptor SE	2005	VE-2026	503-226

Note: 503-223 is a muffler gasket, not an exhaust pipe gasket.

Yamaha Dual Sport & Offroad

YZ50G	1980	VE-2001	503-201
YZ60H/J/K	1980	VE-2001	503-201
DT80H/J/K	81-83	VE-2001	503-201
YZ80E/F/G/H/J	78-82	VE-2002	503-202
TT-R90	99-05	VE-2024	503-224
TT-R125LWM	2000	VE-2027	503-227
TT-R125RM/RMC	2000	VE-2027	503-227
YZ125D/E	77-78	———	———
BW200N/S	85-86	VE-2004	503-204
BW200ES/ET/EU	85-88	VE-2004	503-204

Exhaust Pipe Gaskets

Yamaha Dual Sport & Offroad

Model	Year	Vesrah Ref.	Order No.
TW200T/TC-T1/T1C Trailway	87-05	VE-2004	503-204
XT200J/K/KC Dual Sport	82-83	VE-2004	503-204
TT225S/T	86-87	VE-2004	503-204
TT-R225L/LC-S/SC	99-04	VE-2004	503-204
XT225D/DC-V/VC Serow	92-06	VE-2004	503-204
TT-R230T/TC/V/VC	05-06	VE-2004	503-204
IT250F/G/H/J/K	79-83	VE-2014	503-214
TT250G/H/J	80-82	VE-2004	503-204
TT-R250M/MC/N/NC/P/PC	00-02	VE-2029	503-229
TT-R250R/RC/S/SC/T/TC/V/VC	03-06	VE-2029	503-229
WR250ZB/ZD/ZE/ZF/ZG/ZH/ZJ	91-97	VE-2014	503-214
WR250FN/FP/FR/FS/FT/FV	01-06	VE-2031	———
XT250G/H/J/K/KC Dual Sport	80-83	VE-2004	503-204
XT250L/LC Dual Sport	1984	VE-2012	503-212
YZ250WRW/WRA	89-90	VE-2014	503-214
YZ250FN/FP/FR/FS/FT 4-stroke	01-05	VE-2031	———
YZ250G/H/J	80-82	VE-2014	503-214
YZ250T/U/W/A/B/D/E1/F1	87-94	VE-2014	503-214
TT350S/T Offroad	86-87	VE-2012	503-212
XT350N/NC-B/BC Dual Sport	85-91	VE-2012	503-212
XT350D/DC-M/MC Dual Sport	92-00	VE-2027	503-227
WR400FK/FL/FM	98-00	VE-2032	———
YZ400FK/FL	98-99	VE-2032	———
WR426FN/FP	01-02	VE-2032	———
YZ426FM/FN/FP	00-02	VE-2032	———
WR450FR/FS/FT/FV	03-06	VE-2032	———
YZ450FR/FS/FT	03-05	VE-2032	———
IT465H/J	81-82	VE-2014	503-214
YZ465G/H/J	80-82	VE-2014	503-214
IT490K/L	83-84	VE-2014	503-214
YZ490J/K	82-83	VE-2014	503-214
TT500C/D/E/F/G/H Dual Sport	76-81	VE-2005	503-205
XT500C/D/E/F/G/H Dual Sport	78-81	VE-2005	503-205
XT550J/K Dual Sport	82-83	VE-2018	503-218
TT600K/L/N/S Offroad	83-86	VE-2018	503-218
XT600L/LC-W/C Dual Sport	84-89	VE-2018	503-218
XT600EA/EAC-EE/EEC Dual Sport	90-93	VE-2018	503-218
XT600EF/EFC/EG/EGC Dual Sport	94-95	VE-2026	503-226

Coolant Recovery System

Prevents loss of coolant due to overheating, works on most off-road water-cooled motorcycles, snowmobiles and ATVs, designed for hot weather and/or high-altitude riding conditions, mounts to frame or behind number plate, includes 8 oz. bottle, hoses, clamps, mounting strap and instructions.

Order No. 950-778

Photo courtesy of 4TheRiders

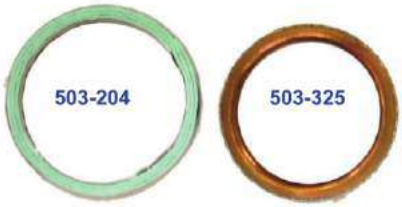

Sudco Part Number to OEM Cross Reference
Exhaust Pipe Gaskets

Honda

OEM Reference	Dimensions I.D. x O.D. x Thickness	Vesrah Reference	Order No.
18291-KK0-003	30.00 x 37.80 x 4.0mm	VE-1031	503-131
18291-KZ1-670	30.00 x 37.80 x 4.0mm	VE-1031	503-131
18291-MN4-920	34.80 x 43.00 x 4.0mm	VE-1008	503-108
18291-MN5-650	31.50 x 39.80 x 4.0mm	VE-1003	503-103
18291-MM5-860	37.00 x 45.10 x 4.0mm	VE-1005	503-105
18291-MM8-880	44.20 x 52.00 x 4.0mm	VE-1012	503-112
18291-MR5-801	44.20 x 52.00 x 4.0mm	VE-1012	503-112
18291-MV9-000	34.80 x 43.00 x 4.0mm	VE-1008	503-108
18291-028-306	32.00 x 38.00 x 3.5mm	VE-1002	503-102
18291-283-000	44.20 x 52.00 x 4.0mm	VE-1012	503-112
18291-286-306		VE-1006	503-106

Kawasaki

18067-004	32.70 x 39.00 x 3.0mm	VE-4002	503-402
18067-008		VE-4003	503-403
18067-018	34.80 x 43.00 x 4.1mm	VE-4005	503-405
18067-020	34.5 x 45.0 x 5.0mm	VE-4006	503-406
11009-1253		VE-4008	503-408
11009-1374		VE-4013	503-413
11009-1380		VE-4007	———
11009-1840		VE-4004	503-404
11009-1866	32.70 x 39.00 x 3.0mm	VE-4002	503-402
11009-1906	34.80 x 43.00 x 4.1mm	VE-4005	503-405
11009-1949		VE-4008	503-408
11060-1108	50.90 x 60.10 x	VE-4013	503-413
11060-1242	34.5 x 45.0 x 5.0mm	VE-4006	503-406
11060-1488		VE-4007	———
11060-1496	39.30 x 45.60 x 2.40mm	VE-4003	503-403
11060-1764	41.50 x 49.40 x 4.1mm	VE-4012	503-412
11061-S058		VE-3026	503-326

Suzuki

14181-37D00		VE-3001	503-301
14172-02B40		VE-3027	503-327
14181-01D00	38.00 x 46.60 x 5.0mm	VE-3003	503-303
14181-05020	32.00 x 42.00 x 5.0mm	VE-3002	503-302
14181-05010	32.00 x 42.00 x 5.0mm	VE-3002	503-302
14181-11010	38.00 x 46.60 x 5.0mm	VE-3003	503-303
14181-11020	38.00 x 46.60 x 5.0mm	VE-3003	503-303
14181-12010		VE-3004	503-304
14181-17C00	32.00 x 42.00 x 5.0mm	VE-3002	503-302
14181-17E00	28.70 x 42.00 x 2.50mm	VE-3024	503-324
14181-18C00	32.00 x 42 x 5.5mm	VE-3022	503-322
14181-23E00	29.40 x 38.80 x 5.0mm	VE-3026	503-326
14181-42A00		VE-3004	503-304
14181-45C00		VE-3019	503-319
14181-38A00		VE-3019	503-319
14181-40C00	35.20 x 41.75 x 3.00mm	VE-3023	503-323
14181-46E00	33.30 x 42.00 x 5.00mm	VE-3025	503-325
14181-45D00	29.40 x 38.80 x 5.0mm	VE-3026	503-326
14181-42A00	34.20 x 43.20 x 5.0mm	VE-3028	503-328
14172-27C30		VE-3029	503-329
14172-28C30	40.40 x 49.50 x 1.0mm	VE-3030	503-330

Sudco Part Number to OEM Cross Reference
Exhaust Pipe Gaskets

Yamaha

OEM Reference	Dimensions I.D. x O.D. x Thickness	Vesrah Reference	Order No.
3MT-14613-00-00		VE-2001	503-201
3RV-14623-00-00		———	
132-14613-00-00		———	
3PA-14613-10-00		VE-2002	503-202
3PA-14613-00-00		———	
152-14613-00-00		———	
4BE-14613-00-00	38.20 x 45.60 x 4.8mm	VE-2004	503-204
4TR-14613-00-00	38.20 x 45.60 x 4.8mm	———	
341-14613-00-00	38.20 x 45.60 x 4.8mm	———	
2GV-14613-00	38.20 x 45.60 x 4.8mm	———	
90430-38054	39.10 x 49.00 x 4.8mm	VE-2005	503-205
4X4-14623-10-00		VE-2010	503-210
4X4-14613-00-00		VE-2010	503-210
4X7-14613-00-00		VE-2011	503-211
4H7-14613-00-00	30.10 x 39.00 x 3.2mm	VE-2012	503-212
3R4-14613-00-00		VE-2014	503-214
5Y1-14613-00-00	32.00 x 40.50 x 3.0mm	VE-2018	503-218
2GU-14613-10-00	56.60 x 80.30 x 5.0mm	VE-2023	503-223
3DM-14613-00-00		VE-2024	503-224
22F-14613-00-00		———	
3GD-14613-00-00	38.50 x 49.50 x 5.0mm	VE-2025	503-225
3YF-14613-01-00	32.00 x 42.00 x 3.0mm	VE-2026	503-226
4BR-14613-00-00	30.50 x 39.10 x 5.0mm	VE-2027	503-227
3EG-14613-00-00	42.52 x 55.36 x 3.40mm	VE-2028	503-228
4FM-14613-00-00	37.20 x 44.75 x 3.50mm	VE-2029	503-229

Note: 503-223 is a muffler gasket, not an exhaust pipe gasket.

Valve Cover Gaskets & Cam End Rubber Plugs

Vesrah Valve Cover Gaskets & Cam End Plugs

Sold each. ***Made in Japan.***

Honda Street

Model	Year	Vlv.Cover Gasket	Cam End Rubber Plug
XL75	77-79	619-009	—
XL80S	80-85	619-009	—
XL100S	79-85	619-009	—
CB250 Nighthawk	93-05	619-014	—
CMX250C Rebel	85-87	619-014	—
CMX250C	96-97	619-014	—
CMX250C	99-12	619-014	—
CMX250C2	99-00	619-014	—
CMX250CD Rebel	1986	619-014	—
XL250R Dual Sport	82-83	619-005	—
XL250S Dual Sport	78-81	619-005	—
XL350R Dual Sport	84-85	619-023	—
CB400A Automatic	1978	619-007	—
CB400T Hawk	80-81	619-007	—
CB400T1 Hawk	78-79	619-007	—
CB400TII Hawk	78-79	619-007	—
CM400A Automatic	79-81	619-007	—
CM400C Custom	1981	619-007	—
CM400E	80-81	619-007	—
CM400T	79-81	619-007	—
CB450D Super Sport 450	1967	619-035	—
CB450K0	65-68	619-035	—
CB450K1-K7 Super Sport 450	68-74	619-035	—
CB450SC Nighthawk	82-86	619-007	—
CB450T Hawk	1982	619-007	—
CL450/K1-K6 Scrambler 450	67-74	619-035	—
CM450A Automatic	82-83	619-007	—
CM450C Custom	1982	619-007	—
CM450E	82-83	619-007	—
CB500K0/K1/K2 (4cyl.)	71-73	619-006	—
CB500T (twin)	75-76	619-035	—
CX500	78-79	619-004	—
CX500C Custom	79-82	619-004	—
CX500D Deluxe	79-81	619-004	—
FT500 Ascot	82-83	619-005	—
GL500 Silverwing	81-82	619-004	—
GL500I Interstate	81-82	619-004	—
VF500C V30 Magna	84-85	619-016	—
VF500F Interceptor	84-86	619-016	—
VT500C Shadow	83-86	619-015	—
VT500FT Ascot	83-84	619-015	—
XL500S Dual Sport	79-81	619-005	—
CB550F Super Sport	75-77	619-006	—
CB550/K1	74-75	619-006	—
CB550K	76-78	619-006	—
CBR600F Hurricane	87-90	619-044	—
CBR600F2 Hurricane	91-94	619-050	—
CBR600F3 Hurricane	95-98	619-050	—
CBR600SE	1998	619-050	—
CBR600SJR Replica	1996	619-050	—
VT600C Shadow VLX	88-89	619-015	—
VT600C Shadow VLX	91-97	619-015	—
VT600C Shadow VLX	99-07	—	—

Honda Street

Model	Year	V.Cover Gasket	Cam End Rubber Plug
VT600CD Deluxe	93-94	619-015	—
XL600R Dual Sport	83-87	619-024	—
XL600V Transalp	89-90	619-015	—
CX650C Custom	1983	619-004	—
CX650T Turbo	1983	619-004	—
GL650 Silverwing	1983	619-004	—
GL650I Silverwing Interstate	1983	619-004	—
NX650	88-89	619-024	—
XR650L Dual Sport	93-12	619-024	—
CB700SC Nighthawk S	84-86	619-018	—
VFR700F Interceptor	1986	619-041	—
VFR700F2 Interceptor	86-87	619-041	—
CB750 Nighthawk	91-03	619-018	—
CB750A Automatic	76-78	619-003	—
CB750F Super Sport	75-78	619-003	—
CB750K/K1/K2/K3/K4/K5	69-75	619-003	—
CB750K	76-78	619-003	—
VF750C V45 Magna	1988	619-019	—
VF750C Magna	94-03	619-047	—
VF750CD Magna Deluxe	95-96	619-047	—
VF750C2 Deluxe	97-00	619-047	—
VFR750F	90-97	619-047	—
CBR900RR	93-99	619-054	—
CB1000	94-95	619-043	—
CBR1000F Hurricane	87-88	619-043	—
CBR1000F Hurricane	90-91	619-043	—
CBR1000F Hurricane	93-96	619-043	—
GL1000 Goldwing	75-79	619-001	—
GL1000L Goldwing LTD	1976	619-001	—
VF1000R	85-86	619-019	—
GL1100 Goldwing	80-83	619-001	—
GL1100A Golden Aspencade	82-83	619-001	—
GL1100I Goldwing Interstate	80-83	619-001	—
ST1100	91-02	619-059	—
ST1100A (ABS)	92-02	619-059	—
VF1100C V65 Magna	83-86	619-021	—
VF1100S V65 Sabre	84-85	619-021	—
GL1200 Goldwing	1984	619-038	—
GL1200A Goldwing Aspencade	84-87	619-038	—
GL1200I Goldwing Interstate	84-87	619-038	—
GL1200L Goldwing LTD	1985	619-038	—
GL1200SEi Goldwing SEi	1986	619-038	—
GL1500 Goldwing	88-90	619-048	—
GL1500A Goldwing Aspencade	91-00	619-048	—
GL1500C Valkyrie	97-00	619-048	—
GL1500C Valkyrie	2003	619-048	—
GL1500CD Valkyrie	01-03	619-048	—
GL1500CF Interstate	99-01	619-048	—
GL1500CT Valkyrie Tourer	97-00	619-048	—
GL1500I Goldwing Interstate	91-96	619-048	—
GL1500SE Goldwing SE	90-00	619-048	—

Valve Cover Gaskets & Cam End Rubber Plugs

Honda ATV

Model	Year	V.Cover Gasket	Cam End Rubber Plug
ATC200X	86-87	619-026	———
TRX200	90-91	619-026	———
TRX200D	91-97	619-026	———
TRX200SX	86-88	619-026	———
ATC250ES	85-87	619-005	———
ATC250SX	85-87	619-005	———
TRX250	85-87	619-005	———
TRX400EX Fourtrax 400EX	99-00	619-056	———
TRX400EX Sporttrax 400EX	01-08	619-056	———
TRX400X	09-12	619-056	———

Honda Dual Sport & Offroad

XL75	77-79	619-009	———
XR75	77-79	619-009	———
CRF80F	04-12	619-009	———
XL80S	80-85	619-009	———
XR80	79-84	619-009	———
XR80R	85-88	619-009	———
XR80R	90-91	619-009	———
XR80R	93-03	619-009	———
CRF100F	04-09	619-009	———
XL100S	79-85	619-009	———
XR100	81-84	619-009	———
XR100R	85-03	619-009	———
TR200 Fatcat	86-87	619-026	———
XL250R	82-83	619-005	———
XL250S	78-81	619-005	———
XR250R	81-82	619-005	———
XR250R	95-04	619-022	———
XL350R	84-85	619-023	———
XR350R	83-85	619-023	———
XR400R	96-04	619-056	———
XL500S	79-81	619-005	———
XR500	79-80	619-005	———
XR500R	81-82	619-005	———
XR500R	83-84	619-024	———
XL600R Dual Sport	83-87	619-024	———
XL600V Transalp	1989-	619-015	———
XR650R	85-00	619-024	———
NX650	88-89	619-024	———
XR650L Dual Sport	93-12	619-024	———

Kawasaki Street

KL250D2-D22 KLR250 Dual	85-05	619-615	———
EN450A1-A6 LTD454	85-90	619-616	———
EN500A1-A7 Vulcan 500	90-96	619-616	———
EN500C1-C10 Vulcan LTD	96-05	619-616	———
EN500C6F-C9F	06-09	619-616	———
EX500A1-A7	87-93	619-616	———
EX500D1/D2/D3 Ninja 500	94-96	619-616	———
EX500D4-D12 Ninja 500R	97-05	619-616	———
EX500D6F/D7F/D9F Ninja 500R	06-09	619-616	———
KZ550A1/A2/A3	80-82	619-604	620-991
KZ550A4	1983	619-609	620-991
KZ550C1/C2/C3/C4 LTD	80-83	619-604	620-991
KZ550D1 GPz	1981	619-604	620-991
KZ550F1 Spectre	1983	619-609	620-991
KZ550F2 LTD	1983	619-609	620-991
KZ550H1/H2 GPz	82-83	619-609	620-991
KZ550M1 LTD	1983	619-609	620-991
ZX550A1/A2 GPz	84-85	619-609	620-991
KL600A1/B1/B2 KLR600	84-86	619-617	———
ZL600A1/A2 Eliminator	85-86	619-614	———
ZL600B2/B3 Eliminator 600	96-97	619-614	———
ZX600A1/A2/A3 Ninja 600R	85-87	619-614	———
ZX600B1 Ninja 600RX	1987	619-614	———
ZX600C1-C10 Ninja 600R	88-97	619-614	———

Kawasaki Street

Model	Year	V.Cover Gasket	Cam End Rubber Plug
KL650A1-A19 KLR650	87-05	619-617	———
KL650A6F-ECF KLR650	06-12	619-617	———
KL650B2/B3 Tengai KLR650	90-91	619-617	———
KZ650B1/B2/B2A	77-78	619-613	620-991
KZ650B3	1979	619-605	620-991
KZ650C1/C2 Custom	77-78	619-613	620-991
KZ650C3 Custom	1979	619-605	620-991
KZ650D1 SR	1978	619-613	620-991
KZ650D2 SR	1979	619-605	620-991
KZ650E1 LTD	1980	619-605	620-991
KZ650F1	1980	619-605	620-991
KZ650H1/H2 CSR	81-82	619-608	620-991
KZ650H3 CSR	1983	619-610	620-991
KZ700A1	1984	619-610	620-991
ZN700A1/A2 LTD	84-85	619-610	620-991
KZ750B1/B2/B3/B4 (2-cyl.)	76-79	619-602	———
KZ750E1/E2/E3	80-82	619-608	620-991
KZ750F1 LTD Shaft	1983	619-610	620-991
KZ750G1 LTD (2-cyl.)	1980	619-602	———
KZ750H1/H2/H3 LTD	80-82	619-608	620-991
KZ750H4 LTD	1983	619-610	620-991
KZ750L3	1983	619-610	620-991
KZ750N1/N2 Spectre	82-83	619-610	620-991
KZ750R1 GPz	1982	619-610	620-991
ZX750A1/A2/A3 GPz	83-85	619-610	620-991
ZX750E1/E2 GPz Turbo	84-85	619-610	620-991
Z1/A/B-900	73-75	619-601	620-990
KZ900A4/A5	76-77	619-601	620-990
KZ900B1 LTD	1976	619-601	620-990
ZL900A1/A2 Eliminator	85-86	619-611	———
ZX900A1/A2/A3 Ninja	84-86	619-611	———
KZ1000A1/A2	77-78	619-601	620-990
KZ1000A3/A3A/A4 MKII	79-80	619-603	620-990
KZ1000B1/B2 LTD	77-78	619-601	620-990
KZ1000B3/B4 LTD	79-80	619-603	620-990
KZ1000C1/C1A Police	1978	619-601	620-990
KZ1000C2-C4 Police	79-81	619-603	620-990
KZ1000D1 Z1R	1978	619-601	620-990
KZ1000D3 Z1R	1980	619-603	620-990
KZ1000E1/E2 Shaft ST	79-80	619-603	620-990
KZ1000G1 LTD Classic	1980	619-603	620-990
KZ1000J1/J2/J3	81-83	619-606	620-992
KZ1000K1/K2 LTD	81-82	619-606	620-992
KZ1000M1/M2 CSR	81-82	619-606	620-992
KZ1000P1-P21 Police	82-02	619-606	620-992
KZ1000R1/R2 Replica	82-83	619-606	620-993
ZX1000B1/B2/B3 Ninja ZX-10	88-90	619-619	———
ZG1000A1-A20 Concours	86-05	619-611	———
ZG1000A6F	2006	619-611	———
ZL1000A1 Eliminator	1987	619-611	———
ZX1000A1/A2 Ninja 1000R	86-87	619-611	———
KZ1100AI/A2/A3 Shaft	81-83	619-606	620-992
KZ1100BI/B2 GPz	81-82	619-606	620-993
KZ1100D1/D2 Spectre	82-83	619-606	620-992
KZ1100L1 LTD Shaft	1983	619-606	620-992
ZN1100BI/B2 LTD	84-85	619-606	620-992
ZX1100AI/A2 GPz	83-84	619-606	620-993
ZX1100C1-C4 Ninja ZX-11	90-93	619-619	———
ZX1100D1-D9 Ninja ZX-11	93-01	619-619	———
ZX1100E1/E2/E3 GPz 1100	95-97	619-619	———
ZX1100F1 GPz 1100 (ABS)	1996	619-619	———
ZG1200A Voyager XII	1986	619-622	———
ZG1200B Voyager XII	87-03	619-622	———
KZ1300A1-A4	79-82	619-607	———
KZ1300B2 Touring	1980	619-607	———
ZN1300A1-A6 Voyager	83-87	619-607	———

Valve Cover Gaskets & Cam End Rubber Plugs

Kawasaki ATV

Model	Year	V. Cover Gasket	Cam End Rubber Plug
KSF250A1-A17 Mojave 250	87-03	619-615	———
KSF250A18 KFX250 Mojave	2004	619-615	———

Kawasaki Dual Sport

KL250D2-D22 KLR250 Dual	85-05	619-615	———
KL600A1 KLR600	1984	619-617	———
KL600B1/B2 KLR600	85-86	619-617	———
KL650A1-A19 KLR650	87-05	619-617	———
KL650A6F-ECF KLR650	06-12	619-617	———
KL650B1/B2 Tengai KLR650	90-91	619-617	———

Suzuki Street

GS250TT/TX	80-81	———	620-981
GS300LZ/LD	82-83	———	620-981
GS300LF	1985	———	620-981
GS400B/XB/C/XC	77-78	619-301	620-981
GS425N/EN/LN	1979	619-301	620-981
GS450ET/EX/EZ/ED	80-83	———	620-981
GS450GAZ/GAD Automatic	82-83	———	620-981
GS450GAF Automatic	1985	———	620-981
GS450LT/LX/LZ/LD	80-83	———	620-981
GS450LF/LG/LH/LJ	85-88	———	620-981
GS450ST/SX	80-81	———	620-981
GS450TX/TZ/TXZ/TXD	81-83	———	620-981
GS500E K-S	89-94	619-327	———
GS500E T-Y	95-99	619-327	———
GS500K1-K3	00-03	619-327	———
GS500F K4-L0	04-10	619-327	———
GS550B/C/EC/N/EN/ET	77-80	619-304	620-981
GS550LN/LT/LX/LZ	79-82	619-304	620-981
GS550MZ	1982	———	620-981
GS550TX	1981	619-304	620-981
GSF600ST/SV/SW/SX Bandit	96-99	619-328	———
GSF600SY/SK1-SK3 Bandit	00-03	619-328	———
GSX600FJ-FK6 Katana	88-06	619-328	———
GSX-R600WN/WP	92-93	619-330	———
RF600RR/RS/RT	94-96	619-331	———
GR650D/XD Tempter	1983	619-327	———
GS650EX/EZ	81-82	———	620-981
GS650GX	1981	———	620-981
GS650GZ/GD	82-83	———	620-981
GS650GLX/GLZ	81-82	———	620-981
GS650GLD	1983	———	620-981
GS650MD Katana	1983	———	620-981
XN85 Turbo	1983	———	620-981
GS700EF/ESF	1985	619-326	———
GS750B/C/EC/N/EN	77-79	619-302	620-981
GS750ET/EX	80-81	619-305	620-981
GS750EZ	1982	619-307	620-981
GS750ED/ESD	1983	619-326	———
GS750LN	1979	619-302	620-981
GS750LT/LX	80-81	619-305	620-981
GS750SD Katana	1983	619-320	620-981
GS750TZ/TD	82-83	619-307	620-981
GSX750FK-FV Katana	89-97	619-329	———
GSX750FW-FK6 Katana	98-06	619-328	———
GSX-R750RG	1986	619-328	———
GSX-R750G/H	86-87	619-328	———
GSX-R750J/K	88-89	619-329	———
GSX-R750L/M/N	90-92	619-328	———
GSX-R750WP/WR/WS	93-95	619-330	———
GS850GN/GT/GX	79-81	619-302	620-981
GS850GZ/GD	82-83	———	620-981
GS850GLT/GLX	80-81	619-302	620-981
GS850GLZ/GLD	82-83	———	620-981
RF900RR/RS/RT/RV	94-97	619-331	———

Suzuki Street

Model	Year	V. Cover Gasket	Cam End Rubber Plug
RF900RZS	1995	619-331	———
GS1000C/EC/N/EN/ET	78-80	619-303	620-981
GS1000GT/GLT/GX/GLX	80-81	619-303	620-981
GS1000LN	1979	619-303	620-981
GS1000SN/ST	79-80	619-303	620-981
GS1000SZ Katana	1982	619-305	620-981
GS1100ET/EX	80-81	619-305	620-981
GS1100EZ	1982	619-307	620-981
GS1100ED/ESD	82-83	619-320	620-981
GS1100GZ/GLZ/GD/GLD	82-83	619-306	620-981
GS1100GKZ/GK2/GKD/GKE	82-84	619-306	620-981
GS1100LT	1980	619-305	620-981
GS1100SD Katana	1983	619-320	620-981
GSX1100FJ-FP Katana	88-93	619-329	———
GSX1100GM/GN/GP Shaft	91-93	619-329	———
GSX-R1100G/H/J	86-88	619-329	———
GSX-R1100K/L/M/N	89-92	619-329	———
GSX-R1100WP-WW	93-98	619-330	———
GSF1200SV-SK5 Bandit	97-05	619-329	———
GSF1200SAV Bandit	1997	619-329	———

Yamaha Street

SRX250T/TC	1987	619-209	———
FZR400U/SUC-A/SAC	88-90	619-215	———
XS400J/K Maxim	82-83	619-205	620-998
XS400RJ/RK Seca	82-83	619-205	620-998
XJ550H/J/K Maxim	81-83	619-206	———
XJ550RH/RJ/RK Seca	81-83	619-206	———
FJ600L/LC/N/NC	84-85	619-206	———
FZ600S/SC/T/TC/U/UC	86-88	619-206	———
FZR600W/WC/AC	89-90	619-215	———
FZR600RA/RAC-RL/RLC	90-99	619-215	———
YX600S/SC-A/AC Radian	86-90	619-206	———
XJ650G/H Maxim	80-81	619-202	620-998
XJ650J/K Maxim	82-83	619-213	———
XJ650LH Midnight Maxim	1981	619-202	620-998
XJ650LH Midnight Maxim	1981	619-202	620-998
XJ650LJ/LK Seca Turbo	82-83	———	620-998
XJ650RJ Seca	1982	619-202	620-998
FZ700T/TC	1987	619-211	———
XJ700N/NC/S/SC Maxim	85-86	619-213	———
XJ700X Maxim X	85-86	619-211	———
FZ750N/S/SC	85-86	619-211	———
FZ750U/UC	1988	619-211	———
FZR750RT/RU	87-88	619-211	———
XJ750J/K Maxim	82-83	619-213	———
XJ750MK Midnight Maxim	1983	619-213	———
XJ750RH/RJ/RK Seca	82-83	619-213	———
XS750D/2D/E/F	77-79	619-201	620-998
XS750SE/SF Special	78-79	619-201	620-998
YZF750RF/RFC	1994	619-211	———
YZF750RH/RHC/RJ/RJC	96-97	619-211	———
YZF750RK/RKC	1998	619-211	———
XS850G/H	80-81	619-201	620-998
XS850LG/LH Midnight Special	80-81	619-201	620-998
XS850SG/SH Special	80-81	619-201	620-998
FZR1000T/TC/U/UC	87-88	619-211	———
FZR1000W/WC-G/GC	89-95	619-211	———
GTS1000AE/AEC/AF/AFC	93-94	619-211	———
YZF1000RJ/RJC	1997	619-211	———
FJ1100L/LC/N/NC	84-85	619-210	———
XJ1100J Maxim	1982	619-203	620-998
XS1100E/F/G/H	78-81	619-203	620-998
XS1100LG/LH Midnight Special	80-81	619-203	620-998
XS1100SF/SG/SH Special	79-81	619-203	620-998

Valve Cover Gaskets & Cam End Rubber Plugs

Yamaha Street

Model	Year	V. Cover Gasket	Cam End Rubber Plug
FJ1200S/SC/T/TC	86-87	619-210	———
FJ1200W/WC/A/AC	89-90	619-210	———
FJ1200B/BC/D/DC	91-92	619-210	———
FJ1200AD/ADC/AE/AEC(ABS)	92-93	619-210	———

Yamaha Dual Sport & Offroad

XT250L/LC Dual Sport	1984	619-209	———
TT350S/T	86-87	619-209	———
XT350N/NC-M/MC Dual Sport	85-00	619-209	———

Sudco Part Number to OEM Cross Reference
Valve Cover Gaskets

Honda

OEM Reference	Vesrah Ref	Order No.
12314-MAF-000	VV-1048	619-048
12314-MN5-000	VV-1048	619-048
12316-283-310A, 12393-283-010B	VV-1015	619-035
12328-413-830	VV-1014	619-007
12328-415-000	VV-1004	619-004
12328-MG9-000	VV-1038	619-038
12391-149-003	VV-1019	619-009
12391-286-306	VV-1008	619-031
12391-300-306	VV-1003	619-003
12391-323-000	VV-1013	619-006
12391-333-000	VV-1006	619-030
12391-371-006	VV-1001	619-001
12391-425-010	VV-1002	619-002
12391-HB3-004	VV-1036	619-026
12391-HB3-013	VV-1036	619-026
12392-HC4-005	VV-1005	619-005
12391-KAS-901	VV-1033	619-023
12391-KB4-670	VV-1024	619-014
12391-KCY-671	VV-1056	619-056
12391-KE7-010	VV-1026	619-016
12391-KF0-014	VV-1033	619-023
12391-KR3-000	VV-1024	619-014
12391-KR6-010	VV-1032	619-022
12391-MB4-000	VV-1031	619-021
12391-MB6-000	VV-1029	619-019
12391-MF5-750	VV-1025	619-015
12391-MJ0-000	VV-1028	619-018
12391-MJ1-761	VV-1028	619-018
12391-ML7-000	VV-1041	619-041
12391-MM5-000	VV-1043	619-043
12391-MN4-000	VV-1044	619-044
12391-MT3-000	VV-1059	619-059
12391-MT4-000	VV-1047	619-047
12391-MV9-670	VV-1050	619-050
12391-MW0-000	VV-1054	619-054

Kawasaki

11009-1365	VV-4017	619-617
11009-1483	VV-4016	619-616
11009-1497	VV-4014	619-614
11009-1559	VV-4022	619-622
11009-1607	VV-4015	619-615
11009-1724	VV-4019	619-619
11060-1280,11009-1280	VV-4011	619-609
11060-1415, 11009-1025	VV-4003	619-613
11060-1416, 11009-1065	VV-4006	619-605
11060-1427, 11023-008	VV-4002	619-602
11060-1471, 11009-1095	VV-4009	619-607
11060-1537, 11009-1237	VV-4008	619-608

Sudco Part Number to OEM Cross Reference
Valve Cover Gaskets

Kawasaki

OEM Reference	Vesrah Ref	Order No.
11060-1581, 11009-1050	VV-4004	619-603
11060-1582, 11009-1058	VV-4005	619-604
11060-1603, 11009-1274	VV-4012	619-610
11060-1605, 11023-006	VV-4001	619-601
11060-1691, 11060-1535, 11009-1205	VV-4007	619-606

Suzuki

11173-06B02	VV-3024	619-329
11173-15502	VV-3017	619-327
11173-17E11	VV-3025	619-330
11173-21E00	VV-3026	619-331
11173-27A02	VV-3023	619-328
11173-31302	VV-3016	619-326
11173-44005, 11173-44004	VV-3001	619-301
11173-45003, 11173-45002, 11173-45001	VV-3002	619-302
11173-45004-H17, 11173-45004	VV-3002	619-302
11173-47004-H17, 11173-47004	VV-3005	619-304
11173-49004-H17, 11173-49004	VV-3003	619-303
11173-49022, 11173-49021	VV-3019	619-306
11173-49201	VV-3006	619-305
11173-49207-H17, 11173-49203	VV-3006	619-305
11173-49224-H17, 11173-49224	VV-3007	619-307
11173-49224-H17, 11173-49222	VV-3020	619-320

Yamaha

1J7-11193-00-00	VV-2001	619-201
1WG-11193-00-00	VV-2015	619-215
2H7-11193-00-00	VV-2003	619-203
3GM-11193-00-00, 1AA-11193-00-00	VV-2011	619-211
3KM-1113-00-00, 4G0-11193-00-00	VV-2014	619-206
4H7-11193-00-00	VV-2002	619-202
5EA-11193-00-00, 36Y-11193-00-00	VV-2010	619-210
5G2-11193-00-00	VV-2013	619-213
12R-11193-00-00	VV-2008	619-205
30X-11193-00-00	VV-2009	619-209

620-992

620-981

Sudco Part Number to OEM Cross Reference
Camshaft End Rubber Plugs

Kawasaki

OEM Reference	Vesrah Ref.	Order No.
92066-017 (4 pc. set)	AP-4001-4	620-990
92055-1104 all rubber (4 pc. set)	AP-4004-4	620-993
92055-1106 metal/rubber (4 pc. set)	AP-4003-4	620-992
92066-1111 (4 pc. set)	AP-4002-4	620-991

See page 346 for Kawasaki Billet Cam Cover End Plugs.

Suzuki

09241-23002 (4 pc. set)	AP-3001-4	620-981

Yamaha

1J7-11138-00-00 (4 pc. set)	AP-2002-4	620-998

Valve Cover Bolt Seals

621-903

621-900

621-904

Valve (Head) Cover Bolt Seals

Replacement bolt seal for valve cover bolts. Sold in 4 pc., 6 pc., and 10 pc. sets. ***Made in Japan.***

Honda Street

Model	Qt Req.	Year	Order No.
CM185T Twinstar	2	78-79	621-903
CM200T Twinstar	2	80-82	621-903
CB250 Nighthawk	2	91-97	621-903
CB250 Nighthawk 250	2	99-07	621-903
CM250C Custom	2	82-83	621-903
CMX250C Rebel	2	85-87	621-903
CMX250C	2	96-97	621-903
CMX250C	2	99-12	621-903
CMX250CD Rebel	2	1986	621-903
CMX250C2	2	99-00	621-903
NX250	8	88-90	621-900
VTR250 Interceptor	8	89-90	621-902
CB400F CB1	8	89-90	621-900
CMX450C Rebel	4	86-87	621-900
CX500	4	78-79	621-903
CX500C Custom	4	79-82	621-903
CX500D Deluxe	4	79-81	621-903
CX500TC Turbo	4	1982	621-903
GL500 Silverwing	4	81-82	621-903
GL500I Silverwing Interstate	4	81-82	621-903
VF500C V30 Magna	8	84-85	621-902
VF500F V30 Interceptor	8	84-86	621-902
CB600F (599)	6	2004	621-900
CB600F (599)	6	2006	621-900
CBR600F Hurricane	8	87-90	621-900
CBR600F2 Hurricane	6	91-94	621-900
CBR600F3 Hurricane	6	95-98	621-900
CBR600F4 Hurricane	3	99-06	621-900
CBR600RR	4	03-08	621-900
CBR600SJR Replica	6	1996	621-900
CBR600SE	6	1998	621-900
FSC600 Silverwing	4	2002	621-900
FSC600A Silverwing	4	03-06	621-900
FSC600D Silverwing	4	03-06	621-900
VT600C Shadow VLX	4	88-89	621-900
VT600C Shadow VLX	4	91-97	621-900
VT600C Shadow VLX	4	99-07	621-900
VT600CD Shadow VLX Deluxe	4	93-07	621-900
VT600CD2 Shadow VLX Deluxe	4	99-00	621-900
XL600V Transalp	4	89-90	621-900
CB650	6	1979	621-901
CB650 up to engine # 210624	2	1980	621-901
CB650 from engine # 210625 on	2	1980	621-902
CB650	2	81-82	621-902
CB650C up to engine # 210624	2	1980	621-901
CB650C from engine # 210625 on	2	1980	621-902
CB650C Custom	2	81-82	621-902
CB650SC Nighthawk 650	2	1982	621-902

Honda Street

Model	Qt Req.	Year	Order No.
CX650C Custom	4	1983	621-903
CX650T Turbo	4	1983	621-903
GL650 Silverwing	4	1983	621-903
GL650I Silverwing Interstate	4	1983	621-903
NT650 Hawk GT	4	88-91	621-904
CB700SC Nighthawk S	8	84-86	621-900
VF700C Magna	8	84-87	621-904
VF700F Interceptor	8	84-87	621-904
VF700S Sabre	8	84-87	621-904
VFR700F Interceptor	8	1986	621-900
VFR700F2 Interceptor	8	86-87	621-900
CB750 Nighthawk 750	8	91-93	621-900
CB750 Nighthawk 750	8	95-03	621-900
CB750C Custom	8	80-82	621-902
CB750F Super Sport up to engine # 2104665	8	79-80	621-901
CB750F Super Sport from engine # 2104666	8	80-82	621-902
CB750K up to engine # 2106514	8	79-80	621-901
CB750K from engine # 2106515	8	80-82	621-902
CB750SC Nighthawk	8	82-83	621-902
RFV750R RC45	8	1994	621-900
VF750C V45 Magna	8	82-83	621-904
VF750C V45 Magna	8	1988	621-904
VF750C Magna	8	94-96	621-900
VF750C Magna	8	98-03	621-900
VF750CD Magna Deluxe	8	95-96	621-900
VF750C2 Magna Deluxe	8	97-00	621-900
VF750F V45 Interceptor	8	83-84	621-904
VF750S V45 Sabre	8	82-83	621-904
VFR750F Interceptor	8	1986	621-900
VFR750F	8	90-97	621-900
VT750DC Shadow Spirit 750	4	01-02	621-904
VT750DCA Shadow Spirit 750	4	03-06	621-904
VT750DCB Shadow Spirit 750	4	03-06	621-904
VFR800 Interceptor	8	02-07	621-900
VFR800A Interceptor ABS	8	02-07	621-900
VFR800FI Interceptor	8	98-01	621-900
CB900C Custom	8	80-82	621-902
CB900F Super Sport	8	81-82	621-902
CB900F (919)	6	02-07	621-900
CBR900RR	6	93-99	621-900
CBR929RE	4	2001	621-900
CBR929RR	4	00-01	621-900
CBR954RR	4	02-03	621-900
CB1000	8	94-95	621-900
CB1000C Custom	8	1983	621-902
CBR1000F Hurricane	8	87-88	621-900
CBR1000F Hurricane	8	90-91	621-900
CBR1000F Hurricane	8	93-96	621-900

Valve Cover Bolt Seals

621-902

620-985

Honda Street

Model	Qt Req.	Year	Order No.
CBR1000RR	4	04-07	621-900
CBX1000 (1047cc)	8	79-82	621-901
GL1000 Goldwing	8	75-79	621-903
GL1000L Goldwing LTD	8	1976	621-903
RVT1000R RC51	6	00-06	621-900
VF1000F Interceptor	8	1984	621-904
VF1000R	8	85-86	621-904
VTR1000F Super Hawk	8	98-05	621-900
CB1100F Super Sport	8	1983	621-902
CBR1100XX Blackbird	6	97-03	621-900
GL1100 Goldwing	8	80-83	621-903
GL1100A Goldwing Aspencade	8	82-83	621-903
GL1100I Goldwing Interstate	8	80-83	621-903
ST1100	8	91-02	621-900
ST1100A ABS	8	92-02	621-900
VF1100C V65 Magna	8	83-86	621-904
VF1100S V65 Sabre	8	83-86	621-904
GL1200 Goldwing	8	1984	621-904
GL1200A Goldwing Aspencade	8	84-87	621-904
GL1200I Goldwing Interstate	8	84-87	621-904
GL1200L Goldwing LTD	8	1985	621-904
GL1200SEi Goldwing SEi	8	1985	621-904
ST1300		03-11	621-900
ST1300A ABS		03-11	621-900
GL1500 Goldwing	12	88-90	621-904
GL1500A Goldwing Aspencade	12	91-00	621-904
GL1500C Valkyrie	12	97-00	621-904
GL1500C Valkyrie	12	2003	621-904
GL1500CD Valkyrie	12	01-03	621-904
GL1500CT Valkyrie Tourer	12	97-00	621-904
GL1500CF Valkyrie Interstate	12	99-01	621-904
GL1500I Goldwing Interstate	12	91-96	621-904
GL1500SE Goldwing SE	12	90-00	621-904
GL1800 Goldwing	11	01-07	621-900
GL1800A Goldwing Interstate	11	01-05	621-900
NRX1800DA/DB Rune	11	2004	621-900
NRX1800EA/EB Rune	11	2004	621-900

Honda ATV

TRX450R	3	04-07	621-900

Honda Dual Sport & Offroad

CRF250R	2	04-08	621-900
CRF250X	2	04-08	621-900
NX250	3	88-90	621-900
CRF450R	3	02-08	621-900
CRF450X	3	04-08	621-900

Kawasaki Street

Model	Qt Req.	Year	Order No.
EL250B2/B3 Eliminator 250	4	88-89	620-985
EL250E1/E2/E3/E4 Eliminator 250 HS	4	91-94	620-985
EX250E1/E2 Ninja 250R	4	86-87	620-985
EX250F1-F19 Ninja 250R	4	88-05	620-985
EX250F6F/F7F/F8F Ninja 250R	4	06-08	620-985
KL250D2-D22 KLR250	4	85-05	620-985
KL250G4/G5/G6/G7 Super Sherpa	3	00-03	621-960
EN450A1-A6 LTD454	6	85-90	620-994
EN500A1-A7 Vulcan 500	6	85-90	620-994
EN500C1-C10 Vulcan 500 LTD	6	96-05	620-994
EN500C6F/C7F/C8F Vulcan 500 LTD	6	06-08	620-994
EX500A1-A7	6	87-93	620-994
EX500D1/D2/D3 Ninja 500	6	94-96	620-994
EX500D4-D12 Ninja 500R	6	97-05	620-994
EX500D6F-D8F Ninja 500R	6	06-08	620-994
ZL600A1/A2 Eliminator	6	86-87	620-994
ZL600B2/B3 Eliminator	6	96-97	620-994
ZX600A1/A2/A3 Ninja 600R	6	85-87	620-994
ZX600B1 Ninja 600RX	6	1987	620-994
ZX600C1-C10 Ninja 600R	6	88-97	621-960
ZX600D1/D2/D3/D4 Ninja ZX-6	8	90-93	621-960
ZX600E1-E10 Ninja ZX-6	8	93-02	621-960
ZX600E11/E12 ZZR600	8	03-04	621-960
ZX600F1/F2/F3 Ninja ZX-6R	6	95-97	621-960
ZX600G1/G2 Ninja ZX-6R	6	98-99	621-960
ZX600J1/J2/J3 Ninja ZX-6R	6	00-02	621-960
ZX600J4/J6F/J7F ZZR600	6	05-07	621-960
ZX600K1/M1 Ninja ZX-6RR	6	03-04	621-960
ZX600N1/N6F Ninja ZX-6RR	6	05-06	621-960
ZX600P7F Ninja ZX-6R	6	2007	621-960
ZX636B1/B2/C1/C6F/D6F ZX-6R	6	03-07	621-960
EX650A6F/A7F Ninja 650R	4	06-07	621-960
VN700A1 Vulcan	6	1985	620-994
VN750A2-A21 Vulcan 750	6	85-05	620-994
VN750A6F Vulcan 750	6	2006	620-994
ZR750K1/K6F Z750S	6	05-06	621-960
ZX750F1-F4 Ninja 750R	8	87-90	621-960
ZX750H1/H2 Ninja ZX-7	8	89-90	621-960
ZX750J1/J2 Ninja ZX-7	6	91-92	621-960
ZX750K1/K2 Ninja ZX-7R	6	91-92	621-960
ZX750L1/L2 /L3 Ninja ZX-7	6	93-95	621-960
ZX750M1/M2 Ninja ZX-7R	6	93-94	621-960
ZX750N1 Ninja ZX-7RR	6	1996	621-960
ZX750P1-P8 Ninja ZX-7R	6	96-03	621-960
VN800A1-A11 Vulcan 800	6	95-05	621-960
VN800B1-B10 Vulcan 800 Classic	6	96-05	621-960
VN800C Vulcan 800 Drifter	6		621-960
VN800E1-E6F Vulcan 800 Drifter	6	01-06	621-960
VN900B6F/B7F Vulcan 900 Classic	6	06-07	621-960
VN900C7F Vulcan 900 Custom	6	2007	621-960
VN900D6F/D7F Vulcan 900 Classic LT	6	06-07	621-960
ZL900A1/A2 Eliminator	6	85-86	620-994
ZX900A1/A2/A3 Ninja 900R	6	84-86	620-994
ZX900B1/B/B3/B4 Ninja ZX-9R	6	94-97	621-960
ZX900C1/C2 Ninja ZX-9R	6	98-99	621-960

Valve Cover Bolt Seals

Kawasaki Street

Model	Qt Req.	Year	Order No.
ZX900E1/E2 Ninja ZX-9R	6	00-01	621-960
ZX900F1/F2 Ninja ZX-9R	6	02-03	621-960
ZG1000A1-A20 Concours	6	86-05	620-994
ZG1000A6F Concours	6	2006	620-994
ZL1000A1 Eliminator	6	1987	620-994
ZR1000A1/A2/A3/A4/A6F/A7F Z1000	6	03-07	621-960
ZX1000A1/A2 Ninja 1000R	6	86-87	620-994
ZX1000B1/B2/B3 Ninja ZX-10	6	88-90	621-960
ZX1000C1/C2 Ninja ZX-10R	6	04-05	621-960
ZX1000D6F/D7F Ninja ZX-10R	6	06-07	621-960
ZR1100A1/A2/A3/A4	8	92-95	621-960
ZR1100C3/C4 ZRX1100	6	99-00	621-960
ZX1100C1-C4 Ninja ZX-11	6	90-93	621-960
ZX1100D1-D9 Ninja ZX-11	6	93-01	621-960
ZX1100E1/E2/E3 GPz	6	95-97	621-960
ZX1100\F1 GPz (ABS)	6	1996	621-960
ZG1200A1/B1-B17 Voyager XII	8	86-03	621-960
ZR1200A1/A2/A3/A4/A5 ZRX1200	6	01-05	621-960
ZX1200A1/A2 Ninja ZX-12R	7	00-01	621-960
ZX1200B1-B4 Ninja ZX-12R	7	02-05	621-960
ZX1200C1-C4 ZZR1200	6	02-05	621-960

Kawasaki ATV

KSF250A1-A17 Mojave 250	4	00-01	621-985
KSF250A18 KFX250 Mojave	4	2004	621-985
KSF450B8F KFX450R	3	2008	621-960

Kawasaki Dual Sport & Offroad

KL250D2-D22 KLR250	4	85-05	620-985
KL250G4/G5/G6/G7 Super Sherpa	3	00-03	621-960
KLX250D2/D3/D4 KLX250R	3	94-96	621-960
KX250H6F/H7F KLX250S	3	06-07	621-960
KX250N1/N2 KX250F	3	04-05	621-960
KX250T6F/T7F KX250F	2	06-07	621-960
KLX300A2-A10 KLX300R	3	97-05	621-960
KLX300A6F/A7F	3	06-07	621-960
KLX450A8F KLX450R	3	2008	621-960
KX450D6F/D7F	3	06-07	621-960
KL600A1/B2/B2 KLR600	4	84-86	620-985
KL650A1-A9 KLR650	4	87-95	620-985
KL650A10-A19 KLR650	4	96-05	621-960
KL650A6F/A7F KLR650	4	06-07	621-960
KL650B2/B2 Tengai KLR650	4	90-91	620-985
KL650E8F KLR650	4	2008	621-960
KLX650A1/A2/A3 KLX650R	3	93-95	621-960
KLX650C1-C4 Dual Sport	3	93-96	621-960
KLX650D1 KLX650R	3	1996	621-960

Yamaha Street

SRX250T/TC	5	1987	621-922
XT250L/LC Dual Sport	5	1984	621-920
XT350N/NC-A/AC Dual Sport	5	85-90	621-920
XT350B/BC-M/MC Dual Sport	5	91-00	621-922
FZR400U/SUC/W/SWC/A/SAC	8	88-90	621-922
XJ550H/J/K Maxim **(inner)** Mount 1	4	81-83	621-920
XJ550H/J/K Maxim **(outer)** Mount 2	8	81-83	621-923
XJ550RH/RJ/RK Seca **(inner)** 1	4	81-83	621-920
XJ550RH/RJ/RK Seca **(outer)** 2	8	81-83	621-923
XZ550RJ/RK Vision	8	82-83	621-920
FJ600L/LC/N/NC **(inner only)**	4	84-85	621-920
FZ600S/SC/T/TC/U/UC **(inner only)**	4	86-88	621-920
FZ600SS/SSC-W/WC (FZ6)	8	04-07	621-921
FZR600W/WC/AC	8	89-90	621-922
FZR600RA/RAC-RL/RLC	8	90-99	621-922
XJ600SD/SDC-SK/SKC Seca II	8	92-98	621-921

Yamaha Street

Model	Qt Req.	Year	Order No.
YX600S/SC-A/AC **(inner only)** 1	4	86-90	621-920
YZF600RG/RGC-RW/RWC	8	95-07	621-922
YZF-R6L/LC-T/TC	6	99-05	621-921
XJ650J/K Maxim **(inner)** Mount 1	4	82-83	621-920
XJ650J/K Maxim **(outer)** Mount 2	8	82-83	621-923
FZ700T/TC	8	1987	621-922
FZX700S/SC/T/TC Fazer	8	86-87	621-922
XJ700N/NC/S/SC **(inner)** Mount 1	4	85-86	621-920
XJ700N/NC/S/SC **(outer)** Mount 2	8	85-86	621-923
XJ700X Maxim X	8	85-86	621-922
FZ750N/NC/S/SC	8	85-86	621-922
FZ750U/UC	8	1988	621-922
FZR750RT/RU	8	87-88	621-922
XJ750J/K Maxim **(inner)** Mount 1	4	82-83	621-920
XJ750J/K Maxim **(outer)** Mount 2	8	82-83	621-923
XJ750MK Midnight **(inner)** 1	4	1983	621-920
XJ750MK Midnight **(outer)** 2	8	1983	621-923
XJ750RH/RJ/RK Seca **(inner)** 1	4	81-83	621-920
XJ750RH/RJ/RK Seca **(outer)** 2	8	81-83	621-923
YZF750RF/RFC	8	1994	621-922
YZF750RH/RHC-RK/RKC	8	96-98	621-922
TDM850D/DC/E/EC	4	92-93	621-922
XJ900RK Seca	8	1983	621-922
FZ1000N/NC-T/TC (FZ1)	8	01-05	621-921
FZR1000T/TC-G/GC	8	87-95	621-922
YZF1000RJ/RJC	8	1997	621-921
YZF-R1K/KC-S/SC	6	98-04	621-921
FJ1100L/LC/N/NC	8	84-85	621-922
FJ1200S/SC/T/TC	8	86-87	621-922
FJ1200W/WC-D/DC	8	89-92	621-922
VMX12N/NC/S/SC V-Max	16	85-86	621-922
VMX12U/UC-W1/W1C V-Max	16	88-07	621-922
XVZ12TK/L/KC2 Venture	16	83-84	621-922
XVZ12DL/DN Venture Royale	16	84-85	621-922
XVZ12DKC2	16	1984	621-922
FJR1300AS/ASC/AT/ATC (ABS)	8	04-05	621-921
FJR1300R/RC-T/TV	8	03-05	621-921
XVZ13T/TC/U/UC Venture	16	87-88	621-922
XVZ13DS-DEC Venture Royale	16	86-93	621-922

Yamaha ATV

YZF450BBV/BBW	2	06-07	621-921
YZF450LES	2	2004	621-921
YZF450S/T/V/W	2	04-07	621-921
YZF450SET/SPV/SEW	2	05-07	621-921

Yamaha Dual Sport & Offroad

TT-R250L/LC-V/VC	2	99-06	621-921
TT-R250L/LC-V/VC	1	99-06	621-922
WR250FN/FP/FR/FS/FT/FV	2	01-06	621-921
XT250L/LC Dual Sport	5	1984	621-920
YZ250FN/FP/FR/FS/FT/FV	2	01-06	621-921
TT350S/T	5	86-87	621-920
XT350N/NC-A/AC Dual Sport	5	85-90	621-920
XT350B/BC-M/MC Dual Sport	5	91-00	621-922
WR400FK/FL/FM	2	98-00	621-921
YZ400FK/FL	2	98-99	621-921
WR426FN/FP	2	01-02	621-921
YZ426FM/FN/FP	2	00-02	621-921
WR450FR/FS/FT/FV	2	03-06	621-921
YZ450FR/FS/FT/FV	2	03-06	621-921

Valve Cover Bolt Seals
Sudco Part Number to OEM Cross Reference

Honda

OEM Reference	Qt. Sold	Order No.
90541-371-000	pk/10	621-903
90541-422-000	pk/10	621-901
90541-425-000	pk/10	621-902
90542-MB0-000	pk/10	621-904
90543-MA6-000 (see 90543-MV9-670)	pk/10	621-900
90543-MV9-670	pk/10	621-900

Kawasaki

92055-1225	pk/4	620-985
92055-1225	pk/6	620-994
92055-1352	pk/10	621-960

Yamaha

2GH-1111G-00-00	pk/10	621-922
4G0-1111G-00-00	pk/10	621-920
4KG-1111G-00-00	pk/10	621-921
4U8-1112G-00-00	pk/10	621-923

Sealing Rubber
Honda applications. Sold pk/6. ***Made in Japan.***

Honda

OEM Reference 91318-300-013 **Order No.** 620-710

Model	Year
CB500K0/K1/K2	71-73
CB550F Super Sport	75-77
CB550K0/K1	74-75
CB550K	76-78
CB650	79-82
CB650C Custom	80-81
CB650SC Nighthawk 650	1982
CB750A Automatic	76-78
CB750F Super Sport	75-78
CB750K0/K1/K2/K3/K4/K5	69-75
CB750K	76-78

621-903

621-904

Timing Belt Cover Bolt Seals
Honda GL applications. Sold qt.10. ***Made in Japan.***

Honda

Model	Qt Req.	Year	Order No.
GL1000	4	75-79	621-903
GL1000L Goldwing LTD	4	1976	621-903
GL1100 Goldwing	4	80-83	621-903
GL1100A Goldwing Aspencade	4	82-83	621-903
GL1100I Goldwing Interstate	4	80-83	621-903
GL1200 Goldwing	4	1984	621-904
GL1200A Goldwing Aspencade	4	84-87	621-904
GL1200I Goldwing Interstate	4	84-87	621-904
GL1200L Goldwing LTD	4	1985	621-904
GL1200SEI Goldwing SEI	4	1986	621-904

Rubber O-Ring Camshaft Holder
Honda applications. Sold each. ***Made in Japan.***

Honda

OEM Reference 91311-425-000 **Order No.** 620-700

Model	Year
CB750C Custom	80-82
CB750F Super Sport	79-82
CB750K	79-82
CB750L LTD	1979
CB750SC Nighthawk	82-83
CB900C Custom	80-82
CB900F Super Sport	81-82
CB1000C Custom	1983
CB1100F Super Sport	1983

Cover Seals (Rubber Parts)

Valve Cover O-Ring Seal (Spark Plug Hole)

Replacement o-ring seal for spark plug hole. Sold in 2 piece set.
Made in Japan.

Suzuki Street

Model	Year	Cover 2	Cover 3
GSF600ST/SV/SW/SX/SY Bandit	96-00	620-996	620-980
GSF600SK1/SK2/SK3 Bandit	01-03	620-996	620-980
GSX600FJ-FY Katana	88-00	620-996	620-980
GSX600FK1-FK5 Katana	01-05	620-996	620-980
GSX750FK-FV Katana	89-00	620-996	620-980
GSX750FK1-FK5 Katana	01-05	620-996	620-980
GSX-R750RG	1986	620-996	620-980
GSX-R750G/H/J/K/L/M/N	86-92	620-996	620-980
GSX1100FJ/FK/FL/FM/FN/FP Katana	88-93	620-996	620-980
GSX1100GM/GN/GP Shaft	91-93	620-996	620-980
GSX-R1100G/H/J	86-88	620-996	620-980
GSX-R1100K/L/M/N	89-92	620-996	620-980
GSF1200SV/SW/SX/SY Bandit	97-00	620-996	620-980
GSF1200SK1-/SK5 Bandit	01-05	620-996	620-980
GSF1200SAV Bandit	1997	620-996	620-980

Valve Cover O-Ring Seal (Spark Plug Hole)

Replacement o-ring seal for spark plug hole. Sold in 4 piece set.
Made in Japan.

Suzuki Street

Model	Year	Order No.
GSX-R600WN/WP	92-93	620-997
RF600RR/RS/RT	94-96	620-997
GSX-R750WP/WR/WS	93-95	620-997
RF900RR/RS/RT/RV	94-97	620-997
SV1000K2-K7	03-07	620-997
SV1000SK2-SK7	03-07	620-997
TL1000RW/RX/RY/RK1/RK2/RK3	98-03	620-997
TL1000SV/SW/SX/SY/SK1	97-01	620-997
GSX-R1100WP/WR/WS/WT/WV/WW	93-98	620-997

Sudco Part Number to OEM Cross Reference

Valve Cover O-Ring Seal (Spark Plug Hole)

OEM Reference	Vesrah Ref.	Order No.
11178-27A01 No. 2 inner (Cover 2)	2 pc. set AK-3002	620-996
11179-27A02 No. 3 outer (Cover 3)	2 pc. set AK-3003	620-980
11173-17E00	4 pc. set AK-3006	620-997

Mikuni CV Side Carburetor N189.606

Sold each **Order No.** 007-799

Yamaha

Model	Year
TTR225	99-04
Wolverine 350 4x4	96-05
XT225 Serow	92-07

Cover Seals (Rubber Parts) & Tach Seal Kit

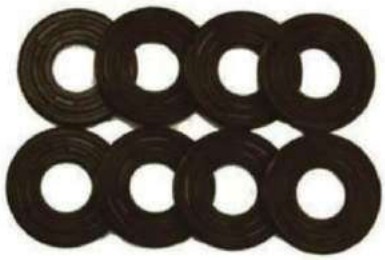

Cylinder Head Cover Bolt Seals

Replacement seals sold in 8 pc. set. ***Made in Japan.***

Kawasaki ATV, Dual Sport & Offroad

Model	OEM Ref. 92200-S015	Year	620-970
KLX400A1	KLX400SR Dual Sport	2003	use qt2
KLX400B1	KLX400R Offroad	2003	use qt2
KSF400A1/A2/A3	KFX400 ATV	03-05	use qt2
KSF400A6F	KFX400 ATV	2006	use qt2

Suzuki Street

Model	OEM Ref. 09161-11008/11006	Year	620-970
DR-Z400SY/SK1/SK2/SK3	Dual Sport	00-03	use qt2
DR-Z400SK4/SK5/SK6	Dual Sport	04-06	use qt2
DR-Z400SMK5/SMK6	Supermotard	05-06	use qt2
GSF400M/N/P	Bandit	91-93	use qt6
GSF600ST/SV/SW/SX/SY	Bandit	96-00	use qt8
GSF600SK1/SK2/SK3	Bandit	01-03	use qt8
GSX600FJ/FK/FL/FM/FN	Katana	88-92	use qt8
GSX600FP/FR/FS/FT/FV/FW/FX/FY	Katana	93-00	use qt8
GSX600FK1-FK6	Katana	01-06	use qt8
GSX-R600WN/WP		92-93	use qt8
GSX-R600V/W/X/Y/K1/K2/K3/K4/K5		97-05	use qt6
RF600RR/RS/RT		94-96	use qt8
DL650		04-06	use qt8
SV650X/Y/K1/K2/K3/K4/K5/K6		99-06	use qt4
SV650SX/SY/SK1/SK2/SK3/SK4/SK5/SK6		99-06	use qt4
GS700EF/ESF		1984	use qt8
GV700GLF/GLF2	Madura	1985	use qt12
GS750ED/ESD		1983	use qt8
GSX750FK/FL/FM/FN/FP	Katana	89-93	use qt8
GSX750FR/FS/FT/FV	Katana	94-97	use qt8
GSX750FW/FX/FY/FK1-FK6	Katana	98-06	use qt8
GSX-R750RG		1986	use qt8
GSX-R750G/H/J/K		86-89	use qt8
GSX-R750L/M/N		90-92	use qt6
GSX-R750WP/WR/WS		93-95	use qt6
GSX-R750T/V/W/X/Y/K1/K2/K3/K4/K5		96-05	use qt6
RF900RR/RS/RT/RV		94-97	use qt8
RF900RZS		1995	use qt8
DL1000K2/K3/K4/K5/K6	V-Storm	02-06	use qt8
GSX-R1000K1/K2/K3/K4/K5/K6		01-06	use qt6
TL1000RW/RX/RY/RK1/RK2/RK3		98-03	use qt8
TL1000SV/SW/SX/SY/SK1		98-01	use qt8
GSX1100FJ/FK/FL/FM/FN/FP	Katana	88-93	use qt8
GSX1100GM/GN/GP	Shaft	91-93	use qt8
GSX-R1100G/H/J		86-88	use qt8
GSX-R1100K/L/M/N		89-92	use qt8
GSX-R1100WP/WR/WS/WT/WV/WW		93-98	use qt8
GS1150ES3/ESE/EF/ESF/EF2/EG/ESG		83-86	use qt8
GSF1200SV/SAV/SW/SX/SY/SK1-SK5	Bandit	97-05	use qt8
GV1200GLF/GLF2/GLG	Madura	85-86	use qt12
GSX1300RX/RY/RK1-RK5	Hayabusa	99-05	use qt6
GV1400GDG/GDH/GDJ	Cavalcade	86-88	use qt12
GV1400GTG/GTH	Cavalcade	86-87	use qt12
GV1400GCG/GCH	Cavalcade	86-87	use qt12

Suzuki ATV, Dual Sport & Offroad

Model	OEM Ref. 09161-11008	Year	620-970
DR-Z400Y/K1/K2/K3/K4	Offroad	00-04	use qt2
DR-Z400SY/SK1/SK2/SK3/SK4	Dual Sport	00-04	use qt2
DR-Z400SK5/SK6	Dual Sport	05-06	use qt2
DR-Z400SMK5/SMK6	Supermotard	05-06	use qt2
DR-Z400EY/EK1/EK2/EK3/EK4	Offroad	00-04	use qt2
DR-Z400EK5/EK6	Offroad w/Electric Start	05-06	use qt2
LT-Z400K3-K7	Z400 Quadsport ATV	03-07	use qt2

Sudco Part Number to OEM Cross Reference

Cylinder Head Cover Bolt Seals

Kawasaki

OEM Reference	Vesrah Ref.	Order No.
92200-S015	4pc. set AH-3005	620-970

Suzuki

OEM Reference	Vesrah Ref.	Order No.
09161-11006	4pc. set AH-3005	620-970
09161-11008	4pc. set AH-3005	620-970

Z1 Tach Cable Guide Kit

Kit includes tach cable gear holder, o-ring and tach oil seal.
Made in Japan.

Order No. 900-173

Kawasaki

Model	Year
Z1/ A/ B-900	73-75
KZ900A4 up to engine 135980	76-77
KZ900B1 LTD up to engine 135980	1976

Z1 Tachometer Cable

Tachometer cable for the above Z1-900/KZ900 applications. Sold each.

Order No. 653-601

Vesrah Valve Stem Seals & Valve Keepers

Valve Stem Seals & Valve Keepers

Valve Stem Seals are sold pk/10. Valve Keepers sold each. ***Made in Japan.*** Valve Keeper quantity required for all engine valves is shown after Valve Keeper order number. **Sudco part number + (4) = Qt4, (8) = Qt8.**

Honda Street

Model	Year	Valve Stem Seal Pk/10	Valve Keeper Each
C70 Passport	80-83	620-001	—
C70K1 Honda 70	72-73	620-001	—
C70M Honda 70	70-71	620-001	—
CL70/K1/K2/K3 Scrambler	69-73	620-001	—
CL90 Scrambler 90	67-69	620-001	—
CB100K0/K1/K2 Super Sport	70-72	620-009	621-001 (4)
CL100K0/K1/K2 Scrambler	70-72	620-009	621-001 (4)
CL100S/S2/S3 Scrambler 100S	71-73	620-009	621-001 (4)
SL100K0/K1/K2/K3 Motosport	70-73	620-009	621-001 (4)
CB125S/S1/S2	73-75	620-009	621-001 (4)
CB125S	1976	620-009	621-001 (4)
CB125S	78-85	620-009	621-001 (4)
CB125TT	1990	620-006	621-001 (8)
CL125S/S1 Scrambler 125	73-74	620-009	621-001 (4)
NX125	88-89	620-006	621-003 (4)
SS125A Super Sport 125	67-69	620-001	—
CA175 (CD175) Touring 175	68-69	620-001	—
CA175K3 Touring 175	69-70	620-001	—
CB175K3-K7 Super Sport 175	69-73	620-001	—
CL175K0 Scrambler 175	68-69	620-001	—
CL175K3-K7 Scrambler 175	69-73	620-001	—
CM185T Twinstar	78-79	620-009	621-001 (8)
CM200T Twinstar	80-82	620-009	621-001 (8)
CB250 Nighthawk	91-97	620-006	621-001 (8)
CB250 Nighthawk	99-07	620-006	621-001 (8)
CM250C	82-83	620-006	621-001 (8)
CMX250C Rebel	85-87	620-006	621-001 (8)
CMX250C Rebel	96-97	620-006	—
CMX250C Rebel	99-12	620-006	—
CMX250CD Rebel	1986	620-006	621-001 (8)
CMX25C2 Rebel	99-00	620-006	—
VTR250 Interceptor	88-90	620-010	621-002 (16)
CB350F/F1 (4 cylinder)	72-74	620-009	621-001 (16)
CB400A Automatic	1978	620-006 In	621-001 (8) In
		620-012 Ex	—
CB400F Super Sport	75-77	620-009	621-001 (16)
CB400T Hawk	80-81	620-006 In	621-001 (8) In
		620-012 Ex	—
CB400T1/TII Hawk	78-79	620-006 In	621-001 (8) In
		620-012 Ex	—
CM400A Automatic	79-80	620-006 In	621-001 (8) In
		620-012 Ex	—
CM400C Custom	1981	620-006 In	621-001 (8) In
		620-012 Ex	—
CM400E	80-81	620-006 In	621-001 (8) In
		620-012 Ex	—
CM400T	79-81	620-006 In	621-001 (8) In
		620-012 Ex	—
CB450SC Nighthawk	82-86	620-006 In	621-001 (8) In
		620-012 Ex	—
CB450T Hawk	1982	620-006 In	621-001 (8) In
		620-012 Ex	—
CM450A Automatic	82-83	620-006 In	621-001 (8) In
		620-012 Ex	—

Honda Street

Model	Year	Valve Stem Seal Pk/10	Valve Keeper Each
CM450C Custom	1982	620-006 In	621-001 (8) In
		620-012 Ex	—
CM450E	82-83	620-006 In	621-001 (8) In
		620-012 Ex	—
CMX450C Rebel	86-87	620-006 In	621-001 (8) In
		620-012 Ex	—
CB500/KI/K2	71-73	620-009	621-001 (16)
CX500	78-79	620-002	—
CX500C Custom	79-82	620-002	—
CX500D Deluxe	79-81	620-002	—
CX500TC	1982	620-002	—
FT500 Ascot	82-83	620-005	—
GL500 Silverwing	81-82	620-002	—
GL500I Silverwing Interstate	81-82	620-002	—
VF500C V30 Magna	84-85	620-010	621-002 (32)
VF500F Interceptor	84-86	620-010	621-002 (32)
VT500C Shadow 500	83-86	620-006 In	621-003 (8) In
		620-012 Ex	—
VT500FT Ascot	83-84	620-006 In	621-003 (8) In
		620-012 Ex	—
CB550F Super Sport	75-77	620-009	621-001 (16)
CB550/K1/K	74-78	620-009	621-001 (16)
CBR600F Hurricane	87-90	620-010	621-002 (32)
CBR600F2 Hurricane	91-94	620-015	—
CBR600F3 Hurricane	95-98	620-015	—
CBR600SJR	1996	620-015	—
CBR600SE	1998	620-015	—
CBR600F4 Supersport	99-06	620-015	—
VT600C Shadow VLX	88-89	620-006 In	621-003 (8) In
		620-005 Ex	—
VT600C Shadow VLX	91-07	620-006 In	—
		620-012 Ex	—
VT600CD Shadow VLX Deluxe	93-07	620-006 In	—
		620-012 Ex	—
VT600CD2 Shadow VLX Deluxe	99-00	620-006 In	—
		620-012 Ex	—
NT650 Hawk GT	88-91	620-006 In	621-003 (8) In
		620-012 Ex	—
NX650	88-89	620-005	—
CB650	79-82	620-009	621-001 (16)
CB650C Custom	80-81	620-009	621-001 (16)
CB650SC Nighthawk	1982	620-009	621-001 (16)
CB650SC Nighthawk 650	83-85	620-010	621-002 (32)
CX650C Custom	1983	620-002	—
CX650T Turbo	1983	620-002	—
GL650 Silverwing	1983	620-002	—
GL650I Silverwing Interstate	1983	620-002	—
CB700SC Nighthawk	84-85	620-010	621-002 (32)
VF700C Magna	84-87	620-006	621-003 (32)
VF700F Interceptor	84-85	620-006	621-003 (32)
VF700S Sabre	84-85	620-006	621-003 (32)
VFR700F/F2 Interceptor	86-87	620-006	621-003 (32)
VT700C Shadow	84-87	620-005	—

Vesrah Valve Stem Seals & Valve Keepers

Honda Street

Model	Year	Valve Stem Seal Pk/10	Valve Keeper Each
CB750A Automatic	76-78	620-002	—
CB750C Custom	80-82	620-006	621-001 (32)
CB750F Super Sport	75-78	620-002	—
CB750F Super Sport	79-82	620-006	621-001 (32)
CB750K0/K1-K5 750 Four	69-75	620-002	—
CB750K 750 Four	1976	620-002	—
CB750K 750 Four K	77-78	620-002	—
CB750K 750 Four K	79-82	620-006	621-001 (32)
CB750L LTD	1979	620-006	621-001 (32)
CB750SC Nighthawk	82-83	620-006	621-001 (32)
VF750C V45 Magna	82-83	620-006	621-001 (32)
VF750C V45 Magna	1988	620-006	621-003 (32)
VF750C Magna	94-03	620-014 In	—
		—	—
VF750CD Magna	97-00	620-014 In	—
		—	—
VF750CD2 Magna Deluxe	95-96	620-014 In	—
		—	—
VF750F Interceptor	83-84	620-006	621-003 (32)
VF750S V45 Sabre	82-83	620-006	621-001 (32)
VFR750F Interceptor	1986	620-006	621-003 (32)
VFR750F	90-97	620-014	—
VFR750R RC30	1990	620-014	—
VT750C Shadow 750	1983	620-002	—
VT750C Shadow 750 A.C.E.	98-00	620-006 In	621-003 (8) In
		620-012 Ex	—
VT750C Shadow Aero	04-10	620-006 In	—
		620-012 Ex	—
VT750CA Shadow Aero	04-07	620-006 In	—
		620-012 Ex	—
VT750CD Shadow Deluxe	98-01	620-006 In	621-003 (8) In
		620-012 Ex	—
VT750CD2 Shadow Deluxe	98-01	620-006 In	621-003 (8) In
		620-012 Ex	—
VT750CDA Shadow A.C.E. 750 Deluxe	02-03	620-006 In	—
		620-012 Ex	—
VT750CDB Shadow A.C.E. 750 Deluxe	02-03	620-006 In	—
		620-012 Ex	—
VT750CDC Shadow A.C.E. 750 Deluxe	02-03	620-006 In	—
		620-012 Ex	—
VT750CDD Shadow A.C.E. 750 Deluxe	02-03	620-006 In	—
		620-012 Ex	—
VT750DC Shadow Spirit 750	01-02	620-006 In	621-003 (8) In
		620-012 Ex	—
VT750DCA Shadow Spirit 750	2003	620-006 In	—
		620-012 Ex	—
VT750DCA Shadow Spirit 750	05-07	620-006 In	—
		620-012 Ex	—
VT750DCB Shadow Spirit 750	2003	620-006 In	—
		620-012 Ex	—
VT750DCAB Shadow Spirit 750	05-07	620-006 In	—
		620-012 Ex	—
PC800 Pacific Coast	89-90	620-005 In	—
		620-012 Ex	—
PC800 Pacific Coast	94-98	620-005 In	—
		620-012 Ex	—
VFR800 Interceptor	02-11	620-014	—
VFR800A ABS	02-11	620-014	—
VFR800FI	98-01	620-014	—
VT800C Shadow	1988	620-005	—
CB900C Custom	80-82	620-006	621-001 (32)
CB900F Super Sport	81-82	620-006	621-001 (32)
CBR900RR	93-99	620-014	—
CBR929RR	00-01	620-014	—
CBR954RR	02-93	620-014	—

Honda Street

Model	Year	Valve Stem Seal Pk/10	Valve Keeper Each
CB1000	94-95	620-006	621-003 (32)
CB1000C Custom	1983	620-006	621-001 (32)
CBR1000F Hurricane	87-88	620-006	621-003 (32)
CBR1000F Hurricane	90-91	620-006	621-003 (32)
CBR1000F Hurricane	93-96	620-006	621-003 (32)
CBR1000RA	09-10	620-015	—
CBR1000RR	08-12	620-015	—
GL1000 Gold Wing	75-79	620-002	—
GL1000L LTD	1976	620-002	—
VF1000F Interceptor	1984	620-006	621-003 (32)
VF1000R	85-86	620-006	621-003 (32)
CBX six cyl. Super Sport	79-82	620-006	621-001 (48)
CB1100F Super Sport	1983	620-006	621-001(32)
CBR1100XX Blackbird	97-03	620-010	—
GL1100 Gold Wing	80-83	620-005	—
GL1100A Goldwing Aspencade	82-83	620-005	—
GL1100I Goldwing Interstate	80-83	620-005	—
ST1100	91-02	620-014	—
ST1100A (ABS)	92-02	620-014	—
VF1100C V65 Magna	83-86	620-006	621-003 (32)
VF1100S V65 Sabre	84-85	620-006	621-003 (32)
VT1100C Shadow 1100	85-90	620-005	—
VT1100C Shadow 1100	92-96	620-005	—
VT1100C Shadow 1100 Spirit	97-07	620-012	—
VT1100C2 Shadow 1100 A.C.E.	95-97	620-005	—
VT1100C Shadow 1100 A.C.E.	98-99	620-012	—
VT1100C2 Shadow 1100 A.C.E.	00-01	620-012	—
VT1100C2 Shadow Sabre	00-07	620-012	—
VT1100C2-2 Shadow 1100 A.C.E.	1997	620-005	—
VT1100C3 Shadow Aero	98-02	620-012	—
VT1100D2 Shadow 1100 A.C.E.	1999	620-012	—
VT1100T Shadow 1100 A.C.E. Tourer	98-99	620-012	—
GL1200 Gold Wing	1984	620-005	—
GL1200A Aspencade	84-87	620-005	—
GL1200I Interstate	84-87	620-005	—
GL1200L Limited	1985	620-005	—
GL1200SEi Aspencade	1986	620-005	—
ST1300	03-11	620-010	—
ST1300A	03-11	620-010	—
VTX1300C	04-10	620-006	—
VTX1300R	03-10	620-006	—
VTX1300S Retro	03-07	620-006	—
GL1500 Goldwing	88-90	620-006	—
GL1500A Goldwing Aspencade	91-00	620-006	—
GL1500C Valkyrie	97-00	620-006	—
GL1500C Valkyrie	2003	620-006	—
GL1500CDValkyrie	01-03	620-006	—
GL1500CF Valkyrie Interstate	99-01	620-006	—
GL1500CT Valkyrie Tourer	97-00	620-006	—
GL1500I Goldwing Interstate	91-96	620-006	—
GL1500SE Goldwing SE	90-00	620-006	—
GL1800 Goldwing	01-05	620-010	—
GL1800A Goldwing	01-05	620-010	—
NRX1800DA Valkyrie Rune	2004	620-010	—
NRX1800DB Valkyrie Rune	2004	620-010	—
NRX1800EA Valkyrie Rune	2004	620-010	—
NRX1800EB Valkyrie Rune	2004	620-010	—
VTX1800C	02-04	620-010	—
VTX1800C	02-08	620-012	—
VTX1800F	05-07	620-012	—
VTX1800N	04-11	620-012	—
VTX1800R	02-08	620-012	—
VTX1800S	02-07	620-012	—

Vesrah Valve Stem Seals & Valve Keepers

Honda ATV

Model	Year	Valve Stem Seal Pk/10	Valve Keeper Each
ATC70K0/K1	73-74	620-001	—
ATC70	78-85	620-001	—
TRX70	86-87	620-001	—
ATC90K0/K1/K2/K3	70-75	620-001	—
ATC90	76-78	620-001	—
TRX90 Fourtrax 90	93-01	620-010	—
TRX90 Sportrax 90	02-09	620-010	—
TRX90EX Sportrax90	07-08	620-010	—
TRX90X	09-12	620-010	—
ATC110	79-85	620-001	—
ATC125M	84-87	620-006	621-001 (4)
TRX125 Fourtrax 125	85-86	620-006	621-001 (4)
TRX125 Fourtrax 125	87-88	620-006	621-003 (4)
ATC185	1980	620-006	621-001 (4)
ATC185S	81-83	620-006	621-001 (4)
ATC200	81-83	620-006	621-001 (4)
ATC200E	82-83	620-006	621-001 (4)
ATC200ES	1984	620-006	621-001 (4)
ATC200M	84-85	620-006	621-001 (4)
ATC200S	84-86	620-006	621-001 (4)
ATC200X	83-85	620-006	621-001 (4)
ATC200X	86-87	620-006	621-003 (4)
TRX200 Fourtrax 200	1984	620-006	621-001 (4)
TRX200 Fourtrax 200	90-91	620-006	—
TRX200D Fourtrax 200 Type II	91-97	620-006	—
TRX200SX Fourtrax	86-87	620-006	621-003 (4)
ATC250ES Big Red	85-86	620-006	621-003 (4)
ATC250ES Big Red	1987	620-006	—
ATC250SX	85-86	620-006	621-003 (4)
ATC250SX	1987	620-006	—
TRX250 Fourtrax 250	85-86	620-006	621-003 (4)
TRX250 Fourtrax 250	1987	620-006	—
TRX250 Recon	97-01	620-006	—
TRX250X Fourtrax	87-88	620-006	—
TRX250X Fourtrax	91-92	620-006	—
TRX250X Fourtrax	09-11	620-006	
TRX300 Fourtrax 300	88-00	620-006	—
TRX300EX Fourtrax 300	93-00	620-006	—
TRX300EX Sportrax 300	01-05	620-006	—
TRX300FW Fourtrax 4x4	1988	620-006	—
TRX300FW Fourtrax 4x4	90-00	620-006	—
TRX300X Fourtrax	2009	620-006	—
ATC350X	85-87	620-006	621-003 (8)
TRX350 Fourtrax 4 x 4	86-87	620-006	621-003 (8)
TRX350D Fourtrax Foreman 4x4	87-89	620-006	—
TRX350FE Rancher 4x4 ES	00-06	620-006	—
TRX350FM Rancher 4x4	00-06	620-006	—
TRX350TE Rancher ES	00-06	620-006	—
TRX350TM Fourtrax Rancher	00-06	620-006	—
TRX400EX Fourtrax 400EX	99-00	620-006	—
TRX400EX Sportrax 400EX	01-08	620-006	—
TRX400FA Fourtrax Rancher AT	04-07	620-006	—
TRX400FGA Fourtrax Rancher AT	04-06	620-006	—
TRX400FM Fourtrax Foreman	2002	620-006	—
TRX400FW Fourtrax Foreman	95-01	620-006	—
TRX400FW Fourtrax Foreman	2003	620-006	—
TRX450ES Fourtrax Foreman	98-01	620-006	—
TRX450FE Fourtrax Foreman	02-04	620-006	—
TRX450FM Fourtrax Foreman	02-04	620-006	—
TRX450R	04-05	620-006	—
TRX450X	06-09	620-006	—
TRX450S Fourtrax Foreman S	98-01	620-006	—
TRX500FA Rubicon	00-12	620-006	—
TRX500FGA Fourman Rubicon	04-05	620-006	—
TRX650FA Rincon	2003	620-006	—
TRX650FA Fourtrax Rincon	03-05	620-006	—
TRX650FGA Fourtrax Rincon Gpscape	04-05	620-006	—

Honda Dual Sport & Offroad

Model	Year	Valve Stem Seal Pk/10	Valve Keeper Each
CRF50F	04-09	620-010	—
XR50R	00-03	620-010	—
Z50AK0/AK1-AK6 Mini Trail 50	68-75	620-001	—
Z50A Mini Trail 50	76-78	620-001	—
Z50R	79-87	620-001	—
Z50R	1988	620-010	—
Z50R	91-00	620-001	—
Z50RD Special	1986	620-001	—
CRF70F	04-09	620-010	—
CT70 Trail 70	76-82	620-001	—
CT70 Mini Trail	91-94	620-010	—
CT70H/HK1 Trail 70	70-73	620-001	—
CT70K0/K1/K2/K3/K4 Trail 70	69-74	620-001	—
SL70K0/K1 Motosport 70	71-73	620-001	—
XL70K0/K1	74-75	620-001	—
XL70	1976	620-001	—
XR70R	97-03	620-010	621-002 (4)
XL75	77-79	620-009	621-001 (4)
XR75K0/K1//K2	73-75	620-009	621-001 (4)
XR75	76-78	620-009	621-001 (4)
CRF80F	04-12	620-006	621-001 (4)
XL80S	80-85	620-009	621-001 (4)
XR80	79-84	620-009	621-001 (4)
XR80R	85-91	620-009	621-001 (4)
XR80R	93-03	620-006	621-001 (4)
CT90	76-79	620-001	—
CT90K0/K1-K6 Trail 90	66-75	620-001	—
SL90 Motosport 70	1969	620-001	—
ST90K0/K1/K2 Motosport 70	73-75	620-001	—
CRF100F	04-12	620-006	621-001 (4)
SL100K0/K1/K2/K3 Motosport 100	70-73	620-006	621-001 (4)
XL100K0/K1	74-75	620-006	621-001 (4)
XL100	76-78	620-006	621-001 (4)
XL100S	79-85	620-006	621-001 (4)
XR100	81-84	620-006	621-001 (4)
XR100R	85-03	620-006	621-001 (4)
CT110 Trail 110	80-84	620-006	621-001 (4)
CT110 Trail 110	1986	620-006	621-001 (4)
CT125 Trail 125	1977	—	621-001 (4)
NX125	88-89	620-006	621-003 (4)
SL125K1/K2 Motosport 125	71-73	620-006	621-001 (4)
TL125K0/K1/K2 Trials 125	73-75	620-006	621-001 (4)
TL125S Trials 125	1976	620-006	621-001 (4)
XL125K0/K1	74-75	—	621-001 (4)
XL125	76-78	—	621-001 (4)
XL125S	79-82	—	621-001 (4)
XL125S	84-85	620-006	621-001 (4)
CRF150F	03-09	620-006	—
XL185S	79-83	620-006	621-001 (4)
XR185	1979	620-006	621-001 (4)
TLR200 Reflex	86-87	620-006	621-001 (4)
TR200 Fatcat	86-87	620-006	621-003 (4)
XL200R	83-84	620-006	621-001 (4)
XR200	80-84	620-006	621-001 (4)
XR200R	81-83	620-006	621-001 (4)
XR200R	84-85	620-006	—
XR200R	86-88	620-006	621-001 (4)
XR200R	90-91	620-006	621-001 (4)
XR200R	93-03	620-006	621-001 (4)
CRF230F	03-09	620-006	—
CRF250R	04-09	620-010	—
CRF250X	04-12	620-010	—
TL250 Trials	75-76	620-009	621-001 (8)
XL250K0/K1/K2	72-75	620-009	621-001 (8)
XL250	1976	620-009	621-001 (8)
XL250R	82-83	620-006	621-001 (4)
XL250R	84-87	620-006	621-003 (8)

Vesrah Valve Stem Seals & Valve Keepers

Honda Dual Sport & Offroad

Model	Year	Valve Stem Seal Pk/10	Valve Keeper Each
XL250S	78-81	620-006	621-001 (8)
XR250L	91-96	620-006	621-003 (8)
XR250	79-80	620-006	621-001 (8)
XR250R	81-82	620-006	621-001 (8)
XR250R	84-95	620-006	621-003 (8)
XR250R	96-04	620-010	621-002 (8)
XL350	76-78	620-009	621-001 (4)
XL350K0/K1	74-75	620-009	621-001 (4)
XL350R	84-85	620-006	621-003 (8)
XR350R	83-85	620-006	621-003 (8)
XR400R	96-04	620-006	———
CRF450R	02-12	620-006	———
CRF450X	05-12	620-006	———
XL500R	1982	620-005	———
XL500S	79-81	620-005	———
XR500	79-80	620-005	———
XL600R	83-87	620-005	———
XL600V Transalp	89-90	620-006 In	621-003 (8) In
		620-012 Ex	———
XR600R	85-00	620-005	———
XR650L	93-12	620-005	———
XR650R	00-07	620-012	———

Kawasaki Street

*KZ400 (74-77) & *KZ550A/C applications, (1980-1981).Order valve keeper required. Difference is keeper groove on valves.

BN125A4/A5 Eliminator 125	01-02	620-606	———
BN125A7/A8 Eliminator 125	04-05	620-606	———
BN125A6F-A9F Eliminator 125	06-09	620-606	———
KZ200A1/A2	78-79	620-601	621-604 (4)
EL250B2/B3 Eliminator	88-89	620-604	621-605 (16)
EL250E1/E2/E3/E4 Eliminator	91-94	620-604	621-605 (16)
EX250E1/E2 Ninja 250R	86-87	620-604	621-605 (16)
EX250F2/F3/F4 Ninja 250R	88-90	620-604	621-605 (16)
EX250F6-F19 Ninja 250R	92-05	620-604	621-605 (16)
EX250F6F Ninja 250R	2006	620-604	621-605 (16)
EX250 J8F-JCF	08-12	620-606	———
KZ250D1/D2 LTD & CSR	80-81	620-601	621-604 (4)
KZ250L1 CSR	1982	620-601	621-604 (4)
KZ250W1 LTD	1983	620-601	621-604 (4)
EX305B1 GPz Belt	1983	620-603	621-603 (8)
KZ305A1/A2 CSR	81-82	620-603	621-603 (8)
KZ305B1 CSR Belt	1981	620-603	621-603 (8)
KZ305B2/B3 LTD	87-88	620-603	621-603 (8)
KZ400A1/A2 Deluxe	77-78	620-601	621-604 (8)
KZ400B1/B2	78-79	620-601	621-604 (8)
KZ400C1	1978	620-601	621-604 (8)
KZ400/D *(see notes) up to engine 089779	74-75	620-601	621-606 (8)
KZ400/D/D3/D4 *(see notes) from engine 089779	74-77	620-601	621-604 (8)
KZ400H1 LTD	1979	620-601	621-604 (8)
KZ400S/S2/S3 Special *(see notes) up to engine 089779	75-77	620-601	621-606 (8)
KZ400S/S2/S3 Special *(see notes) from engine 089779	75-77	620-601	621-604 (8)
KZ440A1/A2/A3/A4 LTD	80-83	620-601	621-604 (8)
KZ440B1/B2	80-81	620-601	621-604 (8)
KZ440D1/D2/D3/D4/D5 LTD	80-83	620-601	621-604 (8)
KZ440G1 Belt	1982	620-601	621-604 (8)
EN450A1-A6 LTD 454	85-90	620-603	621-603 (16)
EN500A1-A7 Vulcan 500	90-96	620-603	621-603 (16)
EN500C1-C10 Vulcan 500 LTD	96-05	620-603	621-603 (16)
EN500C6F Vulcan 500 LTD	2006	620-603	621-603 (16)
EX500A1-A7	87-93	620-603	621-603 (16)
EX500D1/D2/D3 Ninja 500	94-96	620-603	621-603 (16)
EX500D4-D12 Ninja 500R	97-05	620-603	621-603 (16)

Kawasaki Street

Model	Year	Valve Stem Seal Pk/10	Valve Keeper Each
EX500D6F-D9F Ninja 500R	06-09	620-603	621-603 (16)
KZ550A1/A2 *(see notes)	80-81	620-604	621-602 (16)
KZ550A1/A2 *(see notes)	80-81	620-604	621-603 (16)
KZ550A3/A4	82-83	620-604	621-603 (16)
KZ550C1/C2 LTD *(see notes)	80-81	620-604	621-602 (16)
KZ550C1/C2 LTD *(see notes)	80-81	620-604	621-603 (16)
KZ550C3/C4 LTD	82-83	620-604	621-603 (16)
KZ550D1 GPz	1981	620-604	621-603 (16)
KZ550F1 Spectre	1983	620-604	621-603 (16)
KZ550F2 LTD Shaft	1984	620-604	621-603 (16)
KZ550H1/H2 GPz	82-83	620-604	621-603 (16)
ZR550B1/B2/B3 Zephyr	90-92	620-604	621-603 (16)
ZX550A1/A2/A3 GPz	84-86	620-604	621-603 (16)
KL600A1 KLR600	1984	620-601	621-604 (8)
KL600B1/B2 KLR600	85-86	620-604	621-604 (8)
ZL600A1/A2 Eliminator	86-87	620-604	621-605 (32)
ZL600B2/B3 Eliminator	96-97	620-604	621-605 (32)
ZX600A1/A2/A3 Ninja 600R	85-87	620-604	621-605 (32)
ZX600B1 Ninja 600RX	1987	620-604	621-605 (32)
ZX600C1-C10 Ninja 600R	88-97	620-604	621-605 (32)
EJ650A1/A2/A3/A4 W650	99-02	620-606	———
KL650A1-A19 KLR650	87-05	620-601	621-604 (8)
KL650A6F-A7F KLR650	06-07	620-601	621-604 (8)
KL650B2/B3 KLR650 Tengai	90-91	620-601	621-604 (8)
KLX650C1/C2/C3/C4 Dual Sport	93-96	620-601	621-604 (8)
KZ650B1/B2/B2A/B3	77-79	620-601	621-604 (16)
KZ650C1/C2/C3 Custom	77-79	620-601	621-604 (16)
KZ650D1/D1A SR	1978	620-601	621-604 (16)
KZ650D2 SR	1979	620-601	621-604 (16)
KZ650E1 LTD	1980	620-601	621-604 (16)
KZ650F1	1980	620-601	621-604 (16)
KZ650H1/H2/H3 CSR	81-83	620-601	621-604 (16)
KZ700A1	1984	620-601	621-604 (16)
VN700A1 Vulcan	1985	620-603	621-603 (16)
ZN700A1/A2 LTD	84-85	620-601	621-604 (16)
KZ750B1/B2/B3/B4 2-cyl.	76-79	———	621-601 (8)
KZ750E1/E2/E3	80-82	620-601	621-604 (16)
KZ750F1 LTD Shaft	1983	620-601	621-604 (16)
KZ750G1 LTD 2-cyl.	1980	———	621-601 (8)
KZ750H1/H2/H3/H4 LTD	80-83	620-601	621-604 (16)
KZ750K1/K2 LTD 2-cyl.	83-84	———	621-601 (8)
KZ750L3	1983	620-601	621-604 (16)
KZ750M1 CSR 2-cyl.	1982	———	621-601 (8)
KZ750N1/N2 Spectre	82-83	620-601	621-604 (16)
KZ750R1 GPz	1982	620-601	621-604 (16)
VN750A2-A21 Vulcan 750	86-05	620-603	621-603 (16)
VN750A6F Vulcan 750	2006	620-603	621-603 (16)
ZR750C1/C2/C3 Zephyr	91-93	620-601	621-604 (16)
ZR750F2 ZR-7	2000	620-601	621-604 (16)
ZR750H1/H2/H3 ZR-7S	01-03	620-601	621-604 (16)
ZX750A1/A2/A3 GPz	83-85	620-601	621-604 (16)
ZX750E1/E2 GPz Turbo	84-85	620-601	621-604 (16)
ZX750F1/F2/F3/F4 Ninja 750R	87-90	620-604	621-605 (32)
ZX750H1/H2 Ninja ZX-7	89-90	620-604	621-605 (32)
ZX750J1/J2 Ninja ZX-7	91-92	620-606	———
ZX750K1/K2 Ninja ZX-7R	92-93	620-606	———
ZX750L1/L2/L3 Ninja ZX-7	93-95	620-606	———
ZX750M1/M2 Ninja ZX-7R	93-94	620-606	———
ZX750P1-P8 Ninja ZX-7R	96-03	620-606	———
VN800A1-A11 Vulcan 800	95-05	620-604	621-605 (16)
VN800B1-B10 Vulcan 800 Classic	96-05	620-604	621-605 (16)
VN800C1/C2 Vulcan 800 Drifter	99-00	620-604	621-605 (16)
VN800E1-E6F Vulcan 800 Drifter	01-06	620-604	621-605 (16)
KZ900A4/A5	76-77	620-601	621-606 (16)
KZ900B1 LTD	1976	620-601	621-606 (16)
KZ900C2 Police	1976	620-601	621-606 (16)

Vesrah Valve Stem Seals & Valve Keepers

Kawasaki Street

Model	Year	Valve Stem Seal Pk/10	Valve Keeper Each
Z1/A/B-900	73-75	620-601	621-606 (16)
ZL900A1/A2 Eliminator	85-86	620-603	621-603 (32)
ZX900A1/A2/A3 Ninja 900R	84-86	620-603	621-603 (32)
ZX900B1/B2/B3/B4 Ninja ZX-9R	94-97	620-606	———
ZX900C1/C2 Ninja ZX-9R	98-99	620-606	———
ZX900E1/E2 Ninja ZX-9R	00-01	620-606	———
KZ1000A1/A2	77-78	620-601	621-604 (16)
KZ1000A3/A3A/A4 MKII	79-80	620-601	621-604 (16)
KZ1000B1/B2/B3/B4 LTD	77-80	620-601	621-604 (16)
KZ1000C1/C1A/C2/C3/C4 Police	78-81	620-601	621-604 (16)
KZ1000D1 Z1R	1978	620-601	621-604 (16)
KZ1000D3 Z1R	1980	620-601	621-604 (16)
KZ1000E1/E2 Shaft ST	79-80	620-601	621-604 (16)
KZ1000J1/J2/J3	81-83	620-601	621-604 (16)
KZ1000K1/K2 LTD	81-82	620-601	621-604 (16)
KZ1000M1/M2 CSR	81-82	620-601	621-604 (16)
KZ1000P1-P21 Police	82-02	620-601	621-604 (16)
KZ1000P24 Police	2005	620-601	621-604 (16)
KZ1000R1/R2 Replica	82-83	620-601	621-604 (16)
ZG1000A1-A20 Concours	86-05	620-603	621-603 (32)
ZG1000A6F Concours	2006	620-603	621-603 (32)
ZL1000A1 Eliminator	1987	620-603	621-603 (32)
ZR1000A1/A2/A3 Z1000	03-05	620-606	———
ZX1000A1/A2 Ninja 1000R	86-87	620-603	621-603 (32)
ZX1000B1/B2/B3 Ninja ZX-10	88-90	620-604	621-605 (32)
ZX1000C1-JCF Ninja ZX-10R	04-12	620-606	———
KZ1100A1/A2/A3 Shaft	81-83	620-601	621-604 (16)
KZ1100B1/B2 GPz	81-82	620-601	621-604 (16)
KZ1100D1/D2 Spectre	82-83	620-601	621-604 (16)
KZ1100L1 LTD	1983	620-601	621-604 (16)
ZN1100B1/B2 LTD Shaft	84-85	620-601	621-604 (16)
ZR1100A1/A2/A3/A4	92-95	620-601	621-604 (16)
ZR1100C3/C4 ZRX1100	99-00	620-604	621-605 (32)
ZX1100A1/A2 GPz	83-84	620-601	621-604 (16)
ZX1100C1/C2/C3/C4 Ninja ZX-11	90-93	620-604	621-605 (32)
ZX1100D1-D9 Ninja ZX-11	93-01	620-604	621-605 (32)
ZX1100E1/E2/E3 GPz	95-97	620-604	621-605 (32)
ZX1100F1 GPz (ABS)	1996	620-604	621-605 (32)
ZG1200A1 Voyager XII	1986	620-603	621-603 (32)
ZG1200B1-B17 Voyager XII	87-03	620-603	621-603 (32)
ZR1200A1-A5 ZRX1200	01-05	620-604	621-605 (32)
ZX1200C1/C2/C3/C4 ZZR1200	02-05	620-604	621-605 (32)
KZ1300A1/A2/A3/A4	79-82	620-601	621-604 (24)
KZ1300B2 Touring	1980	620-601	621-604 (24)
ZN1300A1-A6 Voyager	83-86	620-601	621-604 (24)
VN1500A1-A9 Vulcan 88	87-95	620-601	621-604 (16)
VN1500A10-A13 Vulcan 1500	96-99	620-601	621-604 (16)
VN1500B1-B4 Vulcan 88 SE	87-90	620-601	621-604 (16)
VN1500C3/C4 Vulcan 1500L	96-97	620-601	621-604 (16)
VN1500D1/D2 Vulcan Classic	96-97	620-601	621-604 (16)
VN1500E1-E7 Vulcan 1500 Classic	98-04	620-601	621-604 (16)
VN1500G1/G1A/G2A/G3	99-01	620-601	621-604 (16)
Vulcan 1500 Nomad F.I.			
VN1500J1/J2 Vulcan 1500 Drifter	99-00	620-601	621-604 (16)
VN1500L1-L5 Vulcan 1500	00-04	620-601	621-604 (16)
Nomad F.I.			
VN1500N1-N3 Vulcan 1500 Classic	00-02	620-601	621-604 (16)
Classic F.I.			
VN1500N4 Vulcan 1500 Classic F.I.	2005	620-601	621-604 (16)
VN1500N6F Vulcan 1500 Classic	06-08	620-601	621-604 (16)
VN1500P1/P2 Vulcan 1500	02-03	620-601	621-604 (16)
Mean Streak			
VN1500R1-R5 Vulcan 1500 Drifter	01-05	620-601	621-604 (16)
VN1600A1/A2/A3 Vulcan 1600	03-05	620-601	621-604 (16)
Classic			
VN1600A6F Vulcan 1600 Classic	06-08	620-601	621-604 (16)

Kawasaki Street

Model	Year	Valve Stem Seal Pk/10	Valve Keeper Each
VN1600B1-B8F Vulcan 1600	04-07	620-601	621-604 (16)
Mean Streak			
VN1600D1-D7F Vulcan 1600 Nomad	2005	620-601	621-604 (16)
VN1600D6F Vulcan 1600 Nomad	2006	620-601	621-604 (16)
VN1600E6F Vulcan 1600 Classic	2006	620-601	621-604 (16)
VN1600F6F-F7F Vulcan 1600	06-07	620-601	621-604 (16)
Mean Streak			

Kawasaki ATV

KLF110A1/A2 Mojave	87-88	620-603	621-602 (4)
KLF110B1/B2 Mojave	87-88	620-603	621-602 (4)
KLT110A1/A2/A3	84-86	620-603	621-602 (4)
KLT160A1	1985	620-603	621-602 (4)
KLF185A1/A2/A3/A4 Bayou	85-88	620-603	621-602 (4)
KLT185A1/A2 Bayou	85-86	620-603	621-602 (4)
KLT200A1/A2/A3/A4/A4A	81-83	620-601	621-604 (4)
KLT200B1	1983	620-601	621-604 (4)
KLT200C1/C2	83-84	620-601	621-604 (4)
KLF220A1-A15 Bayou 220	88-02	620-603	621-601 (4)
KLF250A1/A2/A3 Bayou 250	03-11	620-603	621-601 (4)
KLF250A6F-ABF Bayou 250	06-11	620-603	621-601 (4)
KLT250A1/A2	82-83	620-601	621-604 (4)
KLT250C1/C2/C3 Prairie	83-85	620-601	621-604 (4)
KLT250P1 Police	1984	620-601	621-604 (4)
KSF250A1-A17 Mojave 250	87-03	620-603	621-602 (8)
KSF250A18 KFX250 Mojave	2004	620-603	621-602 (8)
KEF300A1-A6 Lakota 300	95-00	620-601	621-604 (4)
KEF300B1/B2/B3 Lakota Sport	01-03	620-601	621-604 (4)
KLF300A1/A2 Bayou	86-87	620-601	621-604 (4)
KLF300B1-B17 Bayou 300	88-04	620-601	621-604 (4)
KLF300C1-C16 Bayou 300 4x4	89-04	620-601	621-604 (4)
KVF300A1-A Prairie 3004 x4	99-02	620-601	621-604 (4)
KVF300B1-B Prairie 300	99-02	620-601	621-604 (4)
KVF360A1/A2/A3 Prairie 360 4x4	03-05	620-601	621-604 (4)
KVF360A6F-ACF Prairie 360 4x4	06-12	620-601	621-604 (4)
KVF360B1-B9F Prairie 360	03-09	620-601	621-604 (4)
KVF360C1 Prairie 360 Advantage	2003	620-601	621-604 (4)
KLF400B1-B7 Bayou 400 4x4	93-99	620-603	621-603 (8)
KSF400A1/A2/A/A6F KFX400	03-06	620-404	———
KVF400A1/A2 Prairie 400 4x4	97-98	620-603	621-603 (8)
KVF400B1 Prairie 400	1998	620-603	621-603 (8)
KVF400C1/C2/C3/C4 400 4x4	99-02	620-603	621-603 (8)
KVF400D1-D5 Prairie 400	98-02	620-603	621-603 (8)
KVF650A1/A2 Prairie 650 4x4	02-03	620-604	621-605 (16)
KVF650B1/B2 Prairie 650 4x4	02-03	620-604	621-605 (16)
Advantage Classic			
KVF650D1Brute Force 650 4x4	2005	620-604	621-605 (16)
KVF650D6F-DCF Brute Force 650 4x4	06-12	620-604	621-605 (16)
KVF650E1 Brute Force 650 4x4	2005	620-604	621-605 (16)
Realtree Hardwoods Green HD			
KVF650E6F-E9F Brute Force 650 4x4	06-09	620-604	621-605 (16)
Realtree Hardwoods Green HD			
KVF650F6F-FCF Brute Force 650 4x4I	06-09	620-604	621-605 (16)
KSV700A1/A2/A6F KFX700 V-Force	04-06	620-604	621-605 (16)
KSV700B1/B2/B6F KFX700 V-Force	04-06	620-604	621-605 (16)
KSV700C6F	2006	620-604	621-605 (16)
KVF700A1/A2/A6F Prairie 700 4x4	04-06	620-604	621-605 (16)
KVF700B1/B2 Prairie 700 4x4	04-05	620-604	621-605 (16)
Hardwoods Green HD			
KVF700D1/D6F Prairie 700 4x4	05-06	620-604	621-605 (16)
Team Green Special Edition			
KVF750A1 Brute Force 750 4x4i	2005	620-604	621-605 (16)
KVF750A6F-A7F Brute Force 750 4x4i	06-07	620-604	621-605 (16)
KVF750B1 Brute Force 750 4x4i	2005	620-604	621-605 (16)
KVF750B6F-B7F Brute Force 750 4x4i	06-07	620-604	621-605 (16)
KVF750C6F-C9F Brute Force 750 4x4i	06-07	620-604	621-605 (16)

Vesrah Valve Stem Seals & Valve Keepers

Kawasaki Dual Sport & Offroad

Model	Year	Valve Stem Seal Pk/10	Valve Keeper Each
KLX110A1/A2/A3/A4	02-05	620-606	———
KLX110A6F-A9F	06-09	620-606	———
KLX110 CAF-CCF	10-12	620-606	———
KLX125A1/A2/A3	03-05	620-401	———
KLX125A6F	2006	620-401	———
KLX125B1/B2/B3	03-05	620-401	———
KLX125B6F	2006	620-401	———
KL250A1/A1A/A2 /A3/A4	78-81	620-601	621-604 (4)
KL250C1/C2	83-84	620-601	621-604 (4)
KL250D2-D22 KLR250 Dual Sport	85-05	620-603	621-603 (8)
KL250G4/G5/G6/G7 Super Sherpa	00-03	620-606	———
KLX250A1/A2	79-80	620-601	621-604 (4)
KLX250D2/D3/D4 KLX250R	94-96	620-606	———
KLX250H6F-H7F KLX250S Dual Sport	06-07	620-606	———
KLX250 T9F-TCF	09-12	620-606	———
KX250N1/N2 KX250F	04-05	620-606	———
KX250T6F-YCF	06-12	620-606	———
KLX300A2-A7F KLX300R	97-07	620-606	———
KLX300A6F-A7F KLX300R	06-07	620-606	———
KLX400A1 KLX400SR Dual Sport	2003	620-404	———
KLX400B1 KLX400R	2003	620-404	———
KX450D6F-EBF	06-11	620-603	621-603 (8)
KL600A1 KLR600	1984	620-601	621-604 (8)
KL600B1/B2 KLR600	85-86	620-601	621-604 (8)
KL650A1-A19 KLR650	87-05	620-601	621-604 (8)
KL650A6F-ECF KLR650	06-12	620-601	621-604 (8)
KL650B1/B2 Tengai KLR650	90-91	620-601	621-604 (8)
KLX650A1/A2/A3 KLX650R	93-95	620-601	621-604 (8)
KLX650C1/C2/C3/C4	93-96	620-601	621-604 (8)
KLX650D1 KLX650R	1996	620-601	621-604 (8

Suzuki Street

Model	Year	Valve Stem Seal Pk/10	Valve Keeper Each
SP100D Dual Sport	1983	620-401	———
DR125SER/SES/SET Dual Sport	94-96	620-401	———
GN125Z/D	82-83	620-401	———
GN125EM/EN/EP/ER/ES/ET/EV	91-97	620-401	———
SP125Z/D Dual Sport	82-83	620-401	———
DR200SET-K9 Dual Sport	96-09	620-401	———
SP200G/H/J Dual Sport	86-88	620-401	———
DR250SL-SER Dual Sport	90-95	620-404	621-405 (8)
GN250Z/D	82-83	620-401	———
GN250F	1985	620-401	———
GN250J	1988	620-401	———
GS250TT/TX	80-81	620-401	———
GZ250Y/K1-L0 Marauder	99-10	620-401	———
SP250Z/D Dual Sport	82-83	620-401	———
SP250F Dual Sport	1985	620-401	———
GS300LZ/LD	82-83	620-401	———
GS300LF	1985	620-401	———
DR350SL-SEX Dual Sport	90-99	620-404	621-405 (8)
GN400T/TX/TZ	80-82	620-402	621-401 (4)
GN400XT/XX	80-81	620-402	621-401 (4)
GS400B/XB/X/XC	77-78	620-402	621-401 (8)
DR-Z400SY-SK6 Dual Sport	00-06	620-404	———
DR-Z400SM Supermotard	05-06	620-404	———
SP400T Dual Sport	1980	620-402	621-401 (4)
GS425N/EN/LN	1979	620-402	621-401 (8)
GS450ET/EX/EZ/ED	80-83	620-402	621-401 (8)
GS450GAZ/GAD Automatic	82-83	620-402	621-401 (8)
GS450GAF Automatic	1985	620-402 In	621-401 (4)
		———	621-401 (4)
GS450LT/LXLZ/LD	80-83	620-402	621-401 (8)
GS450LF/LG/LH/LG	85-88	620-402 In	621-401 (4)
		———	621-401 (4)
GS450ST/SX	80-81	620-402	621-401 (8)
GS450TX/TXZ/TXD	81-83	620-402	621-401 (8)
GS500EK-EY	89-00	620-402	621-401 (8)
GS500EK1/EK2	01-02	620-402	621-401 (8)

Suzuki Street

Model	Year	Valve Stem Seal Pk/10	Valve Keeper Each
GS500FK4-L0	04-10	620-402	621-401 (8)
SP500X/Z/D	81-83	620-402	621-401 (4)
GS550B/C/EC/N/EN/ET	77-80	620-402	621-401 (16)
GS550ED/ESD	1983	620-403	621-405 (32)
GS550ES3/ESE/EF/ESF/ESG	83-86	620-403	621-405 (32)
GS550LN/LT/LX/LZ	79-82	620-402	621-401 (16)
GS550LD	1983	620-403	621-405 (32)
GS550LF/LG	85-86	620-403	621-405 (32)
GS550MZ Katana	1982	620-402	621-401 (16)
GS550TX	1981	620-402	621-401 (16)
GSF600ST/SV/SW/SX/SY Bandit	96-00	620-404	621-405 (32)
GSF600SK1/SK2/SK3 Bandit	01-03	620-404	621-405 (32)
GSX600FJ-FY Katana	88-00	620-404	621-405 (32)
GSX600FK1-L2 Katana	01-12	620-404	621-405 (32)
GSX-R600WN/WP	92-93	620-406	———
GSX-R600V/W/X/Y	97-00	620-406	———
GSX-R600K1-L2	01-12	620-406	———
RF600RR/RS/RT	94-96	620-406	———
SP600F Dual Sport	1985	620-402	621-401 (8)
DL650K4-L1 V-Storm	04-11	620-406	———
GR650D/XD Tempter	1983	620-402	———
DR650SL/SM/SN/SP/SER/SES	90-95	620-402	621-401 (8)
DR650SET-L1 Dual Sport	96-11	620-401	———
GS650EX/EZ	81-82	620-402	621-401 (16)
GS650GX/GZ/GD	81-83	620-402	621-401 (16)
GS650GLX/GLZ/GLD	81-83	620-402	621-401 (16)
GS650MD Katana	1983	620-402	621-401 (16)
LS650FFG/FFH Savage	86-87	620-402	———
LS650FPG/FPH/FPJ Savage	86-88	620-402	———
LS650PS/PT/PV/PW/PX/PY Savage	95-00	620-402	———
LS650PK1/PK2/PK3/PK4 Savage	01-04	620-402	———
LS650 K5-L1 Boulevard S40	05-11	620-402	———
SV650X-L0	99-10	620-406	———
SV650SX-L0	99-10	620-406	———
SV650SAK7-L0	07-10	620-406	———
XN85D Turbo	1983	620-402	621-401 (16)
GS700EF/EFS	1985	620-401	———
GV700GLF/GLF2 Madura	1985	620-401	———
VS700GLFG/GLFH Intruder	86-87	620-401	———
VS700GLPG/GLPH Intruder	86-87	620-401	———
VS700GLEFG/GLEFH Intruder	86-87	620-401	———
VS700GLEPG/GLEPH Intruder	86-87	620-401	———
GS750B/C/N/EC/EN	77-79	620-402	621-401 (16)
GS750ET/EX/EZ	80-82	620-401	———
GS750ED/ESD	1983	620-401	———
GS750LN	1979	620-402	621-401 (16)
GS750LT/LX	80-81	620-401	———
GS750SD Katana	1983	620-401	———
GS750TZ/TD	82-83	620-401	———
GSX750FK-FK6 Katana	89-06	620-404	621-405 (32)
GSX-R750G/H	86-87	620-404	621-405 (32)
GSX-R750RG	1986	620-404	621-405 (32)
GSX-R750J/K/L/N/M	88-92	620-404	621-405 (32)
GSX-R750WP/WR/WS	93-95	620-406	———
GSX-R750T/V/W/X/Y	96-99	620-406	———
GSX-R750 K4-L1	04-12	620-406	———
VS750GLPJ-GLPM Intruder	88-91	620-401	———
VL800K1/K2/K3/K4 Volusia	01-04	620-401	———
VL800 K5-L1 Boulevard C50	05-11	620-401	———
VL800 K5-L1 Boulevard C50T	05-11	620-401	———
VL800Z Boulevard C50 Limited	05-06	620-401	———
VS800GLN-GLK4 Intruder	92-04	620-401	———
VS800 K5-K9 Boulevard S50	05-09	620-401	———
VX800L/M/N/P	90-93	620-401	———
VZ800V-K4 Marauder	97-04	620-401	———
GS850GN/GT/GX/GZ/GD	79-83	620-402	621-401 (16)
GS850GLT/GLX/GLZGLD	80-83	620-402	621-401 (16)

Vesrah Valve Stem Seals & Valve Keepers

Suzuki Street

Model	Year	Valve Stem Seal Pk/10	Valve Keeper Each
RF900RR/RS/RT/RV	94-97	620-406	—
RF900RZS	1995	620-406	—
DL1000K2-K9 V-Storm	02-09	620-401	—
GS1000C/EC/N	78-79	620-402	621-401 (16)
GS1000EN/ET	79-80	620-402	621-401 (16)
GS1000GT/GLT/GX/GLX	80-81	620-402	621-401 (16)
GS1000LN	1979	620-402	621-401 (16)
GS1000SN	1979	620-402	621-401 (16)
GS1000SZ Katana	1982	620-401	—
GSX-R1000K5-K6	05-06	620-406	—
SV1000K3-K7	03-07	620-401	—
SV1000SK3-K7	03-07	620-401	—
TL1000SV/SW/SX/SY/SK1	97-01	620-401	—
TL1000RW/RXRY/RK1/RK2/RK3	98-03	620-401	—
GS1100ET/EX/EZ	80-82	620-401	—
GS1100ED/ESD	1983	620-401	—
GS1100GZ/GLZ/GD/GLD	82-83	620-402	621-401 (16)
GS1100GKZ~GKE	82-84	620-402	621-401 (16)
GS1100LT	1980	620-401	—
GS1100SD Katana	1983	620-401	—
GSX-R1100G/H/J/K/L/M/N	86-92	620-404	621-405 (32)
GSX-R1100WP-WW	93-98	620-406	—
GSX1100FJ-FP Katana	88-93	620-404	621-405 (32)
GSX1100GM/GN/GP Shaft	91-93	620-404	621-405 (32)
GS1150ES3/ESE/ESF	83-85	620-401	—
GS1150EF/EF2/EG/ESG	85-86	620-401	—
GSF1200SV/SAV/SW/SX/SY Bandit	97-00	620-404	621-405 (32)
GSF1200SK1-K2 Bandit	01-02	620-404	621-405 (32)
GV1200GLF/GLF2/GLG Madura	85-86	620-401	—
GSX1300RX-L1 Hayabusa	99-11	620-404	—
GV1400GCG/GCH Cavalcade	86-87	620-403	621-405 (32)
GV1400GDG/GDH/GDJ Cavalcade	86-88	620-403	621-405 (32)
GV1400GTG/GTH Cavalcade	86-87	620-403	621-405 (32)
VS1400GLFH-GLFN Intruder	87-92	620-401 In	—
		620-402 Ex	—
VS1400GLPH-GLPK4 Intruder	87-04	620-401 In	—
		620-402 Ex	—
VS1400 K5-K8 Boulevard S83	05-08	620-401 In	—
		620-402 Ex	—
VL1500W/X/Y Intruder 1500 LC	98-00	620-401 In	—
		620-402 Ex	—
VL1500K1/K2/K3/K4 Marauder	01-04	620-401 In	—
		620-402 Ex	—
VL1500 Boulevard C90	05-10	620-401 In	—
		620-402 Ex	—
VL1500 Boulevard C90T	05-09	620-401 In	—
		620-402 Ex	—
VZ1600K4 Marauder	2004	620-601	621-604 (16)
VZ1600 Boulverad M95	05-06	620-601	621-604 (16)

Suzuki ATV

Model	Year	Valve Stem Seal Pk/10	Valve Keeper Each
ALT125D/E/F/G	83-86	620-401	—
LT125D/E/F/G/H Quadrunner	83-87	620-401	—
LT160K3/K4 Quadrunner	03-04	620-401	—
LT160EK/EL/EM/EN	89-92	620-401	—
LT-F160M/N/P/R/S	91-95	620-401	—
LT-F160T/V/W/X/Y/K1	96-01	620-401	—
LT-F160K3	2003	620-401	—
ALT185E/F	84-85	620-401	—
LT185E/F/G/H	84-87	620-401	—
LT230EH/EJ/EK/EL Quadrunner	87-90	620-401	—
LT230EM/EN/EP Quadrunner	91-93	620-401	—
LT230GEF/GEG Quadrunner	85-86	620-401	—
LT230SF/SG/SH/SJ Quadsport	85-88	620-401	—
LT-F230G/H	86-87	620-401	—
DR-Z250K1-K7	01-07	620-406	—
LT250EFF/EFG Quadrunner	85-86	620-401	—
LT250SK/SL	89-90	620-401	—
RM-Z250K7-L2	07-12	620-406	—

Suzuki ATV

Model	Year	Valve Stem Seal Pk/10	Valve Keeper Each
LT-4WDP/WDR/WDS Quad 4x4	93-95	620-401	—
LT-4WDT/WDV/WDW Quad 4x4	96-98	620-401	—
LT-F250J/K/L/M/N/P	88-93	620-401	—
LT-F250R/S/T/V/W/X/Y/K1	94-01	620-401	—
LT-F250K2-L2 Ozark	02-12	620-401	—
LT-F250FX/FY/FK1/FK2	99-02	620-401	—
LT-Z250K4-K9 Quadsport	04-09	620-401	—
LT-F250F X-L1 Quadrunner	99-02	620-401	—
LT300EH/EJ/EK Quadrunner	87-89	620-401	—
LT-F300FX/FY/K1/K2 King Quad	99-02	620-401	—
LT-F4WDXM/N/P/R King Quad	91-94	620-401	—
LT-F4WDXS/T/V/W King Quad	95-98	620-401	—
LT-400K2/K3 Eiger 2WD	02-03	620-404	621-405 (8)
LT-A400FK2/FK3 Eiger Auto 4WD	02-03	620-404	621-405 (8)
LT-A400FK4/FK7 Eiger Auto 4WD	04-07	620-404	621-405 (8)
LT-A400FCK3 Eiger Auto 4WD	2003	620-404	621-405 (8)
LT-A400FCK4 Eiger Auto 4WD	2004	620-404	621-405 (8)
LT-A400K2/K3/K4 Eiger Auto 2WD	02-04	620-404	621-405 (8)
LT-F400FK2-FK7 Eiger 4WD	02-07	620-404	621-405 (8)
LT-F400K2-K8 Eiger 2WD	02-08	620-404	621-405 (8)
LT-Z400K3-L2 Z400 Quadsport	03-12	620-404	—
LT-A500FY/FK1 Quadmaster	00-01	620-404	621-405 (8)
LT-A500FK2/FK3 Vinson 4WD	02-03	620-404	621-405 (8)
LT-A500FK4/FCK4 Vinson 4WD	2004	620-404	621-405 (8)
LT-A500FK5-K7 Vinson 4WD	05-07	620-404	621-405 (8)
LT-F500FK3-FK7 Vinson Manual 4WD	03-07	620-404	621-405 (8)
LT-F500FW-L1 Quadrunner	98-11	620-404	621-405 (8)
LT-A700XK5 King Quad	2005	620-401	—
LT-V700FK4/FK5 Twin Peaks	04-05	620-604	621-605 (16)

Suzuki Dual Sport & Offroad

Model	Year	Valve Stem Seal Pk/10	Valve Keeper Each
DR100D/E/F/G/H/J/K/L	83-90	620-401	—
SP100D Dual Sport	1983	620-401	—
DR125Z/D/E	82-84	620-401	—
DR125G/H/J	86-88	620-401	—
DR125SER/SES/SET Dual Sport	94-96	620-401	—
DR-Z125K3-K9	03-09	620-401	—
DR-Z125LK3-K9	03-05	620-401	—
SP125Z/D Dual Sport	82-83	620-401	—
SP125G/H/J Dual Sport	86-88	620-401	—
DR200SET-K9 Dual Sport	96-09	620-401	—
SP200G/H/J Dual Sport	86-88	620-401	—
DR250Z/D	82-83	620-401	—
DR250F	1985	620-401	—
DR250SL-SES Dual Sport	90-95	620-404	621-405 (8)
DR250L/M/N/P	90-93	620-404	621-405 (8)
RM-Z250K4-L2	04-12	620-606	—
SP250Z/D Dual Sport	82-83	620-401	—
SP250F Dual Sport	1985	620-401	—
DR350L/M/N/P/R/S/T/V/W/X	90-99	620-404	621-405 (8)
DR350SL-SEX Dual Sport	90-99	620-404	621-405 (8)
DR370C/N	78-79	620-402	621-401 (4)
SP370C/N Dual Sport	78-79	620-402	621-401 (4)
DR400T	1980	620-402	621-401 (4)
DR-Z400Y/K1/K2/K3/K4	00-04	620-404	—
DR-Z400EY-K7	00-07	620-404	—
DR-Z400SY-K2 Dual Sport	00-12	620-404	—
DR-Z400SM Supermoto	2005	620-404	—
SP400T Dual Sport	1980	620-402	621-401 (4)
RM-Z450K5-K7	05-07	620-404	—
RM-Z450Z L0-L1	10-12	620-401	—
DR500X/Z/D	81-83	620-402	621-401 (8)
SP500X/Z/D Dual Sport	81-83	620-402	621-401 (8)
SP600F Dual Sport	1985	620-402	621-401 (8
DR650SL/SM/SN/SP/SER/SES	90-95	620-402	621-401 (8)
DR650SET-L1 Dual Sport	96-11	620-401	—

Vesrah Valve Stem Seals & Valve Keepers

Yamaha Street

Model	Year	Valve Stem Seal Pk/10	Valve Keeper Each
XT125J/K/KC Dual Sport	82-83	620-203	621-201 (4)
SR185H/J Exciter	81-82	620-203	621-201 (4)
TW200T/TC-B1 Trailway	87-12	620-203	621-201 (4)
XT200J/K/KC Dual Sport	82-83	620-203	621-201 (4)
XT225D/DC-B1 Serrow	92-12	620-203	621-201 (4)
SR250G/H/J Exciter	80-82	620-201	—
SR250TH Exciter	1981	620-201	—
SRX250T/TC	1987	620-204	—
XT250G/H/J/K/KC Dual	80-83	620-201	—
XT250L/LC Dual Sport	1984	620-204	—
XV250U/UC/W/WC/A/AC	88-90	620-206	—
XV250G/GC-K/KC Route 66	95-98	620-206	—
XV250L/LC Virago 250	1999	620-206	—
XV250P/PC/R/RC Virago 250	02-03	620-206	—
XV250S/SC/T/TC Virago 250	04-05	620-206	—
XV250V/VC Virago 250	2006	620-206	—
XT350N/NC-M/MC Dual Sport	85-00	620-204	—
XS360C/D	76-77	620-201	—
FZR400U/SUC/W/SWC/A/SAC	88-90	620-207	—
XS400D/E/2E/F/2F	77-79	620-201	—
XS4002E/2F	78-79	620-201	—
XS400G/H Special II	80-81	620-201	—
XS400J/K Maxim	82-83	620-201	—
XS400RJ/RK Seca	82-83	620-201	—
XS400SG/SH Special	80-81	620-201	—
XS400SJ Heritage Special	1982	620-201	—
SR500E/F/G/H	78-81	620-202	—
TX500/A	73-74	620-204	—
XS500B/C/D/E	75-78	620-204	—
XT500C/D/E/F/G/H Dual Sport	76-81	620-202	—
XV500K Virago	1983	620-201	—
XV535T/TC/U/UC Virago	87-88	620-201	—
XV535A/AC Virago	1990	620-201	—
XV535E/EC-M/MC Virago	93-00	620-201	—
XV535SF/SFC-SJ/SJC Virago	94-97	620-201	—
XJ550H/J/K Maxim	81-83	620-203	621-201 (16)
XJ550RH/RJ/RK Seca	81-83	620-203	621-201 (16)
XT550J/K Dual Sport	82-83	620-201	—
XZ550RJ/RK Vision	82-83	620-204	621-201 (16)
FJ600L/LC/N/NC	84-85	620-203	621-201 (16)
FZ600S/SC/T/TC/U/UC	86-88	620-203	621-201 (16)
FZR600W/WC/AC	89-90	620-207	—
FZR600RA/RAC-RK/RKC	90-99	620-207	—
SRX600S/SC	1986	620-201	—
XJ600SD/SDC-SK/SKC Seca II	92-98	620-205	—
XT600L/LC-EG/EGC Dual Sport	84-95	620-201	—
YX600S/SC-A/AC Radian	86-90	620-204	621-201 (16)
YZF-R6SN/SNC Champion Limited	2001	—	—
XJ650G/H/J/K Maxim	80-83	620-201	—
XJ650LH Midnight Maxim	1981	620-201	—
XJ650LJ/LK Seca Turbo	82-83	620-201	—
XJ650RJ Seca	1982	620-201	—
XS1/XS1B/XS2-650	70-72	620-202	—
TX650/A	73-74	620-202	—
XS650B/C/D/E/F/2F	75-79	620-202	—
XS650G/H Special II	80-81	620-202	—
XS650SE/SF/SG Special	78-80	620-202	—
XS650SH/SJ/SK Heritage Special	81-83	620-202	—
XVS650AK/AKC-AV/AVC	98-06	620-201	—
V-Star Classic			
XVS650ATR/ATRC-ATV/ATVC	03-06	620-201	—
V-Star Silverado			
XVS650ATS V-Star Silverado	2004	620-201	—
XVS650ATT/ATTC V-Star Silverado	2005	620-201	—
XVS650K/KC-T/TC V-Star Custom	98-05	620-201	—
FZ700T/TC	1987	620-205	—
FZX700S/SC/T/TC Fazer	86-87	620-205	—
XJ700N/NC/S/SC Maxim	85-86	620-201	—
XJ700XN/XNC/XS/XSC Maxim	85-86	620-201	—
XV700L/LC/N/NC Virago	84-85	620-202	—
XV700CS/CSC/CT/CTC Virago	86-87	620-202	—
XV700SS/SSC Virago	1986	620-202	—

Yamaha Street

Model	Year	Valve Stem Seal Pk/10	Valve Keeper Each
FZ750N/S/SC	85-86	620-205	—
FZ750U/UC	1988	620-205	—
FZR750RT/RU	87-88	620-205	—
TX750/A	73-74	620-201	—
XJ750J/K Maxim	82-83	620-201	—
XJ750MK Midnight Maxim	1983	620-201	—
XJ750RH/RJ/RK Seca	81-83	620-201	—
XS750D/2D/E/F	77-79	620-201	—
XS750SE/SF Special	78-79	620-201	—
XV750H/J/K Virago	81-83	620-202	—
XV750MK Midnight Virago	1983	620-202	—
XV750U/UC-H/HC Virago	88-96	620-201	—
XV750H1/H1C/J1/J1C Virago	96-97	620-201	—
YZF750RF/RFC	1994	620-207	—
YZF750RH/RHC/RJ/RJC/RK/RKC	96-98	620-207	—
TDM850D/DC/E/EC	92-93	620-204	—
XS850G/H	80-81	620-201	—
XS850LG/LH Midnight Special	80-81	620-201	—
XS850SG/SH Special	80-81	620-201	—
XJ900RK Seca	1983	620-201	—
XV920J/K Virago	82-83	620-202	—
XV920MK Midnight Virago	1983	620-202	—
FZS1000N/NC/P/PC/R/RC FZ1	01-03	—	—
FZS1000S/SC/T/TC FZ1	04-05	—	—
FZS1000SPR/SPRC FZ1	2003	—	—
FZR1000T/TC/U/UC	87-88	620-205	—
FZR1000W/WC-G/GC	89-95	620-207	—
GTS1000AE/AEC/AF/AFC	93-94	620-207	—
XV1000L/LC/N/NC Virago	84-85	620-202	—
YZF1000RJ/RJC	1997	—	—
YZF1000RK/RKC	1998	—	—
YZF-R1L/LC/M/MC/N/NC/P/PC R1	99-02	—	—
YZF-R1R/RC/S/SC/T/TC/V/VZ R1	03-06	—	—
YZF-R1SN/SNC Champions LTD.ED	2001	—	—
FJ1100L/LC/N/NC	84-85	620-204	—
XJ1100J Maxim	1982	620-201	—
XS1100E/F/G/H	78-81	620-201	—
XS1100LG/LH Midnight Special	80-81	620-201	—
XS1100SF/SG/SH Special	79-81	620-201	—
XV1100S/SC-L/LC Virago	86-99	620-202	—
XV1100SH/SHC/SJ/SJC Virago	96-97	620-202	—
XV1100SK/SKC Virago	1998	620-202	—
XVS1100AM/AMC-AS/ASC	00-04	620-202	—
V-Star 1100 Classic			
XVS1100ATR/ATRC-ATV/ATVC	03-06	620-202	—
V-Star 1100 Silverado			
XVS1100AWR/AWRC-AWV/VC	03-06	620-202	—
V-Star 1100 Classic			
XVS1100L/LC-T/TC	99-05	620-202	—
V-Star 1100 Custom			
FJ1200S/SC/T/TC	86-87	620-204	—
FJ1200W/WC/A/AC/B/BC/D/DC	89-92	620-204	—
FJ1200AD/ADC/AE/AEC (ABS)	92-93	620-204	—
VMX12N/NC/S/SC V-Max	85-86	620-204	—
VMX12U/UC-V/VC V-Max	88-06	620-204	—
XVZ12TK/L/KC2 Venture	83-84	—	621-201 (32)
XVZ12TDK Venture Royale	1983	—	621-201 (32)
XVZ12DL/DKC2/DN Venture Royale	84-85	—	621-201 (32)
FJ1300R	03-12	620-205	—
FJ1300AS ABS	04-12	620-205	—
XVZ13DS/DSC-DE/DEC	86-93	—	621-201 (32)
Venture Royale			
XVZ13T/TC/U/UC Venture	87-88	—	621-201 (32)
XVZ13AH/AHC-AM/AMC Royal Star	96-00	—	621-201 (16)
XVZ13AT Royal Star Tour Classic	96-00	—	621-201 (16)
XVZ13LT Royal Star Tour Deluxe	97-01	—	621-201 (16)
XVZ13TF Royal Star Venture	99-01	—	621-201 (16)
XVZ13TFS Venture Limited Edition	2000	—	621-201 (16)

Vesrah Valve Stem Seals & Valve Keepers

Yamaha ATV

Model	Year	Valve Stem Seal Pk/10	Valve Keeper Each
YFM50 S-X Raptor 50	04-08	620-206	—
YFM80GT/GV/GHV Grizzly 80	05-06	620-206	—
YFM80N/S/T/U/W/A/B/D/G Moto-4	85-95	620-206	—
YFM80H/J/K/L/M/MC/N/NC Badger	96-01	620-206	—
YFM80WP/WR/WS Raptor	02-04	620-206	—
YFM80R T-X Raptor	05-08	620-206	—
YFM100T/U/W/A/B Champ	87-91	620-206	—
YFA1W Breeze	1989	620-206	—
YFA1B/D/E/F/G/H/J/K/L Breeze	91-00	620-206	—
YFA1M/MC/N/NC/P/PC Breeze	00-02	620-206	—
YFA1R/RC/S/SC Breeze	03-04	620-206	—
YFM125S-B Grizzly	04-12	620-206	—
YFM125GHT-X Grizzly 125 Hunter	05-08	620-206	—
YFM125GHV Grizzly 125 Hunter	2006	620-206	—
YFM200DXS/DXT/DXU/DXW Moto-4	86-89	620-203	621-201 (4)
YFM200N Moto-4	1985	620-203	621-201 (4)
YTM200K/L/N Tri-Moto	83-85	620-203	621-201 (4)
YTM200EK/EL Tri-Moto	83-84	620-203	621-201 (4)
YTM200ERN Tri-Moto	1985	620-203	621-201 (4)
YFM225S/T/U Moto-4	86-88	620-203	621-201 (4)
YTM225DRN/DRS Tri-Moto	85-86	620-203	621-201 (4)
YTM225DXK/DXL/DXN Tri-Moto	83-85	620-203	621-201 (4)
YFB250D/E/F/G Timberwolf 2WD	92-95	620-203	621-201 (4)
YFB250H/J Timberwolf 2WD	96-97	620-203	621-201 (4)
YFB250FWF-FWM Timberwolf 4WD	94-00	620-203	621-201 (4)
YFB250UH/UJ/UK Timberwolf 2WD	96-98	620-203	621-201 (4)
YFM250BT/BV Bruin 250	05-06	620-203	621-201 (4)
YFM250W/A/B Moto-4	89-91	620-203	621-201 (4)
YFM250XL/XLC Beartracker 2WD	1999	620-203	621-201 (4)
YFM250XM/XMC Beartracker 2WD	2000	620-203	621-201 (4)
YFM250XHN Beartracker Real Tree	2001	620-203	621-201 (4)
YFM250XHP Beartracker Real Tree	2002	620-203	621-201 (4)
YFM250XN/XP/XR/XS Beartracker	01-04	620-203	621-201 (4)
YFM350S Raptor	2004	620-201	—
YFM350RSET/RESV Raptor 350 SE	05-06	620-201	—
YFM350RT-Y Raptor	05-09	620-201	—
YFM350ERT-ERA Moto-4	87-90	620-201	—
YFM350ERD-ERG Moto-4	92-95	620-201	—
YFM350FAS Bruin 350 Auto 4x4	2004	620-201	—
YFM350FAHS Bruin 350 Auto 4x4 Hardwood Camo	2004	620-201	—
YFM350FHL/FHLC Wolverine	1999	620-201	—
YFM350FWT-FWJ Big Bear	87-97	620-201	—
YFM350FWBJ/K/KC/L/LC Big Bear	97-99	620-201	—
YFM350FXG-FXR Wolverine	95-03	620-201	—
YFM350UH-UL Big Bear	96-99	620-201	—
YFM350XT-XS Warrior	87-04	620-201	—
YFM350AS Bruin 350 Auto 2WD	2004	620-201	—
YFM350BAT/BAV Bruin 2WD	05-06	620-201	—
YFM350FAS/FAT/FAV Bruin 350 Auto 4WD	04-06	620-201	—
YFU1W/TW Prohauler	1989	620-204	621-201 (4)
YFM400S Big Bear 400 2WD	2004	620-201	—
YFM400P Big Bear 400 2WD	2002	620-201	—
YFM400AM/AMC Kodiak2WD	2000	620-201	—

Yamaha Dual Sport & Offroad

Model	Year	Valve Stem Seal Pk/10	Valve Keeper Each
YFM400AR Kodiak4WD	2003	620-201	—
YFM400FM/FMC Big Bear 4WD	2000	620-201	—
YFM400FP Big Bear 4WD	2001	620-201	—
YFM400FAM/FAMC/N/P/R/RB	00-03	620-201	—
YFM400FAHM/MC/N/NC Kodiak	00-01	620-201	—
YFM400FHP Big Bear 400 4WD	2002	620-201	—
YFM400FHAP Kodiak 4x4 Hunter	2002	620-201	—
YFM400FWE-FWL/FWLC Kodiak	93-90	620-201	—
YFM400FWR Big Bear	2003	620-201	—
YFM400FWAHM/MC Kodiak 4WD	2000	620-201	—
YFM400FWNM/MC/N Big Bear 4WD	00-01	620-201	—
YFM400FWNHM/MC/N Big Bear	00-01	620-201	—
YFM400HP Big Bear 2WD	2002	620-201	—
YFM400NM/NMC/N Big Bear 2WD	00-01	620-201	—
YFM400NR Big Bear 2WD	2003	620-201	—
YFM400NHN Big Bear 2WD	2001	620-201	—
YFM400FAS/T/FV Kodiak 400 4x4	04-06	620-201	—
YFM400FAHS/T/V Kodiak 400 4x4	04-06	620-201	—

Yamaha Dual Sport & Offroad

Model	Year	Valve Stem Seal Pk/10	Valve Keeper Each
YFM450FAR/FARB Kodiak 4WD	2003	620-201	—
YFM450FAS/FAT/FAV Kodiak 450	04-06	620-201	—
YFM450FAHS/T/V Kodiak 450	04-06	620-201	—
YFM450FXV Wolverine 450 4x4	2006	620-201	—
YFZ450S/T/V	04-06	620-205 Ex	—
YFM600FWAK/FWAKC Grizzly	1998	620-201	—
YFM600FWAL/FWALC Grizzly	1999	620-201	—
YFM600FWAM/FWAMC Grizzly	2000	620-201	—
YFM600FWHM/FWHMC	2000	620-201	—
YFM600FHN Grizzly Realtree Hunter	2001	620-201	—
YFM600FN Grizzly	2001	620-201	—
YFM660FAT/FAV Grizzly 660	05-06	620-203	621-201 (10)
YFM660FAHT/FAHV Grizzly 660	05-06	620-203	621-201 (10)
YFM660FAHWT	2005	620-203	621-201 (10)
YFM660FASET/FASEV Grizzly 660	05-06	620-203	621-201 (10)
YFM660FAP Grizzly	2002	620-203	621-201 (10)
YFM660FHAP Grizzly Hunter	2002	620-203	621-201 (10)
YFM660FHP Grizzly	2002	620-203	621-201 (10)
YFM660FHR-HD	2003	620-203	621-201 (10)
YFM660FHR-W	2003	620-203	621-201 (10)
YFM660FHRWL Grizzly WH	2003	620-203	621-201 (10)
YFM660FHRH Grizzly	2003	620-203	621-201 (10)
YFM660FHS Grizzly 660	2004	620-203	621-201 (10)
YFM660FHSWL Grizzly	2004	620-203	621-201 (10)
YFM660FLES Grizzly 660 Auto 4x4	2004	620-203	621-201 (10)
YFM660FP/FR/FS Grizzly 660	02-04	620-203	621-201 (10)
YFM660FSAP Grizzly Silver	2002	620-203	621-201 (10)
YFM660FRGY Grizzly	2003	620-203	621-201 (10)
YFM660RSET Raptor 660 SE	01-03	620-203	621-201 (10)
YFM660RN/RNC/RP/RPB Raptor	01-02	620-203	621-201 (10)
YFM660RR/RRB/RRC Raptor 660R	2003	620-203	621-201 (10)
YFM660RR/RS/RT Raptor 660	03-05	620-203	621-201 (10)
YFM660RLER/RLES Raptor 660R	03-04	620-203	621-201 (10)
YFM700RV Raptor	2006	620-203	621-201 (10)
TT-R90M/MC-W	00-07	620-207	—
TT-R125M/MC/N/P/R/S	00-02	620-206	—
TT-R125ER/ES/ET/EV (eletric start)	03-06	620-206	—
TT-R125LN/LPC/LR/LER/LS/LES	01-04	620-206	—
TT-R125L M-V	05-09	620-206	—
TT-R125LWM	2000	620-206	—
XT125J/K/KC Dual Sport	82-83	620-203	621-201 (4)
BW200N/S Big Wheel	85-86	620-203	621-201 (4)
BW200ES/ET/EU Big Wheel	86-88	620-203	621-201 (4)
TW200T/TC-B1 Trailway	87-12	620-203	621-201 (4)
XT200J/K/KC Dual Sport	82-83	620-203	621-201 (4)
TT225S/T	86-87	620-203	621-201 (4)
TT225L/LC/RM/RMC	99-00	620-203	621-201 (4)
TT-R225N/NC/P/PC/R/RC/S	01-04	620-203	621-201 (4)
XT225D/DC-W/WC Serrow	92-07	620-203	621-201 (4)
TTR-230T/TC-B	05-12	620-203	621-201 (4)
TT250G/H/J	80-82	620-201	—
TT250RL/RLC/RM/RMC	99-00	620-205	—
TT-R250L/LC/M/MC	99-00	620-205	—
TT-R250N/NC/P/PC/R/RC/S/SC	01-04	620-205	—
TT-R250T/TC/V/VC	05-06	620-205	—
XT250G/H/J/K/KC Dual	80-83	620-201	—
XT250L/LC Dual Sport	1984	620-204	—
BW350T/U Big Wheel	87-88	620-201	—
TT350S/T	86-87	620-204	—
XT350N/NC-M/MC Dual Sport	85-00	620-204	—
WR400FK/FL/FM	98-00	620-205 Ex	—
YZ400FK/FL	98-99	620-205 Ex	—
WR426FN/FP	01-02	620-205 Ex	—
YZ426FM/FN/FP	00-02	620-205 Ex	—
WR450F S-A	03-11	620-205 Ex	—
YZ450F R-Y	03-09	620-205 Ex	—
TT500C/D/E/F/G/H	76-81	620-202	—
XT500C/D/E/F/G/H Dual Sport	76-81	620-202	—
XT550J/K Dual Sport	82-83	620-201	—
TT600K/L/N/S	83-86	620-201	—
XT600L/LC-EG/EGC Dual Sport	84-95	620-201	—

Vesrah Valve Stem Seals & Valve Keepers

Sudco Part Number to OEM Cross Reference

Valve Stem Keepers

Honda

OEM Reference	Vesrah Ref.	Order No.
14781-107-003	CC-1002	621-001
14781-MB4-000	CC-1003	621-003
14781-MA6-000	CC-1001	621-002
14781-HA5-003	CC-1003	621-003

Kawasaki

12011-002	CC-4006	621-606
12011-003	CC-4001	621-601
12011-004	CC-4002	621-604
12011-1002	CC-4003	621-602
12011-1003	CC-4004	621-603
12011-1051	CC-4005	621-605

Suzuki

12932-27A00	CC-3005	621-405
12932-45010	CC-3001	621-401

Yamaha

4G0-12118-00-00	CC-2001	621-201

Valve Stem Seals

Honda

OEM Reference	Vesrah Ref.	Order No.
12208-413-003	VS-1006	620-006
12208-MC0-003	VS-1006	620-006
12209-GB0-911	VS-1002	620-009
12209-GB0-912	VS-1002	620-009
12209-GB4-681	VS-1013	620-010
12209-GB4-682	VS-1013	620-010
12209-KE8-003	VS-1013	620-010
12209-KE8-005	VS-1013	620-010
12209-KL4-003	VS-1006	620-006
12209-MA6-003	VS-1013	620-010
12209-MA6-005	VS-1013	620-010
12209-MB9-003	VS-1007	620-005
12209-MC8-005	VS-1007	620-005
12209-ML0-721	VS-1014	620-014
12209-ML0-722	VS-1014	620-014
12209-MN1-671	VS-1007	620-005
12209-MZ5-003	VS-1014	620-014
12209-107-760	VS-1002	620-009

Valve Stem Seals *(cont.)*

Honda

OEM Reference	Vesrah Ref.	Order No.
12209-300-003	VS-1003	620-002
12209-413-003	VS-1012	620-012
12209-422-005	VS-1006	620-006
12209-428-003	VS-1006	620-006
12209-429-005	VS-1007	620-005
12212-MR5-671	VS-1007	620-005
14730-028-013	VS-1001	620-001
14730-028-013	VS-1001	620-001

Kawasaki

92049-016	VS-4001	620-601
92049-1062	VS-4003	620-603
92049-1153	VS-4002	620-602
92049-1218	VS-4004	620-604
92049-1349	VS-4006	620-606
92049-S021	VS-3002	620-401
92049-S006	VS-3004	620-404

Suzuki

09289-05003	VS-3002	620-401
09289-05008	VS-3003	620-403
09289-05010	VS-3004	620-404
09289-05011	VS-3004	620-404
09289-05015	VS-3002	620-401
09289-07002	VS-3001	620-402

Yamaha

1J7-12119-01-00	VS-2001	620-201
1L9-12119-00-00	VS-2001	620-201
1WG-12119-00-00	VS-2007	620-207
2HX-12119-00-00	VS-2006	620-206
22F-12119-01-00	VS-2006	620-206
30X-12119-00-00	VS-2004	620-204
33M-12119-00-00	VS-2005	620-205
341-12119-02-00	VS-2002	620-202
4G0-12119-00-00	VS-2003	620-203
5H0-12119-00-00	VS-2003	620-203
5Y1-12119-00-00	VS-2004	620-204
M01-12129-00-00	VS-2001	620-201

ATV & Offroad Engine Oil Seal Kits

Engine Oil Seal Kits

ATV and Offroad motorcycle engine oil seal kits for a complete engine rebuild. Available for 2-stroke and 4-stroke applications.

Honda ATV

Model	Year	K&S No.	Order No.
ATC250ES Big Red	85-87	50-1045	504-009
ATC250R	85-86	50-1001	504-011
ATC250SX	85-87	50-1045	504-009
TRX250 Four Trax 250	85-87	50-1045	504-009
TRX250R Four Trax 250R	86-89	50-1001	504-011
TRX250X Four Trax 250X	87-88	50-1044	504-008
TRX250X Four Trax 250X	91-92	50-1044	504-008
TRX300 Four Trax 300	88-00	50-1042	504-007
TRX300EX Four Trax 300EX	93-00	50-1043	504-010
TRX300EX Sport Trax 300EX	01-05	50-1043	504-010
TRX300FW Four Trax 300	1988	50-1041	504-006
TRX300FW Four Trax 300	90-00	50-1041	504-006
TRX400EX Four Trax 400E	99-00	50-1046	504-070
TRX400EX Sport Trax 400EX	01-08	50-1046	504-070

Honda Offroad

CRF50F	04-09	51-1048	504-082
XR50R	00-03	51-1048	504-082
Z50R	79-89	51-1048	504-082
Z50R	91-99	51-1048	504-082
Z50RD	1986	51-1048	504-082
CR60R	83-84	51-1003	504-075
CRF70F	04-09	51-1048	504-082
XR70R	97-03	51-1048	504-082
CR80R	86-02	51-1003	504-075
CR80RB	00-02	51-1003	504-075
CRF80F	04-09	51-1046	504-080
XR80	79-84	51-1046	504-080
XR80R	85-88	51-1046	504-080
XR80R	90-91	51-1046	504-080
XR80R	93-03	51-1046	504-080
CR85R	03-07	51-1003	504-075
CR85RB	03-07	51-1003	504-075
CRF100F	04-09	51-1043	504-017
XR100	81-84	51-1043	504-017
XR100R	85-03	51-1043	504-017
CR125R	87-03	51-1001	504-012
XR185	1979	51-1044	504-018
TLR200	86-87	51-1044	504-018
XR200	80-84	51-1044	504-018
XR200R	81-83	51-1044	504-018
XR200R	1985	51-1045	504-019
XR200R	86-02	51-1044	504-018
CR250R	88-07	51-1002	504-013
XR250L	91-96	51-1045	504-019
XR250R	86-04	51-1045	504-019
XR400R	96-04	51-1041	504-015
CRF450R	02-05	51-1047	504-081
CR500R	88-01	51-1002	504-013
XR600R	89-00	51-1042	504-016
XR650L	93-08	51-1042	504-016

Kawasaki ATV

KLF220A1-A15 Bayou 220	88-02	50-2042	504-025
KLF250A1-A9F Bayou 250	03-09	50-2042	504-025
KLF300B1-B17 Bayou 300	88-04	50-2041	504-024
KLF300C1-C16 Bayou 300 4x4	89-06	50-2041	504-024

Kawasaki Offroad

KX60B1-B19	85-03	51-2003	504-022
KX65A1-A9F	00-09	51-2004	504-023
KX80E3	1985	51-2003	504-022

Kawasaki Offroad

Model	Year	K&S No.	Order No.
KX80G1/G2	86-87	51-2003	504-022
KX80J Big Wheel	1987	51-2003	504-022
KX80L1/L2/L3	88-90	51-2003	504-022
KX80N1/N2/N3	88-90	51-2003	504-022
KX80R1-R7	91-97	51-2003	504-022
KX80T1/T2/T3/T4 Big Wheel	91-94	51-2003	504-022
KX80W1/W2/W3	98-00	51-2004	504-023
KX85A1-A9F	01-09	51-2004	504-023
KX100B5/B6/B7	95-97	51-2003	504-022
KX100C1/C2/C3	98-00	51-2004	504-023
KX100D1-D9F	01-09	51-2004	504-023
KX125F1/G1	88-89	51-2005	———
KX125H1/H2	90-91	51-2005	———
KX125J1/J2	92-93	51-2005	———
KX125K1/K2/K3/K4/K5	94-98	51-2002	504-021
KX125L1/L2/L3/L4	99-02	51-2002	504-021
KX125M1/M2/M3	03-05	51-2002	504-021
KDX250D1/D2/D3/D4	91-94	51-2001	504-020
KX250F1/G1	88-89	51-2001	504-020
KX250H1/H2	90-91	51-2001	504-020
KX250J1/J2	92-93	51-2001	504-020
KX250K1/K2/K3/K4/K5	94-98	51-2001	504-020
KX250L1/L2/L3/L4	99-02	51-2001	504-020
KX500B2/C1/D1	86-88	51-2006	504-026
KX500E1-E16	89-04	51-2006	504-026

KTM Offroad

50 SX/SXR Adventure	97-99	51-6001	504-090
50 SX/SXR Mini-Adventure	00-01	51-6001	504-090
50 SX/SXR Pro-Jr., Pro-Sr.	97-01	51-6001	504-090
50 SX Jr.Adventure	00-01	51-6001	504-090
50 SX Sr.Adventure	00-01	51-6001	504-090
50 Mini-Adventure	02-03	51-6002	504-091
50 Junior Adventure	02-03	51-6002	504-091
50 Senior Adventure	02-03	51-6002	504-091
50 SX Pro Junior LC	01-03	51-6002	504-091
50 SX Pro Senior LC	01-03	51-6002	504-091
60 SX	98-00	51-6003	504-092
65 SX	98-03	51-6003	504-092
125 SX/MXS/EXC	98-04	51-6004	504-093
200 SX/MXS/EXC	98-04	51-6004	504-093
250 SX/MXC/EXC	92-99	51-6005	504-094
250 SX	00-02	51-6005	504-094
250 MXC/EXC (Except EXC racing 02-03)	00-03	51-6005	504-094
250 SX/MXC/EXC (Except EXC racing 04)	2004	51-6005	504-094
300 SX/MXC/EXC	92-04	51-6005	504-094
360 SX/MXC/EXC	96-97	51-6005	504-094
380 SX/MXC/EXC	98-02	51-6005	504-094

ATV & Offroad Engine Oil Seal Kits

Polaris ATV

Model	Year	K&S No.	Order No.
2 x 4	1990	50-5003	504-098
4 x 4	1990	50-5003	504-098
250 2 x 4	1993	50-5003	504-098
250 4 x 4	1993	50-5003	504-098
250 6 x 6	1993	50-5003	504-098
300 2 x 4	94-95	50-5003	504-098
300 4 x 4	94-95	50-5003	504-098
300 6 x 6	1994	50-5003	504-098
350L 2 x 4	90-93	50-5001	504-097
350L 4 x 4	90-93	50-5001	504-097
350L 6 x 6	1993	50-5001	504-097
400L 2 x 4	94-95	50-5001	504-097
400L 4 x 4	1994	50-5001	504-097
400L 6 x 6	94-96	50-5001	504-097
Big Boss	1990	50-5003	504-098
Big Boss 250 6 x 6	1992	50-5003	504-098
Big Boss 400L 6 x 6	1997	50-5003	504-098
Big Boss 4 x 6	1989	50-5003	504-098
Big Boss 4 x 6	91-92	50-5003	504-098
Big Boss 6 x 6	1991	50-5003	504-098
Cyclone	1987	50-5003	504-098
Scrambler	85-86	50-5003	504-098
Scrambler	1996	50-5001	504-097
Scrambler 2 x 4	2000	50-5001	504-097
Scrambler 4 x 4	1995	50-5001	504-097
Scrambler 400	98-00	50-5001	504-097
Scrambler 400L	1997	50-5001	504-097
Scrambler 400 2 x 4	01-02	50-5001	504-097
Scrambler 400 4 x 4	2002	50-5001	504-097
Sport 400	1995	50-5001	504-097
Sport 400	1999	50-5001	504-097
Sport 400L	1994	50-5001	504-097
Sport 400L	96-98	50-5001	504-097
Sportsman 4 x 4	93-96	50-5001	504-097
Sportsman 400L	1997	50-5001	504-097
Trailblazer	90-95	50-5003	504-098
Trailblazer	97-98	50-5003	504-098
Trailblazer	01-02	50-5003	504-098
Trailblazer	04-05	50-5003	504-098
Trailblazer ES	1996	50-5003	504-098
Trailblazer 250	99-00	50-5003	504-098
Trailblazer 250	2003	50-5003	504-098
Trailblazer 400	2003	50-5001	504-097
Trail Boss	85-99	50-5003	504-098
Trail Boss 2 x 4	88-89	50-5003	504-098
Trail Boss 2 x 4	91-92	50-5003	504-098
Trail Boss 4 x 4	87-89	50-5003	504-098
Trail Boss 4 x 4	91-92	50-5003	504-098
Trail Boss 350L 2 x 4	91-92	50-5001	504-097
Trail Boss 350L 4 x 4	91-92	50-5001	504-097
Xplorer	00-01	50-5003	504-098
Xplorer 4 x 4	2002	50-5003	504-098
Xplorer 300	96-99	50-5003	504-098
Xplorer 400	99-02	50-5001	504-097
Xplorer 400 4 x 4	1995	50-5001	504-097
Xplorer 400L	96-98	50-5001	504-097
Xpress 300	96-99	50-5003	504-098
Xpress 400	1996	50-5001	504-097
Xpress 400L	1997	50-5001	504-097

Suzuki ATV

LT250RF/RG Quadracer	85-86	50-3001	504-031
LT250RJ/RK/RL/RM/RN Quadracer	88-92	50-3002	504-032
LT-F250J/K/L/M/N/P Quadrunner	88-93	50-3041	504-038
LT-F250R/S/T/V/W/X Quadrunner	94-99	50-3041	504-038
LT-F250FX-FK2 Quadrunner	99-02	50-3041	504-038
LT-4WDH-WDV 4x4 Quadrunner	87-97	50-3041	504-038
LT-F4WDV/WDW Quadrunner	97-98	50-3041	504-038
LT-F4WDXM-WDXW King Quad	91-98	50-3041	504-038
LT500RJ/RK/RL Quadracer	88-90	50-3002	504-032

Suzuki Offroad

Model	Year	K&S No.	Order No.
RM60K3	2003	51-2003	504-022
RM65K3/K4/K5	03-05	51-2004	504-023
RM80L/M/N/P/R/S	90-95	51-3003	504-035
RM80T/V/W/Y/K1	96-01	51-3003	504-035
RM85K2/K3/K4/K5/K6/K7/K8	02-08	51-3003	504-035
RM100K3	2003	51-2004	504-023
RM125N/P/R/S/T/V/W/X/Y	92-00	51-3001	504-033
RM125K1/K2/K3	01-03	51-3001	504-033
RM250R/S/T/V/W/X/Y	94-00	51-3002	504-034
RM250K1/K2/K3	01-02	51-3002	504-034
RM250K4/K5/K6/K7/K8	03-08	51-3004	504-036
RMX250S/T/V/W	95-98	51-3002	504-034

Yamaha ATV

YFS200U-T Blaster	88-05	50-4001	504-041
YFM350ERT/ERU/ERW Moto-4	87-89	50-4041	504-045
YFM350ERA Moto-4	1990	50-4041	504-045
YFM350ERD/ERE Moto-4	92-93	50-4041	504-045
YFM350ERF/ERG Moto-4	94-95	50-4041	504-045
YFM350FHL/FHLC Big Bear	1999	50-4041	504-045
YFM350FWBJ-FWBL Big Bear	97-99	50-4041	504-045
YFM350FWT-FWJ Big Bear	87-97	50-4041	504-045
YFM350FXG-FXT Wolverine	95-02	50-4041	504-045
YFM350UH/UJ/UK Big Bear 2WD	96-98	50-4041	504-045
YFM350UL Big Bear 2WD	1999	50-4041	504-045
YFM350XT-XR Warrior	87-04	50-4042	504-046
YFZ350T-V Banshee	87-06	50-4002	504-042
YFZ350SET Banshee	2005	50-4002	504-042
YFM400FWE-FWK/FWKC Kodiak	93-98	50-4041	504-045
YFM400FWL	1999	50-4041	504-045
YFM400FWNHM Big Bear 4WD	2000	50-4041	504-045
Buckmaster			
YFM400FWNM/FWNMC Big Bear	2000	50-4041	504-045
YFM400NN/NHN/P/HP/NR/S	01-04	50-4041	504-045
Big Bear 2WD			
YFM660RN/RNC/RP/RPB Raptor	01-02	50-4043	504-056
YFM660RR/RRC/RS/RT Raptor	03-05	50-4043	504-056
YFM660RLER/RLES	03-04	50-4043	504-056
Raptor 660R Limited Edition Blk			
YFM660RSET Raptor SE	2005	50-4043	504-056

Yamaha Offroad

YZ80E1/F1/G1/H1	93-96	51-4004	504-050
YZ80J1/K1/L1/M1/N1	97-01	51-4004	504-050
YZ85P/R/S/T/V/W1/X	02-08	51-4007	504-055
YZ125F/G/H/J1	94-97	51-4001	504-047
YZ125J1/K1/L1/M1	98-00	51-4003	504-049
YZ125N/P/R/S1	01-04	51-4006	504-052
WR250ZB-ZJ	91-97	51-4002	504-048
YZ250WRW/WRA Offroad	89-90	51-4002	504-048
YZ250U/W/A1/B1/D1/E1	88-93	51-4002	504-048
YZ250F1/G1/H1/J1/K1	94-98	51-4002	504-048
YZ250L1/M1/N1	99-01	51-4005	504-051
YZ250P/R/S1/T1/V/W/X/X1	02-08	51-4005	504-051
WR400FK/FL/FM	98-00	51-4041	504-053
YZ400FK/FL	98-99	51-4041	504-053
WR426FN/FP	01-02	51-4041	504-053
YZ426FM/FN/FP	00-02	51-4041	504-053
WR450FR	2003	51-4041E	504-054
WR450FS/FT	04-05	51-4041	504-053
YZ450FR	2003	51-4041E	504-054
YZ450FS/FT/FV/FW/FX	04-08	51-4041	504-053

Stator Cover Gaskets

Stator Cover Gaskets (Alternator/Generator)

Sold each. ***Made in Japan.***

Honda Street

Model	Year	Vesrah Ref	Order No.
CB350F/F1 Super Sport	72-74	VY-1003	640-1003
CB350G	1973	VY-1004	640-1004
CB350K0/K1-K4 Super Sport	68-73	VY-1004	640-1004
CL350K0/K1-K5 Scrambler	68-73	VY-1004	640-1004
SL350K0/K1/K2 Moto Sport	70-72	VY-1004	640-1004
CB360K0	1974	VY-1002	640-1002
CB360T	75-76	VY-1004	640-1004
CB400F Super Sport	75-77	VY-1003	640-1003
CB450D Super Sport 450	1967	VY-1002	640-1002
CB450K0 Super Sport 450	65-68	VY-1002	640-1002
CB450K1-K7 Super Sport 450	68-74	VY-1002	640-1002
CL450 Scrambler 450	1967	VY-1002	640-1002
CL450K1-K6 Scrambler 450	68-74	VY-1002	640-1002
CB500T	75-76	VY-1002	640-1002
CB600F 559	04-06	VK-1081	641-1081
CBR600F2 Hurricane	91-94	VK-1081	641-1081
CBR600F3 Hurricane	95-98	VK-1081	641-1081
CBR600SE	1998	VK-1081	641-1081
CBR600SJR Replica	1996	VK-1081	641-1081
NX650	88-89	VK-1070	641-1070
XR650L Dual Sport	93-07	VK-1070	641-1070
CB750A Automatic	76-78	VY-1001	640-1001
CB750C Custom	80-82	VK-1009	641-1009
CB750F Super Sport	75-78	VY-1001	640-1001
CB750F Super Sport	79-82	VK-1009	641-1009
CB750K0/K1-K5 750 Four	69-75	VY-1001	640-1001
CB750K 750 Four	76-78	VY-1001	640-1001
CB750K	79-82	VK-1009	641-1009
CB750L LTD	1979	VK-1009	641-1009

Honda ATV

ATC250ES	1985	VK-1034	641-1034
ATC250SX	1985	VK-1034	641-1034
TRX250X Fourtrax	87-88	VK-1060	641-1060
TRX250X Fourtrax	91-92	VK-1060	641-1060
TRX300 Fourtrax 300	88-00	VK-1034	641-1034
TRX300EX Fourtrax 300 EX	93-00	VK-1087	641-1087
TRX300EX Sportrax 300 EX	01-06	VK-1087	641-1087
TRX300FW Fourtrax 300 4x4	1988	VK-1034	641-1034
TRX300FW Fourtrax 300 4x4	90-00	VK-1034	641-1034
TRX400EX Fourtrax 400EX	99-00	VK-1088	641-1088
TRX400EX Sportrax 400EX	01-06	VK-1088	641-1088

Honda Dual Sport & Offroad

XL75	77-79	VK-1019	———
XR75	77-79	VK-1019	———
XL80S	80-85	VK-1019	———
XR80	79-84	VK-1019	———
XR80R	85-88	VK-1019	———
XR80R	90-91	VK-1019	———
XR80R	93-03	VK-1019	———
CRF80F	04-06	VK-1019	———
CRF100F	03-06	VK-1019	———
XR100R	92-03	VK-1019	———
XR250R	96-04	VK-1086	641-1086
XR400R	92-03	VK-1088	641-1088
XR600R	88-00	VK-1028	641-1028
NX650	88-89	VK-1070	641-1070
XR650L Dual Sport	93-07	VK-1070	641-1070

Kawasaki Street

Model	Year	Vesrah Ref	Order No.
EN450A1-A6 LTD 454	85-90	VY-4031	640-4031
EN500A1-A7 Vulcan 500	90-96	VY-4031	640-4031
EN500C1-C10 Vulcan 500 LTD	96-05	VY-4031	640-4031
EN500C6F/ C7F Vulcan 500 LTD	06-07	VY-4031	640-4031
EX500A1-A7	87-93	VY-4031	640-4031
EX500D1/D2/D3 Ninja 500	94-96	VY-4031	640-4031
EX500D4-D12 Ninja 500R	97-05	VY-4031	640-4031
EX500D6F/ D7F Ninja 500R	06-07	VY-4031	640-4031
KZ550A1/A2/A3/A4	80-83	VY-4014	640-4014
KZ550C1/C2/C3/C4 LTD	80-83	VY-4014	640-4014
KZ550D1 GPz	1981	VY-4014	640-4014
KZ550F1 Spectre	1983	VY-4014	640-4014
KZ550F2 LTD	1984	VY-4014	640-4014
KZ550H1/H2 GPz	82-83	VY-4014	640-4014
KZ550M1 LTD	1983	VY-4014	640-4014
ZR550B1/B2/B3/B4 Zephyr	90-93	VY-4014	640-4014
ZX550A1/A2/A3 GPz	84-86	VY-4014	640-4014
KL600B1/B2 KLR600 Dual Sport	85-86	VY-4033	640-4033
ZL600A1/A2 Eliminator	86-87	VY-4028	640-4028
ZL600B2/B3 Eliminator	96-97	VY-4028	640-4028
ZX600A1/A2/A3 Ninja 600R	85-87	VY-4028	640-4028
ZX600B1 Ninja 600RX	1987	VY-4028	640-4028
ZX600C1-C10 Ninja 600R	88-97	VY-4028	640-4028
KL650A1-A19 KLR650 Dual Sport	87-05	VY-4033	640-4033
KL650A6F/ A7F KLR650 Dual Sport	06-07	VY-4033	640-4033
KL650B2/B3 Tengai KLR650	90-91	VY-4033	640-4033
KZ650B2/B2A/B3	78-79	VY-4017	640-4017
KZ650C2/C3 Custom	78-79	VY-4017	640-4017
KZ650D1/D1A/D2 SR	78-79	VY-4017	640-4017
KZ650E1 LTD	1980	VY-4017	640-4017
KZ650F1	1980	VY-4017	640-4017
KZ650H1/H2/H3 CSR	81-83	VY-4017	640-4017
KZ700A1	1984	VY-4017	640-4017
ZN700A1/A2 LTD	84-85	VY-4017	640-4017
KZ750B1/B2/B3/B4 2-cylinder	76-79	VY-4019	640-4018
KZ750E1/E2/E3	80-82	VY-4017	640-4017
KZ750F1/F2 Spectre & LTD	83-84	VY-4017	640-4017
KZ750G1 LTD 2-cylinder	1980	VY-4018	640-4018
KZ750H1/H2/H3/H4 LTD	80-83	VY-4017	640-4017
KZ750K1/K2 2-cylinder	83-84	VY-4018	640-4018
KZ750L3	1983	VY-4017	640-4017
KZ750M1 CSR 2-cylinder	1983	VY-4018	640-4018
KZ750N1/N2 Spectre	82-83	VY-4017	640-4017
KZ750R1 GPz	1982	VY-4017	640-4017
ZX750A1/A2/A3 GPz	83-85	VY-4017	640-4017
ZX750E1/E2 GPz Turbo	84-85	VY-4017	640-4017
KZ900A4/A5	76-77	VY-4001	640-4001
KZ900B1 LTD	1976	VY-4001	640-4001
ZL900 A1, A2	85-86	VY-4026	640-4026
ZL900 A1/A1L, A2, A3	84-86	VY-4026	640-4026
Z1/Z1A/Z1B-900	73-75	VY-4001	640-4001
KG1000 A1-A6	86-91	VY-4026	640-4026
ZG1000 A6F	06	VY-4026	640-4026
ZG1000 A7-A19	92-05	VY-4026	640-4026
KZ1000A1/A2	77-78	VY-4001	640-4001
KZ1000A3/A3A/A4 MKII	79-80	VY-4001	640-4001
KZ1000B1/B2/B3/B4 LTD	77-80	VY-4001	640-4001
KZ1000C1/C1A/C2/C3/C4 Police	78-81	VY-4001	640-4001
KZ1000D1 Z1R	1978	VY-4001	640-4001
KZ1000D3 Z1R	1980	VY-4001	640-4001
KZ1000E1/E2 Shaft ST	79-80	VY-4001	640-4001
KZ1000G1 Classic LTD	1980	VY-4001	640-4001
KZ1000J1/J2/J3	81-83	VY-4001	640-4001
KZ1000K1/K2 LTD	81-82	VY-4001	640-4001
KZ1000M1/M2 CSR	81-82	VY-4001	640-4001
KZ1000P1-P21 Police	82-02	VY-4001	640-4001
KZ1000R1/R2 Replica	82-83	VY-4001	640-4001
ZX1000 A1, A2	86-87	VY-4026	640-4026
ZX1000 B1-B3	88-90	VY-4026	640-4026
KZ1100A1/A2/A3 Shaft	81-83	VY-4001	640-4001
KZ1100B1/B2 GPz	81-82	VY-4001	640-4001
KZ1100D1/D2 Spectre	82-83	VY-4001	640-4001
KZ1100L1 LTD	1983	VY-4001	640-4001
ZN1100B1/B2 LTD	84-85	VY-4001	640-4001
ZX1100A1/A2 GPz	83-84	VY-4001	640-4001
ZX1100 D7-D9	99-04	VY-4026	640-4026
ZR1200 A1-A5	01-05	VY-4026	640-4026

Kawasaki Street

Model	Year	Vesrah Ref	Order No.
KZ1300A1/A2/A3/A4	79-82	VY-4027	640-4027
KZ1300B2 Tourer	1980	VY-4027	640-4027
ZN1300A1-A6 Voyager	83-87	VY-4027	640-4027

Kawasaki ATV

KLF220A1-A15 Bayou 220	88-02	VY-4036	640-4036
KLF250A1/A2/A3/A6F Bayou 250	03-06	VY-4036	640-4036
KSF250A1-A17 Mojave	87-03	VY-4034	640-4034
KSF250A18 KFX250 Mojave	2004	VY-4034	640-4034
KXT250A1/A2 Tecate 3	84-85	VY-4004	640-4004
KXT250B1/B2 Tecate 3	86-87	VY-4004	640-4004
KEF300A1-A6 Lakota 300	95-00	VY-4049	640-4049
KEF300B1/B2/B3 Lakota Sport	01-03	VY-4049	640-4049
KLF300A1/A2 Bayou 300	86-87	VY-4029	640-4029
KLF300B1 Bayou 300	1988	VY-4029	640-4029
KLF300B2-B17 Bayou 300	89-04	VY-4049	640-4049
KLF300C1-C16 Bayou 300 4x4	89-04	VY-4037	640-4037
KVF300A1/A2/A3/A4 Prairie 300 4x4	99-02	VY-4049	640-4049
KVF300B1/B2/B3/B4 Prairie 300	99-02	VY-4049	640-4049

Kawasaki Dual Sport

KX80 G1, G2 Mini	86-87	VY-4026	640-4025
KX80 J2 Big Wheel	1987	VY-4025	640-4025
KX80 L2 Mini	1989	VY-4025	640-4025
KX80 N2 Big Wheel	1989	VY-4026	640-4025
KX250 E1	1987	VY-4043	640-4043
KX250 F1	1988	VY-4043	640-4043
KX250 G1	1989	VY-4043	640-4043
KX250 H1, H2	90-91	VY-4044	640-4044
KX500 E1-E16	89-04	VY-4011	640-4011
KL600B1/B2 KLR600	85-86	VY-4033	640-4033
KL650A1-A19 KLR650	87-05	VY-4033	640-4033
KL650A6F KLR650	2006	VY-4033	640-4033
KL650B2/B3 Tengai KLR650	90-91	VY-4033	640-4033

Suzuki Street

GS450ET/EX/EZ/ED	80-83	VY-3002	640-3002
GS450LT/LX/LZ/LD	80-83	VY-3002	640-3002
GS450LF/LG/LH/LJ	85-88	VY-3002	640-3002
GS450ST/SX	81-82	VY-3002	640-3002
GS450TX/TZ	81-82	VY-3002	640-3002
GS450TX/TZ/TXZ/TXD	82-83	VY-3002	640-3002
GS500EK-EY	89-00	VY-3002	640-3002
GS500EK1/EK2	01-02	VY-3002	640-3002
GS500FK4/FK5/FK6	04-06	VY-3002	640-3002
GS550B/C/EC/N/EN	77-79	VY-3003	640-3003
GS550ET	1980	VY-3003	640-3003
GS550ED/ESD	1983	VY-3009	640-3009
GS550ES3/ESE/EF/ESF/ESG	83-86	VY-3009	640-3009
GS550LN/LT/LX/LZ	79-82	VY-3003	640-3003
GS550LD	1983	VY-3009	640-3009
GS550LF/LG	85-86	VY-3009	640-3009
GS550MZ Katana	1982	VY-3003	640-3003
GS550TX	1981	VY-3003	640-3003
GSF600S T-K3	96-03	VY-3042	640-3042
GSX600F M-K6	91-06	VY-3042	640-3042
GSX750F L	89-06	VY-3042	640-3042
LS650 Boulevard S40	05-06	VY-3035	640-3035
GS700EF/ESF	1985	VY-3007	640-3007
VS700GLFG/GLFH Intruder	86-87	VY-3045	640-3045
VS700GLPG/GLPH Intruder	86-87	VY-3045	640-3045
VS700GLEFG/GLEFH Intruder	86-87	VY-3045	640-3045
VS700GLEPG/GLEPH Intruder	86-87	VY-3045	640-3045
GS750B/C/EC/N/EN	77-79	VY-3004	640-3004
GS750ET/EX/EZ	80-82	VY-3005	640-3005
GS750ED/ESD	1983	VY-3007	640-3007
GS750LN	1979	VY-3004	640-3004
GS750LT/LX	80-81	VY-3005	640-3005
GS750TZ/TD	82-83	VY-3005	640-3005

Suzuki Street

Model	Year	Vesrah Ref	Order No.
GS750SD Katana	1983	VY-3005	640-3005
VS750GLPJ/K/L/M	88-91	VY-3045	640-3045
VS800GLN-GLK4 Intruder	92-04	VY-3045	640-3045
VS800 Boulevard S50	05-06	VY-3045	640-3045
VX800L/M/N/P	90-93	VY-3045	640-3045
GS850GN/GT/GX/GZ/GD	79-83	VY-3004	640-3004
GS850GLT/GLX/GLZ/GLD	80-83	VY-3004	640-3004
GS1000C/EC/N/EN/ET	78-80	VY-3004	640-3004
GS1000GT/GX	80-81	VY-3004	640-3004
GS1000GLT/GLX	80-81	VY-3004	640-3004
GS1000LN	1979	VY-3004	640-3004
GS1000SN/ST	79-80	VY-3004	640-3004
GS1000SZ Katana	1983	VY-3005	640-3005
GS1100ET/EX/EZ	80-82	VY-3005	640-3005
GS1100ED/ESD	1983	VY-3005	640-3005
GS1100GZ/GLZ/GD/GLD	82-83	VY-3004	640-3004
GS1100GKZ/GK2/GKD/GKE	82-84	VY-3004	640-3004
GS1100LT	1980	VY-3005	640-3005
GS1100SD Katana	1983	VY-3005	640-3005
GSX1100G M,N	91-92	VY-3049	640-3049
GSX-R1100 K-N	89-92	VY-3043	640-3043
GS1150ES3/ESE/EF/ESF/EF2	83-85	VY-3005	640-3005
GS1150EG/ESG	1986	VY-3005	640-3005
VS1400GLPH-GLPY Intruder	87-00	VY-3046	640-3046
VS1400GLPK1-GLPK4 Intruder	01-04	VY-3046	640-3046
VS1400 Boulevard S83	05-06	VY-3046	640-3046

Suzuki ATV

LT230SF/SG/SH/SJ Quadsport	85-88	VY-3021	640-3021
LT250EFF/EFG Quadrunner	85-86	VY-3022	640-3022
LT250RH-RN Quadracer	87-92	VY-3041	640-3041
LT250SK/SL Quadsport	89-90	VY-3021	640-3021
LT-4WDH-LT-4WDS Quadrunner	87-95	VY-3027	640-3027
LT-F250J/K/L/M/N/P/R Quadruner	88-94	VY-3027	640-3027
LT300EH/EJ/EK	87-89	VY-3022	640-3022
LT-F4WDXM/N/P King Quad	91-93	VY-3027	640-3027
LT500RJ/RK/RL Quadracer	88-90	VY-3047	640-3047

Suzuki Dual Sport & Offroad

DR250L/M/N/P	90-93	VY-3044	640-3044
DR250SL/SM/SN Dual Sport	90-92	VY-3044	640-3044
DR250SEP/SER/SES Dual Sport	93-95	VY-3048	640-3044
RM250 R,S	94-95	VY-3053	640-3043
DR350L/M/N/P/R/S/T/V/W/X	90-99	VY-3044	640-3044
DR350SL/SM/SN/SP Dual Sport	90-93	VY-3044	640-3044
DR350SER-SEX Dual Sport	94-99	VY-3048	640-3048

Stator Cover Gaskets

Yamaha Street

Model	Year	Vesrah Ref	Order No.
XT250L/LC	1984	VK-2017	641-2017
XT350N/NC-M/MC Dual Sport	85-00	VK-2017	641-2017
XT550J/K Dual Sport	82-83	VK-2011	641-2011
XT600L/LC-W/WC Dual Sport	84-89	VK-2011	641-2011
FZR400U/SUC-A/SAC	88-90	VK-2032	641-2032
FZR600W/WC/A	89-90	VK-2032	641-2032
FZR600RA/RAC-RL/RLC	90-99	VK-2032	641-2032
SRX600S/SC	1986	VK-2011	641-2011
FZ700 T/TC Genesis	87	VK-2024	641-2024
FZ750 N, S/SC	85-86	VK-2024	641-2024
FZ750 U/UC	88	VK-2024	641-2024
FZR750R T, U Genesis	87-88	VK-2024	641-2024
YZR750R F/FC	94	VK-2024	641-2024
YZF750R H/HC, J/JC, K/KC	96-98	VK-2024	641-2024
XV700L/LC/N/NC Virago	84-85	VK-2021	641-2021
XV700CS/CSC/CT/CTC Virago	86-87	VK-2021	641-2021
XV700SS/SSC Virago	1986	VK-2021	641-2021
XV750H/J/K Virago	81-83	VK-2021	641-2021
XV750MK Midnight Virago	1983	VK-2021	641-2021
XV750U/UC-G/GC Virago	88-95	VK-2021	641-2021
XV750H1/HC1/J1/JC1 Virago	96-97	VK-2021	641-2021
XV920J/K Virago	82-83	VK-2021	641-2021
XV920MK Midnight Virago	1983	VK-2021	641-2021
XV920RH/RJ	81-82	VK-2021	641-2021
FZR1000 U/UC- B/BC	88-91	VK-2024	641-2024
FJ1100 L/LC, N/NC	84-85	VK-2023	641-2023
XV1000L/LC/N/NC Virago	84-85	VK-2021	641-2021
XV1100S/SC-L/LC Virago	86-99	VK-2021	641-2021
XV1100SH/SHC-SK/SKC Virago	96-98	VK-2021	641-2021
FJ1200 S/SC, T/TC	86-87	VK-2023	641-2023
FJ1200 W/WC-D/DC	89-92	VK-2023	641-2023
FJ1200A D/DC	92	VK-2023	641-2023

Yamaha ATV

YFM200N Moto-4	1985	VK-2002	641-2002
YFM200DXS/DXT/DXU/DXW Moto-4	86-89	VK-2002	641-2002
YTM200K/L/M Tri-Moto	83-85	VK-2002	641-2002
YTM200EK/EL Tri-Moto	83-84	VK-2002	641-2002
YTM200ERN Tri-Moto	1985	VK-2002	641-2002
YFM225S/T/U Moto-4	86-88	VK-2002	641-2002
YTM225DXK/DXL/DXN Tri-Moto	83-85	VK-2002	641-2002
YTM225DRN/DRS Tri-Moto	85-86	VK-2002	641-2002
YFB250D/E/F/G/H Timberwolf	92-96	VK-2002	641-2002
YFB250FWF-FWM/FWMC	94-00	VK-2002	641-2002
YFB250UH/UJ/UK Timberwolf	96-98	VK-2002	641-2002
YFM350S Raptor	2004	VK-2022	641-2022
YFM350RT/RV Raptor	05-06	VK-2022	641-2022
YFM350RSET/RSEV Raptor 350 SE	05-06	VK-2022	641-2022
YFM350ERT/ERU/ERW/ERA Moto-4	87-90	VK-2022	641-2022
YFM350ERD/ERE/ERF/ERG Moto-4	92-95	VK-2022	641-2022
YFM350FWT-FWJ Big Bear 4WD	87-97	VK-2022	641-2022
YFM350UH/UJ/UK/UL/ULC	96-99	VK-2022	641-2022
YFM350XT-XS/XSC Warrior	87-04	VK-2022	641-2022
YFM400FWG-FWK Kodiak	95-98	VK-2022	641-2022

Yamaha Dual Sport

XT125 J, K/KC	82-83	VK-2003	641-2003
BW200 N Big Wheel	85	VK-2003	641-2003
XT200 J, K.KC	82-83	VK-2003	641-2003
TT225 S,T	86-87	VK-2003	641-2003
XT250L/LC	1984	VK-2017	641-2017
TT350S/T Offroad	86-87	VK-2017	641-2017
XT350N/NC-M/MC Dual Sport	85-00	VK-2017	641-2017
XT550J/K Dual Sport	82-83	VK-2011	641-2011
TT600K/L/N/S Offroad	83-86	VK-2011	641-2011
XT600L/LC-W/WC Dual Sport	84-89	VK-2011	641-2011

Sudco Part Number to OEM Cross Reference
Stator Cover Gaskets

Honda

OEM Reference	Vesrah Ref	Order No.
11343-ML7-000	VK-1077	641-1077
11343-MY7-000	VK-1077	641-1077
11343-MZ5-000	VK-1079	641-1079
11343-MZ7-000	VK-1077	641-1077
11392-MV9-670	VK-1081	641-1081
11394-KN4-750	VK-1019	641-1019
11394-149-000	VK-1019	641-1019
11395-HA0-000	VK-1034	641-1034
11395-HC0-680	VK-1060	641-1060
11395-HC0-000	VK-1060	641-1060
11395-HC5-740	VK-1034	641-1034
11395-HM3-670	VK-1087	641-1087
11395-KCY-671	VK-1088	641-1088
11395-KW3-880	VK-1086	641-1086
11395-MG2-000	VK-1028	641-1028
11395-MH1-700	VK-1028	641-1028
11395-MN1-700	VK-1028	641-1028
11395-MY2-620	VK-1070	641-1070
11395-283-306	VY-1002	640-1002
11395-283-000	VY-1002	640-1002
11395-425-306	VK-1009	641-1009
11395-425-000	VK-1009	641-1009
11397-300-306	VY-1001	640-1001
11397-300-040	VY-1001	640-1001
11691-286-306	VY-1004	640-1004
11691-286-000	VY-1004	640-1004
11691-333-306	VY-1003	640-1003
11691-333-000	VY-1003	640-1003

Kawasaki

11009-1055	VY-4014	640-4014
11009-1090	VY-4027	640-4027
11009-1165	VY-4017	640-4017
11009-1319	VY-4004	640-4004
11009-1328	VY-4018	640-4018
11009-1481	VY-4033	640-4033
11009-1486	VY-4031	640-4031
11009-1502	VY-4028	640-4028
11009-1519	VY-4029	640-4029
11009-1590	VY-4034	640-4034
11009-1672	VY-4036	640-4036
11009-1745	VY-4037	640-4037
11009-1834	VY-4031	640-4031
11009-1987	VY-4017	640-4017
11060-1055	VY-4014	640-4014
11060-1075	VY-4001	640-4001
11060-1150	VY-4028	640-4028
11060-1226	VY-4029	640-4029
11060-1239	VY-4034	640-4034
11060-1417	VY-4027	640-4027
11060-1421	VY-4018	640-4018
11060-1571	VY-4004	640-4004
11060-1649	VY-4036	640-4036
11060-1656	VY-4049	640-4049
11060-1693	VY-4033	640-4033
11060-1716	VY-4037	640-4037
14045-014	VY-4001	640-4001

Sudco Part Number to OEM Cross Reference
Stator Cover Gaskets

Suzuki

OEM Reference	Vesrah Ref	Order No.
11483-01C00	VY-3041	640-3041
11483-01C10	VY-3041	640-3041
11483-14D01	VY-3044	640-3044
11483-14D03	VY-3044	640-3044
11483-15D01	VY-3048	640-3048
11483-15D02	VY-3048	640-3048
11483-19B00	VY-3027	640-3027
11483-19B13	VY-3027	640-3027
11483-22A10	VY-3021	640-3021
11483-22A00	VY-3021	640-3021
11483-24B01-H17	VY-3035	640-3035
11483-24B00	VY-3035	640-3035
11483-24502-H17	VY-3022	640-3022
11483-24502	VY-3022	640-3022
11483-31301-H17	VY-3007	640-3007
11483-31301	VY-3007	640-3007
11483-38A00	VY-3045	640-3045
11483-38B00-H17	VY-3046	640-3046
11483-38B10	VY-3046	640-3046
11483-38B00	VY-3046	640-3046
11483-41F00	VY-3045	640-3045
11483-43BV0	VY-3047	640-3047
11483-43B00	VY-3047	640-3047
11483-43400-H17	VY-3009	640-3009
11483-43400-	VY-3009	640-3009
11483-44110	VY-3002	640-3002
11483-44100	VY-3002	640-3002
11483-45000-H17	VY-3004	640-3004
11483-47000-H17	VY-3003	640-3003
11483-47000	VY-3003	640-3003
11483-49200-H17	VY-3005	640-3005

Yamaha

1UY-15451-00-00	VK-2022	641-2022
1WG-15451-10-00	VK-2032	641-2032
1WG-15451-00-00	VK-2032	641-2032
24W-15451-00-00	VK-2002	641-2002
3EG-15451-00-00	VK-2021	641-2021
3GD-15451-00-00	VK-2022	641-2022
3SW-15451-00-00	VK-2011	641-2011
3Y1-15451-10-00	VK-2011	641-2011
3Y1-15451-00-00	VK-2011	641-2011
30X-15451-00-00	VK-2017	641-2017
4BD-15451-00-00	VK-2002	641-2002
4EL-15451-00-00	VK-2017	641-2017
4X7-15451-00-00	VK-2021	641-2021

Left Crankcase Cover Gaskets (Generator & Ignition)

Left Side Crankcase Cover Gaskets (Generator & Ignition)

Applications with magneto, rotor, pulse, source and lighting coils.
Sold each. ***Made in Japan.***

Honda ATV

Model	Year	Vesrah Ref	Order No.
ATC250R	81-84	VK-1031	641-1031
ATC250R	85-86	VK-1033	641-1033
TRX250R	86-89	VK-1033	641-1033

Honda Offroad

CR80R	85-02	VK-1055	641-1055
CR80RB	00-02	VK-1055	641-1055
CR85R	03-06	VK-1055	641-1055
CR85RB	03-06	VK-1055	641-1055
CR250R	85-01	VK-1053	641-1053
CR500R	87-01	VK-1062	641-1062

Kawasaki Offroad

KX60A1/A2	83-84	VY-4010	640-4010
KX60B1-B19	85-03	VY-4010	640-4010
KX65A1/A2/A3/A4/A5/A6/A6F	00-06	VY-4010	640-4010
KDX80B2/B3	82-83	VY-4010	640-4010
KDX80C1/C2/C3/C4/C5	84-88	VY-4010	640-4010
KX80C1/C2	81-82	VY-4010	640-4010
KX80E1/E2/E3	83-85	VY-4010	640-4010
KX80G1/G2	86-87	VY-4025	640-4025
KX80J2	1987	VY-4025	640-4025
KX80L1/L2	88-89	VY-4025	640-4025
KX80L3	1990	VY-4051	640-4051
KX80N1/N2	88 89	VY-4025	640-4025
KX80N3	1990	VY-4051	640-4051
KX80R1/R2/R3/R4/R5/R6/R7	91-97	VY-4051	640-4051
KX80T1/T2/T3/T4	91-94	VY-4051	640-4051
KX80W1/W2/W3	98-00	VY-4051	640-4051
KX85A1/A2/A3/A4/A5	01-05	VY-4051	640-4051
KX85A6F	2006	VY-4051	640-4051
KX100B5/B6/B7	95-97	VY-4051	640-4051
KX100C1/C2/C3	98-00	VY-4051	640-4051
KX100D1/D2/D3/D4/D5	01-05	VY-4051	640-4051
KX100D6F	2006	VY-4051	640-4051
KX125F1/G1	88-89	VY-4039	640-4039
KX125H1/H2	90-91	VY-4039	640-4039
KX125K1/K2/K3/K4/K5	94-98	VY-4047	640-4047
KX125L1/L2/L3/L4	99-02	VY-4047	640-4047
KX250C1/C2	83-84	VY-4004	640-4004
KX250D1/D2	85-86	VY-4004	640-4004
KX250E1	1987	VY-4043	640-4043
KX250F1/G1	88-89	VY-4043	640-4043
KX250H1/H2/J1/J2	90-91	VY-4044	640-4044
KX250K1/K2/K3/K4/K5	94-98	VY-4048	640-4048
KX250L1/L2/L3/L4	99-02	VY-4048	640-4048
KX250M1/M2	03-04	VY-4048	640-4048
KX500E1-E16	89-04	VY-4011	640-4011

Suzuki Offroad

Model	Year	Vesrah Ref	Order No.
RM60K3	2003	VY-4010	640-4010
RM65K3/K4/K5	03-05	VY-4010	640-4010
RM80L-K1	90-01	VY-3037	640-3037
RM250K/L/M/N/P	89-93	VY-3040	640-3040
RM250R/S	94-95	VY-3053	640-3053
RMX250L/M/N/P/R/S/T	89-96	VY-3040	640-3040

Yamaha Dual Sport & Offroad

YZ80E1/F1/G1/H1/J1/K1/L/M1/N1	93-01	VK-2038	641-2038
DT100E/F/G/H/J/K	78-83	VK-2010	641-2010
MX100F/G/H/J/K	79-83	VK-2010	641-2010
RT100A	1990	VK-2010	641-2010
RT100D/E/F/G/H/J/K/L/M/MC	92-00	VK-2010	641-2010
XT125J/K/KC Dual Sport	82-83	VK-2003	641-2003
YZ125F1/G1/H1/J1/K1/L1/M1/N1	94-01	VK-2034	641-2034
BW200N/S	85-86	VK-2003	641-2003
BW200ES/ET/EU	86-88	VK-2003	641-2003
XT200J/K/KC Dual Sport	82-83	VK-2003	641-2003
TT225S/T	86-87	VK-2003	641-2003
XT225D/DC-H/HC Serow	92-96	VK-2003	641-2003
WR250ZB/ZD/ZE/ZF/ZG	91-95	VK-2026	641-2026
WR250ZH/ZJ	96-97	VK-2035	641-2035
YZ250WRW/WRA	89-90	VK-2026	641-2026
YZ250U/W/A/B/D/E/F	88-94	VK-2026	641-2026
YZ250H1/J1/K1	96-98	VK-2035	641-2035
WR400FK/FL/FM	98-00	VK-2003	641-2003
YZ400FK/FL	98-99	VK-2003	641-2003
WR426FN/FP	01-02	VK-2003	641-2003
YZ426FM/FN/FP	00-02	VK-2003	641-2003

Sudco Part Number to OEM Cross Reference
Left Crankcase Cover Gaskets (Generator & Ignition)

Honda

OEM Reference	Vesrah Ref	Order No.
11342-GC4-710	VK-1055	641-1055
11352-HA2-306	VK-1033	641-1033
11352-HA2-000	VK-1033	641-1033
11352-KA4-771	VK-1053	641-1053
11352-KA4-770	VK-1053	641-1053
11352-KA5-690	VK-1062	641-1062
11395-961-306	VK-1031	641-1031
11395-961-000	VK-1031	641-1031

Kawasaki

11009-1201	VY-4010	640-4010
11009-1289	VY-4011	640-4011
11009-1319	VY-4004	640-4004
11009-1458	VY-4043	640-4043
11009-1536	VY-4025	640-4025
11009-1626	VY-4043	640-4043
11009-1695	VY-4039	640-4039
11009-1807	VY-4051	640-4051

Left Crankcase Cover Gaskets (Generator & Ignition)

LH Gear Cover (Crankcase) Gaskets

Left side engine gear cover gasket for Suzuki sportbike applications. Sold each. ***Made in Japan.***

Suzuki

Model	Year	Vesrah Ref	Order No.
GSF600ST-SK3 Bandit	96-03	VY-3042	640-3042
GSX600FJ/FK/FL Katana	88-90	VY-3026	640-3026
GSX600FM-FK6 Katana	91-06	VY-3042	640-3042
GSX750FK-FK6 Katana	89-06	VY-3042	640-3042
GSX-R750G/H	86-87	VY-3026	640-3026
GSX-R750J/K/L/M/N	88-92	VY-3042	640-3042
GSX-R750RG	1986	VY-3026	640-3026
GSX1100GM/GN/GP Shaft	91-93	VY-3049	640-3049
GSX-R1100G/H/J	86-88	VY-3026	640-3026
GSX-R1100K/L/M/N	89-92	VY-3043	640-3043
GSF1200SV/SAV/SW/SX/SY Bandit	97-00	VY-3043	640-3043
GSF1200SK1/SK2/SK3 Bandit	01-03	VY-3043	640-3043
GSF1200SK4/SK5 Bandit	04-05	VY-3043	640-3043

Sudco Part Number to OEM Cross Reference
Suzuki LH Gear Cover (Crankcase) Gaskets)

Suzuki

OEM Reference	Vesrah Ref	Order No.
11483-26D00	VY-3049	640-3049
11483-27A00	VY-3026	640-3026
11483-27A20	VY-3042	640-3042
11483-27A10	VY-3042	640-3042
11483-27A01	VY-3042	640-3042
11483-48B21	VY-3043	640-3043
11483-48B00	VY-3043	640-3043

Sudco Part Number to OEM Cross Reference
Left Crankcase Cover Gaskets (Generator & Ignition)

Kawasaki

OEM Reference	Vesrah Ref	Order No.
11009-1951	VY-4044	640-4044
11009-1964	VY-4011	640-4011
11009-1966	VY-4039	640-4039
11009-1973	VY-4051	640-4051
11009-1974	VY-4010	640-4010
11060-1189	VY-4047	640-4047
11060-1192	VY-4044	640-4044
11060-1352	VY-4048	640-4048
11060-1571	VY-4004	640-4004

Suzuki

11483-02B50	VY-3037	640-3037
11483-28C01	VY-3040	640-3040
11483-28C00	VY-3040	640-3040
11483-28E10	VY-3053	640-3053
K1100-91974	VY-4010	640-4010

Engine Sprocket (Crankcase) Cover Gasket

Left side engine sprocket cover gasket for Yamaha sportbike applications. ***Made in Japan.*** Sold each.

Honda

Model	Year	Vesrah Ref	Order No.
VFR750F	90-97	VK-1077	641-1077
VF750C Magna	94-03	VK1079	641-1079
VF750CD Magna Deluxe	95-96	VK1079	641-1079
VF750C2 Magna Deluxe	97-00	VK1079	641-1079

Yamaha

FZ700T/TC	1987	VK-2024	641-2024
FZX700S/SC/T'TC	86-87	VK-2024	641-2024
FZ750N/S/SC	85-86	VK-2024	641-2024
FZ750U/UC	1988	VK-2024	641-2024
FZR750RT/RU	87-88	VK-2024	641-2024
YZF750RF/RFC	1994	VK-2024	641-2024
YZF750RH/RHC/RJ/RJC/RK/RKC	96-98	VK-2024	641-2024
FZR1000T/TC-G/GC	87-95	VK-2024	641-2024
GTS1000AE/AEC/AD/ADC	93-94	VK-2024	641-2024
YZF1000RJ/RJC	1997	VK-2024	641-2024
FJ1100L/LC/N/NC	84-85	VK-2023	641-2023
FJ1200S/SC/T/TC	86-87	VK-2023	641-2023
FJ1200W/WC/A/AC/B/BC/D/DC	89-92	VK-2023	641-2023
FJ1200AD/ADC/AE/AEC (ABS)	92-93	VK-2023	641-2023

Sudco Part Number to OEM Cross Reference
Engine Sprocket (Crankcase) Cover Gasket

Honda

OEM Reference	Vesrah Ref	Order No.
11343-MY7-000	VK-1077	641-1077
11343-MZ5-000	VK-1079	641-1079

Yamaha

1AE-15451-00-00	VK-2024	641-2024
36Y-15451-00-00	VK-2023	641-2023
4BH-15451-00-00	VK-2024	641-2024
4CR-15451-00-00	VK-2023	641-2023
4FM-15451-00-00	VK-2024	641-2024

Sudco Part Number to OEM Cross Reference
Left Crankcase Cover Gaskets (Generator & Ignition)

Yamaha

OEM Reference	Vesrah Ref	Order No.
1X0-15455-00-00	VK-2010	641-2010
2VM-15451-00-00	VK-2026	641-2026
2VM-15451-11-00	VK-2035	641-2035
2VM-15451-10-00	VK-2035	641-2035
3UL-15455-00-00	VK-2010	641-2010
4JY-15451-01-00	VK-2034	641-2034
4JY-15451-00-00	VK-2034	641-2034
4ES-15455-00-00	VK-2038	641-2038
5BE-15451-00-00	VK-2003	641-2003
15A-15451-02-00	VK-2003	641-2003
15A-15451-00-00	VK-2003	641-2003

Clutch Cover Gaskets

Clutch Cover Gaskets

Made in Japan. Sold each

Honda Street

Model	Year	Vesrah Ref	Order No.
CB125S	81-82	VL-1016	643-1016
CB350F/F1 Super Sport	72-74	VL-1014	643-1014
CB350G	1973	VL-1013	643-1013
CB350/K1-K4 Super Sport	68-73	VL-1013	643-1013
CL350/K1-K5 Scrambler	68-73	VL-1013	643-1013
SL350K0/K1/K2 Motosport	70-72	VL-1013	643-1013
CB400F Super Sport	75-77	VL-1008	643-1008
FT500 Ascot	82-83	VL-1041	643-1041
VF500C V30 Magna	84-85	VL-1049	643-1049
VF500F V30 Interceptor	84-85	VL-1049	643-1049
CBR600F Hurricane	87-90	VL-1070	643-1070
CBR600F2 Hurricane	91-94	VL-1083	643-1083
CBR600F3 Hurricane	95-98	VL-1083	643-1083
CBR600SE	1998	VL-1083	643-1083
CBR600SJR Replica	1996	VL-1083	643-1083
VT600C Shadow VLX	88-89	VL-1071	643-1071
VT600C Shadow VLX	91-97	VL-1071	643-1071
VT600C Shadow	99-04	VL-1071	643-1071
VT600CD Shadow VLX Deluxe	93-98	VL-1071	643-1071
VT600CD Shadow Deluxe	99-04	VL-1071	643-1071
VT600CD2 Shadow Deluxe	99-00	VL-1071	643-1071
NT650 Hawk GT	88-91	VL-1071	643-1071
NX650	88-89	VL-1028	643-1028
CB700SC Nighthawk	84-86	VL-1050	643-1050
VF700F Interceptor	84-85	VL-1021	643-1021
VF700S Sabre	84-85	VL-1021	643-1021
VFR700F/F2 Interceptor	86-87	VL-1064	643-1064
VT700C Shadow	84-87	VL-1040	643-1040
CB750 Nighthawk 750	91-93	VL-1050	643-1050
CB750 Nighthawk 750	95-03	VL-1050	643-1050
CB750A Automatic	76-78	VL-1001	643-1001
CB750C Custom	80-82	VL-1002	643-1002
CB750F Super Sport	75-78	VL-1001	643-1001
CB750F Super Sport	79-82	VL-1002	643-1002
CB750K0/K1-K5 750 Four	69-75	VL-1001	643-1001
CB750K 750 Four	76-78	VL-1001	643-1001
CB750K	79-82	VL-1002	643-1002
CB750L LTD	1979	VL-1002	643-1002
CB750SC Nighthawk	82-83	VL-1002	643-1002
VF750C V45 Magna	82-83	VL-1021	643-1021
VF750C V45 Magna	1988	VL-1021	643-1021
VF750C Magna	94-03	VL-1064	643-1064
VF750CD Magna Deluxe	95-96	VL-1064	643-1064
VF750C2 Magna Deluxe	97-00	VL-1064	643-1064
VF750F V45 Interceptor	83-84	VL-1021	643-1021
VF750S V45 Sabre	82-83	VL-1021	643-1021
VFR750R	90-97	VL-1064	643-1064
VFR750R (RC30)	1990	VL-1064	643-1064
VT750C Shadow	98-00	VL-1071	643-1071
VT750CD Shadow Deluxe	98-01	VL-1071	643-1071
VT750CD2 Shadow Deluxe	98-01	VL-1071	643-1071

Honda Street

Model	Year	Vesrah Ref	Order No.
PC800 Pacific Coast	89-90	VL-1040	643-1040
PC800 Pacific Coast	94-98	VL-1040	643-1040
VT800C Shadow	1988	VL-1040	643-1040
CB900C Custom	80-82	VL-1002	643-1002
CB900F Super Sport	81-82	VL-1002	643-1002
CB900F (919)	02-05	VL-1083	643-1083
CBR900RR	93-99	VL-1083	643-1083
CB1000C Custom	1983	VL-1002	643-1002
CBR1000F Hurricane	87-88	VL-1077	643-1077
CBR1000F Hurricane	90-91	VL-1077	643-1077
GL1000 Goldwing	75-79	VL-1039	643-1039
GL1000L Goldwing LTD	1976	VL-1039	643-1039
VF1000F Interceptor	1984	VL-1021	643-1021
VF1000R	85-86	VL-1021	643-1021
CB1100F Super Sport	1983	VL-1002	643-1002
GL1100 Goldwing	80-83	VL-1032	643-1032
GL1100A Goldwing Aspencade	82-83	VL-1032	643-1032
GL1100I Goldwing Interstate	80-83	VL-1032	643-1032
ST1100	91-02	VL-1090	643-1090
ST1100A (ABS)	92-02	VL-1090	643-1090
VF1100C V65 Magna	83-86	VL-1058	643-1058
VF1100S V65 Sabre	84-85	VL-1058	643-1058
VT1100C Shadow	85-90	VL-1060	643-1060
GL1200 Goldwing	1984	VL-1066	643-1066
GL1200A Goldwing Aspencade	84-87	VL-1066	643-1066
GL1200I Goldwing Interstate	84-87	VL-1066	643-1066
GL1200L Goldwing LTD	1985	VL-1066	643-1066
GL1200SEi Goldwing	1986	VL-1066	643-1066
GL1500 Goldwing	88-90	VL-1081	643-1081
GL1500A Goldwing Aspencade	91-00	VL-1081	643-1081
GL1500C Valkyrie	97-00	VL-1081	643-1081
GL1500C Valkyrie	2003	VL-1081	643-1081
GL1500CD Valkyrie	01-03	VL-1081	643-1081
GL1500CF Valkyrie Interstate	99-01	VL-1081	643-1081
GL1500CT Valkyrie Tourer	97-00	VL-1081	643-1081
GL1500I Goldwing Interstate	91-96	VL-1081	643-1081
GL1500SE Goldwing SE	90-00	VL-1081	643-1081

Honda ATV

ATC110	81-85	VL-1023	643-1023
ATC125M	84-85	VL-1023	643-1023
TRX125 Fourtrax	85-86	VL-1023	643-1023
ATC185	1980	VL-1016	643-1016
ATC185S	81-83	VL-1016	643-1016
ATC200	81-83	VL-1016	643-1016
ATC200E Big Red	82-83	VL-1016	643-1016
ATC200ES Big Red	1984	VL-1016	643-1016
ATC200M	84-85	VL-1016	643-1016
ATC200S	84-86	VL-1016	643-1016
ATC200X	83-85	VL-1016	643-1016
ATC200X	86-87	VL-1059	643-1059
TRX200 Fourtrax 200	1984	VL-1016	643-1016
ATC250R	85-86	VL-1030	643-1030
TRX250R Fourtrax 250R	86-89	VL-1030	643-1030
TRX300 Four Trax 300	88-00	VL-1072	643-1072
TRX300EX Four Trax 300EX	93-00	VL-1087	643-1087
TRX300EX Sportrax 300EX	01-08	VL-1087	643-1087
TRX300FW Four Trax 300 4x4	1988	VL-1072	643-1072
TRX300FW Four Trax 300 4x4	90-00	VL-1072	643-1072
TRX400EX Fourtrax 400EX	99-00	VL-1088	643-1088
TRX400EX Sportrax 400EX	01-07	VL-1088	643-1088

Honda Dual Sport & Offroad

Model	Year	Vesrah Ref	Order No.
CRF50F	04-08	VL-1020	643-1020
XR50R	00-03	VL-1020	643-1020
CRF70F	04-08	VL-1020	643-1020
XL70K0/K1	74-75	VL-1020	643-1020
XL70	1976	VL-1020	643-1020
XL75	77-79	VL-1026	643-1026
XR75	77-78	VL-1026	643-1026
CR80R	84-85	VL-1037	643-1037
CR80R	86-02	VL-1053	643-1053
CR80RB	00-02	VL-1053	643-1053
CRF80F	04-08	VL-1026	643-1026
XL80S	80-85	VL-1026	643-1026
XR80	79-84	VL-1026	643-1026
XR80R	85-88	VL-1026	643-1026
XR80R	90-91	VL-1026	643-1026
XR80R	93-03	VL-1026	643-1026
CR85R	03-07	VL-1053	641-1053
CR85RB	03-07	VL-1053	641-1053
CRF100F	04-08	VL-1026	643-1026
XL100K0/K1	74-75	VL-1018	643-1018
XL100	76-78	VL-1018	643-1018
XL100S	79-85	VL-1026	643-1026
XR100	81-84	VL-1026	643-1026
XR100R	85-03	VL-1026	643-1026
CT110 Trail 110	80-84	VL-1023	643-1023
CT110 Trail 110	1986	VL-1023	643-1023
CR125R	84-86	VL-1043	643-1043
CR125R	90-99	VL-1074	643-1074
XL125S	79-82	VL-1016	643-1016
XL125S	1984	VL-1016	643-1016
XL185S	79-83	VL-1016	643-1016
XR185	1979	VL-1016	643-1016
TLR200 Reflex	86-87	VL-1016	643-1016
TR200 Fatcat	86-87	VL-1059	643-1059
XL200R	83-84	VL-1016	643-1016
XR200	80-84	VL-1016	643-1016
XR200R	81-88	VL-1016	643-1016
XR200R	90-91	VL-1078	643-1078
XR200R	94-02	VL-1078	643-1078
CR250R	85-87	VL-1046	643-1046
CR250R	92-01	VL-1085	643-1085
XL250R	82-83	VL-1009	643-1009
XL250R	84-87	VL-1047	643-1047
XL250S	79-81	VL-1009	643-1009
XR250L	91-96	VL-1047	643-1047
XR250R	81-82	VL-1009	643-1009
XR250R	84-94	VL-1047	643-1047
XR250R	96-04	VL-1086	643-1086
SL350K0/K1/K2 Motosport	70-72	VL-1013	643-1013
XR400R	96-04	VL-1088	643-1088
CR500R	85-01	VL-1054	643-1054
XL500S	79-81	VL-1009	643-1009
XL500R	1982	VL-1009	643-1009
XR500	79-80	VL-1009	643-1009
XR500R	81-82	VL-1009	643-1009
XR500R	83-84	VL-1028	643-1028
XL600R	83-87	VL-1028	643-1028
XR600R	85-00	VL-1028	643-1028
NX650	88-89	VL-1028	643-1028
XR650L	93-08	VL-1028	643-1028

Kawasaki Street

KZ400B1/B2	78-79	VL-4025	643-4025
KZ400C1	1978	VL-4025	643-4025
KZ400H1 LTD	1979	VL-4025	643-4025
KZ440A1/A2/A3/A4 LTD	80-83	VL-4025	643-4025
KZ440B1/B2	80-81	VL-4025	643-4025
KZ440D1/D2/D3/D4/D5 LTD Belt	80-83	VL-4025	643-4025

Kawasaki Street

Model	Year	Vesrah Ref	Order No.
KZ440G1 Belt	1982	VL-4025	643-4025
EN450A1-A6 LTD 454	85-90	VL-4039	643-4039
EN500A1-A7 Vulcan 500	90-96	VL-4039	643-4039
EN500C1-C10 Vulcan 500 LTD	96-05	VL-4039	643-4039
EN500C6F/C7F/C8F Vulcan 500 LTD	06-08	VL-4039	643-4039
EX500A1-A7	87-93	VL-4039	643-4039
EX500D1/D2/D3 Ninja 500	94-96	VL-4039	643-4039
EX500D4-D12 Ninja 500R	97-05	VL-4039	643-4039
EX500D6F/D7F/D8F Ninja 500R	06-08	VL-4039	643-4039
KZ550A1/A2/A3/A4	80-83	VL-4024	643-4024
KZ550C1/C2/C3/C4 LTD	80-83	VL-4024	643-4024
KZ550D1 GPz	1981	VL-4024	643-4024
KZ550F1 Spectre	1983	VL-4024	643-4024
KZ550F2 LTD	1984	VL-4024	643-4024
KZ550H1/H2 GPz	82-83	VL-4024	643-4024
KZ550M1 LTD	1983	VL-4024	643-4024
ZR550B1/B2/B3/B4 Zephyr	90-93	VL-4024	643-4024
ZX550A1/A2/A3 GPz	84-86	VL-4024	643-4024
KL600A1 KLR600	1984	VL-4013	643-4013
KL600B1/B2 KLR600	85-86	VL-4013	643-4013
ZL600A1/A2 Eliminator	86-87	VL-4035	643-4035
ZL600B2/B3 Eliminator	96-97	VL-4035	643-4035
ZX600A1/A2/A3 Ninja 600R	85-87	VL-4035	643-4035
ZX600B1 Ninja 600RX	1987	VL-4035	643-4035
ZX600C1-C10 Ninja 600R	88-97	VL-4035	643-4035
KL650A1-A19 KLR650	87-05	VL-4013	643-4013
KL650A6F/A7F KLR650	06-07	VL-4013	643-4013
KL650B2/B3 Tengai KLR650	90-91	VL-4013	643-4013
KZ650B1/B2/B2A/B3	77-79	VL-4005	643-4005
KZ650C1/C2/C3 Custom	77-79	VL-4005	643-4005
KZ650D1/D1A/D2 SR	78-79	VL-4005	643-4005
KZ650E1 LTD	1980	VL-4005	643-4005
KZ650F1	1980	VL-4005	643-4005
KZ650H1/H2/H3 CSR	81-83	VL-4005	643-4005
KZ700A1	1984	VL-4005	643-4005
ZN700A1/A2 LTD	84-85	VL-4005	643-4005
KZ750B1/B2/B3/B4 2-cylinder	76-79	VL-4002	643-4002
KZ750E1/E2/E3	80-82	VL-4005	643-4005
KZ750F1/F2 Spectre & LTD	83-84	VL-4005	643-4005
KZ750G1 LTD 2-cylinder	1980	VL-4002	643-4002
KZ750H1/H2/H3/H4 LTD	80-83	VL-4005	643-4005
KZ750K1/K2 2-cylinder	83-84	VL-4002	643-4002
KZ750L3	1983	VL-4005	643-4005
KZ750M1 CSR 2-cylinder	1983	VL-4002	643-4002
KZ750N1/N2 Spectre	82-83	VL-4005	643-4005
KZ750R1 GPz	1982	VL-4005	643-4005
ZX750A1/A2/A3 GPz	83-85	VL-4005	643-4005
ZX750E1/E2 GPz Turbo	84-85	VL-4005	643-4005
KZ900A4/A5	76-77	VL-4001	643-4001
KZ900B1 LTD	1976	VL-4001	643-4001
Z1/Z1A/Z1B-900	73-75	VL-4001	643-4001
ZL900A1/A2 Eliminator	85-86	VL-4014	643-4014
ZX900A1/A2/A3 Ninja 900R	84-86	VL-4014	643-4014
KZ1000A1/A2	77-78	VL-4001	643-4001
KZ1000A3/A3A/A4 MKII	79-80	VL-4001	643-4001
KZ1000B1/B2/B3/B4 LTD	77-80	VL-4001	643-4001
KZ1000C1/C1A/C2/C3/C4 Police	78-81	VL-4001	643-4001
KZ1000D1 Z1R	1978	VL-4001	643-4001
KZ1000D3 Z1R	1980	VL-4001	643-4001
KZ1000E1/E2 Shaft ST	79-80	VL-4001	643-4001
KZ1000G1 Classic LTD	1980	VL-4001	643-4001
KZ1000J1/J2/J3	81-83	VL-4004	643-4004
KZ1000K1/K2 LTD	81-82	VL-4004	643-4004
KZ1000M1/M2 CSR	81-82	VL-4004	643-4004
KZ1000P1-P21 Police	82-02	VL-4004	643-4004
KZ1000R1/R2 Replica	82-83	VL-4004	643-4004
ZG1000A1-A14 Concours	86-99	VL-4014	643-4014
ZG1000A15-20 Concours	00-05	VL-4054	643-4054
ZG1000A6F Concours	2006	VL-4054	643-4054

Clutch Cover Gaskets

Kawasaki Street

Model	Year	Vesrah Ref	Order No.
ZL1000A1 Eliminator	1987	VL-4014	643-4014
ZX1000A1/A2 Ninja 1000R	86-87	VL-4014	643-4014
ZX1000B1/B2/B3 Ninja ZX-10	88-90	VL-4014	643-4014
KZ1100A1/A2/A3 Shaft	81-83	VL-4004	643-4004
KZ1100B1/B2 GPz	81-82	VL-4004	643-4004
KZ1100D1/D2 Spectre	82-83	VL-4004	643-4004
KZ1100L1 LTD	1983	VL-4004	643-4004
ZN1100B1/B2 LTD	84-85	VL-4004	643-4004
ZR1100C3/C4 ZRX1100	99-00	VL-4014	643-4014
ZX1100A1/A2 GPz	83-84	VL-4004	643-4004
ZX1100C1/C2/C3/C4 Ninja ZX-11	90-93	VL-4014	643-4014
ZX1100D1-D9 Ninja ZX-11	93-01	VL-4014	643-4014
ZX1100E1/E2/E3 GPz	95-97	VL-4014	643-4014
ZX1100F1 GPz (ABS)	1996	VL-4014	643-4014
ZG1200A1 Voyager XII	1986	VL-4051	643-4051
ZG1200B1-B17 Voyager XII	87-03	VL-4051	643-4051
ZR1200A1/A2/A3/A4/A5 ZRX1200	01-05	VL-4054	643-4054
ZX1200C1/C2/C3/C4 ZZR1200	02-05	VL-4054	643-4054

Kawasaki ATV

KLF220A1-A15 Bayou 220	88-02	VL-4042	643-4042
KLF250A1/A2/A3/A6F/A7F Bayou	03-07	VL-4042	643-4042
KSF250A1-A17 Mojave	87-03	VL-4040	643-4040
KSF250A18 KFX250 Mojave	2004	VL-4040	643-4040
KXT250A1/A2 Tecate 3	84-85	VL-4012	643-4012
KXT250B1/B2 Tecate 3	86-87	VL-4030	643-4030
KEF300A1-A6 Lakota 300	95-00	VL-4036	643-4036
KEF300B1/B2/B3 Lakota Sport	01-03	VL-4036	643-4036
KLF300A1/A2 Bayou 300	86-87	VL-4036	643-4036
KLF300B1-B17 Bayou 300	88-04	VL-4036	643-4036
KLF300C1-C16 Bayou 300 4x4	89-04	VL-4043	643-4043

Kawasaki Dual Sport & Offroad

KX60A1/A2	83-84	VL-4020	643-4020
KX60B1-B19	85-03	VL-4020	643-4020
KDX80B2/B3	82-83	VL-4020	643-4020
KDX80C1/C2/C3/C4/C5	84-88	VL-4020	643-4020
KX80C1/C2	81-82	VL-4020	643-4020
KX80E1/E2/E3	83-85	VL-4020	643-4020
KX80G1/G2	86-87	VL-4032	643-4032
KX80J2	1987	VL-4032	643-4032
KX80L1/L2/L3	88-90	VL-4032	643-4032
KX80N1/N2/N3	88 90	VL-4032	643-4032
KX80R1/R2/R3/R4/R5/R6/R7	91-97	VL-4032	643-4032
KX80T1/T2/T3/T4	91-94	VL-4032	643-4032
KX80W1/W2/W3 **(inner)**	98-00	VL-4032	643-4032
KX85A1/A2/A3/A4/A5 **(inner)**	01-05	VL-4032	643-4032
KX85A6F/A7F **(inner)**	06-07	VL-4032	643-4032
KX100B5/B6/B7	95-97	VL-4032	643-4032
KX100C1/C2/C3 **(inner)**	98-00	VL-4032	643-4032
KX100D1/D2/D3/D4/D5 **(inner)**	01-05	VL-4032	643-4032
KX100D6F/D7F **(inner)**	06-07	VL-4032	643-4032
KX125F1/G1	88-89	VL-4046	643-4046
KX125H1/H2	90-91	VL-4046	643-4046
KX125K1/K2/K3/K4/K5 **(inner)**	94-98	VL-4055	643-4055
KX125L1/L2/L3/L4 **(inner)**	99-02	VL-4055	643-4055
KDX200C1/C2/C3	86-88	VL-4037	643-4037
KDX200H1-H11	95-05	VL-4037	643-4037
KDX200H6F	2006	VL-4037	643-4037
KDX220A4-A12	97-05	VL-4037	643-4037
KX250D1/D2	85-86	VL-4030	643-4030
KX250E1/F1/G1/H1/H2 **(inner)**	87-91	VL-4049	643-4049
KX250K1/K2/K3/K4/K5 **(inner)**	94-98	VL-4056	643-4056
KX250K1/K2/K3/K4/K5 **(outer)**	94-98	VL-4057	643-4057
KX250L1/L2/L3/L4 **(inner)**	99-02	VL-4056	643-4056
KX250L1/L2/L3/L4 **(outer)**	99-02	VL-4057	643-4057
KX250M1/M2 **(inner)**	03-04	VL-4056	643-4056
KX250M1/M2 **(outer)**	03-04	VL-4057	643-4057

Kawasaki Dual Sport & Offroad

Model	Year	Vesrah Ref	Order No.
KX500B1/C1/D1	86-88	VL-4034	643-4034
KX500E1-E16	89-04	VL-4034	643-4034
KL600A1 KLR600	1984	VL-4013	643-4013
KL600B1/B2 KLR600	85-86	VL-4013	643-4013
KL650A10-A19 KLR650	87-05	VL-4013	643-4013
KL650A6F/A7F KLR650	06-07	VL-4013	643-4013
KL650B2/B3 Tengai KLR650	90-91	VL-4013	643-4013

Suzuki Street

GS450ET/EX/EZ/ED	80-83	VL-3006	643-3006
GS450LT/LX/LZ/LD	80-83	VL-3006	643-3006
GS450LF/LG/LH/LJ	85-88	VL-3006	643-3006
GS450ST/SX	80-81	VL-3006	643-3006
GS450TX/TZ	81-82	VL-3006	643-3006
GS450TX/TZ/TXZ/TXD	81-83	VL-3006	643-3006
GS500EK-EY	89-00	VL-3006	643-3006
GS500EK1/EK2	01-02	VL-3006	643-3006
GS500FK4/FK5/FK6/FK7	04-07	VL-3006	643-3006
GSF600ST-SK3 Bandit	96-03	VL-3039	643-3039
GSX600FJ-FK6 Katana	88-06	VL-3039	643-3039
GSX-R600WN/WP	92-93	VL-3070	643-3070
RF600RR/RS/RT	94-96	VL-3070	643-3070
GS700EF/ESF	1985	VL-3016	643-3016
GS750B/C/EC/N/EN/LN	77-79	VL-3001	643-3001
GS750ET/EX/EZ	80-83	VL-3007	643-3007
GS750ED/ESD	1983	VL-3016	643-3016
GS750LT/LX	80-81	VL-3007	643-3007
GS750SD Katana	1983	VL-3007	643-3007
GS750TZ/TD	82-83	VL-3007	643-3007
GSX750FK-FK5 Katana	89-05	VL-3039	643-3039
GSX-R750G/H/J/K/L/M/N	86-92	VL-3039	643-3039
GSX-R750RG	1986	VL-3039	643-3039
GSX-R750WP/WR/WS	93-95	VL-3070	643-3070
VS800GLN-GLK4 Intruder	92-04	VL-3065	643-3065
VS800 Boulevard S50	05-06	VL-3065	643-3065
VX800L/M/N/P	90-93	VL-3065	643-3065
GS850GN/GT/GLT/GX/GLX	79-81	VL-3001	643-3001
GS850GZ/GLZ/GD/GLD	82-83	VL-3009	643-3009
RF900RR/RS/RZS/RT/RV/	94-97	VL-3070	643-3070
GS1000C/EC/N	78-79	VL-3002	643-3002
GS1000EN/ET	80-81	VL-3002	643-3002
GS1000GT/GX/GZ/GD	80-83	VL-3009	643-3009
GS1000GLT/GLX/GLZ/GLD	80-83	VL-3009	643-3009
GS1000LN	1979	VL-3009	643-3009
GS1000SN/ST	79-80	VL-3002	643-3002
GS1000SZ Katana	1983	VL-3008	643-3008
GS1100ET/EX/EZ/ED/ESD	80-83	VL-3008	643-3008
GS1100GKZ/GK2/GKD/GKE	82-84	VL-3009	643-3009
GS1100LT	1980	VL-3008	643-3008
GS1100SD Katana	1983	VL-3008	643-3008
GSX1100FJ-FP Katana	88-93	VL-3039	643-3039
GSX1100GM/GN/GP Shaft	91-93	VL-3039	643-3039
GSX-R1100G/H/J/K/L/M/N	86-92	VL-3039	643-3039
GSX-R1100WP/WR/WS/WT/WV/WW	93-98	VL-3070	643-3070
GS1150ES3/EF/EF2/ESE/ESF	83-85	VL-3008	643-3008
GS1150EG/ESG	1986	VL-3008	643-3008
GSF1200SVSW/SX/SY Bandit	97-00	VL-3039	643-3039
GSF1200SAV Bandit	1997	VL-3039	643-3039
GSF1200SK1-SK5 Bandit	01-05	VL-3039	643-3039
VS1400GLPH-GLPY Intruder	87-00	VL-3066	643-3066
VS1400GLPK1-GLPK4 Intruder	01-04	VL-3066	643-3066
VS1400 Boulevard S83	05-06	VL-3066	643-3066
VL1500W-K4 Intruder 1500 LC	98-04	VL-3066	643-3066

Suzuki ATV

Model	Year	Vesrah Ref	Order No.
LT80H-Y Quadrunner	87-00	VL-3056	643-3056
LT80K1/K2/K3/K4 Quadsport	01-04	VL-3056	643-3056
LT-F160T/V/W/X/Y/K1	96-01	VL-3033	643-3033
LT-F160K3	2003	VL-3033	643-3033
LT230EH/EJ/EK/EL Quadrunner	87-90	VL-3033	643-3033
LT230EM/EN/EP Quadrunner	91-93	VL-3033	643-3033
LT230GEF/GEG Quadrunner	85-86	VL-3033	643-3033
LT230SF/SG/SH/SJ Quadsport	85-88	VL-3034	643-3034
LT-F230G/H Quadrunner	86-87	VL-3033	643-3033
LT250RF/RG Quadracer	85-86	VL-3036	643-3036
LT250RH-RN Quadracer	87-92	VL-3060	643-3060
LT-4WDH/J/K/L/M/N/P/R/S/T	87-96	VL-3040	643-3040
LT-4WDV/WDW Quadrunner 250	97-98	VL-3040	643-3040
LT-F250J/K/L/M/N/P	88-93	VL-3040	643-3040
LT-F250R/S/T/V/W/X/Y/K1	94-01	VL-3040	643-3040
LT-F250FX/FY/FK1/FK2 Quadrunner	99-02	VL-3040	643-3040
LT300EH/EJ/EK	87-89	VL-3035	643-3035
LT-F300FX/FY/FK1/FK2 King Quad	99-02	VL-3040	643-3040
LT-F4WDXM/N/P/R King Quad	91-94	VL-3040	643-3040
LT-F4WDXS/T/V/W King Quad	95-98	VL-3040	643-3040
LT500RH/RJ/RK/RL Quadracer	87-90	VL-3067	643-3067

Suzuki Dual Sport & Offroad

RM60K3	2003	VL-4020	643-4020
RM125G	1986	VL-3044	643-3044
RM125L/M **(inner)**	90-91	VL-3055	643-3055
RM125N/P/R/S/T **(inner)**	92-96	VL-3074	643-3074
RM250G	1986	VL-3045	643-3045
RM250J	1988	VL-3058	643-3058
RM250K/L/MN/P **(inner)**	89-93	VL-3059	643-3059
RM250R/S	94-95	VL-3075	643-3075
DR250L/M/N/P Offroad	90-93	VL-3064	643-3064
DR250SL/SM/SN	90-92	VL-3064	643-3064
DR250SEP/SER Dual Sport	93-94	VL-3069	643-3069
DR250SES Dual Sport	1995	VL-3069	643-3069
DR350L/M/N/P/R Offroad	90-94	VL-3064	643-3064
DR350S/T/V/W/X Offroad	95-99	VL-3069	643-3069
DR350SL/SM/SN/SP	90-93	VL-3064	643-3064
DR350SER-SEX Dual Sport	94-99	VL-3069	643-3069
DR650SL/SM/SN/SP	90-93	VL-3068	643-3068
DR650SER/SES	94-95	VL-3068	643-3068

Yamaha Street

RX50K	1983	VL-2024	643-2024
RX50MK Midnight	1983	VL-2024	643-2024
YSR50T/U/W/A/B/D	87-92	VL-2024	643-2024
RD125LC Watercooled (Europe)	82-84	VL-2030	643-2030
TW200T/TC-W Trailway	87-07	VL-2012	643-2012
XT225D/DC-W1/WC Serrow	92-07	VL-2012	643-2012
RD250LC Watercooled (Europe)	80-82	VL-2011	643-2011
XT250L/LC Dual Sport	1984	VL-2037	643-2037
RD350LC Watercooled (Europe)	80-85	VL-2011	643-2011
RZ350L/N/NC/NCII	84-85	VL-2011	643-2011
XT350N/NC-M/MC Dual Sport	85-00	VL-2037	643-2037
FZR400U/SUC/W/SWC/A/SAC	88-90	VL-2052	643-2052
SR500E/F/G/H	78-81	VL-2003	643-2003
XJ550H/J/K Maxim	81-83	VL-2006	643-2006
XJ550RH/RJ/RK Seca	81-83	VL-2006	643-2006
XT550J/K Dual Sport	82-83	VL-2013	643-2013
FJ600L/LC/N/NC	84-85	VL-2006	643-2006
FZ600S/SC/T/TC/U/UC	86-88	VL-2006	643-2006
FZR600W/WC/AC	89-90	VL-2052	643-2052
FZR600RA/RAC-RL/RLC	90-99	VL-2052	643-2052
SRX600S/SC	1986	VL-2013	643-2013

Yamaha Street

Model	Year	Vesrah Ref	Order No.
XJ600SD/SDC-SK/SKC Seca II	92-98	VL-2057	———
XT600L/LC-EG/EGC Dual Sport	84-95	VL-2013	643-2013
YX600S/SC-A/AC Radian	86-90	VL-2006	643-2006
XJ650G/H/J/K Maxim	80-83	VL-2022	643-2022
XJ650LH Midnight Maxim	1981	VL-2022	643-2022
XJ650LJ/LK Seca Turbo	82-83	VL-2022	643-2022
XJ650RJ Seca	1982	VL-2022	643-2022
XS1-650	1970	VL-2002	643-2002
XS1B-650	1971	VL-2002	643-2002
XS2-650	1972	VL-2002	643-2002
TX650/A	73-74	VL-2002	643-2002
XS650B/C/D/E/F	75-79	VL-2002	643-2002
XS6502F	1979	VL-2002	643-2002
XS650SE/SF Special	78-79	VL-2002	643-2002
XS650G/H Special II	80-81	VL-2002	643-2002
XS650SG/SH Special	80-81	VL-2002	643-2002
XS650SJ/SK Heritage Special	82-83	VL-2002	643-2002
FZ700T/TC	1987	VL-2045	643-2045
FZX700S/SC/T/TC Fazer	86-87	VL-2045	643-2045
XV700L/LC/N/NC Virago	84-85	VL-2005	643-2005
XV700CS/CSC/CT/CTC Virago	86-87	VL-2005	643-2005
XV700SS/SSC Virago	1986	VL-2005	643-2005
FZ750N/S/SC	85-86	VL-2045	643-2045
FZ750U/UC	1988	VL-2045	643-2045
FZR750RT/RU	87-88	VL-2045	643-2045
XS750D/2D/E/F	77-79	VL-2004	643-2004
XS750SE/SF Special	78-79	VL-2004	643-2004
XJ750J/K Maxim	82-83	VL-2022	643-2022
XJ750MK Midnight Maxim	1983	VL-2022	643-2022
XJ750RH/RJ/RK Seca	81-83	VL-2022	643-2022
XV750H/J/K Virago	81-83	VL-2005	643-2005
XXV750MK Midnight Virago	1983	VL-2005	643-2005
XV750U/UC-K/KC Virago	88-98	VL-2005	643-2005
YZF750RF/RFC	1994	VL-2045	643-2045
YZF750RH/RHC/RJ/RJC/RK/RKC	96-98	VL-2045	643-2045
XS850G/H	80-81	VL-2004	643-2004
XS850LG/LH Special	80-81	VL-2004	643-2004
XS850sG/SH Midnight Special	80-81	VL-2004	643-2004
XJ900RKSeca	1983	VL-2022	643-2022
XV920J/K Virago	82-83	VL-2005	643-2005
XV920MK Midnight Virago	1983	VL-2005	643-2005
XV920RH/RJ	81-82	VL-2005	643-2005
XV1000L/LC/N/NC Virago	84-85	VL-2005	643-2005
FZR1000T/TC/U/UC/W/WC/A/AC	87-90	VL-2045	643-2045
FZR1000B/BC-G/GC	91-95	VL-2045	643-2045
YZF1000RJ/RJC	1997	VL-2045	643-2045
XJ1100J Maxim	1982	VL-2004	643-2004
XS1100E/F/G/H	78-81	VL-2004	643-2004
XS1100LG/LH Midnight Special	80-81	VL-2004	643-2004
XS1100SF/SG/SH Special	79-81	VL-2004	643-2004
XV1100S/SC-L/LC Virago	86-99	VL-2005	643-2005
XV1100SH-SK/SKC Virago	96-98	VL-2005	643-2005
FJ1200S/SC/T/TC	86-87	VL-2048	643-2048
FJ1200W/WC/A/AC/B/BC/D/DC	89-92	VL-2048	643-2048
FJ1200AD/ADC/AE/AEC (ABS)	92-93	VL-2048	643-2048

Yamaha ATV

YF60S Moto-4	1986	VL-2015	643-2015
YT60L/N Tri-Zinger	84-85	VL-2015	643-2015
YFM200N Moto-4	1985	VL-2017	643-2017
YFM200DXS-DXW Moto-4	86-89	VL-2017	643-2017
YFS200U-V Blaster	88-06	VL-2030	643-2030
YFS200SEV Blaster	2006	VL-2030	643-2030
YTM200K/L/N Tri-Moto	83-85	VL-2017	643-2017
YTM200EK/EL/ERN Tri-Moto	83-85	VL-2017	643-2017
YFM225S/T/U Moto-4 **(inner)**	86-88	VL-2017	643-2017

Clutch Cover Gaskets

Yamaha ATV

Model	Year	Vesrah Ref	Order No.
YTM225DRN/DRS Tri-Moto	85-86	VL-2017	643-2017
YTM225DXK/DXL/DXN Tri-Moto	83-85	VL-2017	643-2017
YFB250D/E/F/G/H Timberwolf	92-96	VL-2017	643-2017
YFB250FWF/FWG Timberwolf	94-95	VL-2017	643-2017
YFB250FWH/FWJ Timberwolf	96-97	VL-2017	643-2017
YFB250FWK/FWL Timberwolf	98-99	VL-2017	643-2017
YFB250FWMFWMC Timberwolf	2000	VL-2017	643-2017
YFB250UH/UJ/UK Timberwolf	96-98	VL-2017	643-2017
YFM250W/A/B Moto-4	89-91	VL-2017	643-2017
YFM250M/MC Beartracker	2000	VL-2017	643-2017
YFM250BT/BV Bruin 250	05-06	VL-2017	643-2017
YFM250XS Beartracker	2004	VL-2017	643-2017
YFM350S Raptor	2004	VL-2041	643-2041
YFM350RSET/RSEV Raptor 350 SE	05-06	VL-2041	643-2041
YFM350RT/RV Raptor	05-06	VL-2041	643-2041
YFM350ERT/ERU/ERW/ERA Moto-4	87-90	VL-2041	643-2041
YFM350ERD/ERE/ERF/ERG Moto-4	92-95	VL-2041	643-2041
YFM350FWT-FWJ Big Bear 4WD	87-97	VL-2041	643-2041
YFM350UH/UJ/UK Big Bear	96-98	VL-2041	643-2041
YFM350XT-XS/XSC Warrior	87-04	VL-2041	643-2041
YFZ350T-V Banshee	87-06	VL-2011	643-2011
YFZ350LER Banshee Limited Ed.	2003	VL-2011	643-2011
YFZ350LES Banshee Limited Ed.	2004	VL-2011	643-2011
YFZ350RB Banshee Limited Ed.	2003	VL-2011	643-2011
YFZ350SET/SEV Banshee SE	05-06	VL-2011	643-2011
YFM400FWG/FWH Kodiak	95-96	VL-2041	643-2041
YFM400FWJ/FWK Kodiak	97-98	VL-2041	643-2041

Yamaha Dual Sport & Offroad

PW50A-X Y-Zinger	90-08	VL-2015	643-2015
YZ50G	1980	VL-2024	643-2024
BW80U Big Wheel	1988	VL-2028	643-2028
BW80A Big Wheel	1990	VL-2028	643-2028
DT80H/J/K	81-83	VL-2024	643-2024
GT80A/B/C	74-76	VL-2024	643-2024
GTMX-80A/B/C/D/E/F	74-79	VL-2024	643-2024
MX80G/H/J	80-82	VL-2024	643-2024
PW80G-V Y-Zinger	95-06	VL-2028	643-2028

Yamaha Dual Sport & Offroad

Model	Year	Vesrah Ref	Order No.
YZ80A/BC/D/E/F/G	74-80	VL-2024	643-2024
YZ80J/K/L/N/S/T/U/W/A/B/D	82-92	VL-2018	643-2018
YZ80F1/G1/H1/J1/K1/L/M1/N1	93-01	VL-2059	643-2059
YZ85P/R/S/T/V (inner)	02-06	VL-2059	643-2059
XT125J/K/KC Dual Sport	82-83	VL-2012	643-2012
YZ125F1/G1/H1/J1/K1/L1 (inner)	94-99	VL-2064	643-2064
YZ125M1/N1/P/R/S1 (inner)	00-04	VL-2064	643-2064
BW200N/S Big Wheel	85-86	VL-2012	643-2012
BW200ES/ET/EUBig Wheel	86-88	VL-2012	643-2017
TW200U/UC-V/VC Trailway	88-06	VL-2012	643-2012
XT200J/K/KC Dual Sport	82-83	VL-2012	643-2012
TT225S/T	86-87	VL-2012	643-2012
TT-R225L/LC-S/SC	99-04	VL-2012	643-2012
TT-R230T/TC/V/VC	05-06	VL-2012	643-2012
XT225D/DC-V/VC Serow	92-06	VL-2012	643-2012
IT250F/G/H/J/K	79-83	VL-2016	643-2016
WR250ZB/ZD/ZE/ZF (inner)	91-94	VL-2046	643-2046
WR250ZG/ZH/ZJ (inner)	95-97	VL-2046	643-2046
XT250/L/LC Dual Sport	1984	VL-2037	643-2037
YZ250G/H	80-81	VL-2016	643-2016
YZ250U/W	88-89	VL-2046	643-2046
YZ250A1/B1/D1/E1/F1/G1/H1 (inner)	90-96	VL-2046	643-2046
YZ250J1/K1 (inner)	97-98	VL-2064	643-2064
YZ250WRW/WRA (inner)	89-90	VL-2046	643-2046
TT350S/T Offroad	86-87	VL-2037	643-2037
XT350N/NC-M/MC Dual Sport	85-00	VL-2037	643-2037
IT465H/J	81-82	VL-2016	643-2016
YZ465G/H/J	80-82	VL-2016	643-2016
IT490K/L	83-84	VL-2016	643-2016
YZ490J/K/L/N/S/T/U/W/A	82-90	VL-2016	643-2016
TT500C/D/E/F/G/H	76-81	VL-2003	643-2003
WR500ZD/ZE	92-93	VL-2016	643-2016
XT500C/D/E/F/G/H Dual Sport	76-81	VL-2003	643-2003
XT550J/K Dual Sport	82-83	VL-2013	643-2013
TT600K/L/N/S Offroad	83-86	VL-2013	643-2013
XT600L/LC-EG/EGC Dual Sport	84-95	VL-2013	643-2013

Sudco Part Number to OEM Cross Reference
Clutch Cover Gaskets

Honda

OEM Reference	Vesrah Ref	Order No.
11351-MN5-010	VL-1081	643-1081
11351-MN5-651	VL-1081	643-1081
11372-ME9-306	VL-1040	643-1040
11372-ME9-000	VL-1040	643-1040
11372-MG8-000	VL-1060	643-1060
11372-MM8-880	VL-1060	643-1060
11393-GBF-830	VL-1053	643-1053
11393-GC4-308	VL-1037	643-1037
11393-GC4-710	VL-1037	643-1037
11393-GC4-730	VL-1037	643-1037
11393-HB5-000	VL-1059	643-1059
11393-HB5-306	VL-1059	643-1059
11393-KN4-750	VL-1026	643-1026
11393-KT0-710	VL-1078	643-1078
11393-MG9-307	VL-1066	643-1066
11393-MG9-680	VL-1066	643-1066
11393-MV9-670	VL-1083	643-1083
11393-MY3-000	VL-1090	643-1090
11393-107-000	VL-1018	643-1018
11393-121-630	VL-1023	643-1023
11393-371-000	VL-1039	643-1039
11393-371-306	VL-1039	643-1039
11393-436-000	VL-1026	643-1026
11393-437-000	VL-1016	643-1016
11393-439-970	VL-1078	643-1078
11393-459-000	VL-1023	643-1023
11393-463-000	VL-1032	643-1032
11393-463-306	VL-1032	643-1032
11394-GW8-680	VL-1020	643-1020
11395-HA2-P00	VL-1030	643-1030
11394-HC4-840	VL-1072	643-1072
11394-HM3-670	VL-1087	643-1087
11394-HN1-A40	VL-1088	643-1088
11394-KA3-P00	VL-1043	643-1043
11394-KA3-740	VL-1043	643-1043
11395-KA4-770	VL-1046	643-1046
11394-KBV-000	VL-1049	643-1049
11394-KCY-670	VL-1088	643-1088
11394-KCZ-000	VL-1086	643-1086
11394-KE8-000	VL-1049	643-1049
11395-KS7-306	VL-1046	643-1046
11394-KZ1-920	VL-1047	643-1047
11394-KZ4-A90	VL-1074	643-1074
11394-KZ4-620	VL-1074	643-1074
11394-MA0-306	VL-1009	643-1009
11394-MB0-000	VL-1021	643-1021
11394-MB0-306	VL-1021	643-1021
11394-MB4-000	VL-1058	643-1058
11394-MB4-306	VL-1058	643-1058
11394-MC8-000	VL-1041	643-1041
11394-MC8-306	VL-1041	643-1041
11394-ML7-000	VL-1064	643-1064
11394-MM9-850	VL-1071	643-1071
11394-MN1-700	VL-1028	643-1028
11394-MR1-000	VL-1071	643-1071
11394-MR5-801	VL-1040	643-1040
11394-MV1-850	VL-1071	643-1071
11394-MY2-621	VL-1028	643-1028
11394-MY7-000	VL-1064	643-1064
11394-035-010	VL-1020	643-1020
11394-286-040	VL-1013	643-1013
11394-286-306	VL-1013	643-1013
11394-333-020	VL-1014	643-1014
11394-333-306	VL-1014	643-1014

Sudco Part Number to OEM Cross Reference
Clutch Cover Gaskets

Honda

OEM Reference	Vesrah Ref	Order No.
11394-377-306	VL-1008	643-1008
11394-377-000	VL-1008	643-1008
11394-428-000	VL-1009	643-1009
11395-KA5-690	VL-1054	643-1054
11395-KZ3-880	VL-1085	643-1085
11395-MAC-680	VL-1054	643-1054
11395-MJ0-000	VL-1050	643-1050
11395-MM5-000	VL-1077	643-1077
11395-MW3-600	VL-1050	643-1050
11395-MW7-790	VL-1077	643-1077
11396-MN4-000	VL-1070	643-1070
11396-MY9-000	VL-1070	643-1070
11396-300-060	VL-1001	643-1001
11396-300-306	VL-1001	643-1001
11396-425-000	VL-1002	643-1002
11396-425-306	VL-1002	643-1002

Kawasaki

11009-1033	VL-4025	643-4025
11009-1307	VL-4024	643-4024
11009-1320	VL-4012	643-4012
11009-1388	VL-4014	643-4014
11009-1484	VL-4039	643-4039
11009-1500	VL-4035	643-4035
11009-1540	VL-4034	643-4034
11009-1548	VL-4030	643-4030
11009-1556	VL-4051	643-4051
11009-1627	VL-4049	643-4049
11009-1671	VL-4042	643-4042
11009-1693	VL-4046	643-4046
11009-1698	VL-4049	643-4049
11009-1744	VL-4040	643-4040
11009-1836	VL-4039	643-4039
11009-1860	VL-4054	643-4054
11009-1954	VL-4049	643-4049
11009-1963	VL-4034	643-4034
11009-1967	VL-4046	643-4046
11009-1971	VL-4032	643-4032
11009-1976	VL-4020	643-4020
11009-1984	VL-4005	643-4005
11009-1996	VL-4037	643-4037
11060-1070	VL-4004	643-4004
11060-1099	VL-4051	643-4051
11060-1111	VL-4013	643-4013
11060-1185	VL-4056	643-4056
11060-1230	VL-4040	643-4040
11060-1148	VL-4035	643-4035
11060-1216	VL-4042	643-4042
11060-1350	VL-4055	643-4055
11060-1467	VL-4030	643-4030
11060-1494	VL-4057	643-4057
11060-1529	VL-4001	643-4001
11060-1532	VL-4025	643-4025
11060-1590	VL-4002	643-4002
11060-1648	VL-4042	643-4042
11060-1655	VL-4036	643-4036
11060-1715	VL-4043	643-4043
11061-0122	VL-4032	643-4032
11061-1126	VL-4004	643-4004
11061-1154	VL-4054	643-4054
14046-024	VL-4001	643-4001
14046-033	VL-4002	643-4002
14046-035	VL-4005	643-4005

Clutch Cover Gaskets

Sudco Part Number to OEM Cross Reference
Clutch Cover Gaskets

Suzuki

OEM Reference	Vesrah Ref	Order No.
11482-00B00-H17	VL-3045	643-3045
11482-00B20-H17	VL-3058	643-3058
11482-01B01-H17	VL-3044	643-3044
11482-01C10	VL-3060	643-3060
11482-02C10	VL-3033	643-3033
11482-12D02	VL-3068	643-3068
11482-13A00-H17	VL-3036	643-3036
11482-14D01	VL-3064	643-3064
11482-14D02	VL-3064	643-3064
11482-14D03	VL-3069	643-3069
11482-17E00	VL-3070	643-3070
11482-19B13	VL-3040	643-3040
11482-22A10	VL-3034	643-3034
11482-24501	VL-3035	643-3035
11482-27A20	VL-3039	643-3039
11482-27C02	VL-3055	643-3055
11482-28C01	VL-3059	643-3059
11482-28E10	VL-3075	643-3075
11482-31301-H17	VL-3016	643-3016
11482-38A10	VL-3065	643-3065
11482-38B10	VL-3066	643-3066
11482-38B20	VL-3066	643-3066
11482-40B10	VL-3056	643-3056
11482-41F00	VL-3065	643-3065
11482-43B00	VL-3067	643-3067
11482-43BV0	VL-3067	643-3067
11482-43D01	VL-3074	643-3074
11482-44110	VL-3006	643-3006
11482-45100-H17	VL-3001	643-3001
11482-45400-H17	VL-3007	643-3007
11482-45400	VL-3007	643-3007
11482-49000--H17	VL-3002	643-3002
11482-49100-H17	VL-3009	643-3009
11482-49201-H17	VL-3008	643-3008
11482-49202-H17	VL-3008	643-3008
K1100-91976	VL-4020	643-4020

Sudco Part Number to OEM Cross Reference
Clutch Cover Gaskets

Yamaha

OEM Reference	Vesrah Ref	Order No.
1TX-15461-00-00	VL-2048	643-2048
1UY-15461-00-00	VL-2041	643-2041
1WG-15462-00-00	VL-2052	643-2052
2GH-15461-00-00	VL-2045	643-2045
2H7-15451-10-00	VL-2004	643-2004
2H7-15451-00-00	VL-2004	643-2004
2VM-15462-11-00	VL-2046	643-2046
2VM-15462-00-00	VL-2046	643-2046
256-15451-10-00	VL-2002	643-2002
256-15451-00-00	VL-2002	643-2002
3EG-15462-00-00	VL-2005	643-2005
3GD-15461-00-00	VL-2041	643-2041
3GG-15461-02-00	VL-2011	643-2011
3GG-15461-00-00	VL-2011	643-2011
3HE-15462-10-00	VL-2052	643-2052
3HT-15462-01-00	VL-2003	643-2003
3JM-15451-11-00	VL-2030	643-2030
3JM-15451-01-00	VL-2030	643-2030
3KM-15461-00-00	VL-2006	643-2006
3KS-15461-00-00	VL-2045	643-2045
3L5-15451-11-00	VL-2015	643-2015
3L5-15451-10-00	VL-2015	643-2015
3L5-15451-01-00	VL-2015	643-2015
3MT-15451-00-00	VL-2024	643-2024
3R4-15462-11-00	VL-2016	643-2016
3R4-15462-00-00	VL-2016	643-2016
30X-15461-00-00	VL-2037	643-2037
34K-15462-00-00	VL-2013	643-2013
353-15451-00-00	VL-2024	643-2024
4AW-15451-00-00	VL-2028	643-2028
4BD-15462-00-00	VL-2017	643-2017
4BE-15462-00-00	VL-2012	643-2012
4BH-15461-00-00	VL-2045	643-2045
4DW-15462-00-00	VL-2013	643-2013
4EL-15461-04-00	VL-2037	643-2037
4ES-15461-00-00	VL-2059	643-2059
4FM-15461-00-00	VL-2045	643-2045
4G0-15461-01-00	VL-2006	643-2006
4G0-15461-00-00	VL-2006	643-2006
4H7-15461-00-00	VL-2022	643-2022
4JY-15462-00-00	VL-2064	643-2064
4L0-15461-00-00	VL-2011	643-2011
4X7-15462-00-00	VL-2005	643-2005
5H0-15462-00-00	VL-2017	643-2017
5WM-15461-02-00	VL2048	643-2048
5X2-15462-10-00	VL-2018	642-2018
5X2-15462-00-00	VL-2018	642-2018
5Y1-15462-01-00	VL-2013	643-2013
15A-15462-00-00	VL-2012	643-2012
517-15451-00-00	VL-2028	643-2028

Vesrah Oil Pan Gasket

Sold each. ***Made in Japan.***

Kawasaki

OEM Ref. 11060-1074	Order No. 646-4001
Z1/Z1A/Z1B-900	73-75
KZ900A4/A5	76-77
KZ900B1 LTD	1976
KZ1000A1/A2	77-78
KZ1000A3/A3A/A4 MKII	79-80
KZ1000B1/B2/B3/B4 LTD	77-80
KZ1000C1/C1A/C2/C3/C4	78-81
KZ1000D1 Z1R	1978
KZ1000D3 Z1R	1980
KZ1000E1/E2 Shaft ST	79-80
KZ1000G1 Classic LTD	1980
KZ1000J1/J2/J3	81-83
KZ1000K1/K2 LTD	81-82
KZ1000M1/M2 CSR	81-82
KZ1000P1-P21 Police	82-02
KZ1000P24 Police	2005
KZ1000R1/R2 Replica	82-83
KZ1100A1/A2/A3 Shaft	81-83
KZ1100B1/B2 GPz	81-82
KZ1100D1/D2 Spectre	82-83
KZ1100L1 LTD	1983
ZN1100B1/B2 LTD	84-85
ZX1100A1/A2 GPz	83-84

005-198

005-199

K&N Rubber Base Crankcase Vent Filters

Filters are designed to clamp directly to metal or plastic tubing. Ideal for engines, transmissions, oil and gas tanks on racing vehicles. Sold each.

Flange I.D.	Filter Diameter	Filter Height	K&N No.	Order No.
Rubber Top				
1-1/4"	3"	2-1/2"	62-1380	005-198
Chrome Top				
1-1/4"	3"	2-1/2"	62-1390	005-199

005-195

005-196

005-197

K&N Steel Base Crankcase Vent Filters

One piece design for competition use. 2" O.D. x 1-1/2" long (height) with rubber top. All base plates are chrome plated. Sold each.

Vent Tube Diameter	K&N No.	Order No.
1/2"	62-1010	005-195
5/8"	62-1020	005-196
3/4"	62-1030	005-197

Oil Level Gauge

Oil sight gauge for Kawasaki Z1/ KZ1000 models.
Sold each. ***Made in Japan.***

Order No. 950-265
See applications on right.

Kawasaki

OEM Reference 52015-004	Order No. 950-265
KZ650B1/B2/B2A/B3	77-79
KZ650D1/D1A/D2 SR	78-79
KZ750B1/B2/B3/B4 2-cylinder	75-79
KZ750G1 LTD 2-cylinder	1980
Z1/A/B-900	73-75
KZ900A4/A5	76-77
KZ900B1 LTD	1976
KZ1000A1/A2	77-78
KZ1000A3/A3A/A4 MKII	79-80
KZ1000B1/B2/B3/B4 LTD	77-80
KZ1000C1/C1A-C4 Police	78-81
KZ1000D1 Z1R	1978
KZ1000D3 Z1R	1980
KZ1000E1/E2 Shaft ST	79-80
KZ1000G1 LTD Classic	1980
KZ1300A1/A2 up to engine no. 009426	79-80

Hamaguchi Exhaust Systems

Hamaguchi Full & Slip-on Race Systems

Hamaguchi Ti full exhaust systems truly are works of art. You won't find better craftsmanship at any price anywhere. These are the same exhaust systems used by the four time FIM Asia Supersport Champion. Each pipe is hand made by skilled craftsman who use the "Wagiri method of forming tight radius bends without disrupting flow. This method of pipe fabrication is used on GP and high end race machines. Also, variable diameter tubing is used throughout the length of piping to ensure best power is made.

Because of the many hours of research put into developing the FIM Asia championship winning machine, the power output of these systems is quite good. These fully titanium systems are very light weight with excellent flow and sound.

Kawasaki ZX600 "ZX-6R"

Kawasaki

Model	Year	Full System	Slip-On
ZX600 Ninja ZX-6R	05-06	502-6000	———
ZX1000 Ninja ZX-10R	04-05	502-6010	———
ZX1400 Ninja ZX-14	06-07	———	502-6100

Suzuki

GSX-R600	2006	———	502-4100
GSX-R750	2006	———	502-4100
GSX-R1000	05-06	———	———
GSX-R1000	07-08	———	502-4110
GSX1300R Hayabusa	99-07	———	502-4105

Yamaha

YZF-R6	2006	502-2000	502-2100
YZF-R6 Moto-GP Slip-On	06-07	———	502-2105

Universal Muffler Packing Kit

Heavy duty, high density muffler packing with extreme heat capability.
Measures 1" x 11" x 16".
Sold each.

Order No. 502-9200

Order No. 502-4110

Order No. 502-2105

Sudco Exhaust System & Accessories

Dynojet Research Inc.

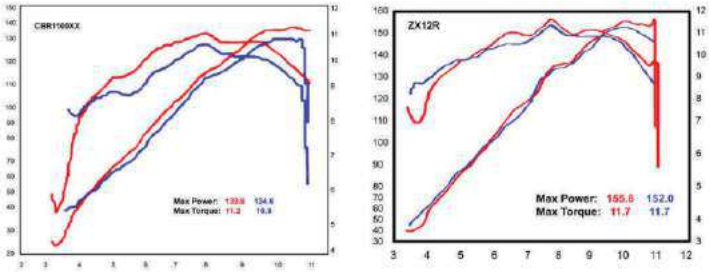

Sudco Pipe
Stock Pipe

Sudco Exhaust Systems

Sudco full exhaust systems are made exclusively in Japan for Sudco International. Sudco exhaust systems feature high quality stainless steel tubing that are polished to a mirror like finish. With light weight and great looks in mind; exhaust fumes exit an even weave carbon fiber exhaust canister. The Sudco exhaust systems perform just as amazing as they look with mandrel bend tubing and 4-2-1 collectors, producing strong midrange power increases that carries all the way to redline. Available for the following models:

Kawasaki

Model		Year	Order No.
ZX12R	Ninja	00-03	502-S640

Suzuki

GSX-R600	01-04	502-S436
GSX-R750	00-03	502-S436
GSX-R1000	01-03	502-S438

Helix Exhaust Springs with Straight Hook

Zinc plated with straight hook end exhaust springs. Sold in pairs.

Description	Order No.	Description	Order No.
57mm	502-9250	80mm	502-9255
63mm	502-9251	83mm	502-9256
67mm	502-9252	90mm	502-9257
70mm	502-9253	95mm	502-9258
75mm	502-9254		

Helix Exhaust Springs with Swivel Hook

Stainless steel with swivel hook-end exhaust springs. Sold in pairs.

Description	Order No.	Description	Order No.
38mm	502-9270	75mm	502-9276
57mm	502-9271	80mm	502-9277
60mm	502-9272	83mm	502-9278
63mm	502-9273	90mm	502-9279
67mm	502-9274	95mm	502-9280
70mm	502-9275	100mm	502-9281

Motion Pro Spring Hooks (Pullers)

Use to remove exhaust pipe springs, seat or tank holding springs, cotter pins, side stand springs and other parts. Sold each.

Description	Order No.
Standard Spring Hook	950-725
Heavy Duty T-Handle Spring Hook	950-726

Hardware, Heat Shield & Exhaust Wrap

502-9225

502-9227

Heat Shield

Fiberglass cloth, 1/32" thick, with aluminum foil. Attaches easily with adhesive. Protects against heat on side covers or near electrical connectors. Sold each.

Description	Order No.
1.5" width by 3" length with adhesive	502-9225
1,5" width by 15" length roll with adhesive	502-9226
18" width by 18" length sheet with adhesive	502-9227

Exhaust Wrap

Black or tan fiberglass cloth header wrap. Use on exhaust systems to reduce heat and for protection. Sold each.

Description	Order No.
Black 1" width by 50' length roll	502-9210
Black 2" width by 50' length roll	502-9211
Tan 1" width by 50' length roll	502-9215
Tan 1" width by 50' length roll	502-9216

Off-Road Hardware Kit 170pcs

170 piece kit contains a selection of metric nuts, bolts & washers most commonly needed for off-road and street bike repair. Covers body panel retainers to kick starter bolts. Compact and durable snap lock plastic box with dividers that can be easily stowed in your car, truck, trailer or toolbox Box measures 11 in x 8 in x 2 in.
Includes 10 of each of following

Order No. 950-779

Description	Description	Description
8 mm Flange Nuts	8 mm Nylock Nuts	6 mm Nylock Nuts
6 mm Hex Nuts	8 mm Hex Nuts	8 mm Fuji Nuts
6 mm Flat Washers	8 mm Flat Washers	6 X 16 Pan Head
10 mm Flat Washers	6 mm Fender Washers	6 X 30 Pan Head
6 X 25 Allen Bolts	6 X 16 Flange Bolt	8 X 30 Flange Bolt
8 X 30 Allen Bolts	8 X 16 Flange Bolt	

Metric Flange Head Bolts Hardware Kit (Zinc)

Contains 10 pcs of each of the following zinc plated bolts and durable compact snap lock plastic box with dividers.

Order No. 950-783

Description	Description	Description
6 X 10 Flange Bolt	6 X 35 Flange Bolt	8 X 25 Flange Bolt
6 X 16 Flange Bolt	6 X 40 Flange Bolt	8 X 30 Flange Bolt
6 X 20 Flange Bolt	6 X 45 Flange Bolt	8 X 35 Flange Bolt
6 X 25 Flange Bolt	8 X 16 Flange Bolt	8 X 40 Flange Bolt
6 X 30 Flange Bolt	8 X 20 Flange Bolt	8 X 50 Flange Bolt

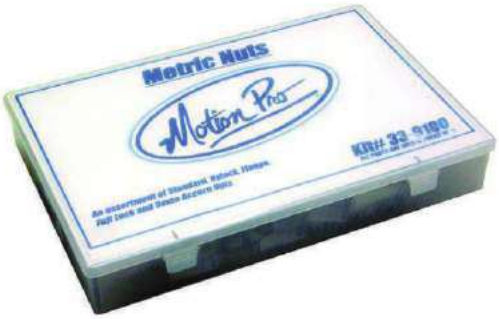

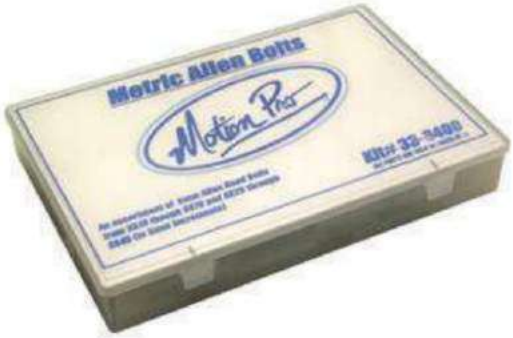

Metric Nut Hardware Kit (Zinc)

Contains 10 pcs of each of the following zinc plated nuts and durable compact snap lock plastic box with dividers.

Order No. 950-781

Description	Description	Description
5mm Nut	8mm Nylock Nut	6mm Fuji Lock Nut
6mm Nut	10mm Nylock Nut	8mm Fuji Lock Nut
8mm Nut	5mm Flange Nut	10mm Fuji Lock Nut
10mm Nut	6mm Flange Nut	12mm Fuji Lock Nut
12mm Nut	8mm Flange Nut	5mm Acorn Low Dome
4mm Nylock Nut	10mm Flange Nut	6mm Acorn Low Dome
5mm Nylock Nut	12mm Flange Nut	8mm Acorn Low Dome
6mm Nylock Nut	12mm Flange Nut	10mm Acorn Low Dome
		12mm Acorn Low Dome

Metric Allen Bolt Hardware Kit (Zinc)

Contains 10 pcs of each of the following zinc plated bolts and durable compact snap lock plastic box with dividers.

Order No. 950-784

Description	Description	Description
6 X 10 Allen	6 X 45 Allen	8 X 25 Allen
6 X 12 Allen	6 X 50 Allen	8 X 30 Allen
6 X 18 Allen	6 X 55 Allen	8 X 35 Allen
6 X 25 Allen	6 X 60 Allen	8 X 40 Allen
6 X 30 Allen	6 X 65 Allen	8 X 45 Allen
6 X 35 Allen	6 X 70 Allen	
6 X 40 Allen	8 X 20 Allen	

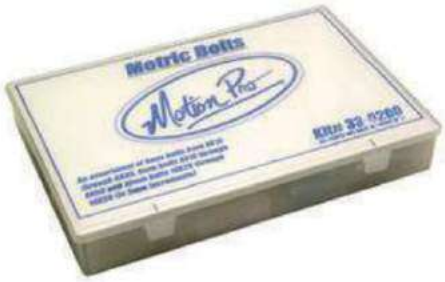

Metric Washer Hardware Kit (Zinc)

Contains 10 pcs of each of the following zinc plated washers and durable compact snap lock plastic box with dividers.

Order No. 950-780

Description	Description	Description
4mm Flat Washer	12mm Flat Washer	10mm Lock Washer
5mm Flat Washer	4mm Lock Washers	12mm Lock Washer
6mm Flat Washer	5mm Lock Washer	6mm Fender Washer
8mm Flat Washer	6mm Lock Washer	8mm Fender Washer
10mm Flat Washer	8mm Lock Washer	

Metric Hex Bolt Hardware Kit (Zinc)

Contains 10 pcs of each of the following zinc plated metric grade 4.8 bolts and durable compact snap lock plastic box with dividers.

Order No. 950-782

Description	Description	Description
6 X 10 Bolt	6 X 50 Bolt	10 X 20 Bolt
6 X 15 Bolt	8 X 10 Bolt	10 X 25 Bolt
6 X 20 Bolt	8 X 25 Bolt	10 X 30 Bolt
6 X 25 Bolt	8 X 30 Bolt	10 X 35 Bolt
6 X 30 Bolt	8 X 35 Bolt	10 X 40 Bolt
6 X 35 Bolt	8 X 40 Bolt	10 X 45 Bolt
6 X 40 Bolt	8 X 45 Bolt	10 X 50 Bolt
6 X 45 Bolt	8 X 50 Bolt	

Exhaust Pipe Plug

For use on 2-stroke and 4-stroke mufflers. Prevents water from entering exhaust muffler and keeps muffler packing fresh. Sold each.

Order No. 502-9205

Valve Shims

Sudco 7.5mm Valve Adjustment Shim Kits

Sudco shims are OEM specific dimensions for proper fitment. (7.47mm - 7.49mm) Available in shop kit and individual sizes. Individual sizes sold each. ***Made in Japan.***

See model application list on next column.

Honda/Kawasaki/Suzuki/Yamaha 7.50mm Diameter

7.5mm Diameter Dealer Shim Kit 1.35mm - 2.15mm (total 34 shims)
Order No. 035-001
Includes storage box and qt 2 each size of the following:
1.35, 1.40, 1.45, 1.50, 1.55, 1.60, 1.65, 1.70, 1.75, 1.80, 1.85
1.90, 1.95, 2.00, 2.05, 2.10, 2.15

7.5mm Diameter Dealer Shim Kit 2.20mm - 3.00mm (total 34 shims)
Order No. 035-002
Includes storage box and qt 2 each size of the following:
2.20, 2.25, 2.30, 2.35, 2.40, 2.45, 2.50, 2.55, 2.60, 2.65, 2.70
2.75, 2.80, 2.85, 2.90, 2.95 3.00

7.50mm Valve Adjustment Shims

Sizes available from 1.35 mm thickness - 3.00mm thickness. Sold each.

Size	Order No.	Size	Order No.
1.35 mm	035-100	2.20 mm	035-117
1.40 mm	035-101	2.25 mm	035-118
1.45 mm	035-102	2.30 mm	035-119
1.50 mm	035-103	2.35 mm	035-120
1.55 mm	035-104	2.40 mm	035-121
1.60 mm	035-105	2.45 mm	035-122
1.65 mm	035-106	2.50 mm	035-123
1.70 mm	035-107	2.55 mm	035-124
1.75 mm	035-108	2.60 mm	035-125
1.80 mm	035-109	2.65 mm	035-126
1.85 mm	035-110	2.70 mm	035-127
1.90 mm	035-111	2.75 mm	035-128
1.95 mm	035-112	2.80 mm	035-129
2.00 mm	035-113	2.85 mm	035-130
2.05 mm	035-114	2.90 mm	035-131
2.10 mm	035-115	2.95 mm	035-132
2.15 mm	035-116	3.00 mm	035-133

Honda

Model	Year
NX250	88-90
CB400 CB1 400	89-90
CB600F (599)	04-05
CBR600F2 Hurricane	91-94
CBR600F3 Hurricane	95-98
CBR600F4 Hurricane	99-05
CBR600F4i Hurricane	99-05
CBR600RR	03-05
CBR600SE Hurricane	1998
CBR600SJR Replica	1996
FSC600 Silverwing	02-05
FSC600A (ABS)	03-05
FSC600D Silverwing	2003
RVF750R RC45	1994
VF750C Magna	94-03
VF750CD Magna Deluxe	95-96
VF750C2 Magna Deluxe	97-00
VFR750F	90-97
VFR750R RC30	1990
VFR800FI Interceptor	98-01
VFR800 Interceptor	02-05
VFR800A Interceptor ABS	02-05

Honda Street

Model	Year
CB900F 919	02-05
CBR900RR/CBR929/CBR954	93-03
CBR1000RR	04-05
CBR1100XX Blackbird	97-03
ST1100/A	91-02
ST1300/A	03-05
GL1800/A Goldwing	01-05
NRX1800DA/DB/EA/EB Valkyrie Rune	04-05

Honda Offroad

CRF250R/CRF250X	04-05

Kawasaki Street

ZX600D1/D2/D3/D4 Ninja ZX-6	90-93
ZX600E1-E10 Ninja ZX-6	93-02
ZX600E11/E12 ZZR600	03-04
ZX600F1/F2/F3 Ninja ZX-6R	95-97
ZX600G1/G2 Ninja ZX-6R	98-99
EJ650A2/A3/A4 W650	00-02
ZX750J1/J2 Ninja ZX-7	91-92
ZX750K1/K2 Ninja ZX7-R	91-92
ZX750L1/L2/L3 Ninja ZX-7	93-95
ZX750M1/M2 Ninja ZX7-R	93-94
ZX750N1/N2 Ninja ZX7-RR	96-97
ZX750P1-P8 Ninja ZX7-R	96-03
ZX900B1/B2/B3/B4 Ninja ZX-9R	94-97
ZX900C/E/F Ninja ZX-9R	98-03
ZR1000A1/A2/A3 Z1000	03-05
ZX1000C1/C2 Ninja ZX-10R	04-05

Kawasaki Dual Sport & Offroad

KL250G4/G5/G6/G7 Super Sherpa	00-03
KLX250D2/D3/D4	94-96
KLX300A2-A10	97-05

Suzuki Street

GSX-R600WN/WP	92-93
GSX-R600V/W/X/Y/K1/K2/K3/K4/K5	97-05
GSX-R600ZK3	2003
RF600RR/RS/RT	94-96
AN650K3/K4/K5 Burgman	03-05
SV650X/Y/K1/K2/K3/K4/K5	99-05
SV650SX/SY/SK1/SK2/SK3/SK4/SK5	99-05
GSX-R750WP/WR/WS	93-95
GSX-R750T/V/W/X/Y/K1/K2/K3/K4/K5	96-05
RF900RR/RS/RZS/RT/RV	94-97
GSX-R1000K1/K2/K3/K4/K5	01-05
GSX-R1100WP/WR/WS/WT/WV/WW	93-98

Suzuki Offroad

DR-Z250K1/K2/K3/K4/K5	01-05

Yamaha Street

FZR400U/SUC/W/SWC/A/SAC	88-90
FZ600SS/ST/STC FZ6	04-05
FZR600W/WC/AC/RA/RAC-RL/RLC	89-99
YZF600RG/RG-RV/RVC	95-06
YZF-R6L/LC/-T/TC	99-05
YZF-R6SN/SNC Champions Limited Ed.	2001
YZF750RF/RFC-RK/RKC	94-98
FZR1000W/WC-G/GC	89-95
FZS1000N/NC/-T/TC FZ-1	01-05
GTS1000AE/AEC/AF/AFC	93-94
YZF1000RJ/RJC/RK/RKC	97-98
YZF-R1L/LC-T/TC	99-05
YZF-R1SN/SNC Champions Limited Ed.	2001

Sudco 9.50mm Valve Adjustment Shim Kit

Sudco shims are OEM specific dimensions for proper fitments.
Available in shop kit and individual sizes.
Individual sizes sold each. ***Made in Japan.***

Honda/Kawasaki/Suzuki/Yamaha 9.50mm Diameter

9.5mm Diameter Dealer Shim Kit 2.35mm - 3.30mm (total 34 shims)
Order No. 035-006
Includes storage box and qt 2 each size of the following:
2.30, 2.35, 2.40, 2.45, 2.50, 2.55, 2.60, 2.65, 2.70, 2.75, 2.80, 2.85
2.90, 2.95, 3.00, 3.05, 3.10, 3.15, 3.20, 3.25, 3.30.

Valve Shim Storage Box **Order No. 008-001**

9.50mm Valve Adjustment Shims

Sizes available from 2.30 mm thickness - 3.30mm thickness.
Sold each.

Size	Order No.	Size	Order No.
2.30mm	035-243	2.85mm	035-230
2.35 mm	035-220	2.90mm	035-231
2.40 mm	035-221	2.95mm	035-232
2.45mm	035-222	3.00mm	035-233
2.50mm	035-223	3.05mm	035-234
2.55mm	035-224	3.10mm	035-235
2.60mm	035-225	3.15mm	035-236
2.65mm	035-226	3.20mm	035-237
2.70mm	035-227	3.25mm	035-238
2.75mm	035-228	3.30mm	035-239
2.80mm	035-229		

Honda Street

Model	Year
RVT1000R RC51	00-05
VTR1000F Superhawk	98-05

Honda ATV

TRX450R ATV	04-05

Honda Offroad

CRF450R	02-05
CRF450X	04-05

Kawasaki Street

Model	Year
ZX750H1/H2 Ninja ZX-7	89-90
VN800A1-A11 Vulcan 800	95-05
VN800B1-B10 Vulcan 800 Classic	96-05
VN800C1/C2 Vulcan 800 Drifter	99-00
VN800E1/E2/E3/E4/E5 Vulcan 800 Drifter	01-05
ZX1000B1/B2/B3 Ninja ZX-10	88-90
ZR1100C3/C4 ZRX1100	99-00
ZX1100C1/C2/C3 Ninja ZX-11	90-92
ZX1100D1-D9 Ninja ZX-11	93-01
ZX1100E1/E2/E3 GPz	95-97
ZX1100F1 GPz (ABS)	1996
ZX1200A1/A2 Ninja ZX-12R	00-01
ZX1200B1/B2/B3/B4 Ninja ZX-12R	02-05
ZX1200C1/C2/C3/C4 ZZR1200	02-05
ZR1200A1/A2/A3/A4/A5 ZRX1200	01-05

Kawasaki ATV

KSF400A1/A2/A3 KFX400	03-05

Kawasaki Dual Sport & Offroad

KLX400A1 KLX400SR Dual Sport	2003
KLX400B1 KLX400R Offroad	2003

Kawasaki Personal Watercraft

JT1200B1/B2 Jet Ski STX12F	03-04
JT1500A1 Jet Ski STX15F	2004

Suzuki Street

GSX600FN/FP/FR/FS/FT/FV Katana	92-97
GSX-R750M/N	91-92
DL1000K2/K3/K4/K5 V-Storm	02-05
SV1000K3/K4/K5	03-05
SV1000SK3/SK4/SK5	03-05
TL1000SV/SW/SX/SY/SK1	97-01
TL1000RW/RX/RY/RK1/RK2/RK3/RK4	98-04
GSX-R1100M/N	91-92
GSX1300RX/RY/RK1/RK2/RK3 Hayabusa	99-03
GSX1300RK4/RK5 Hayabusa	04-05

Suzuki ATV

LT-Z400K3/K4/K5 Z400 Quadsport	03-05

Suzuki Dual Sport & Offroad

DR-Z400Y/K1/K2/K3 Offroad	00-03
DR-Z400SY/SK1/SK2/SK3/SK4 Dual Sport	00-04
DR-Z400EY/EK1/EK2/EK3/EK4 Offroad	00-04

Yamaha Street

TDM850D/DC/E/EC	92-93
FJR1300AS/ASC/AT/ATC ABS	04-05
FJR1300R/RC/S/SC/T/TC	03-05

Yamaha ATV

YFZ450S/T	04-05
YFZ450SET Special Edition	2005

Yamaha Offroad

TT250RL/RLC	1999
TT-R250M/MC/N/NC/P/PC/R/RC	00-03
TT-R250S/SC/T/TC/V/VC Offroad	04-06
WR400FK/FL/FM Offroad	98-00
YZ400FK/FL Offroad	98-99
YZ426FM/FN/FP Offroad	00-02
WR426FN/FP Offroad	01-02
WR450FR/FS/FT Offroad	03-05
YZ450FR/FS/FT Offroad	03-05

Valve Shims

13mm Valve Adjustment Shim Kits

Sold as dealer kit and in individual sizes. Individual sizes sold each.
See model application list on next column.

Kawasaki 13mm Diameter

13mm Diameter Dealer Shim Kit 2.30mm - 3.10mm

Order No. 035-025

Includes storage box and qt 2 each size of the following:
2.30, 2.40, 2.50, 2.55, 2.60, 2.65, 2.70, 2.75, 2.80, 2.85, 2.90, 2.95, 3.00, 3.10

Valve Shim Storage Box **Order No.** 008-001

13mm Valve Adjustment Shims

Sizes available from 2.30mm - 3.10mm thickness. Sold each.

Size	Order No.	Size	Order No.
2.30mm	035-619	2.75mm	035-628
2.40mm	035-621	2.80mm	035-629
2.50mm	035-623	2.85mm	035-630
2.55mm	035-624	2.90mm	035-631
2.60mm	035-625	2.95mm	035-632
2.65mm	035-626	3.00mm	035-633
2.70mm	035-627	3.10mm	035-635

Kawasaki Street

Model	Year
KZ550A1/A2/A3	80-82
KZ550A4	1983
KZ550C1-C4 LTD	80-83
KZ550D1 GPz	1981
KZ550F1/F2 Spectre & LTD	83-84
KZ550H1/J2 GPz	82-83
KZ550M LTD	1983
ZR550B1/B2/B3/B4 Zephyr	90-93
ZX550A1/A2/A3 GPz	84-86
KZ650B1/B2/B2A	77-78
KZ650B3	1979
KZ650C1/C2 Custom	77-78
KZ650C3 Custom	1979
KZ650D1/D1A SR	1978
KZ650D2 SR	1979
KZ650E1 LTD	1980
KZ650F1	1980
KZ650H1/H2 CSR	81-82
KZ650H3	1983
KZ700A1	1984
ZN700A1/A2 LTD	84-85
KZ750E1/E2/E3	80-82
KZ750F1 LTD	1983
KZ750H1/H2/H3 LTD	80-82
KZ750H4	1983
KZ750L3	1983
KZ750N1/N2 Spectre	82-83
KZ750R1 GPz	1982
ZR750C1/C2/C3 Zephyr	91-93
ZR750F2 ZR-7	2000
ZR750H1/H2/H3 ZR-7S	01-03
ZX750A1/A2/A3 GPz	83-85
ZX750E1/E2 GPz Turbo	84-85
ZR1100A1/A2/A3/A4	92-95
ZR1100C/3C4 ZRX1100	99-00
ZX1100A1/A2 GPz	83-84

25mm Valve Adjustment Shim Kits

Sold as dealer kit and in individual sizes. Individual sizes sold each.
See model application list on next column.

Honda/Triumph/Yamaha 25mm Diameter

25mm Diameter Dealer Shim Kit 2.30mm - 2.70mm (total 34 shims)
Order No. 035-010
Includes storage box and qt 2 each size of the following:
2.30, 2.35, 2.40, 2.45, 2.50, 2.55, 2.60, 2.65, 2.70

25mm Diameter Dealer Shim Kit 2.75mm - 3.10mm
Order No. 035-011

Valve Shim Storage Box **Order No. 008-001**

25mm Valve Adjustment Shims

Sizes available from 2.30mm - 3.20mm thickness. Sold each.

Size	Order No.	Size	Order No.
2.30mm	035-319	2.75mm	035-328
2.35mm	035-320	2.80mm	035-329
2.40mm	035-321	2.85mm	035-330
2.45mm	035-322	2.90mm	035-331
2.50mm	035-323	2.95mm	035-332
2.55mm	035-324	3.00mm	035-333
2.60mm	035-325	3.05mm	035-334
2.65mm	035-326	3.10mm	035-335
2.70mm	035-327	3.20mm	035-337

Motion Pro Valve Shim Tools

Manufactured from hardened alloy steel. Compresses valve shim bucket for removal of valve adjustment shim.

Valve Shim Tool for Honda DOHC **Order No. 950-436**
CB750C/F/K/L/SC 80-83, CB900C/F 80-82
CB1000C 1983, CB1100F 1983, CBX1047cc 79-82
Use on Honda applications listed on next column

Valve Shim Tool for Yamaha XJ600 only **Order No. 950-435**
XJ600 Seca II (92-98) Use with XJ600 application only

Honda Street

Model	Year
CB750C Custom	80-82
CB750F Super Sport	79-82
CB750K	79-82
CB750L LTD	1979
CB750SC Nighthawk	82-83
CB900C Custom	80-82
CB900F Super Sport	81-82
CB1000C Custom	1983
CB1100F Super Sport	1983
CBX1047cc	79-82

Triumph

All water-cooled three & four cylinder models

Yamaha Street

SRX250T/TC	1987
XJ600SD/SDC-SK/SKC Seca II	92-98
XVZ12TK/TDK Venture & Venture Royale	1983
XVZ12DL/DKC2/DN Venture Royale	84-85
XVZ13DS/DT Venture Royale	86-87
XVZ13DSC/DTC Venture Royale	86-87
XVZ13T/TC/U/UC Venture	87-88
XVZ13DU/DUC/DW/DWC Venture Royale	88-89
XVZ13DA/DAC/DB/DBC Venture Royale	90-91
XVZ13DD/DDC/DE/DEC Venture Royale	92-93
VMX12N/NC/S/SC V-Max	85-86
VMX12U/UC/W/WC/A/AC/B/BC/D/DC/E/EC V-Max	88-93
VMX12F/FC/G/GC/H/HC/J/JC/K/KC/L/LC V-Max	94-99
VMX12M/MC/N/NC/P/PC/R/RC V-Max	00-03
VMX12S1/S1C/T/TC/V/VC/W1/W1C V-Max	04-07
FJ1100L/LC/N/NC	84-85
FJ1200S/SC/T/TC	86-87
FJ1200W/WC/A/AC/B/BC/D/DC	89-92
FJ1200AD/ADC/AE/AEC (ABS)	92-93
XVZ1300AH/AHC/AJ/AJC/AK/AKC Royal Star	96-98
XVZ1300AL/ALC/AM/AMC Royal Star Boulevard	99-00
XVZ1300AN/ANC Royal Star Boulevard	2001
XVZ1300ATH/ATHC/ATJ/ATJC Royal Star Tour Classic	96-97
XVZ1300ATK/ATKC/ATL/ATLC Royal Star Tour Classic	98-99
XVZ1300ATM/ATMC Royal Star Tour Classic	2000
XVZ1300LTJ/LTJC/LTK/LTKC Royal Star Tour Deluxe	97-98
XVZ1300LTL/LTLC/LTM/LTMC Royal Star Tour Deluxe	99-00
XVZ1300LTN/LTNC Royal Star Tour Deluxe	2001
XVZ1300CTT/CTC Royal Star Tour Deluxe	2005
XVZ1300TFSMC Royal Star Venture MM	2000
XVZ1300TFL/TFLC/TFM/TFMC Royal Star Venture	99-00
XVZ1300TFN/TFNC/TFP/TFPC Royal Star Venture	01-02
XVZ1300TFR/TFRC/TFS/TFSC Royal Star Venture	03-04
XVZ1300TFT/TFTC Royal Star Venture	2005
XVZ1300TFSP/TFSPC Royal Star Midnight Venture	2002
XVZ1300TFSR/TFSRC Royal Star Midnight Venture	2003
XVZ1300TFMS/TFMSC Royal Star Midnight Venture	2004
XVZ1300TFMT/TFMTC Royal Star Midnight Venture	2005

Yamaha Dual Sport & Offroad

XT250L/LC Dual Sport	1984
TT350S/T Offroad	86-87
XT350N/NC-M/MC Dual Sport	85-00

Valve Shims

29mm Valve Adjustment Shim Kits

Sold as dealer kit and in individual sizes. Individual sizes sold each.
See model application list on next column.

Kawasaki/Yamaha 29mm Diameter

Dealer Shim Kit 2.00mm - 2.50mm
Order No. 035-015
Includes storage box and qt 2 each size of the following:

2.00, 2.05, 2.10, 2.15, 2.20, 2.25, 2.30, 2.35, 2.40, 2.45, 2.5 Dealer

Shim Kit 2.55mm - 3.10mm
Order No. 035-016
Includes storage box and qt 2 each size of the following:
2.55, 2.60, 2.65, 2.70, 2.75, 2.80, 2.85, 2.90, 2.95, 3.00, 3.05, 3.10

Valve Shim Storage Box **Order No. 008-001**

29mm Valve Adjustment Shims

Sold each. Sizes available from 2.00mm - 3.10mm thickness.

Size	Order No.	Size	Order No.
2.00 mm	035-413	2.55mm	035-424
2.05mm	035-414	2.60mm	035-425
2.10mm	035-415	2.65mm	035-426
2.15mm	035-416	2.70mm	035-427
2.20mm	035-417	2.75mm	035-428
2.25mm	035-418	2.80mm	035-429
2.30mm	035-419	2.85mm	035-430
2.35mm	035-420	2.90mm	035-431
2.40mm	035-421	2.95mm	035-432
2.45mm	035-422	3.00mm	035-433
2.50mm	035-423	3.05mm	035-434
		3.10mm	035-435

Cam Cover End Plugs NEW

Billet aluminum machined cam cover plugs with satin finish. Will not blow out or suck as the stock rubber plugs. Fits Kawasaki Z1/KZ900 and KZ1000 models shown. Sold in set of 4.

Order No: 620-9990

Motion Pro Valve Shim Tools

Manufactured from hardened alloy steel. Compresses valve shim bucket for removal of valve adjustment shim.

Valve Shim Tool for Kawasaki **Order No. 950-437**
Z1/A/B-900/KZ900/KZ1000/KZ1100/KZ1300/ZN1300
Use on Kawasaki applications listed on next column

Valve Shim Tool for Yamaha **Order No. 950-438**
XJ550/XJ650/XJ750/XS750/XS850/XS1100
Use on all Yamaha applications listed on next column

Kawasaki Street

Model	Year
Z1/A/B-900	73-75
KZ900A4/A5	76-77
KZ900B1 LTD	1976
KZ1000A1/A2	77-78
KZ1000A3/A3A/A4 MKII	79-80
KZ1000B1/B2/B3/B4 LTD	77-80
KZ1000C1/C1A/C2/C3/C4 Police	78-81
KZ1000D1 Z1R	1978
KZ1000D3 Z1R	1980
KZ1000E1/E2 Shaft ST	79-80
KZ1000G1 LTD Classic	1980
KZ1000J1/J2/J3	81-83
KZ1000K1/K2 LTD	81-82
KZ1000M1/M2 CSR	81-82
KZ1000P1-P22 Police	82-03
KZ1000P24 Police	2005
KZ1000R1/R2 Replica	82-83
KZ1100A1/A2/A3 Shaft	81-83
KZ1100B1/B2 GPz	81-82
KZ1100D1/D2 Spectre	82-83
KZ1100L1 LTD	1983
ZN1100B1/B2 LTD	84-85
KZ1300A1/A2/A3/A4	79-82
KZ1300B2 Touring	1980
ZN1300A1-A6 Voyager	83-87

Kawasaki Dual Sport & Offroad

KL600A1/B1/B2 KLR600	84-86
KL650A1-A19 KLR650	87-05
KL650A6F/A7F/A8F/A9F KLR650	06-09
KL650EAF/EBF/ECF/EDF KLR650	10-13
KL650B2/B3 Tengai KLR650	90-91
KLX650A1/A2/A3/D1 Offroad	93-96
KLX650C1/C2/C3/C4 Dual Sport	93-96

Yamaha Street

XS400J/K Maxim	82-83
XS400RJ/RK Seca	82-83
XJ550H/J/K Maxim	81-83
XJ550RH/RJ/RK Seca	81-83
FJ600L/LC/N/NC	84-85
FZ600S/SC/T/TC/U/UC	86-88
YX600S/SC-A/AC Radian	86-90
XJ650G/H/J/K Maxim	80-83
XJ650LH Midnight Maxim	1981
XJ650RJ Seca	1982
XJ650LJ/LK Seca Turbo	82-83
XJ700N/NC/S/SC Maxim	85-86
XJ750J/K Maxim	82-83
XJ750MK Midnight Maxim	1983
XJ750RH/RJ/RK Seca	81-83
XS750D/2D/E/F	77-79
XS750SE/SF Special	78-79
XS850G/H	80-81
XS850LG/LG Midnight Special	80-81
XS850SG/SH Special	80-81
XJ900RK Seca	1982
XJ1100J Maxim	1982
XS1100E/F/G/H	78-81
XS1100LG/LH Midnight Special	80-81
XS1100SF/SG/SH Special	79-81

950-437

950-438

29.5mm Valve Adjustment Shim Kit

Sold as dealer kit and in individual sizes. Individual sizes sold each.
See model application list on next column.

Suzuki 29.5mm Diameter

Dealer Shim Kit 2.30mm - 3.00mm

Order No. 035-020

Includes storage box and qt 2 each size of the following:
2.30, 2.35, 2.40, 2.45, 2.50, 2.55, 2.60, 2.65, 2.70, 2.75, 2.80
2.85, 2.90, 3.00.

Valve Shim Storage Box **Order No. 008-001**

29.5mm Valve Adjustment Shims

Sold each. Sizes available from 2.30mm - 3.00mm thickness.

Size	Order No.	Size	Order No.
2.30mm	035-519	2.65mm	035-526
2.35mm	035-520	2.70mm	035-527
2.40mm	035-521	2.75mm	035-528
2.45mm	035-522	2.80mm	035-529
2.50mm	035-523	2.85mm	035-530
2.55mm	035-524	2.90mm	035-531
2.60mm	035-525	3.00mm	035-533

APE Kawasaki Cam Cover Caps

Owners of race only Kawasaki's using the popular "J model" or GPZ1100 cylinder head can now remove the smog hose caps without leaving those ugly holes in the valve cover. The APE Billet caps are CNCed for perfect fit and stunning good looks. They fit all 1000s and 1100s with smog hoses in the cam cover. Sold in pairs, with allen bolts.

APE No. KCK1100 **Order No. 875-600**

Cam Cover End Plugs NEW

Billet aluminum machined cam cover plugs with satin finish. Will not blow out or suck as the stock rubber plugs. Fits Kawasaki Z1/KZ900 and KZ1000 models shown. Sold in set of 4.

Order No: 620-9990

Engine Valves

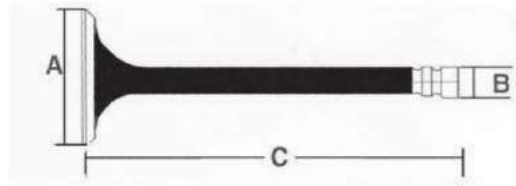

Vesrah Engine Valves

Sudco offers high performance engine valves manufactured in Japan to the highest quality standards by Fuji. All valves feature advanced technology, and tuff tride treatment for a superior product, with high resistance to wear, burn oxidation and corrosion. ***Made in Japan.*** Valves are sold each. Order per quantity required.

Honda Street

Model	Year	Intake No.	Exhaust No.
CB125S	76-85	622-1014I	622-1014E
CB750A Automatic	76-77	622-1002I	622-1002E
CB750C Custom	80-82	622-1003I	622-1003E
CB750F Super Sport	75-76	622-1002I	622-1002E
CB750F Super Sport	79-82	622-1003I	622-1003E
CB750K D-K5/K	69-77	622-1002I	622-1002E
CB750K	79-82	622-1003I	622-1003E
CB750L LTD	1979	622-1003I	622-1003E
CB750SC Nighthawk	82-83	622-1003I	622-1003E
VF750C V45 Magna	82-83	622-030I	622-030E
VF750S V45 Sabre	82-83	622-030I	622-030E
CB900C Custom	80-82	622-1006I	622-1006E
CB900F Super Sport	81-82	622-1006I	622-1006E
CB1000C Custom	1983	622-1006I	622-1006E
CBX	79-82	622-1003I	622-1003E
CB1100F Super Sport	1983	622-1006I	622-1006E

Honda ATV

ATC185	1980	622-1014I	622-1014E
ATC185S	81-83	622-1014I	622-1014E
ATC200	81-83	622-1014I	622-1014E
ATC200E	82-83	622-1014I	622-1014E
ATC200ES	1984	622-1014I	622-1014E
ATC200M	84-85	622-1014I	622-1014E
ATC200S	84-86	622-1014I	622-1014E
ATC200X	83-85	622-1014I	622-1014E
ATC200X	86-87	622-1024I	622-1024E
TRX200 Fourtrax 200	1984	622-1014I	622-1014E
TRX200 Fourtrax 200	90-91	622-1014I	622-1014E
TRX200D Fourtrax 200 Type II	91-97	622-1024I	622-1024E
TRX200SX Fourtrax	86-87	622-1024I	622-1024E
ATC250ES	85-87	622-1016I	622-1016E
ATC250SX	85-87	622-1016I	622-1016E
TRX250 Fourtrax	85-87	622-1016I	622-1016E
TRX250X Fourtrax	87-88	622-1026I	622-1026E
TRX250X Fourtrax	91-92	622-1026I	622-1026E
TRX300 Fourtrax 300	88-00	622-1020I	622-1016E
TRX300EX Fourtrax 300EX	93-00	622-1026I	622-1026E
TRX300EX Sportrax300EX	01-08	622-1026I	622-1026E
TRX300FW Fourtrax 300 4x4	1988	622-1020I	622-1016E
TRX300FW Fourtrax 300 4x4	90-00	622-1020I	622-1016E
TRX400EX Fourtrax 400EX	99-00	———	———
TRX400EX Fourtrax 400EX	01-05	———	———
TRX500FA Fourman Rubicon	01-05	———	———
TRX500FGA Fourman Rubicon	04-05	———	———

Honda Dual Sport & Offroad

Model	Year	Intake No.	Exhaust No.
XL125S	79-82	622-1014I	622-1014E
XL125S	1984	622-1014I	622-1014E
XL185S	79-83	622-1014I	622-1014E
XR185	1979	622-1014I	622-1014E
XL200R	83-84	622-1014I	622-1014E
XR200	80-84	622-1014I	622-1014E
XR200R	81-83	622-1014I	622-1014E
XR200R	86-88	622-1014I	622-1014E
XR200R	90-91	622-1014I	622-1014E
XR200R	93-03	622-1014I	622-1014E
XR400R	96-04	———	———

Kawasaki Street

KZ200A1/A2	78-79	622-4012I	622-4012E
KL250A1/A1A/A2	78-79	622-610I	622-610E
KL250A3/A4	80-81	622-4011I	622-4011E
KL250C1/C2	83-84	622-4011I	622-4011E
KL250D2-D22 KLR250	85-05	622-4018I	622-4018E
KZ250D1 LTD	1980	622-4011I	622-4011E
KZ250D2 CSR	1981	622-4011I	622-4011E
KZ250L1 CSR	1982	622-4011I	622-4011E
KZ250W1 LTD	1983	622-4011I	622-4011E
EX305B1 GPz	1983	622-4020I	622-4020E
KLX400A1 KLX400SR Dual Sport	2003	———	———
KZ400B1/B2	78-79	622-604I	622-604E
KZ400H1 LTD	1979	622-604I	622-604E
EN450A LTD454	85-90	622-4018I	622-4018E
EN500A1-A7 Vulcan	90-96	622-4018I	622-4018E
EN500C1-C9F Vulcan LTD	96-09	622-4018I	622-4018E
EN500C6F-C8F Vulcan 500 LTD	06-08	622-4018I	622-4018E
EX500A1-A7 Ninja 500R	87-93	622-4018I	622-4018E
EX500D1/D2/D3 Ninja 500	94-96	622-4018I	622-4018E
EX500D4-D9F Ninja 500R	97-09	622-4018I	622-4018E
EX500D6F/D7F/D8F Ninja 500R	06-08	622-4018I	622-4018E
KZ550A1/A2/A3	80 82	———	———
KZ550C1/C2/C3/C4 LTD	80-83	———	———
KZ550D1 GPz	1981	———	———
KZ550F1 Spectre	1983	———	———
KZ550F2 LTD	1984	———	———
KZ550H1/H2 GPz	82-83	———	———
KZ550M1 LTD	1983	———	———
ZR550B1/B2/B3/B4	90-93	———	———
ZX550A1/A2 GPz	84-85	———	———
KL600A1 KLR600 Dual Sport	1984	622-615I	———
KL600B1/B2 KLR600 Dual Sport	85-86	622-615I	———
ZL600A1/A2 Eliminator	85-86	622-4023I	622-4023E
ZL600B2/B3 Eliminator	96-97	———	622-4018E
ZX600A1/A2/A3 Ninja 600R	85-87	622-4023I	622-4023E
ZX600B1 Ninja 600RX	1987	622-4023I	622-4023E
ZX600C1-C10 Ninja 600R	88-97	622-4023I	622-4023E
KL650A1-EBF KLR650	87-11	622-4015I	———
KL650A6F KLR650	2006	622-4015I	———
KL650B1/B2 Tengai KLR650	90-91	622-4015I	———
KLX650C1/C2/C3/C4 Dual Sport	93-96	622-4038I	622-4038E
KZ650B1/B2/B2A/B3	77-79	622-4008I	———
KZ650C1/C2/C3	77-79	622-4008I	———

Kawasaki Street

Model	Year	Intake No.	Exhaust No.
KZ650C1/C2/C3 Custom	77-79	622-4008I	———
KZ6501/D1A/D2 SR	78-79	622-4008I	———
KZ650E1 LTD	1980	622-4008I	———
KZ650F1	1980	622-4008I	———
VN750A2-A6F Vulcan 750	86-06	622-4017I	622-4017E
VN750A6F Vulcan 750	2006	622-4017I	622-4017E
ZI/A/B-900	73-75	622-4001I	622-4001E
KZ900A4/A5	76-77	622-4001I	622-4001E
KZ900B1 LTD	1976	622-4001I	622-4001E
ZL900A1/A2 Eliminator	85-86	622-4018I	622-4018E
ZX900A1/A2/A3 Ninja 900R	84-86	622-4018I	622-4018E
KZ1000A1/A2	77-78	622-4003I	622-4003E
KZ1000A3/A3A/A4 MKII	79-80	622-4003I	622-4003E
KZ1000B1/B2/B3/B4 LTD	77-80	622-4003I	622-4003E
KZ1000C1-C4 Police	78-81	622-4003I	622-4003E
KZ1000D1 Z1R	1978	622-4003I	622-4003E
KZ1000D3 Z1R	1980	622-4003I	622-4003E
KZ1000E1/E2 Shaft ST	79-80	622-4003I	622-4003E
KZ1000G1 LTD Classic	1980	622-4003I	622-4003E
KZ1000JI/J2/J3	81-83	622-4005I	622-4005E
KZ1000K1/K2 LTD	81-82	622-4005I	622-4005E
KZ1000M1/M2 CSR	81-82	622-4005I	622-4005E
KZ1000P1-P22 /Police	82-03	622-4005I	622-4005E
KZ1000P24 Police	2005	622-4005I	622-4005E
KZ1000RI/R2 Replica	82-83	622-4005I	622-4005E
ZG1000A1-A20 Concours	86-05	622-4018I	622-4018E
ZG1000A6F	2006	622-4018I	622-4018E
ZL1000A1 Eliminator	1987	622-4018I	622-4018E
ZX1000A1/A2 Ninja 1000R	86-87	622-4018I	622-4018E
KZ1100A1/A2/A3 Shaft	81-83	622-4005I	622-4005E
KZ1100B1/B2 GPz	81-82	622-4005I	622-4005E
KZ1100D1/D2 Spectre	82-83	622-4005I	622-4005E
KZ1100L1 LTD Shaft	1983	622-4005I	622-4005E
ZN1100B1/B2 LTD	84-85	622-4015I	622-4015E
ZX1100AI/A2 GPz	83-84	622-4015I	622-4015E
ZX1100C1/C2/C3/C4 Ninja ZX-11	90-93	622-4031I	622-4032E
VN1500A1-A9 Vulcan 88	87-90	622-4024I	622-4024E
VN1500A10/A11/A12 /A13 Vulcan1500	96-99	622-4024I	622-4024E
VN1500B1/B2/B3/B4 Vulcan 88 SE	87-90	622-4024I	622-4024E
VN1500C3/C4 Vulcan L	96-97	622-4024I	622-4024E
VN1500D1/D2 Classic	96-97	622-4024I	622-4024E
VN1500E1-E4 Classic	98-01	622-4024I	622-4024E
VN1500G1/G2/G3 Nomad	99-01	622-4024I	622-4024E
VN1500J1/J2 Drifter	99-00	622-4024I	622-4024E
VN1500L1-L4 Vulcan Nomad F.I.	00-04	622-4024I	622-4024E
VN1500N1-N3 Vulcan Classic F.I.	00-02	622-4024I	622-4024E
VN1500N4 Vulcan 1500 Classic	2005	622-4024I	622-4024E
VN1500N6F Vulcan 1500 Classic	2006	622-4024I	622-4024E
VN1500R1-R5 Vulcan 1500 Drifter	01-05	622-4024I	622-4024E
VN1500T6F Vulcan 1500 Classic	2006	622-4024I	622-4024E
VN1600A1-A8F	03-08	622-4024I	622-4024E
Vulcan 1600 Classic			
VN1600D1/D7F Vulcan 1600 Nomad	05-07	622-4024I	622-4024E
VN1600E6F Vulcan 1600 Classic	2006	622-4024I	622-4024E

Kawasaki ATV

KLT160A1	1985	622-616I	622-616E
KLF185A1-A4 Bayou	85-88	622-616I	622-616E
KLT185A1/A2 Bayou	85-86	622-616I	622-616E
KLT200A1-A4/A4A	81-83	622-4011I	622-4011E
KLT200B1	1983	622-4011I	622-4011E
KLT200C1/C2	83-84	622-4011I	622-4011E
KLF220A1-A15 Bayou 220	88-02	———	———
KLF250A1/A2/A3/A6F Bayou 250	03-06	———	———
KLT250A1/A2	82-83	622-4011I	622-4011E
KLT250C1/C2/C3	83-85	622-4011I	622-4011E
KLT250P1 Police	1984	622-4011I	622-4011E

Kawasaki ATV

Model	Year	Intake No.	Exhaust No
KSF250A1-A17 Mojave 250	87-03	622-4018I	622-4018E
KSF250A18 KFX250 Mojave	2004	622-4018I	622-4018E
KEF300A1-A6 Lakota	95-00	622-4011I	622-4011E
KEF300B1/B2/B3 Lakota Sport	01-03	622-4011I	622-4011E
KLF300A1/A2 Bayou	86-87	622-4011I	622-4011E
KLF300B1-B17 Bayou 300	88-04	622-4011I	622-4011E
KLF300C1-C16 Bayou 300 4x4	89-04	622-4011I	622-4011E
KVF300A1-A4 Prairie 3004 x4	99-02	622-4011I	622-4011E
KVF300B1-B4 Prairie 300	99-02	622-4011I	622-4011E
KVF360A1-A6F Prairie 360 4x4	03-09	———	———
KVF360B1/B2/B3/B6F Prairie 360	03-09	———	———
KVF360C1 Prairie 360 4x4	03-05	———	———
Advantage Classic			
KVF360C2/C3/C6F Prairie 360 4x4	04-10	———	———
Hardwoods Green HD			
KLF400B1-B7 Bayou 400 4x4	93-99	———	———
KSF400A1/A2/A3 KFX400	03-06	———	———
KSF400A6F KFX400	2006	———	———
KVF400A1/A2 Prairie 400 4x4	97-98	———	———
KVF400B1 Prairie 400	1998	———	———
KVF400C1-C4 Prairie 400 4x4	99-02	———	———
KVF400D1/D2/D3/D4 Prairie 400	99-02	———	———
KVF650A1/A2 Prairie 650 4x4	02-03	———	———
KVF650B1/B2 Prairie 650 4x4	02-03	———	———
Advantage Classic			
KVF650D1Brute Force 650 4x4	2005	———	———
KVF650D6F Brute Force 650 4x4	2006	———	———
KVF650E1 Brute Force 650 4x4	2005	———	———
Realtree Hardwoods Green HD			
KVF650E6F-E9F Brute Force 650 4x4	06-09	———	———
Realtree Hardwoods Green HD			
KVF650F6F Brute Force 650 4x4I	2006	———	———
KSV700A1-A9F KFX700 V-Force	04-09	———	———
KSV700B1-B9F KFX700 V-Force	04-09	———	———
KSV700C6F	2006	———	———
KVF700A1/A2/A6F Prairie 700 4x4	04-06	———	———
KVF700B1/B2 Prairie 700 4x4	04-05	———	———
Hardwoods Green HD			
KVF700D1/D6F Prairie 700 4x4	05-06	———	———
Team Green Special Edition			
KVF750A1 Brute Force 750 4x4i	2005	———	———
KVF750A6F Brute Force 750 4x4i	2006	———	———
KVF750B1 Brute Force 750 4x4i	2005	———	———
Real Tree Hardwoods Green HD			
KVF750B6F Brute Force 750 4x4i	2006	———	———
Real Tree Hardwoods Green HD			

Kawasaki Dual Sport & Offroad

KL250A1/A1A/A2	78-79	622-610I	622-610E
KL250A3/A4	80-81	622-4011I	622-4011E
KL250C1/C2	83-84	622-4011I	622-4011E
KL250D2-D22 KLR250	85-05	622-4018I	622-4018E
KLX250D2/D3/D4 KLX250R	94-96	———	———
KLX250H6F-H7F KLX250S	06-07	———	———
KLX300A2-A7F KLX300R	97-07	———	———
KLX300A6F KLX300R	2006	———	———
KLX400A1 KLX400SR Dual Sport	2003	———	———
KLX400B1 KLX400R Offroad	2003	———	———
KL600A1 KLR600	1984	622-615I	———
KL600B1/B2 KLR600	85-86	622-615I	———
KL650A1-A19 KLR650	87-05	622-4015I	———
KL650A6F KLR650 Dual Sport	06-07	622-4015I	———
KL650B1/B2 Tengai KLR650	90-91	622-4015I	———
KLX650A1/A2/A3 KLX650R	93-95	622-4038I	622-4038E
KLX650C1/C2/C3/C4 Dual Sport	93-96	622-4038I	622-4038E
KLX650D1 KLX650R	1996	622-4038I	622-4038E

Vesrah Engine Valves

Suzuki Street

Model	Year	Intake No.	Exhaust No
SP100D Dual Sport	1983	———	———
GN125Z/D	82-83	———	622-3012E
SP125Z/D Dual Sport	82-83	———	———
DR250SL-SER Dual Sport	90-95	622-3026I	622-3026E
GN250Z/D	82-83	———	———
GN250F	1985	———	———
GN250J	1988	———	———
SP250Z/D Dual Sport	82-83	———	622-406E
SP250F Dual Sport	1985	———	622-406E
DR350L/M/N/P/R/S/T/V/W/X	90-99	622-3028I	622-3028E
DR350SL-SEX Dual Sport	90-99	622-3028I	622-3028E
GS550B/C/EC/N/EN	77-79	———	622-433E
GS550ET	1980	———	622-433E
GS550LN/LT/LX/LZ	79-82	———	622-433E
GS550MZ Katana	1982	———	622-433E
GS550TX	1981	———	622-433E
GSF600ST/SV/SW/SX/SY Bandit	96-00	622-3023I	622-3023E
GSF600SK1/SK2/SK3 Bandit	01-03	622-3023I	622-3023E
GSX600FJ/FK/FL/FM Katana	88-91	622-3023I	622-3023E
GSX600FN-FV Katana	92-97	622-3034I	622-3034E
GSX600F W-K6 Katana	88-06	622-3023I	622-3023E
GSX-R600WN/WP	92-93	622-3029I	622-3029E
RF600RR/RS/RT	94-96	622-3029I	622-3029E
DR650S T-L1 Dual Sport	96-11	622-3021I	———
GS650EX/EZ	81-82	———	622-433E
GS650GX/GZ/GD	81-83	———	622-433E
GS650GLX/GLZ/GLD	81-83	———	622-433E
GS650MD Katana	1983	———	622-433E
XN85D Turbo	1983	———	622-433E
SV650 X-L0	99-10	622-3036I	———
SV650S X-L0	99-10	622-3036I	———
GS750ET/EX/EZ	80-82	622-3001I	622-3001E
GS750LT/LX	80-81	622-3001I	622-3001E
GS750TZ/TD	82-83	622-3001I	622-3001E
GSX750FK-FV Katana	89-97	622-3022I	622-3022E
GSX-R750G/H	86-87	622-3019I	622-3019E
GSX-R750RG	1986	622-3019I	622-3019E
GSX-R750J/K	88-89	622-3022I	622-3022E
GSX-R750WP/WR/WS	93-95	622-3027I	622-3027E
GSX-R750T/V/W/X	96-99	622-3038I	622-3027E
GSX-R750Y/K1-K3	00-03	622-3045I	622-3045E
RF900RR/RS/RT/RV	94-97	622-3035I	622-3027E
GS1000C/EC/N/EN/ET	78-80	———	622-3007E
GS1000GT/GLT/GX/GLX	81-82	———	622-3007E
GS1000LN	1979	———	622-3007E
GS1000SN/ST	79-80	———	622-3007E
GS1000SZ Katana	1982	622-3008I	622-3008E
GSX-R1000K1/K2/K3/K4	01-04	622-3045I	622-3045E
GS1100ET/EX/EZ/ED/ESD	80-83	622-3008I	622-3008E
GS1100GZ/GLZ/GD/GLD	82-83	———	622-3007E
GS1100GKZ/GK2/GKD/GKE	82-84	———	622-3007E
GS1100LT	1980	622-3008I	622-3008E
GS1100SD Katana	1983	622-3008I	622-3008E
GSX1100FJ-FP Katana	88-93	622-3018I	622-3018E
GSX1100GM/GN/GP Shaft	91-93	622-3018I	622-3018E
GSX-R1100G/H/J/K/L	86-90	622-3018I	622-3018E
GSX-R1100M/N	91-92	622-3032I	622-3032IE
GSX-R1100WP/WR/WS	93-95	622-3036I	622-3036E
GSX-R1100WT/WV/WW	96-98	622-3036I	622-3036E
GSF1200SV/SW/SX/SY Bandit	97-00	622-3018I	622-3018E
GSF1200S K1-K2 Bandit	01-02	622-3018I	622-3018E
GSF1200SAV Bandit 12/21	1997	622-3018I	622-3018E

Suzuki ATV

Model	Year	Intake No.	Exhaust No
ALT125D/E	83-84	622-405I	———
LT230EH/EJ/EK/EL Quadrunner	87-90	622-3016I	622-3016E
LT230EM/EN/EP Quadrunner	91-93	622-3016I	622-3016E
LT230GEF/GEG Quadrunner	85-86	622-3016I	622-3016E
LT230SF/SG/SH/SJ Quadsport	85-88	622-3016I	622-3016E
LT-F230G/H	86-87	622-3016I	622-3016E
LT250EFF/EFG Quadrunner	85-86	———	622-406E
LT-F250J/K/L/M/N/P	88-93	622-3021I	622-3016E
LT-F250R/S/T/V/W/X/Y/K1	94-01	622-3021I	622-3016E
LT-F250 K2-L2 Ozark	02-12	622-3016I	622-3016E
LT-F250FX/FY/FK1/FK2	99-02	622-3021I	622-3016E
LT-Z250 K4-K9 Quadsport	04-09	622-3016I	622-3016E
LT-4WDH/WDJ/WDK Quad 4x4	87-89	622-3021I	622-3016E
LT-4WDL/WDM/WDN Quad 4x4	90-92	622-3021I	622-3016E
LT-4WDP/WDR/WDS Quad 4x4	93-95	622-3021I	622-3016E
LT-4WDT/WDV/WDW Quad 4x4	96-98	622-3021I	622-3016E
LT300EH/EJ/EK	87-89	———	622-406E
LT-F300FX/FY/K1/K2 King Quad	99-02	622-3021I	622-3016E
LT-F4WDXM/N/P/R King Quad	91-94	622-3021I	622-3016E
LT-F4WDXS/T/V/W King Quad	95-98	622-3021I	622-3016E
LT-400K2/K3/K4 Eiger 2WD	02-03	622-3028I	622-3028E
LT-A400FK2/FK3 Eiger Auto 4WD	02-03	622-3028I	622-3028E
LT-A400F K4-K7 Eiger Auto 4WD	04-07	622-3028I	622-3028E
LT-A400FCK3 Eiger Auto 4WD	2003	622-3028I	622-3028E
LT-A400FCK4 Eiger Auto 4WD	2004	622-3028I	622-3028E
LT-A400K2-K8 Eiger Auto 2WD	02-08	622-3028I	622-3028E
LT-F400FK2/FK3/FK4 Eiger 4WD	02-04	622-3028I	622-3028E
LT-F400 K2-L0 Eiger 2WD	02-10	622-3028I	622-3028E
LT-Z400K3/K4/K5 Quad Sport	03-05	———	———
LT-A500FY/K1	00-01	622-3028I	622-3028E
LT-A500FK2/FK3 Vinson 4WD	02-03	622-3028I	622-3028E
LT-A500FK4/FCK4 Vinson 4WD	2004	622-3028I	622-3028E
LT-A500FK5/K7 Vinson 4WD	05-07	622-3028I	622-3028E
LT-F500FK3 Vinson Manual 4WD	2003	622-3028I	622-3028E
LT-F500FK4 Vinson Manual 4WD	2004	622-3028I	622-3028E
LT-F500FK5 Vinson Manual 4WD	2005	622-3028I	622-3028E
LT-F500FW/FX/FY Quadrunner	98-00	622-3028I	622-3028E
LT-F500FK1/FK2 Quadrunner	01-02	622-3028I	622-3028E

Suzuki Dual Sport & Offroad

DR100D/E	83-84	———	———
SP100D Dual Sport	1983	———	———
DR125Z/D/E	82-84	———	———
SP125Z/D Dual Sport	82-83	———	———
DR250Z/D	82-83	———	622-406E
DR250F	1985	———	622-406E
DR250L/M/N/P	90-93	622-3026I	622-3026E
DR250SL-SER Dual Sport	90-95	622-3026I	622-3026E
SP250Z/D Dual Sport	82-83	———	622-406E
SP250F Dual Sport	1985	———	622-406E
DR350L/M/N/P/R/S/T/V/W/X	90-99	622-3028I	622-3028E
DR350SL-SEX Dual Sport	90-99	622-3028I	622-3028E
DR-Z400Y/K1/K2/K3/K4/K5	00-04	———	———
DR-Z400EY-K6	00-06	———	———
DR-Z400SY-L0 Dual Sport	00-12	———	———
DR650SET-L1 Dual Sport	96-11	622-3021I	———

Yamaha Street

Model	Year	Intake No.	Exhaust No.
SR185H/J Exciter	81-82	622-2013I	622-2013E
XS360C/D/2D	76-77	622-235I	622-235E
XS400D/E/2E/F/2F	77-79	622-235I	622-235E
XS400G/H Special II	80-81	622-235I	622-235E
XS400SG/SH Special	80-81	622-235I	622-235E
XS400SJ Heritage Special	1982	622-235I	622-235E
XS400J/K Maxim	82-83	622-201I	622-201E
XS400RJ/RK Seca	82-83	622-201I	622-201E
SR500E/F/G/H	78-81	622-2011I	622-2007E
XJ550H/J/K Maxim	81-83	622-205I	622-205E
XJ550RH/RJ/RK Seca	81-83	622-205I	622-205E
XZ550RJ/RK Vision	82-83	622-236I	622-205E
XJ650G/H/J/K Maxim	80-83	622-2004I	622-2004E
XJ650LH Midnight Maxim	1981	622-2004I	622-2004E
XJ650LJ/LK Seca Turbo	82-83	622-2004I	622-2004E
XJ650RJ Seca	1982	622-2004I	622-2004E
XJ750J/K Maxim	82-83	622-2004I	622-2004E
XJ750MK Midnight Maxim	1983	622-2004I	622-2004E
XJ750RH/RJ/RK Seca	81-83	622-2004I	622-2004E
XS750D/2D/E/F	77-79	622-201I	622-201E
XS750SE/SF Special	78-79	622-201I	622-201E
XV750H/J/K Virago	81-83	———	———
XV750MK Midnight Virago	1983	———	———
XV750U/UC-G/GC Virago	88-95	———	———
XV750H1/HC1-K1/KC1 Virago	96-98	———	———
XS850G/H	80-81	622-201I	622-201E
XS850LG/LH Midnight Special	80-81	622-201I	622-201E
XS850SG/SH Special	80-81	622-201I	622-201E
XV920J/K Virago	82-83	622-2011I	622-2011E
XV920MK Midnight Virago	1983	622-2011I	622-2011E
XV920RH/RJ	81-82	622-2011I	622-2011E
XV1000L/LC/N/NC Virago	84-85	622-2011I	622-2011E
XJ1100J Maxim	1982	622-203I	622-203E
XS1100E/F	78-79	622-201I	622-201E
XS1100G/H	80-81	622-203I	622-203E
XS1100LG/LH Midnight Special	80-81	622-203I	622-203E
XS1100SF Special	1979	622-201I	622-201E
XS1100SG/SH Special	80-81	622-203I	622-203E
XV1100S/SC-L/LC Virago	86-99	622-2011I	622-2011E
XV1100SH/SHC-SK/SKC Virago	96-98	622-2011I	622-2011E
XVS1100AM/AMC-AS/ASC	00-04	622-2011I	622-2011E
V-Star 1100 Classic			
XVS1100AT T/TC-Y/YC	03-09	622-2011I	622-2011E
V-Star 1100 Silverado			
XVS1100AW T/TC-Y/YC	03-09	622-2011I	622-2011E
V-Star 1100 Classic			
XVS1100L/LC-T/TC	99-05	622-2011I	622-2011E
V-Star 1100 Custom			
VMX12N/NC-W1/W1C V-Max	85-07	622-2019I	622-2019E

Yamaha ATV

YFM200N Moto-4	1985	622-2013I	622-2013E
YFM200DXS-DXW Moto-4	86-89	622-2013I	622-2013E
YTM200K/L/N Tri-Moto	83-84	622-2013I	622-2013E
YTM200N Tri-Moto	1985	622-2013I	622-2013E
YFM225S/T/U Moto-4	86-88	622-2013I	622-2013E
YTM225DRN/DRS Tri-Moto	85-86	622-2013I	622-2013E
YTM225DXK/DXL/DXN Tri-Moto	83-85	622-2013I	622-2013E
YTM200EK/EL/ERN Tri-Moto	83-85	622-2013I	622-2013E
YFB250D/E/F/G/H Timberwolf	92-96	622-2013I	622-2013E
YFB250FWF-FWMC Timberwolf	94-00	622-2013I	622-2013E
YFB250UH/UJ/UK Timberwolf	96-98	622-2013I	622-2013E
YFM250W/A/B Moto-4	89-91	622-2013I	622-2013E
YFM250M/MC Beartracker	2000	622-2013I	622-2013E
YFM250XL/XLC-XS Beartracker	99-04	622-2013I	622-2013E
YFM350S Raptor	2004	622-2020I	622-2020E
YFM350RSET/RESV Raptor 350 SE	05-06	622-2020I	622-2020E

Yamaha ATV

Model	Year	Intake No.	Exhaust No
YFM350R T-Y Raptor	05-09	622-2020I	622-2020E
YFM350FAS/FAT Bruin 350 4x4	04-06	622-2020I	622-2020E
YFM350FAHS Bruin 350 Auto	2004	622-2020I	622-2020E
4x4 Hardwood Camo			
YFM350FXP/FXR Wolverine	02-03	622-2020I	622-2020E
YFM350XT-XS/XSC Warrior	87-04	622-2020I	622-2020E
YFM350AS/AT Bruin 350 Auto 2WD	04-05	622-2020I	622-2020E
YFM350BAT/BAV Bruin 350 2WD	05-06	622-2020I	622-2020E
YFM350FAS/FAT Bruin 350 4WD	05-06	622-2020I	622-2020E
YFM350FAV-B Bruin 350 4WD	2006	622-2020I	622-2020E
YFM350FAV Bruin 350 4WD	2006	622-2020I	622-2020E
YFM350FAHS/T/V Bruin 4WD	04-06	622-2020I	622-2020E
YFM350FXG-FXN/FXNC Wolverine	95-01	622-2020I	622-2020E
YFM350FXS/FXT Wolverine	04-05	622-2020I	622-2020E
YFU1TW/YFU1W Pro-Hauler	1989	622-2013I	622-2013E
YFM400S Big Bear 400 2WD	2004	622-2020I	622-2020E
YFM400P Big Bear 400 2WD	2002	622-2020I	622-2020E
YFM400AM/AMC Kodiak2WD	2000	622-2020I	622-2020E
YFM400AR Kodiak4WD	2003	622-2020I	622-2020E
YFM400FM/FMC Big Bear 4WD	2000	622-2020I	622-2020E
YFM400FP Big Bear 4WD	2001	622-2020I	622-2020E
Real Tree			
YFM400FAM/FAMC/N/P/R/RB	00-03	622-2020I	622-2020E
Kodiak 4WD Auto			
YFM400FAHM/MC/N/NC Kodiak	00-01	622-2020I	622-2020E
YFM400FHP Big Bear 400 4WD	2002	622-2020I	622-2020E
YFM400FHAP Kodiak 4x4 Hunter	2002	622-2020I	622-2020E
YFM400FWE-FWL/FWLC Kodiak	93-90	622-2020I	622-2020E
YFM400FWR Big Bear	2003	622-2020I	622-2020E
YFM400FWAHM/MC Kodiak 4WD	2000	622-2020I	622-2020E
Realtree			
YFM400FWNM/MC/N Big Bear 4WD	00-01	622-2020I	622-2020E
YFM400FWNHM/MC/N Big Bear	00-01	622-2020I	622-2020E
Buckmaster			
YFM400HP Big Bear 2WD	2002	622-2020I	622-2020E
YFM400NM/NMC/N Big Bear 2WD	00-01	622-2020I	622-2020E
YFM400NR Big Bear 2WD	2003	622-2020I	622-2020E
YFM400NHN Big Bear 2WD	2001	622-2020I	622-2020E

Yamaha Dual Sport & Offroad

BW200N/S Big Wheel	85-86	622-2013I	622-2013E
BW200ES/ET/EU Big Wheel	86-88	622-2013I	622-2013E
TW200T/TC-B1 Trailway	87-12	622-2013I	622-2013E
XT200J/K/KC Dual Sport	82-83	622-2013I	622-2013E
TT225S/T	86-87	622-2013I	622-2013E
TT225L/LC/RM/RMC	99-00	622-2013I	622-2013E
TT-R225N/NC/P/PC/R/RC/S	01-04	622-2013I	622-2013E
XT225D/DC-V/VC Serrow	92-07	622-2013I	622-2013E
TTR-230 T/TC-B	05-12	622-2013I	622-2013E
WR400FK/FL/FM	98-00	———	———
YZ400FK/FL	98-99	———	———
WR426FN/FP	01-02	———	———
YZ426FM/FN/FP	00-02	———	———
TT500C/D/E/F/G/H	76-81	———	622-2007E
XT500C/D/E/F/G/H Dual Sport	76-81	———	622-2007E
XT550J/K Dual Sport	82-83	622-208I	———

Vesrah Engine Valves

Sudco Part Number to OEM Cross Reference

Honda

OEM Reference	Dimension- Head x Stem x Overall	Vesrah Reference	Order No.
14711-MB0-000	26.00 x 5.50 x 89.70mm	GG-1001-IN	622-030I
14721-MB0-000	23.00 x 5.50 x 89.40mm	GG-1001-IN	622-030E
14711-300-005	32.00 x 6.60 x 102.50mm	GG-1002-IN	622-1002I
14721-300-005	28.00 x 6.60 x 102.50mm	GG-1002-EX	622-1002E
14711-MA4-770	25.00 x 5.50 x 90.00mm	GG-1003-IN	622-1003I
14721-422-000	22.00 x 5.50 x 88.70mm	GG-1003-EX	622-1003E
14711-438-000	26.00 x 5.50 x 90.00mm	GG-1006-IN	622-1006I
14721-438-000	22.60 x 5.50 x 88.70mm	GG-1006-EX	622-1006E
14711-440-003	30.00 x 5.50 x 92.00mm	GG-1014-IN	622-1014I
14711-437-000	30.00 x 5.50 x 92.00mm	GG-1014-IN	622-1014I
14721-437-000	25.00 x 5.50 x 91.50mm	GG-1014-EX	622-1014E
14711-HA0-003	32.00 x 5.50 x 91.30mm	GG-1016-IN	622-1016I
14721-HA0-003	28.00 x 5.50 x 89.95mm	GG-1016-EX	622-1016E
14711-440-003	30.00 x 5.50 x 92.00mm	GG-1020-IN	622-1020I
14711-HB3-770	30.50 x 5.50 x 85.90mm	GG-1024-IN	622-1024I
14721-HB3-000	25.00 x 5.50 x 84.80mm	GG-1024-EX	622-1024E
14711-HC0-000	25.50 x 5.50 x 93.50mm	GG-1026-IN	622-1026I
14721-HC0-000	25.50 x 5.50 x 93.00mm	GG-1026-EX	622-1026E

Kawasaki

12004-012	36.00 x 7.00 x 91.68mm	GG-4001-IN	622-4001I
12005-005	30.00 x 7.00 x 90.19mm	GG-4001-EX	622-4001E
12004-1010	36.00 x 7.00 x 91.68mm	GG-4003-IN	622-4003I
12005-1009	30.00 x 7.00 x 90.19mm	GG-4003-EX	622-4003E
12004-1013	37.00 x 7.00 x 64mm	GG-4005-IN	622-4005I
12005-1011	32.00 x 7.00 x 89.14mm	GG-4005-EX	622-4005E
12004-1001	35.00 x 7.00 x 94.49mm	GG-4006-IN	622-604I
12005-1001	35.00 x 7.00 x 93.03mm	GG-4006-EX	622-604E
12004-1011	33.00 x 7.00 x 92.80mm	GG-4008-IN	622-4008I
12005-008	28.00 x 7.00 x 92.50mm	GG-4008-EX	———
12004-1016	28.00 x 5.50 x 91.30mm	GG-4009-IN	622-4009I
12004-1123	31.00 x 7.00 x 100.70mm	GG-4011-IN	622-4011I
12004-1137	31.00 x 7.00 x 100.70mm	GG-4011-IN	622-4011I
12005-1275	31.00 x 7.00 x 99.00mm	GG-4011-EX	622-4011E
12005-1005	31.00 x 7.00 x 99.00mm	GG-4011-EX	622-4011E
12004-018	36.00 x 7.00 x 100.50mm	GG-4012-IN	622-610I
12005-010	30.00 x 7.00 x 99.00mm	GG-4012-EX	622-610E
12004-1087	38.00 x 7.00 x 91.14mm	GG-4015-IN	622-4015I
12005-1016	32.50 x 7.00 x 88.50mm	GG-4015-EX	622-4015E
12004-1061	32.00 x 5.50 x 90.22mm	GG-4017-IN	622-4017I
12005-1064	28.00 x 5.50 x 90.09mm	GG-4017-EX	622-4017E
12004-1085	29.00 x 5.50 x 89.09mm	GG-4018-IN	622-4018I
12004-1079	29.00 x 5.50 x 89.09mm	GG-4018-IN	622-4018I
12005-1052	24.70 x 5.50 x 87.16mm	GG-4018-EX	622-4018E
12004-1086	38.00 x 7.00 x 90.64mm	GG-4019-IN	622-615I
12004-1051	30.00 x 5.50 x 89.20mm	GG-4020-IN	622-616I
12005-1051	26.00 x 5.50 x 88.50mm	GG-4020-EX	622-616E
12004-1075	21.50 x 5.00 x 80.60mm	GG-4023-IN	622-4023I
12004-1065	21.50 x 5.00 x 80.60mm	GG-4023-IN	622-4023I
12005-1062	19.00 x 5.00 x 79.30mm	GG-4023-EX	622-4023E
12004-1072	33.00 x 7.00 x 101.25mm	GG-4024-IN	622-4024I
12005-1268	33.00 x 7.00 x 101.25mm	GG-4024-EX	622-4024E
12004-1115	31.60 x 5.00 x 89.10mm	GG-4031-IN	622-4031I
12005-1240	27.00 x 5.00 x 88.83mm	GG-4031-EX	622-4031E
12004-1188	38.00 x 7.00 x 92.17mm	GG-4038IN	622-4038I
12005-1188	33.00 x 7.00 x 91.40mm	GG-4038-EX	622-4038E

Suzuki

12911-45410	23.00 x 5.50 x 88.30mm	GG-3001-IN	622-3001I
12912-45410	20.00 x 5.50 x 87.90mm	GG-3001-EX	622-3001E
12912-47011	27.00 x 7.00 x 85.56mm	GG-3006-IN	622-433E
12911-49020	38.00 x 7.00 x 90.90mm	GG-3007-IN	622-3007I
12912-49020	38.00 x 7.00 x 89.10mm	GG-3007-EX	622-3007E
12911-49220	27.00 x 5.50 x 86.50mm	GG-3008-IN	622-3008I

Sudco Part Number to OEM Cross Reference

Suzuki

OEM Reference	Dimension- Head x Stem x Overall	Vesrah Reference	Order No.
12912-49220	27.00 x 5.50 x 86.50mm	GG-3008-EX	622-3008E
12911-05211	30.00 x 5.50 x 90.30mm	GG-3012-IN	622-405I
12912-38201	22.00 x 5.50 x 93.38mm	GG-3013-EX	622-406E
12911-31300		GG-3015-IN	622-408I
12912-31301		GG-3015-EX	622-408E
12911-18A00	32.00 x 5.50 x 88.66mm	GG-3016-IN	622-3016I
12911-05G00	32.00 x 5.50 x 88.66mm	GG-3016-IN	622-3016I
12912-18A00	28.00 x 5.50 x 87.84mm	GG-3016-EX	622-3016E
12911-06B02	28.50 x 5.00 x 85.60mm	GG-3018-IN	622-3018I
12912-06B00	25.00 x 5.00 x 84.99mm	GG-3018-EX	622-3018E
12911-27A03	26.00 x 5.00 x 88.17mm	GG-3019-IN	622-3019I
12912-27A01	24.00 x 5.00 x 87.74mm	GG-3019-EX	622-3019E
12911-19B00	33.00 x 5.50 x 88.57mm	GG-3021-IN	622-3021I
12911-17C02	28.00 x 5.00 x 87.42mm	GG-3022-IN	622-3022I
12912-17C00	25.00 x 5.00 x 86.73mm	GG-3022-EX	622-3022E
12911-19C00	23.00 x 5.00 x 88.67mm	GG-3023-IN	622-3023I
12912-19C00	20.00 x 5.00 x 88.42mm	GG-3023-EX	622-3023E
12911-17E00	27.00 x 4.50 x 96.46mm	GG-3027-IN	622-3027I
12912-17E01	24.00 x 4.50 x 96.71mm	GG-3027-EX	622-3027E
12911-14D01	30.60 x 5.00 x 93.05mm	GG-3028-IN	622-3028I
12911-14D10	30.60 x 5.00 x 93.05mm	GG-3028-IN	622-3028I
12912-14D01	27.00 x 5.00 x 92.55mm	GG-3028-EX	622-3028E
12911-18E00	25.50 x 4.50 x 96.96mm	GG-3029-IN	622-3029I
12912-18E00	25.50 x 4.50 x 97.01mm	GG-3029-EX	622-3029E
12911-41C00	28.50 x 5.00 x 87.84mm	GG-3032-IN	622-3032I
12912-41C00	25.00 x 5.00 x 87.17mm	GG-3032-EX	622-3032E
12911-19E00	23.00 x 5.00 x 90.85mm	GG-3034-IN	622-3034I
12912-19E00	20.00 x 5.00 x 90.60mm	GG-3034-EX	622-3034E
12911-31E00	28.00 x 4.50 x 96.80	GG-3035-IN	622-3035I
12911-46E00	31.00 x 4.50 x 94.66mm	GG-3036-IN	622-3036I
12912-46E00	27.00 x 4.50 x 94.41mm	GG-3036-EX	622-3036E
12911-33E00	29.00 x 4.50 x 96.11mm	GG-3038-IN	622-3038I
12911-35F00	29.00 x 4.00 x 95.43mm	GG-3045-IN	622-3045I
12912-35F00	24.00 x 4.00 x 95.56mm	GG-3045-EX	622-3045E

Yamaha

1J7-12111-01-00	36.00 x 7.00 x 96.00mm	GG-2001-IN	622-201I
12R-12111-00-00	36.00 x 7.00 x 96.00mm	GG-2001-IN	622-201I
1J7-12121-00-00	31.00 x 7.00 x 95.00mm	GG-2001-EX	622-201E
12R-12121-00-00	31.00 x 7.00 x 95.00mm	GG-2001-EX	622-201E
4X7-12111-00-00	43.00 x 8.00 x 104.00mm	GG-2003-IN	622-2003I
4H7-12111-10-00	33.00 x 7.00 x 94.20mm	GG-2004-IN	622-2004I
4H7-12121-10-00	28.00 x 7.00 x 94.10mm	GG-2004-EX	622-2004E
583-12121-00-00	39.00 x 8.00 x 101.20mm	GG-2007-EX	622-2007E
1L9-12111-03-00	35.50 x 7.00 x 97.70mm	GG-2008-IN	622-235I
1L9-12121-02-00	30.00 x 7.00 x 96.90mm	GG-2008-EX	622-235E
3H5-12111-01-00	38.00 x 7.00 x 95.00mm	GG-2009-IN	622-203I
3H5-12121-00-00	32.00 x 7.00 x 93.50mm	GG-2009-EX	622-203E
11H-12111-00-00	38.00 x 7.00 x 95.00mm	GG-2010-IN	622-236I
2J2-12111-01-00	47.00 x 8.00 x 102.30mm	GG-2011-IN	622-2011I
5A8-12121-00-00	39.00 x 8.00 x 101.20mm	GG-2011-EX	622-2011E
5H0-12111-02-00	34.00 x 6.00 x 93.80mm	GG-2013-IN	622-2013I
5H0-12121-01-00	28.50 x 6.00 x 92.50mm	GG-2013-EX	622-2013E
4U8-12111-00-00	30.00 x 6.00 x 89.40mm	GG-2014-IN	622-205I
4U8-12121-00-00		GG-2014-EX	622-205E
5Y1-12111-00-00	30.00 x 6.00 x 89.40mm	GG-2017-IN	622-208I
1FK-12111-01-00	30.50 x 5.50 x 87.95mm	GG-2019-IN	622-2019I
1FK-12121-01-00	25.00 x 5.50 x 86.95mm	GG-2019-EX	622-2019E
1UY-12111-01-00	40.00 x 7.00 x 102.60mm	GG-2020-IN	622-2020I
1UY-12121-01-00	34.00 x 7.00 x 100.50mm	GG-2020-EX	622-2020E

APE Engine Valves

APE stainless steel valves are precision manufactured from aircraft quality Inconel based stainless steel. This special material offers excellent resistance to heat and distortion.

**These valves are very high tensile strength SAE HNV3 steel, used because the factory seats on these models are too hard to get good valve face life with stainless steel.

Honda

Application	Year	Type	Dimension Head x Stem x Overall	APE Reference	Order No.
CRF450R	07-08	Exhaust Valve	30 x std. x 84.25mm	98801	875-835
CRF450R	02-06	Exhaust Valve	31 x 4.965 x 84.25mm	98308	875-836
CRF450R	02-08	Intake Valve	36 x 5.49 x 84.6mm	98305**	875-840
CRF250R	04-07	Exhaust Valve	26 x 4.97 x 82.15mm	98329	875-845
CRF250R	04-07	Intake Valve	31.1 x 4.98 x 83.40mm	98331	875-850

Honda

Honda SOHC K Models Stainless Steel valves with hard chrome stems. These valves were developed by APE for use in the restoration of the famed RC Engineering tap fuel drag bikes. Premium grade heat resistant Stainless steel. Stems are hard chromed and precision ground, for maximum wear resistance.

Application	Type	Dimension	APE Reference	Order No.
SOHC 750K	Exhaust Valve	28mm	98508	875-865
SOHC 750K	Exhaust Valve	28.5mm	98507	875-866
SOHC 750K	Intake Valve	32mm	98506	875-870
SOHC 750K	Intake Valve	33mm	98505	875-871

Suzuki

APE carries the largest selection of super high performance stainless steel valves. Available in standard and oversize head diameter. All stems are hard chromed for excellent wear. True high performance valves for less than factory OEMs.

Application	Type	Dimension	APE Reference	Order No.
Hayabusa	Exhaust Valve	27.5mm STD	98151	875-825
Hayabusa	Exhaust Valve	28.5mm	98152	875-826
Hayabusa	Intake Valve	33mm STD	98153	875-830
Hayabusa	Intake Valve	34mm	98154	875-831

Kawasaki

Stainless Steel with chrome stems.

Application	Type	Dimension	APE Reference	Order No.
ZX14	Exhaust Valve	28.5mm STD	98502	875-855
ZX14	Exhaust Valve	29.5mm	98509	875-856
ZX14	Intake Valve	33.4mm STD	98503	875-860
ZX14	Intake Valve	3.44mm	98504	875-861

APE High Performance Valve Guides

APE valve guides are made from special bronze alloy to resist wear and heat. Precision machined with the bores finished to size. They are designed to fit lower in the cylinder head to clear high lift cams, and use APE seals or factory OEM seals. Sold in sets for models listed.

Honda

Model	Year	APE No.	Order No.
750 SOHC	69-78	VGH750	875-200

Kawasaki

KZ650 thru KZ1100	2-Valve	VGK900	875-210
ZX1000 Ninja ZX10	88-90	VGK1100K	875-211
ZX1100 Ninja ZX11	90-01	VGK1100K	875-211

Suzuki

GS750/1100/1150	4 valve	VGS1100S	875-220
GSXR750/1100	thru 1992	VG750GSX	875-221
GSXR750W	93-95	VG1100GSX	875-222
GSXR1100W	93-98	VG1100GSX	875-222
GSX1300R Hayabusa	99-	VG1300GSX	875-223

Yamaha

FJ1100	84-85	VGY110	875-230
FJ1200	86-93	VGY110	875-230

Specials (oversize)

Application	Size	APE No.	Order No.
Kawasaki Z1/KZ1000/GPZ1100	004"	99101-4	875-240
Kawasaki Z1/KZ1000/GPZ1100	025"	99101-25	875-241
oversize repair guide (.502 dia)			
Suzuki GS guide with GSXR O.D		VGGSXR55	875-247

APE Performance Products

Heavy Duty Cylinder Head Studs

Heavy duty cylinder studs are necessary to prevent head gasket leakage in high compression and turbocharged engines. Stock studs are made from poor material that will stretch and allow gasket leakage. APE studs are made from heat treated chrome moly and have rolled threads for maximum strength. Sold in sets.

Honda			
CB750 SOHC	thru 78	CS750H	875-140
Kawasaki			
KZ650/KZ750 2 valve fours		CS650K	875-100
KZ900/KZ1000/KZ1100		CS900K	875-102
ZX11/10/1000 Ninja***		CS1100K	875-103
ZX12		CS1200K	875-104
Suzuki			
GS1150		CS1150S	875-122
GSXR1100, 1127cc case (40mm starter hole)		CS1127GSX	875-125
GSXR1100W ***	93-98	CS1100GSXW	875-126
GSX1300R Hayabusa***		CS1300GSX	875-127
SV650	all	CS650S	875-128
Yamaha			
YZF-R1	CS1000R1		875-163
FJ1100/FJ1200	CS1100FJ		875-164

***Must use Heavy Duty Cylinder Head Nuts

Heavy Duty Cylinder Head Nuts

Super heat treated cylinder head nuts are a must for high output engines. Help prevent blown and leaking head gaskets caused by the threads in the soft stock nuts stretching. APE nuts are machined from alloy steel and fully heat treated for maximum strength. Nuts are .150" taller than stock to prevent the nut from bottoming out on the stud when the head has been milled. **Note:** Packed in complete engine sets.

Description	Order No.
10mm x 1.25 with 7/8 base dia. Kawasaki KZ900/1000/1100 Suzuki GS1100/1150 GSXR750/1100 oil-cooled	875-050 (APE#: CHN1000K)
10mm x 1.25 with 3/4" base dia. For use with any application requiring the smaller 3/4" base dia. Including **875-126.**	875-051 (APE#: CHN1100GSXW)
Special head nuts for use with **875-105** stud set	875-053 (APE#: CHN1000TF)
Complete cylinder head nuts for **875-128** (10 pcs)	875-055 (APE#: CHN10125-10)
Complete cylinder head nuts for **875-128** (8 pcs)	875-054 (APE#: CHN10125-8)

APE Kawasaki Cam Chain Idler Adapter

This adapter allows the use of later model GPz 1100 or KZ1000J cylinder head on earlier model KZ900/KZ1000 lower end. It maintains the roller style cam chain. This is the only modification necessary to install the big valve head on early motor. Use with OEM KZ sprockets or high performance aftermarket versions.

Description	APE No.	Order No.
Cam Chain Idler Adapter with Pin	CCIA	875-450

Three Bond Anaerobic Thread Locks

No matter what locking properties are required, one of Three Bond's thread lock products will get the job done. All of Three Bond's thread lock inhibit the development of rust, leaks, corrosion and are not affected by oils, chemicals, salt water, various gases or organic solvents.

Description	Three Bond Ref.	Order No.
Low Strength: Frequent Removal	TB1342 10ml	800-120
Medium Strength: Bearing & Stud	TB1333 10ml	800-124
High Temp: Extreme Temperature	TB1360 10ml	800-128

APE High Performance Valve Springs

APE valve guides are made from special bronze alloy to resist wear and heat. Precision machined with the bores finished to size. They are designed to fit lower in the cylinder head to clear high lift cams, and use APE seals or factory OEM seals. Sold in sets for models listed.

APE Titanium Valve Spring Retainers

APE valve spring retainers are machined from aircraft quality titanium bar stock in the APE plant on the latest state of the art computerized CNC machinery. Sold in sets for models listed.

Application Order	Use	Street	APE Spring. No	Spring Order. No	APE Retainer No.	Retainer No.
Honda 750 SOHC thru '78	street/race (TQ Midgets)	stock	VS750H	875-330	TVSRH750 (K model)	875-390
Kawasaki ZX7 '91-'95 kit type	Race		———	———	TVSRK750	875-370
Kawasaki ZX7 '96-'99			VS750K	875-300	TVSRK750-96	875-371
Kawasaki ZX9 '98-'00			———	———	TVSRK750-96	875-371
Kawasaki 650 thru 1100 2 valve	up to .460" lift	stock	VS900K	875-301	TVSRK1000 (sob)	875-372
Kawasaki 900 thru 1100 2 valve	.460" .510" lift		VSP500	875-302	TVSRK1000 (sob)	875-372
Kawasaki/Suzuki 2 Valve race	up to .540" lift		VSP520	875-303	TVSRK1000 (sob)	875-372
Kawasaki Ninja 900/1000	includes bases	stock	VS908KS	875-305	———	———
Kawasaki ZX10/ZX11	includes bases	stock	VS1100K	875-306	TVSRK1100	875-374
Kawasaki ZX12	65 lbs seat pressure		VS1200K	875-307	———	———
Suzuki GS1100/1150	street/race	stock	VS1100S	875-320	TVSRS1100	875-378
Suzuki GS1100/1150 pro race	60# @ 1.250", .460" lift		VS1100S-PRO	875-321	TVSRS750	875-379
Suzuki GSXR750 86-90	street/race	stock	VS750GSX	875-322	TVSRS750	875-379
Suzuki GSXR750 '91-'92 (shim style)	street/race VSA204 shims req'd		———	———	TVSRS750SH	875-380
Suzuki GSXR750W '93-'95	street/race		———	———	TVSR1100SX	875-381
Suzuki GSXR750T '96-'99	street/race		———	———	TVSRS750-96	875-382
Suzuki GSXR1100 '93-'99	street/race	stock	———	———	TVSR1100GSX	875-383
Suzuki GSXR1300 Hayabusa	w/ stock springs		———	———	TVSR1300GSX	875-384
Suzuki GSXR1300 Hayabusa 45 lbs of seat pressure with a .015"shim	race w/ APE springs		VS1300GSX	875-325	TVSR1300PRO	875-385
Suzuki GS550 thru 1000 2 valves	street/race	stock	VS1100S	875-320	TVSRK1000 (sob)	875-373
High seat pressure (65lbs) for high lift	cams or high boost turbo		VS1300GSX-2	875-327		
Yamaha FJ1100/1200	street/race/legends	stock	VS1100FJ	875-341	TVSR1100Y (sob)	875-397
Triumph Daytona 4-cylinder	street/race	stock	VS1200T	875-350	———	———

Motion Pro

Motion Pro Valve Spring Compressor

Improved quick action design, used in same applications as Honda tool 07757-0010000 and Kowa tool AKS-215-1010 OEM tools. Accepts Motion Pro adapters (08-0248) as well as Honda OEM

Order No. 950-772

For use in shim under bucket and small diameter valve spring keeper applications, both cup-type and ball-type tips are included. Adapter on compressor is double stepped. The inner step diameter is 17mm - Outer step diameter is 21mm.

Cam Chain Tensioners

875-405

875-789

APE Manual Cam Chain Tensioners

A Must for any kind of performance riding. APE manual cam chain tensioners are CNC machined from billet alloy to exact tolerances for perfect fit. Designed to replace the automatic and hydraulic tensioners on high performance engines. The automatic adjusters can back out when the throttle is suddenly closed at high rpm. This allows the cams to go momentarily out of time and can result in bent valves and/or serious engine damage. Hydraulic tensioners have a tendency to put too much tension on the chain guide under high rpm/high oil pressure conditions resulting in premature wear. Both problems can be eliminated with the installation of the APE manual cam chain tensioner. No matter what the engine does, the cam chain tensioner will remain constant. Cam Chain Tensioners are sold each.

Cam Chain Tensioner Model	Year	APE No.	Order No.	*Cam Chain Tensioner Gasket* Cometic No.	Order No.
Honda Street					
CBR600F Hurricane	86-90	HT600	875-425	use OEM	———
CBR600F2 Hurricane	91-94	HT600	875-425	use OEM	———
CBR600F3 Hurricane	95-98	HT900	875-426	EC388	875-784
CBR600F4	99-00	HT900	875-426	EC388	875-784
CBR600F4I		HT900	875-426	EC388	875-784
CBR600RR	03-11	HT600RR	875-430	EC814	875-788
CB900F (919)	03-05	HT900	875-426	EC388	875-784
CBR900RR	93-99	HT900	875-426	EC388	875-784
CBR929RE	2001	HT929	875-427	EC631	875-786
CBR929RR	00-01	HT929	875-427	EC631	875-786
CBR954RR	02-03	HT929	875-427	EC631	875-786
CBR1000RR	04-06	HT600RR	875-430	EC814	875-788
VTR1000F Super Hawk (*qt2 required)	98-05	HT1000VTR	875-429*	EC388	875-784*
CBR1100XX Blackbird	97-03	HT900	875-426	EC388	875-784
Honda Offroad					
CRF150R	07-09, 12	HT250	875-431	EC377	875-783
CRF250R/CRF250X	04-12	HT250	875-431	EC377	875-783
CRF450R	04-08	HT450	875-432	EC377	875-783
CRF450R	09-12	HT250	875-431	EC377	875-783
TRX450R (ATV)	04-05	HT900	875-426	EC388	875-784
TRX450R (ATV)	06-09	HT450	875-432	———	———
XR650R		HT929	875-427	———	———
Kawasaki Street					
EX250	08-11	KT250	875-422	———	———
KTR250		KT900	875-419	———	———
EX500	All	KT1050	875-415	———	———
EN500 Vulcan 500	1995	KT1050	875-415	———	———
ZX600A Ninja 600R	85-87	KT1100	875-416	comes with o-ring	———
ZX600C	88-97	KT1100	875-416	comes with o-ring	———
ZX600F/G/J Ninja ZX-6R	95-12	KT750	875-417	———	———
ZX636B/C/D Ninja ZX-6R	03-06	KT750	875-417	———	———
ZX-6RR 636	00-04	KT750	875-417	———	———
GPz750	83-85	KT1000	875-418	———	———
VN750A Vulcan 750 (*qt2 required)	86-03	KT1100	875-416*	comes with o-ring	———
ZX750H1/H2 Ninja ZX-7	89-90	KT1100	875-416	comes with o-ring	———
ZX750J1/J2 Ninja ZX-7	91-92	KT750	875-417	———	———
ZX750K1/K2 Ninja ZX-7R	91-02	KT750	875-417	———	———
ZX750L1/L2/L3 Ninja ZX-7	93-95	KT750	875-417	———	———
ZX750M1/M2 Ninja ZX-7R	93-94	KT750	875-417	———	———
ZX750P1-P8 Ninja ZX-7R	96-03	KT750	875-417	———	———
KZ900A4/A5	76-77	KT1000	875-418	EC067	875-782
KZ900B1 LTD	1976	KT1000	875-418	EC067	875-782
Z1/A/B-900	73-75	KT1000	875-418	EC067	875-782
ZX900A Ninja 900R	84-86	KT1050	875-415	———	———
ZX900B Ninja ZX-9R	94-97	KT750	875-417	———	———
ZX900C/E/F Ninja ZX-9R	98-05	KT900	875-419	———	———
KZ1000A1/A2/A2A	77-78	KT1000	875-418	EC067	875-782
KZ1000A3/A3A/A4 MKII	79-80	KT1000	875-418	EC067	875-782
KZ1000B1/B2/B3/ B4 LTD	77-80	KT1000	875-418	EC067	875-782
KZ1000C1/C1A/C2/C3/C4 Police	78-81	KT1000	875-418	EC067	875-782
KZ1000D1 Z1R	1978	KT1000	875-418	EC067	875-782
KZ1000D3 Z1R	1980	KT1000	875-418	EC067	875-782
KZ1000E1/E2 Shaft ST	79-80	KT1000	875-418	EC067	875-782
KZ1000J	81-83	KT1100	875-416	comes with o-ring	———

Cam Chain Tensioners

Kawasaki Street

Cam Chain Tensioner Model	Year	APE No.	Order No.	Cam Chain Tensioner Gasket Cometic No.	Order No.
KZ1000P Police	81-04	KT1100	875-416	comes with o-ring	———
ZX1000A Ninja 1000R	86-87	KT1050	875-415	———	———
ZX1000B1/B2/B3 Ninja ZX-10	88-89	KT1050	875-415	———	———
ZX1000C1/C2/D6F Ninja ZX-10R	04-05	KTZX10	875-420	———	———
GPz1000	-84	KT1100	875-416	comes with o-ring	———
ZX10	06-12	KTZX10-Pro			
ZR1100C3/C4 ZRX1100	99-00	KT1050	875-415	———	———
ZX1100C Ninja ZX-11	90-93	KT1050	875-415	———	———
ZX1100D1-D9 Ninja ZX-11	93-01	KT1050	875-415	———	———
ZX1100E1/E2/E3 GPz	95-96	KT1050	875-415	———	———
ZX1100F1 GPz (ABS)	1996	KT1050	875-415	———	———
ZR1200A ZRX1200	01-05	KT1050	875-415	———	———
ZX1200A/B Ninja ZX-12R	00-05	KT750	875-417	———	———
KZ1300		KT1050	875-415	———	———
ZX1400 Ninja ZX-14	06-11	KTZX14	875-421	———	———

Kawasaki ATV & Offroad

KX250F		KT900	875-419	———	———
KLX400	2003	ST1300GX	875-405	EC377	875-783
KSF400 KFX ATV	04-06	ST1300GX	875-405	EC377	875-783

Suzuki Street

GSXR600	93-96	ST1100GX	875-403	EC065	875-781
GSXR600	97-00	ST750GX	875-401	EC377	875-783
GSXR600	01-03	ST750Y2K	875-406	EC523	875-785
GSXR600	04-07	ST1000-3	875-407	EC745	875-787
SV650	99-04	ST650SV	875-408	EC377	875-783
GSX-R750 oil cooled	86-92	ST750	875-402	EC065	875-781
GSX-R750 water cooled	93-95	ST1100GX	875-403	EC065	875-781
GSX-R750 SRAD motors	96-99	ST750GX	875-401	EC377	875-783
GSX-R750	00-03	ST750Y2K	875-406	EC523	875-785
GSX-R750	04-08	ST1000-3	875-407	EC745	875-787
GSX-R1000K	01-02	ST750Y2K	875-406	EC523	875-785
GSX-R1000K	03-08	ST1000-3	875-407	EC745	875-787
GS1100/1150	all	ST1100	875-404	EC062	875-789
GSX-R1100 oil cooled	87-92	ST750	875-402	EC065	875-781
GSX-R1100 water cooled	93-98	ST1100GX	875-403	EC065	875-781
GSF1200 Bandit	97-05	ST750	875-402	EC065	875-781
GSX1300R Hayabusa	99-07	ST1300GX	875-405	EC377	875-783
GSX1300R Hayabusa	08-	ST1300-08PRO	875-409	———	———

Suzuki ATV & Offroad

RM-Z250K		KT900	875-419	———	———
DR-Z400		ST1300GX	875-410	EC377	875-783
LT-Z400K ATV		ST1300GX	875-410	EC377	875-783

Yamaha Street

FZR600W/R	89-99	YT1000	875-435	EC019	875-780
YZF-R6	99-05	YT1000	875-435	EC019	875-780
YZF-R6	06-12	YTR6	875-437	———	———
FZR750R	87-88	YT1000	875-435	EC019	875-780
YZF750R	94-98	YT1000	875-435	EC019	875-780
FZ1000 FZ1	01-03	YT1000	875-435	EC019	875-780
FZR1000	87-95	YT1000	875-435	EC019	875-780
YZF1000R	1997	YT1000	875-435	EC019	875-780
YZF-R1	98-03	YT1000	875-435	EC019	875-780
YZF-R1	04-06	YTR1	875-436	———	———
YZF-R1	09-11	YTR1-09	875-438	———	———
FJ1100	84-85	YT1000	875-435	EC019	875-780
FJ1200	86-93	YT1000	875-435	EC019	875-780

Cam Chain Tensioners

Yamaha ATV & Offroad

Cam Chain Tensioner Model	Year	APE No.	Order No.	Cam Chain Tensioner Gasket Cometic No.	Order No.
TT-R125	00-05	YT1000	875-435	EC019	875-780
TT-R250	99-06	YT1000	875-435	EC019	875-780
WR250F	01-05	YT1000	875-435	EC019	875-780
YFB250 Beartracker	99-02	YT1000	875-435	EC019	875-780
YFM250 Timberwolf	92-01	YT1000	875-435	EC019	875-780
YZ250F	01-04	YT1000	875-435	EC019	875-780
YFM250 Timberwolf (ATV)	92-01	YT1000	875-435	EC019	875-780
WR250F	01-04	YT1000	875-435	EC019	875-780
WR400F	98-00	YT1000	875-435	EC019	875-780
YZ400F	98-99	YT1000	875-435	EC019	875-780
WR426F	01-02	YT1000	875-435	EC019	875-780
YZ426F	00-02	YT1000	875-435	EC019	875-780
WR450F	03-06	YT1000	875-435	EC019	875-780
WR450F	07-11	YT450	———	EC019	875-780
YZ450F	03-06	YT1000	875-435	EC019	875-780
YZ450F	06-09	YT450	———	EC019	875-780
YFZ450 (ATV)	04-05	YT1000	875-435	EC019	875-780

Gel Lube

Engine assembly is made easier, quicker, and cleaner with Valco's premier lubricant —GelLube™. GelLube sprays on thin and penetrates quickly—transforming into a heavy-duty, load-bearing, protective gel. GelLube does not drip, melt or shift when applied. GelLube bonds to metal surfaces and fills all small spaces and crevices on valve springs, cranks, cams, bearings and much more. Sold in 8 oz. can.

Order No. 800-565

LPC-3® Penetrating Oil

Super rust busting penetrating lubricant • Multipurpose lubricant
- Protects metal
- Displaces moisture

Sold in 11 fl. oz. aerosol can.

Order No. 899-191

Assembly Lube

Use on crankshafts, valve guides, cylinder walls, pistons, camshafts, etc. Synthetic and petroleum oil soluble.
Sold in 11 fl. oz. aerosol can.

Order No. 899-192

950-191

Cam Chain Tensioner Pushrod Kit

High performance kits contain 4 pieces: 1 push rod (5mm longer than stock), 2 heavy duty springs and tensioner block gasket. Improves cam chain function, prevents cam chain noise and extends cam chain life.
Made in Japan. Available for the following Kawasaki models.

Kawasaki

PRK-101	Order No. 950-191
Model	**Year**
KZ1000J1/J2/J3	81-83
KZ1000K1/K2 LTD	81-82
KZ1000M1/M2 CSR	81-82
KZ1000P1-P21 Police	82-02
KZ1000R1/R2 Replica	82-83
KZ1100A1/A2/A3 Shaft	81-83
KZ1100B1/B2 GPz	81-82
KZ1100D1/D2 Spectre	82-83
KZ1100L1 LTD	1983
ZN1100B1/B2 LTD Shaft	84-85
ZX1100A1/A2 GPz	83-84

PRK-102	Order No. 950-192
Model	**Year**
KZ650H1/H2/H3 CSR	81-83
KZ700A1	1984
ZN700A1/A2 LTD	84-85
KZ750E1/E2/E3	80-82
KZ750F1 LTD Shaft	1983
KZ750H1/H2/H3/H4 LTD	80-83
KZ750L3	1983
KZ750N1/N2 Spectre	82-83
KZ750R1 GPz	1982
ZR750C1/C2/C3 Zephyr	91-93
ZX750A1/A2/A3 GPz	83-85

PRK-103	Order No. 950-193
Model	**Year**
KZ550A1/A2/A3/A4	80-83
KZ550C1/C2/C3/C4 LTD	80-83
KZ550D1 GPz	1981
KZ550F1/F2 Spectre & LTD	83-84
KZ550H1/H2 GPz	82-83
KZ550M1 LTD	1983
ZR550B1/B2/B3/B4 Zephyr	90-93
ZX550A1/A2 GPz	84-85

White Lithium Grease

Multipurpose White Lithium Grease™ is a quality white grease (NLGI#1) specifically designed to protect engine parts.
The exceptional consistency of this grease creates ease in application for all engine parts including valves, bearings, crankshafts, wheels and nut assemblies and all other areas where metal-metal contacts occur.
Sold in 8 oz. tube.

Order No. 800-545

RED LINE SYNTHETIC OIL

Synthetic CV-2 Grease

Red Line CV-2 Grease is designed to withstand the extreme temperatures and pressures which occur in high-performance wheel bearings and CV-joints. The excellent high-temperature stability, extreme-pressure protection, and water resistance enables it to out-perform even the best conventional or synthetic greases.
Red Line CV-2 Grease can be used in a wide range of applications at temperatures ranging between -100° F to 500° F and provides good oxidation and corrosion resistance, low evaporation and oil separation, and has a minimum effect on rubber seals. Sold in 14 oz. tub.

Order No. 900-850

APE Cam Sprockets

APE Adjustable Cam Sprocket Assemblies

For models with Factory OEM Bolt on Sprockets

APE manufactures the original "billet" adjustable cam sprockets. **APE** sprockets are necessary for precise cam timing to achieve maximum performance. **APE** sprockets are fully machined on the latest state of the art computerized equipment to precision tolerances and fully heat treated for extra long wear life. Its cam sprockets are used by most leading racers who demand top performance along with the safety of not chancing their expensive racing heads to reworked stock sprockets.

Honda

Model	Year	APE No	Order No
CBR600F2/F3	91-98	ACS600H	875-510
CBR600F4	99-	ACS600-4H	875-511
CBR600RR	03-08	ACS600RR	875-515
CBR900RR Firebird	93-99	ACS900H	875-512
CBR929RR	00-01	ACS929H	875-513
CBR954RR	02-03	ACS929H	875-513
CBR1000RR	04-06	ACS929H	875-513
CBR1100XX Blackbird	97-03	ACS1100H	875-514

Kawasaki

EX500	all	ACS500K	875-505
ZX600		ACS600K	875-506
ZX750F Ninja750R	87-90	ACS750K	875-507
ZX750H Ninja ZX-7	89-90	ACS750K	875-507
Z1/A/B-900	73-75	ACS900K	875-500
KZ900A4/A5	76-77	ACS900K	875-500
KZ900B1 LTD	1976	ACS900K	875-500
KZ1000A1/A2	77-78	ACS900K	875-500
KZ1000A3/A4 MKII	79-80	ACS1000K	875-501
KZ1000B1/B2 LTD	77-78	ACS900K	875-500
KZ1000B3/B4 LTD	79-80	ACS1000K	875-501
KZ1000D1 Z1R	1978	ACS900K	875-500
KZ1000D3 Z1R	1980	ACS1000K	875-501
KZ1000E1/E2 Shaft	79-80	ACS1000K	875-501
KZ1000J1/J2/J3	81-83	ACS1100K	875-503
KZ1000K1/K2	81-82	ACS1100K	875-503
KZ1000M1/M2	81-82	ACS1100K	875-503
KZ1000P Police	82-05	ACS1100K	875-503
KZ1000R1/R2 Replica	82-83	ACS1100K	875-503
KZ1000 (w/32T)		ACS1000K	875-501
Kaw with MK11	16T crank	ACS1100K-2B	875-504
using stock GPZ1100	0 bolt cams.		
ZX1100A GPz	83-84	ACS1100K	875-503
ZX1000B Ninja ZX-10	88-90	ACS1100ZX	875-509
ZX1100C/D Ninja ZX-11	90-01	ACS1100ZX	875-509
ZR1100 ZRX	99-00	ACS1100ZX	875-509
ZR1200 ZRX	01-05	ACS1100ZX	875-509
ZX1400 Ninja ZX-14	06-11	ACSZX14	875-541

Suzuki

Model	Year	APE No	Order No
GSXR600W	92-93	ACS750GSX	875-520
GSXR750G/H	86-87	ACS750S	875-521
GSXR750J/K	88-89	ACS1100GSX	875-522
GSXR750L/M/N	90-92	ACS750S	875-521
GSXR750W	93-95	ACS750GSX	875-520
GS1100E	80-83	ACS1100S	875-524
GS1150E	83-86	ACS1100S	875-524
GSXR1100	86-92	ACS1100GSX	875-522
GSXR1100W	93-98	ACS750GSX	875-520
GSF1200 Bandit		ACS1200S	875-523

Yamaha

YZF-R6	99-05	ACS600	875-530
YZF-R6	06-10	ACSY06R6	875-535
FZR750R	87-88	ACS750Y	875-531
YZF750, OWO1		ACS1000Y	875-532
FZR1000	87-88	ACS750Y	875-531
FZR1000	89-95	ACS1000Y	875-532
YZF-R1	99-03	ACS1000R1	875-533
FJ1100	84-85	ACS1100FJ	875-534
FJ1200	86-93	ACS1100FJ	875-534

APE Adjustable Cam Sprocket Assemblies

For models with Factory Pressed on Sp rockets

APE adjustable cam sprocket assemblies allow the cam timing to be adjusted on models with factory pressed on sprockets. The CNC machined APE adapters are pressed on the cams in place of the stock sprocket. Then the slotted sprockets can be adjusted. All assemblies include two adapters, adjustable sprockets, and four bolts.

Kawasaki

Application	Year	APE No.	Order No.
EX250 Ninja	08-11	ACS250KN	875-540
ZX600 Ninja ZX6		CSAKK600	875-550
ZX750 Ninja ZX7	91-00	CSAKK750	875-551
ZX900 Ninja ZX9R	94-97	CSAKK900	875-552
ZX900 Ninja ZX9R	98-later	CSAKK900-98	875-553
ZX1200 Ninja ZX12		CSAKK1200	875-544
ZX1400 Ninja ZX14		ACSZX14	875-541

Suzuki

GSX-R600T	97-99	CSAKS750	875-560
GSX-R600K	01-09	CSAKS750-2	875-561
SV650	99-	CSAKS650	875-566
GSX-R750	98-99	CSAKS750	875-560
GSX-R750K	00-09	CSAKS750-2	875-561
GSX-R1000K	01-09	CSAKS750-2	875-561
GSX1300R Hayabusa	99-	CSZKS1300	875-565

Triumph X75 Hurricane
Photo courtesy of Layla Guest / Brandon Castellanos

Motion Pro Degree Wheel

Manufactured from .052" thick aluminum with a 6-3/4" outside diameter and a 6mm center hole. Black anodized finish with easy to read numbers. Check or set timing or cam timing.
Use with 2 & 4-stroke engines. Sold each.

Order No. 950-442

APE Positive Stop TDC Tools

The only accurate way to find TDC (top dead center).
Available in the following sizes:

Description	Order No.
10mm TDC Tool	950-235
12mm TDC Tool	950-236
14mm TDC Tool	950-237

Cam Chains

Sudco Cam Chains

SUDCO cam chains are stock replacements for the models listed. Cam Chains available are endless. Master links are not available. ***Made in Japan.*** Available for the following models:

Honda Street

Model	Year	Cam Chain Number x Links	Order No
CB750A Automatic	76-78	BF05M x 94L	311-015
CB750F Super Sport	76-78	BF05M x 94L	311-015
CB750K0/K1/K2/K3/K4/K5	69-75	BF05M x 94L	311-015
CB750K	76-78	BF05M x 94L	311-015

Honda ATV

ATC90/K1/K2/K3	70-78	25H x 86L	311-060
ATC110	79-85	25H x 88L	311-061
ATC185	1980	25H x 100L	311-063
ATC185S	81-83	25H x 100L	311-063
ATC200	81-83	25H x 100L	311-063
ATC200E	82-83	25H x 100L	311-063
ATC200ES	1984	25H x 100L	311-063
ATC200M	84-85	25H x 100L	311-063
ATC200S	84-86	25H x 100L	311-063
ATC200X	83-87	25H x 100L	311-063
TRX200 Fourtrax	1984	25H x 100L	311-063
TRX200 Fourtrax	90-91	25H x 100L	311-063
TRX200D Fourtrax	91-97	25H x 100L	311-063
ATC250ES Big Red	85-87	82RH2015 x 110L	311-103
ATC250SX	85-87	82RH2015 x 110L	311-103
TRX250 Fourtrax 250	85-87	82RH2015 x 110L	311-103
TRX250X Fourtrax 250X	87-88	82RH2010 x 110L	311-082
TRX250X Fourtrax 250X	91-92	82RH2010 x 110L	311-082
TRX300 Fourtrax 300	88-00	82RH2010 x 110L	311-082
TRX300EX Fourtrax 300EX	93-00	82RH2010 x 110L	311-082
TRX300EX Sportrax 300EX	01-06	82RH2010 x 110L	311-082
TRX300FW Fourtrax 300 4x4	1988	82RH2010 x 110L	311-082
TRX300FW Fourtrax 300 4x4	90-00	82RH2010 x 110L	311-082
ATC350X	85-86	82RH2015 x 114L	311-105
TRX350 Fourtrax 4x4	86-87	82RH2015 x 114L	311-105
TRX350D Fourtrax Foreman	87-89	82RH2015 x 114L	311-105
TRX400EX Fourtrax 400EX	99-00	82RH2010 x 112L	311-083
TRX400EX Sportrax 400EX	01-06	82RH2010 x 112L	311-083

Honda Dual Sport & Offroad

XL75	77-79	25H x 86L	311-060
XR75/K1/K2	73-75	25H x 86L	311-060
XR75	76-78	25H x 86L	311-060
CRF80F	04-07	25H x 88L	311-061
XL80S	80-85	25H x 88L	311-061
XR80	79-84	25H x 88L	311-061
XR80R	85-03	25H x 88L	311-061
CT90 Trail 90	66-68	25H x 86L	311-060
CT90K1-K5 Trail 90	69-75	25H x 86L	311-060
CT90 Trail 90	76-79	25H x 86L	311-060
SL90 Moto Sport	1969	25H x 86L	311-060
ST90K/K1/K2 Trail Sport 90	73-75	25H x 86L	311-060
SL100K/K1/K2/K3 Moto Sport	70-73	25H x 100L	311-063
XL100/K1	74-75	25H x 100L	311-063
XL100	76-78	25H x 98L	311-062
XL100S	79-85	25SH(DHA) x 102L	311-070
XR100	81-84	25SH(DHA) x 102L	311-070
XR100R	85-03	25SH(DHA) x 102L	311-070
CT125 Trail 125	1977	25H x 98L	311-062
SL125/K1/K2 Moto Sport	71-73	25H x 100L	311-063

Honda Dual Sport & Offroad

Model	Year	Cam Chain Number x Links	Order No.
TL125/K1/K2/S Trials	73-76	25H x 100L	311-063
XL125/K1	74-75	25H x 100L	311-063
XL125	76-78	25H x 98L	311-062
XL125S	79-85	25H x 98L	311-062
XL175	73-78	219H x 88L	311-050
XL185S	79-85	25H x 100L	311-063
XR185	1979	25H x 100L	311-063
TLR/TR200	86-87	25H x 100L	311-063
XL200R	83-84	25H x 100L	311-063
XR200	80-84	25H x 100L	311-063
XR200R	81-83	25H x 100L	311-063
XR200R	84-85	82RH2015 x 100L	311-100
XR200R	86-03	25H x 100L	311-063
TL250	75-76	219T x 94L	311-051
XL250K/K1/K2 Moto Sport	72-76	219T x 94L	311-051
XL250S	78-81	219T x 94L	311-051
XL250R	82-83	219T x 94L	311-051
XL250R	84-87	82RH2015 x 102L	311-101
XR250L	91-96	82RH2015 x 102L	311-101
XR250	79-80	219T x 94L	311-051
XR250R	81-82	219T x 94L	311-051
XR250R	84-95	82RH2015 x 102L	311-101
XR250R	96-04	82RH2010 x 102L	311-080
SL350/K1/K2 Moto Sport	69-73	219H x 94L	311-051
XL350R	84-85	82RH2015 x 108L	311-102
XR350R	83-85	82RH2015 x 108L	311-102
XR400R	96-04	82RH2010 x 112L	311-083
XL500S	79-81	82RH2015 x 120L	311-107
XL500R	1982	82RH2015 x 120L	311-107
XR500	79-80	82RH2015 x 120L	311-107
XR500R	81-82	82RH2015 x 120L	311-107
XR500R	83-84	82RH2015 x 118L	311-106
XL600R	83-87	82RH2015 x 118L	311-106
XL600V Transalp	89-90	82RH2010 x 118L	311-084
XR600R	85-87	82RH2015 x 118L	311-106
XR600R	89-00	82RH2010 x 118L	311-084
NX650	88-89	82RH2010 x 118L	311-084
XR650L	93-07	82RH2010 x 118L	311-084

Kawasaki Street

KZ400A1/A2 Deluxe	77-78	BF05T x 88L	313-088
KZ400B1/B2	78-79	BF05T x 88L	313-088
KZ400C1	1978	BF05T x 88L	313-088
KZ400/D/D3/D4	74-77	BF05T x 88L	313-088
KZ400H1 LTD	1979	BF05T x 88L	313-088
KZ400S/S2/S3 Special	75-77	BF05T x 88L	313-088
KZ650B1/B2/B2A/B3	77-79	BF05T x 118L	311-001
KZ650C1/C2/C3 Custom	77-79	BF05T x 118L	311-001
KZ650D1/D1A/D2 SR	78-79	BF05T x 118L	311-001
KZ650E1 LTD	1980	BF05T x 118L	311-001
KZ650F1	1980	BF05T x 118L	311-001
KZ750B1/B2/B3/B4	76-79	BF05T x 130L	313-130
KZ750G1 LTD	1980	BF05T x 130L	313-130
ZX750J1/J2 Ninja ZX-7	91-92	BF05MU x 106L	311-035
ZX750K1/K2 Ninja ZX-7R	91-92	BF05MU x 106L	311-035
ZX750L1/L2/L3 Ninja ZX-7	93-95	BF05MU x 106L	311-035
ZX750M1/M2 Ninja ZX-7R	93-94	BF05MU x 106L	311-035

Kawasaki Street

Model	Year	Cam Chain Number x Links	Order No.
Z1/Z1A/Z1B-900	73-75	BS05MH x 122L	311-027
KZ900A4/A5	76-77	BS05MH x 122L	311-027
KZ900B1 LTD	1976	BS05MH x 122L	311-027
KZ1000A1/A2/A2A	77-78	BS05MH x 122L	311-027
KZ1000A3/A3A/A4 MKII	79-80	BS05MH x 124L	311-028
KZ1000B1/B2/B3 LTD	77-79	BS05MH x 122L	311-027
KZ1000B4 LTD	1980	BS05MH x 124L	311-028
KZ1000C1/C1A/C2 Police	78-79	BS05MH x 122L	311-027
KZ1000C3/C4 Police	80-81	BS05MH x 124L	311-028
KZ1000D1 Z1R	1978	BS05MH x 122L	311-027
KZ1000D3 Z1R	1980	BS05MH x 124L	311-028
KZ1000E1/E2 Shaft ST	79-80	BS05MH x 124L	311-028
KZ1000G1 LTD Classic	1980	BS05MH x 124L	311-028

Kawasaki ATV

KLF110A1/A2 Mojave 110	87-88	25H x 88L	311-061
KLF110B1 Mojave 110	1987	25H x 88L	311-061
KLT110A1/A2/A3	84-86	25H x 88L	311-061
KLT200A1/A2/A3/A4/A4A	81-83	BF05T x 90L	311-002
KLT200B1	1983	BF05T x 90L	311-002
KLT200C1/C2	83-84	BF05T x 90L	311-002
KLT250A1/A2	82-83	BF05T x 90L	311-002
KLT250C1/C2/C3 Prairie	83-85	BF05T x 90L	311-002
KLT250P1 Police	1984	BF05T x 90L	311-002
KSF250A1-A17 Mojave 250	87-03	82RH2010 x 158L	311-088
KSF250A18 KFX250 Mojave	2004	82RH2010 x 158L	311-088
KEF300A1-A6 Lakota 300	95-00	BF05T x 90L	311-002
KEF300B1/B2/B3 Sport	01-03	BF05T x 90L	311-002
KLF300A1/A2 Bayou	86-87	BF05T x 90L	311-002
KLF300B1-B17 Bayou 300	88-04	BF05T x 90L	311-002
KLF300C1-C16 Bayou 4x4	89-04	BF05T x 90L	311-002
KVF300A1-A4 Prairie 4x4	99-02	BF05T x 90L	311-002
KVF300B1-B4 Prairie 300	99-02	BF05T x 90L	311-002
KVF360A1-A3 Prairie 4x4	03-05	82RH2010 x 118L	311-084
KVF360A6F/A7F Prairie 4x4	06-07	82RH2010 x 118L	311-084
KVF360B1/B2/B3 360	03-05	82RH2010 x 118L	311-084
KVF360B6F/B7F Prairie 360	06-07	82RH2010 x 118L	311-084
KVF360C1 Prairie 360 4x4 Advantage Classic	2003	82RH2010 x 118L	311-084
KVF360C2/C3 Prairie 360 4x4 Hardwoods Green HD	04-05	82RH2010 x 118L	311-084
KVF360C6F/C7F Prairie 4x4 Hardwoods Green HD	06-07	82RH2010 x 118L	311-084
KLF400B1-B7 Bayou 4x4	93-99	82RH2010 x 118L	311-084
KVF400A1/A2 Prairie 4x4	97-98	82RH2010 x 118L	311-084
KVF400B1 Prairie 400	1998	82RH2010 x 118L	311-084
KVF400C1-C4 Prairie 4x4	99-02	82RH2010 x 118L	311-084
KVF400D1-D4 Prairie 400	99-02	82RH2010 x 118L	311-084

Kawasaki Dual Sport & Offroad

KL250A1-A5	78-82	BF05T x 90L	311-002
KL250C1/C2	83-84	BF05T x 90L	311-002
KL250D2-D22 KLR250	85-05	82RH2010 x 158L	311-088
KLX250A1/A2 Offroad	79-80	BF05T x 90L	311-002

Suzuki Street

GS400B/XB/C/XC	77-78	BF05MU x 120L	311-037
GS425N/EN/LN	1979	BF05MU x 120L	311-037
GS450ET/EX/EZ/ED	80-83	BF05MU x 120L	311-037
GS450GAZ/GAD Automatic	82-83	BF05MU x 120L	311-037
GS450GAF Automatic	1985	BF05MU x 120L	311-037
GS450LT/LX/LZ/LD	80-83	BF05MU x 120L	311-037

Suzuki Street

Model	Year	Cam Chain Number x Links	Order No.
GS450LF/LG/LH/LJ	85-88	BF05MU x 120L	311-037
GS450ST/SX	80-81	BF05MU x 120L	311-037
GS450TX/TZ/TXZ/TXD	81-83	BF05MU x 120L	311-037
GS500EK/EL/EM/EN	89-92	BF05MU x 120L	311-037
GS500EP-EY/K1	93-01	BF05MU x 120L	311-037
GS550B/C/EC/N/EN/ET	77-80	BF05M x 116L	311-016
GS550LN/LT/LX/LZ	79-82	BF05M x 116L	311-016
GS550MZ Katana	1982	BF05M x 116L	311-016
GS550TX	1981	BF05M x 116L	311-016
GSX600FJ/FK/FL/FM Katana	88-91	BF05M x 116L	311-016
GSX600FN-FT Katana	92-96	BF05M x 116L	311-016
GSX-R600WN/WP	92-93	BF05MU x 110L	311-036
GS650EX/EZ	81-82	BF05M x 116L	311-016
GS650GX/GZ/GD	81-83	BF05MU x 120L	311-037
GS650GLX/GLZ/GLD	81-83	BF05MU x 120L	311-037
GS650MD Katana	1983	BF05MU x 120L	311-037
XN85D Turbo	1983	BF05MU x 120L	311-037
GS700EF/ESF	1985	BF05MU x 120L	311-037
GS750ET/EX/EZ	80-82	BF05MU x 122L	311-038
GS750ED/ESD	1983	BF05MU x 120L	311-037
GS750LN	1979	BF05MU x 120L	311-037
GS750LT/LX	80-81	BF05MU x 122L	311-038
GS750SD Katana	1983	BF05MU x 122L	311-038
GS750TZ/TD	82-83	BF05MU x 122L	311-038
GSX750FK-FV Katana	89-97	BF05M x 118L	311-017
GSX-R750G/H	86-87	BF05M x 116L	311-016
GSX-R750RG	1986	BF05M x 116L	311-016
GSX-R750J/K	88-89	BF05M x 118L	311-017
GSX-R750L/M/N	90-92	BF05M x 116L	311-016
GSX-R750WP/WR/WS	93-95	BF05MU x 110L	311-036
GS850GN/GT/GX/GZ/GD	79-83	BF05MU x 120L	311-037
GS850GLT/GLX/GLZ/GLD	80-83	BF05MU x 120L	311-037
GS1000C/EC/N/EN/ET	78-80	BF05MU x 120L	311-037
GS1000GT/GLT/GX/GLX	80-81	BF05MU x 120L	311-037
GS1000LN	1979	BF05MU x 120L	311-037
GS1000SN/ST	79-80	BF05MU x 120L	311-037
GS1000LN	1979	BF05MU x 120L	311-037
GS1000SZ Katana	1982	BF05MU x 120L	311-037
GS1100ET/EX/EZ	80-82	BF05MU x 120L	311-037
GS1100ED/ESD	1983	BF05MU x 120L	311-037
GS1100GZ/GLZGD/GLD	82-83	BF05MU x 120L	311-037
GS1100GKZ/GK2/GKD/GKE	82-84	BF05MU x 120L	311-037
GS1100LT	1980	BF05MU x 120L	311-037
GS1100SD Katana	1983	BF05MU x 120L	311-037
GSX1100FJ/K/L/M/N/P Katana	88-93	BF05MU x 122L	311-038
GSX-R1100G/H/J/K/L/M/N	86-92	BF05MU x 122L	311-038
GSX-R1100W	93-98	BF05MU x 110L	311-036
GS1150ES3/ESE/EF/ESF	83-84	BF05MU x 120L	311-037
GS1150EF2/EG/ESG	85-86	BF05MU x 120L	311-037

Suzuki ATV

ALT/LT125D/E/F/G/H	83-87	25H x 98L	311-062
LT160EK/EL/EM/EN	89-92	25H x 98L	311-062
LT-F160M-K1	91-01	25H x 98L	311-062
ALT185F/LT185E/F/G/H	84-87	25H x 98L	311-062
LT230EH/J/K/L/M/N/P	87-93	25SH(DHA) x 104L	311-071
LT230GEF/GEG Quad	85-86	25SH(DHA) x 104L	311-071
LT230SF/SG/SH/SJ Quad	85-88	25SH(DHA) x 104L	311-071
LT-F230G/H Quadrunner	86-87	25SH(DHA) x 104L	311-071
LT250EFF/EFG Quad	85-86	82RH2015 x 112L	311-104
LT250SK/SL Quadrunner	89-90	25H x 104L	311-064
LT-F250J/K/L/M/N/P	88-93	25H x 104L	311-064
LT-F250R/S/T/V/W	94-98	25H x 104L	311-064
LT-F250FX/FY/FK1/FK2	99-02	25H x 104L	311-064

Cam Chains

Suzuki ATV

Model	Year	Cam Chain Number x Links	Order No.
LT-F250 FK2-FK7	02-07	25H x 104L	311-064
LT300EH/EJ/EK Quadrunner	87-89	82RH2015 x 118L	311-106
LT-F300FX-FK3 King Quad	99-03	82RH2010 x 108L	311-081
LT-4WDH/J/K/L/M	87-91	25H x 104L	311-064
LT-4WDN/P/R/S/T	92-97	25H x 104L	311-064
LT-F4WDV/WDW Quadrunner	97-98	25H x 104L	311-064
LT-F4WDXM/N/P King Quad	91-93	82RH2010 x 108L	311-081
LT-F4WDXR/S/T King Quad	94-96	82RH2010 x 108L	311-081
LT-F4WDXV/W King Quad	97-98	82RH2010 x 108L	311-081
LT-A400FK2/FK3 Eiger 4WD	02-03	82RH2010 x 108L	311-081
LT-A400K2/K3 Eiger	02-03	82RH2010 x 108L	311-081
LT-F400 FK2-FK7 Eiger 4WD	02-07	82RH2010 x 108L	311-081
LT-F400K2-K7 Eiger	02-07	82RH2010 x 108L	311-081

Suzuki Dual Sport & Offroad

DR100D-L	83-90	25H x 98L	311-062
SP100D Dual Sport	1983	25H x 98L	311-062
DR125Z/D/E	82-84	25H x 98L	311-062
DR125G/H/J	86-88	25H x 98L	311-062
DR125SER/SES/SET Dual	94-96	25H x 98L	311-062
SP125Z/D Dual Sport	82-83	25H x 98L	311-062
SP125G/H/J Dual Sport	86-88	25H x 98L	311-062
DR200G/H/J	86-88	25SH(DHA) x 104L	311-071
DR200SET-SEK7 Dual Sport	96-07	25SH(DHA) x 104L	311-071
SP200G/H/J Dual Sport	86-88	25SH(DHA) x 104L	311-071
DR250Z/D Offroad	82-83	82RH2015 x 112L	311-104
DR250F Offroad	1985	82RH2015 x 112L	311-104
DR250L/M/N/P Offroad	90-93	82RH2010 x 108L	311-081
DR250SL-SES Dual Sport	90-95	82RH2010 x 108L	311-081
SP250Z/D Dual Sport	82-83	82RH2015 x 112L	311-104
SP250F Dual Sport	1985	82RH2015 x 112L	311-104
DR350L-X Offroad	90-99	82RH2010 x 108L	311-081
DR350SL-SEX Dual Sport	90-99	82RH2010 x 108L	311-081
DR500X/Z/D Offroad	81-83	82RH2015 x 124L	311-081
SP500X/Z/D Dual Sport	81-83	82RH2015 x 124L	311-108
SP600F Dual Sport	1985	82RH2015 x 124L	311-108
DR650SL-SES Dual Sport	90-95	82RH2015 x 124L	311-108

Yamaha Street

FZR400U/SUC/W/SWC/A/SAC	88-90	BF04MA x 112L	311-010
FZR600W/WC/AC	89-90	BF04MA x 118L	311-011
FZR600RA/RAC-RL/RLC	90-99	BF04MA x 118L	311-011
FZ700T/TC	1987	BS05MH x 110L	311-026
FZX700S/SC/T/TC Fazer	86-87	BS05MH x 110L	311-026
FZ750N/S/SC	85-86	BS05MH x 110L	311-026
FZR750RT/RU	87-88	BS05MH x 110L	311-026
FZR1000T/TC/U/UC	87-88	BS05MH x 110L	311-026
FZR1000W/WC-G/GC	89-95	BS05MH x 108	311-025
XJ1100J Maxim	1982	BF05M x 128L	311-018
XS1100E/F/G/H	78-81	BF05M x 128L	311-018
XS1100LG/LH Midnight Special	80-81	BF05M x 128L	311-018
XS1100SF/SG/SH Special	79-81	BF05M x 128L	311-018
VMX12N/NC-T/TC V-Max	86-05	BF05M x 118L	311-017
VMX12V/VC V-Max	2006	BF05M x 118L	311-017

Yamaha ATV

Model	Year	Cam Chain Number x Links	Order No.
YFM200N Moto 4	1985	25H x 104L	311-064
YFM200DXS-DXW Moto 4	86-89	25H x 104L	311-064
YTM200EK/EL Tri-Moto	83-84	25H x 104L	311-064
YTM200ERN Tri-Moto	1985	25H x 104L	311-064
YTM200K/L/N Tri-Moto	83-85	25H x 104L	311-064
YFM225S/T/U Moto 4	86-88	25H x 104L	311-064
YTM225DXK/DXL/DXN	83-85	25H x 104L	311-064
YTM225DRN/DRS Tri-Moto	85-86	25H x 104L	311-064
YFU1W (230cc) Pro Hauler	1989	25H x 104L	311-064
YFU1TW (230cc) Pro Hauler	1989	25H x 104L	311-064
YFB250D-H Timberwolf	92-96	25H x 104L	311-064
YFB250UH-UK Timberwolf	96-98	25H x 104L	311-064
YFB250FWF-FWM Timberwolf	94-00	25H x 104L	311-064
YFM250W/A/B Moto-4	89-91	25H x 104L	311-064
YFM250XL/XLC	1999	25H x 104L	311-064
YFM250M/MC Beartracker	2000	25H x 104L	311-064
YFM250BV	2006	25H x 104L	311-064
YFM350ERT-ERG Moto 4	87-95	BF05M x 90L	311-013
YFM350FWT-FWJ Big Bear	87-97	BF05M x 90L	311-013
YFM350FWB Big Bear	97-99	BF05M x 90L	311-013
YFM350UH-UL Big Bear	96-99	BF05M x 90L	311-013
YFM350FX Wolverine	95-01	BF05M x 90L	311-013
YFM350XT-XS/XSC Warrior	87-04	BF05M x 90L	311-013
YFM350S/RT/RV/RW Raptor	04-07	BF05M x 90L	311-013
YFM350RSET Raptor 350 SE	2005	BF05M x 90L	311-013
YFM350RSEV Raptor 350 SE	2006	BF05M x 90L	311-013
YFP350U Terrapro	1988	BF05M x 90L	311-013
YFM600FW Grizzly	98-00	82RH2015 x 126L	311-109
YFM600HM/HMC	2000	82RH2015 x 126L	311-109
YFM660RP/RPB Raptor	2001	82RH2015 x 126L	311-109

Yamaha Dual Sport & Offroad

XT125J/K/KC Dual Sport	82-83	25H x 104L	311-064
BW200N/S/ES/ET/EU	85-88	25H x 104L	311-064
TW200T/TC-R/RC Trailway	87-03	25H x 104L	311-064
XT200J/K/KC Dual Sport	82-83	25H x 104L	311-064
TT225S/T	86-87	25H x 104L	311-064
TT225L/LC/RM/RMC	99-00	25H x 104L	311-064
TT-R225N/NC/P/PC/R/RC	01-03	25H x 104L	311-064
XT225 Serrow	92-07	25H x 104L	311-064
TT250G/H/J Offroad	80-82	BF05M x 90L	311-013
XT250G/H/J/K/KC Dual Sport	80-83	BF05M x 90L	311-013
XT250L/LC Dual Sport	1984	82RH2015 x 136L	311-110
BW350 T/U	87-88	BF05M x 92L	311-014
TT350S/T Offroad	86-87	82RH2015 x 136L	311-110
XT350N/NC-M/MC Dual	85-00	82RH2015 x 136L	311-110
TT500C/D/E/F/G/H Offroad	76-81	BF05M x 106L	311-019
XT500C/D/E/F/G/H Dual	76-81	BF05M x 106L	311-019
XT550J/K Dual Sport	82-83	82RH2015 x 126L	311-109
TT600K/L/N/S Offroad	83-86	82RH2015 x 126L	311-109
XT600L/LC-EG/EGC Dual	84-95	82RH2015 x 126L	311-109

Alternator Block Off Cover

APE alternator block off covers allow the removal of the alternator on race only bikes. Their unique design makes them a simple bolt on replacement for the alternator, which can be re-installed if desired. Complete with o-ring and mounting bolts.

Kawasaki

ZX7 '91-'96	ABP-K750	875-607

Suzuki

GSXR750/1100 oil-cooled thru '92	ABP-S1100	875-605*

Yamaha

FZR750/1000/FJ1100/1200	ABP-Y1100	875-606

*This model has the top mounting ear eliminated as most racers remove the top flange from the cases to facilitate the installation of larger carbs.

Heavy Duty Main Bearing Studs

Heat treated chrome moly main bearing studs (case studs) are necessary to prevent the cases from moving around under power in high output engines. These high strength studs help to prevent crankshaft damage. Made from the same special chrome moly that are used in APE cylinder studs. All threads are rolled after heat treat for maximum strength.

Kawasaki

Model	APE No.	Order No.
KZ900/1000/1100	MBS1000K	875-190

Suzuki

GS1100	MBS1100S	875-191
GSX-R1100 thru 1992	MBS1100GSX	875-192
GSX1300R Hayabusa	MBS1300GSX	875-193

Kawasaki Kick Start Block Off Cover

Much weight can be saved by removing the kick start assembly from Kawasaki drag bikes. APE makes it simple for the racer to remove the entire kick start mechanism from his Kawasaki. This billet cover bolts on and prevents any leaks. For Kawasaki KZ900/1000 thru 1980.

APE No. 99211 **Order No.** 875-630

Kawasaki Low Profile Oil Filter Cover

The original oil filter cover for lowered Kawasaki race bikes. Provides the maximum clearance under the bike. Kit comes complete with plate, special filter bolt, low profile drain plug, and allen wrench. The 2" minimum ground clearance rule is being strictly enforced by all of the drag racing organizations.

Description	APE No.	Order No
Z1/KZ900/KZ1000 thru 1980	OFC1000K	875-620
Drain Plug only for 875-620	DPK900	875-622

Kawasaki Low Profile Breather Cover

At last a low profile cover to replace the tall OEM breather cover. Allows plenty of room for large carbs, turbochargers, etc. CNC machined from billet stock. Uses factory o-ring. Plain for applications where motor is vented from starter hole. Or drilled and tapped for fitting and breather filter. Sold each.

Description	APE No.	Order No.
Plain	KBC1000K	875-640
Tapped	KBC1000D	875-641

Piston Kits

JE Racing Piston Kits

Sudco International is pleased to offer J.E. Pistons to the motorcycle performance industry. J.E. Pistons have gained an excellent reputation for top quality products. Consider these outstanding features:

- Made in U.S.A. from premium certified aerospace materials
- Ultra light weight, fully C.N.C. machined from dedicated forging
- Proprietary wrist pin designs for the maximum strength and light weight
- O.E.M. style rings for long term cylinder seal
- NASCAR proven durability
- All piston kits include pistons, rings, wrist pins, & pin clips
- Most big bore kits and gaskets for import motorcycles are in stock
- Sleeve type big bore piston kits are available by special order

J.E. Piston Kits/Cometic Gaskets

Notes: * = 1197cc & up, requires re-sleeving and top case boring N = Requires cylinder boring and nikasil process
**** = 1327cc & up, big block cylinders recommended**

Ducati

Model	Year	Displ.	Bore	Over Size	Comp. Ratio	Weight	JE Kit #	Piston Kit #	Head Gasket #	Base Gasket
916 4V 21mm Pin	94-96	955cc	96mm	+2mm	12.0:1	325g	131366	625-900	—	—
900SS	91-02	900cc	92mm	STD	11.5:1	361g	157597	625-905	—	—
900SS	91-02	944cc	94mm	+2mm	11.5:1	383g	157598	625-906	—	—

HARLEY DAVIDSONÆ

883/1200 Sportster	85-08	1200cc	3.498"	STD	9.5:1	332g	129856	625-910	—	—
883/1200 Sportster	85-08	1205cc	3.503"	+.005"	10.5:1	350g	132986	625-915	—	—
883/1200 Sportster	85-08	1208cc	3.508"	+.010"	10.5:1	350g	132987	625-916	—	—
883/1200 Sportster	85-08	1214cc	3.518"	+.020"	10.5:1	354g	132988	625-917	—	—
EVO Bathtub Big Bore	85-99	1340cc	3.498"	STD	10.5:1	392g	134092	625-934	—	—
		1342cc	3.503"	+.005"	8.5:1	350g	124962	625-920	—	—
		1342cc	3.503"	+.005"	9.5:1	370g	124846	625-924	—	—
		1342cc	3.503"	+.005"	10.0:1	385g	133732	625-929	—	—
		1342cc	3.503"	+.010"	10.5:1	394g	134093	625-935	—	—
		1345cc	3.508"	+.010"	8.5:1	350g	126943	625-921	—	—
		1345cc	3.508"	+.010"	9.5:1	372g	124847	625-925	—	—
		1345cc	3.508"	+.010"	10.0:1	385g	133733	625-930	—	—
		1345cc	3.508"	+.010"	10.5:1	394g	134094	625-936	—	—
		1353cc	3.518"	+.020"	9.5:1	374g	124848	625-926	—	—
		1353cc	3.518"	+.020"	10.0:1	391g	133734	625-931	—	—
		1353cc	3.518"	+.020"	10.5:1	400g	134095	625-937	—	—
		1361cc	3.528"	+.030"	10.0:1	395g	133735	625-932	—	—
Shovelhead 89"	78-84	1438cc	3.625"	STD	10.5:1	456g	138673	625-940	—	—
Buell S1, Thunderbolt, White Lighting-S3/S3T		1200cc	3.498"	STD	10.0:1	333g	161949	625-965	—	—
Buell S1, Thunderbolt, White Lighting-S3/S3T		1207cc	3.508"	+.010"	10.0:1	337g	161950	625-966	—	—
Twin Cam Big Bore	99-06	1546cc*	3.875"	STD	10.25:1	412g	161936	625-943	—	—
Twin Cam Big Bore	99-06	1554cc*	3.885"	+.010"	10.25:1	415g	161935	625-944	—	—

Honda

XR250L Dual Sport	91-96	270cc	76mm	+3mm	10.5:1	208g	127918	625-100	607-001 (kit)	kit only
XR250L Dual Sport	91-96	277cc	77mm	+4mm	10.5:1	215g	131243	625-101	607-001 (kit)	kit only
XR250R	86-04	270cc	76mm	+3mm	10.5:1	208g	127918	625-100	607-001 (kit)	kit only
XR250R	86-04	277cc	77mm	+4mm	10.5:1	215g	131243	625-101	607-001 (kit)	kit only
TRX400EX **ATV**	99-06	397cc	85mm	STD	10.5:1	263g	132697	625-110	—	—
TRX400EX **ATV**	99-06	406cc	86mm	+1mm	10.6:1	287g	132699	625-112	—	—
TRX400EX **ATV**	99-06	415cc	87mm	+2mm	10.8:1	291g	133889	625-113	—	—
XR400R	96-04	397cc	85mm	STD	10.5:1	263g	132697	625-110	—	—
XR400R	96-04	406cc	86mm	+1mm	10.6:1	287g	132699	625-112	—	—
XR400R	96-04	415cc	87mm	+2mm	10.8:1	291g	133889	625-113	—	—
TRX450R **ATV**	04-05	449cc	94mm	STD	11.5:1	292g	221771	625-181	—	—
TRX450R **ATV**	04-05	449cc	94mm	STD	13.0:1	299g	221767	625-180	—	—
CBR600F2/F3 **Mini Sprint**	91-98	618cc	66mm	+1mm	13.5:1	140g	163620	625-155	—	—
CBR600F2/F3 Hurricane	91-98	618cc	66mm	+1mm	13.5:1	140g	144537	625-150	—	—
CBR600F2/F3 Hurricane	91-98	637cc	67mm	+2mm	13.5:1	148g	144538	625-151	—	—

Honda

Model	Year	Displ.	Bore	Over Size	Comp. Ratio	Weight	JE Kit #	Piston Kit #	Head Gasket #	Base Gasket
XR600R	85-00	629cc	100mm	+3mm	10.5:1	386g	128995	625-120	607-005 (kit)	kit only
XR600R	85-00	640cc	101mm	+4mm	10.6:1	397g	128996	625-121	607-007 (kit)	kit only
XR600R	85-00	654cc	102mm	+5mm	10.8:1	395g	128998	625-123	607-007 (kit)	kit only
XR650R Offroad	00-05	649cc	100mm	STD	11.0:1	387g	190862	625-134	—	—
XR650L Dual Sport	93-06	644cc	100mm	STD	10.5:1	399g	130682	625-132	607-003 (kit)	kit only
XR650L Dual Sport	93-06	650cc	101mm	+1mm	10.5:1	412g	138978	625-130	—	—
XR650L Dual Sport	93-06	657cc	102mm	+2mm	10.5:1	406g	139550	625-131	—	—
NT650 Hawk GT	88-91	696cc	82mm	+3mm	11.0:1	276g	157589	625-171	—	—
CB750 (SOHC)	69-78	836cc	65mm	+3mm	10.5:1	151g	144539	625-160	—	—
CBR900RR	92-95	945cc	72mm	+2mm	12.0:1	175g	138979	625-165	—	—
CBR900RR	96-98	997cc	74mm	+3mm	12.0:1	184g	157587	625-166	—	—
RVT1000R (RC51)	00-01	999cc	100mm	STD	11.5:1	367g	184333	625-178	—	—
VTR1000F Super Hawk	97-01	996cc	98mm	STD	11.5:1	385g	149139	625-174	* Uses O.E.M rings	—
CBR1100XX Blackbird	97-01	1195cc	81mm	+2mm	11.5:1	223g	153766	625-176	—	—

Kawasaki

KSF400A KFX400 **ATV**	03-06	398cc	90mm	STD	12.0:1	286g	180297	625-520	—	—
KSF400A KFX400 **ATV**	03-06	434cc	94mm	+4mm	12.0:1	280g	183051	625-521	—	—
KLX400	2003	398cc	90mm	STD	12.0:1	286g	180297	625-520	—	—
KLX400	2003	434cc	94mm	+4mm	12.0:1	280g	183051	625-521	—	—
KLX650	93-96	650cc	100mm	STD	10.5:1	378g	129225	625-620	—	—
ZX750 Ninja ZX-7R	91-95	791cc	73mm	+2mm	12.0:1	194g	153765	625-615	—	—
ZX750P Ninja ZX-7R	96-03	770cc	74mm	+1mm	13.0:1	188g	149299	625-640	—	—
ZX750N Ninja ZX-7RR	1996	770cc	74mm	+1mm	13.0:1	188g	149299	625-640	—	—
ZX900B Ninja ZX-9R (Flat Top)	94-97	924cc	74mm	+1mm	13.0:1	188g	156026	625-645	—	—
ZX900C/E Ninja ZX-9R	98-01	936cc	76.5mm	+1.5mm	12.0:1	208g	157592	625-625	—	—
KZ900/1000 (early KZ)	76-80	1015cc	70mm	STD	10.25:1	193g	137712	625-600	607-110	607-200
KZ900/1000 (early KZ)	76-80	1075cc	72mm	+2mm	8.5:1	195g	125083	625-601	607-111	607-200
KZ900/1000 (early KZ)	76-80	1075cc	72mm	+2mm	10.25:1	201g	125473	625-602	607-111	607-200
KZ900/1000 (early KZ)	76-80	1200cc	76mm*	+6mm	10.25:1	220g	132493	625-603	607-112	607-200
ZX1100C/D Ninja ZX-11	90-00	1109cc	78mm	+2mm	12.0:1	212g	133996	625-610	607-135	607-240
ZX1100E GPz1100	95-96	1109cc	78mm	+2mm	12.0:1	212g	133996	625-610	—	—
ZR1100C ZRX1100	99-00	1109cc	78mm	+2mm	12.0:1	212g	133996	625-610	—	—
ZX1200 Ninja ZX12R	00-05	1198cc	83mm	STD	13.0:1	236g	222109	625-631	—	—
ZX1200 Ninja ZX12R	00-05	1287cc	86mm	+3mm	13.0:1	264g	192315	625-630	—	—

Royal Enfield

Enfield 500				STD	9.5:1		182560	625-950	—	—

Suzuki

DR350R/S	90-99	441cc	89mm	+10mm	10.5:1	275g	130928	625-400	607-009 (kit)	kit only
DR350R/S	90-99	442cc	89.25mm	+10.25mm	10.5:1	277g	131242	625-401	607-009 (kit)	kit only
DR350R/S	90-99	443cc	89.50mm	+10.5mm	10.5:1	283g	131241	625-402	607-009 (kit)	kit only
DR-Z400	00-06	398cc	90mm	STD	12.0:1	286g	180297	625-520	—	—
DR-Z400	00-06	434cc	94mm	+4mm	12.0:1	280g	183051	625-521	—	—
LTZ400 **ATV**	03-07	398cc	90mm	STD	12.0:1	286g	180297	625-520	—	—
LTZ400 **ATV**	03-07	434cc	94mm	+4mm	12.0:1	280g	183051	625-521	—	—
DR650	90-98	650cc	100mm	STD	10.5:1	375g	136633	625-406	—	—
SV650	99-06	677cc	83mm	+2mm	13.0:1	239g	169253	625-510	—	—
GSXR750	00-03	791cc	74mm	+2mm	12.5:1	—	222104	Custom	—	—
GSXR750	00-03	812cc	75mm	+3mm	12.5:1	—	222103	Custom	—	—
GSXR750W	93-95	907cc	77mm**	+7mm	13.0:1	196g	138983	625-420	607-150	—
GSXR1000	01-04	1070cc	76mm	+3mm	13.5:1	180g	192322	625-425	—	—
GS1100 Pro-Mod	81-83	1394cc	82mm		12.0:1	287g	144259	625-478	—	—
GS1100 (Drag Race)	81-83	1500cc	85mm	+13mm	12.5:1	294g	190680	625-480	—	—
GS1100 (Dome)	81-83	1134cc	74mm	+2mm	13.5:1	214g	130298	625-470	607-100	607-203
GS1100 (Dome)	81-83	1197cc	76mm*	+4mm	13.5:1	226g	128820	625-471	607-101	607-204
GS1100 (Dome)	81-83	1260cc	78mm*	+6mm	13.5:1	239g	130299	625-472	607-116	607-204
GS1100 (Dome)	81-83	1295cc	79mm**	+7mm	13.5:1	227g	127402	625-473	607-117	607-205
GS1100 (Dome)	81-83	1327cc	80mm**	+8mm	13.5:1	239g	130300	625-474	607-118	607-215
GS1100 (Dome)	81-83	1394cc	82mm**	+10mm	13.5:1	247g	130301	625-475	607-119	607-215
GS1100 (Dome)	81-83	1428cc	83mm**	+11mm	13.5:1	248g	130302	625-476	607-120	607-215
GS1100 (Dome)	81-83	1500cc	85mm**	+13mm	14.0:1	272g	138271	625-477	607-125	607-205
GS1100 (Dome)	81-83	1570cc	87mm	+14mm	15.0:1	298g	146085	625-479	—	—

Piston Kits

Suzuki

Model	Year	Displ.	Bore	Over Size	Comp. Ratio	Weight	JE Kit #	Piston Kit #	Head Gasket #	Base Gasket#
GS1100 (Flat Top)	81-83	1134cc	74mm	+2mm	10.25:1	209g	125491	625-450	607-100	607-203
GS1100 (Flat Top)	81-83	1170cc	75mm	+3mm	10.25:1	211g	125490	625-451	607-100	607-203
GS1100 (Flat Top)	81-83	1197cc	76mm*	+4mm	10.25:1	222g	128323	625-452	607-101	607-204
GS1100 (Flat Top)	81-83	1260cc	78mm*	+6mm	10.5:1	232g	128324	625-453	607-102	607-204
GS1100 (Flat Top)	81-83	1327cc	80mm**	+8mm	11.0:1	237g	129310	625-454	607-103	607-215
GS1100 (Flat Top)	81-83	1360cc	81mm**	+9mm	11.25:1	240g	129311	625-455	607-145	607-215
GS1100 (Flat Top)	81-83	1394cc	82mm**	+10mm	11.5:1	250g	129312	625-456	607-119	607-215
GS1100 (Flat Top)	81-83	1428cc	83mm**	+11mm	11.7:1	261g	129313	625-457	607-120	607-215
GS1100 (Flat Top)	81-83	1463cc	84mm**	+12mm	11.8:1	262g	129314	625-458	607-128	607-215
GS1100 (Flat Top)	81-83	1500cc	85mm**	+13mm	12.0:1	270g	129315	625-459	607-125	607-205
GSXR1100W	93-98	1117cc	77mm	+1.5mm	12.3:1	219g	131367	625-445	607-137	607-244
GSXR1100W	93-98	1146cc	78mm	+2.5mm	12.8:1	228g	155930	625-448	—	—
GSXR1100W	93-98	1195cc	79.5mm		13.0:1	224g	129682	625-446	607-138	607-244
GSXR1100	89-92	1127cc	78mm	STD	13.0:1	232g	129855	625-430	607-146	607-245
GSXR1100	89-92	1186cc	80mm	+2mm	13.0:1	225g	127641	625-431	607-153	607-245
GSXR1100	89-92	1201cc	80.5mm	+2.5mm	13.0:1	233g	155544	625-439	—	—
GSXR1100	89-92	1216cc	81mm	+3mm	13.0:1	236g	127642	625-432	607-136	607-246
GSXR1100	89-92	1246cc	82mm*	+4mm	13.0:1	244g	128885	625-433	607-147	607-246
GSXR1100	89-92	1277cc	83mm*	+5mm	13.0:1	236g	127643	625-434	607-147	607-247
GSXR1100	89-92	1277cc	83mm*	+5mm	15.0:1	232g	132495	625-435	607-147	607-247
GSXR1100	89-92	1340cc	85mm*	+7mm	13.0:1	244g	127644	625-436	607-151	607-247
GSXR1100	89-92	1340cc	85mm*	+7mm	15.0:1	245g	130894	625-437	607-151	607-247
GSXR1100	89-92	1371cc	86mm*	+8mm	13.5:1	258g	127645	625-438	607-127	607-247
GS1150 (Dome)	84-85	1197cc	76mm		13.5:1	226g	131097	625-500	607-115	607-204
GS1150 (Dome)	84-85	1327cc	80mm	+6mm	13.5:1	240g	134358	625-501	607-118	607-215
GS1150 (Dome)	84-85	1428cc	83mm	+9mm	13.5:1	265g	134360	625-503	607-120	607-215
GS1150 (Dome)	84-85	1500cc	85mm	+11mm	14.0:1	248g	138329	625-504	607-125	607-205
GS1150 (Flat Top)	84-85	1327cc	80mm	+6mm	11.0:1	236g	134355	625-490	607-118	607-215
GS1150 (Flat Top)	84-85	1394cc	82mm	+8mm	11.5:1	261g	134356	625-491	607-119	607-215
GS1150 (Flat Top)	84-85	1428cc	83mm	+9mm	11.7:1	241g	134357	625-492	607-120	607-215
GS1150 (Flat Top)	84-85	1500cc	85mm		12.0:1	254g	136857	625-493	607-125	607-205
GSX1300R Hayabusa	99-07	1299cc	81mm	STD	12.5:1	239g	167679	625-515	—	—
GSX1300R Hayabusa	99-07	1363cc	83mm	+2mm	12.8:1	248g	167680	625-516	—	—
GSX1300R Hayabusa	99-07	1397cc	84mm	+3mm	13.0:1	246g	172945	625-517	—	—

Yamaha

YZ250F/WR250F	01-04	249cc	77mm	STD	13.5:1	170g	221798	—	—	—
YZ250F/WR250F	01-04	262cc	79mm	+2mm	13.0:1	181g	247943	—	—	—
YZ400F/WR400F	98-99	399cc	92mm	STD	12.5:1	251g	157595	625-225	—	—
YZ426F/WR426F	00-01	426cc	95mm	STD	13.5:1	262g	175000	625-230	—	—
YZ426F/WR426F	00-01	446cc	97mm	+2mm	12.5:1	277g	175001	625-231	—	—
TT500/XT500/SR500	76-81	540cc	90mm	+3mm	11.0:1	342g	130798	625-200	—	—
TT600/XT600	84-96	621cc	97mm	+2mm	11.5:1	373g	138330	625-210	—	—
YFM660 Grizzly	02-07	660cc	100mm	STD	10.75:1	367g	190253	625-234	—	—
YFM660 Grizzly	02-07	686cc	102mm	+2mm	10.75:1	368g	189576	625-235	—	—
YFM660 Grizzly	02-07	660cc	100mm	STD	12.0:1	367g	199654	625-236	—	—
YFM660 Grizzly	02-07	686cc	102mm	+2mm	12.0:1	368g	201158	625-237	—	—
YFM660R Raptor	01-05	660cc	100mm	STD	10.75:1	367g	190253	625-234	—	—
YFM660R Raptor	01-05	686cc	102mm	+2mm	10.75:1	368g	189576	625-235	—	—
YFM660R Raptor	01-05	660cc	100mm	STD	12.0:1	367g	199654	625-236	—	—
YFM660R Raptor	01-05	686cc	102mm	+2mm	12.0:1	368g	201158	625-237	—	—
FZ1000 FZ1	01-03	997cc	74mm	STD	13.0:1	177g	174998	625-215	—	—
FZR1000	89-95	1040cc	77mm	+1.5mm	12.0:1	204g	138328	625-220	607-139	607-250
RX1		997cc	74mm	STD	13.0:1	177g	174998	625-215	—	—
YZF-R1	99-03	997cc	74mm	STD	13.0:1	177g	174998	625-215	—	—

Piston Pin Bearings

Sold each. ***Made in Japan.***

Honda ATV

Model	Year	OEM Reference	Order No.
ATC250R	81-86	91015-357-003	623-900
FL250ROdyssey	81-84	91015-357-003	623-900
TRX250R	86-89	91015-357-003	623-900

Honda Offroad

CR80R	85-01	91002-GC4-711	623-902
CR80RB	00-01	91002-GC4-711	623-902
CR250R	81-96	91015-357-003	623-900

Kawasaki ATV

KXF250A1/A2 Tecate 4	87-88	13033-1010	623-930
KXT250A1/A2 Tecate 3	84-85	13033-1010	623-930
KXT250B1/B2 Tecate 3	86-87	13033-1010	623-930

Kawasaki Offroad

KDX80C1/C2/C3/C4	85-88	13033-1003	623-931
KX80E1/E2/E3/G1/G2	83-87	13033-1003	623-931
KDX250A1/B1/B2/B3/B4	80-84	13033-1010	623-930
KDX250DD1/D2/D3/D4	91-94	13033-1010	623-930
KT250/A2 Trials	74-75	13033-1010	623-930
KX250/A/A3	74-76	13033-1010	623-930
KX250A4/A5/A6/A7/B1	78-82	13033-1010	623-930
KX250C1/C2/D1/D2	83-86	13033-1010	623-930
KX250E1/F1/G1/H1/H2/J1/J2	87-93	13033-1010	623-930
KX250K1/K2/K3/K4/K5/L1/L2	94-00	13033-1010	623-930
F9/A/B/C-350	72-75	13033-1010	623-930

Suzuki ATV

ALT50D/E	83-84	09263-12015	623-920
LT50E/F/G/H Quadrunner	84-87	09263-12015	623-920
LT250RF/RG Quadracer	85-86	09263-18021	623-921

Suzuki Offroad

DS80C/N/T/X/Z/D	78-83	09263-12015	623-920
RM80D-W	83-98	09263-14016	623-902
RL250L/M Trials	74-75	09263-18021	623-921

Yamaha ATV

YF60S Moto-4	1986	93310-210M0-00	623-910
YT60L/N Tri-Zinger	84-85	93310-210M0-00	623-910
		93310-210L7-00	
YT125G/H/J/K/L/N Tri-Moto	80-85	93310-216L2-00	623-911
YFS200 Blaster	88-95	93310-316H6-00	623-914
YFZ350Banshee	87-95	93310-316H6-00	623-914

Yamaha Offroad

PW50H/J/K Y-Zinger	81-83	93310-210M0-00	623-910
PW50N/S/T Y-Zinger	85-87	93310-210M0-00	623-910
PW50A-J1 Y-Zinger	90-97	93310-210M0-00	623-910
YZ100C/D/E/F/G/H/J/K	76-83	93310-216L2-00	623-911
DT125B/C	75-76	93310-216L2-00	623-911

Yamaha Offroad

Model	Year	OEM Reference	Order No.
DT125E/F/G/H	78-81	93310-216L2-00	623-911
IT125G/H	80-81	93310-216L2-00	623-911
MX125A/B/C	74-76	93310-216L2-00	623-911
YZ125X	1976	93310-216L2-00	623-911
YZ125A/B/C/D/E/F/G/H	74-81	93310-216L2-00	623-911
YZ125J/K/L/N/S/T/U/W/A	82-90	93310-216L2-00	623-911
IT200L/N/S	84-86	93310-316H6-00	623-914
YZ250L/M/N/P/R/S1/T1/V/W	99-07	93310-218A6-00	623-900

Kawasaki Personal Watercraft

Model	Year	OEM Reference	Order No.
JS300A1-A5 300 SX	87-91	13033-1010	623-930
JS300B1/B2/B3	86-88	13033-1010	623-930
JB650A1/A2/A3/A4 Jet Mate	89-92	13033-1010	623-930
JF650A1-A10 650 X2	86-95	13033-1010	623-930
JF650B1-B8 Tandem Sport	89-96	13033-1010	623-930
JL650-A1/A2/A3/A4/A5 SC	91-95	13033-1010	623-930
JS650A1/A2/A3/A4 650 SX	87-90	13033-1010	623-930
JS650B1/B2/B3 650 SX	91-93	13033-1010	623-930

Sudco Part Number to OEM Cross Reference

Honda

OEM Reference	Dimensions	Order No.
91015-357-003	18 x 22 x 22mm	623-900
91002-GC4-711	14 x 18 x 16mm	623-902

Kawasaki

13033-1010	18 x 22 x 23.8mm	623-930
13033-1003		623-931

Suzuki

09263-12015		623-920
09263-18021	18 x 23 x 24mm	623-921
09263-14016	14 x 18 x 16mm	623-902

Yamaha

93310-210M0-00		623-910
93310-216L2-00	17 x 20 x 20mm	623-911
93310-316H6-00	16 x 21 x 23mm	623-914
93310-218A6-00	18 x 22 x 22mm	623-900

Piston Kits

ART ATV Piston Kits

All **ART** Piston Kits come with piston, ring set, wrist pin, and PIN clips. ***Made in Japan.***

Honda

Application	Year	Piston Size	Piston Kit	Rings
ATC110	81-85	Std	———	———
(Std. Bore 52mm)		.25mm	———	624-011R
		.50mm	———	624-012R
		.75mm	———	624-013R
		1.00mm	———	———
		1.25mm	———	624-015R
		1.50mm	———	624-016R
ATC185	1980	Std	———	———
ATC185C	80-83	.25mm	———	624-021R
XL185S (rings only)	79-83	.50mm	———	———
XR185 (rings only)	1979	.75mm	———	624-023R
(Std. Bore 63mm)		1.00mm	———	———
		1.25mm	———	624-025R
		1.50mm	———	624-026R
ATC200	81-83	Std	———	———
ATC200E	82-83	.25mm	———	———
ATC200ES	1984	.50mm	———	———
ATC200M	84-85	.75mm	———	624-043R
ATC200S	84-86	1.00mm	———	624-044R
TRX200 Fourtrax200	1984	1.25mm	———	624-045R
(Std.Bore 65mm)		1.50mm	———	624-046R
ATC250ES Big Red	85-87	Std	———	———
ATC250SX	85-87	.25mm	———	———
TRX250 Fourtrax 250	85-87	.50mm	———	624-062R
Std. Bore 74mm)		.75mm	———	624-063R
		1.00mm	———	624-064R
(				
ATC250R	81-83	Std	———	624-050R
(Std.Bore 70mm)		.25mm	———	624-051R
		.50mm	———	624-052R
		.75mm	———	624-053R
		1.00mm	———	624-054R
		1.25mm	———	624-055R
		1.50mm	———	624-056R
ATC250R	1984	Std	———	624-080R
(Std.Bore 70mm)		.25mm	———	624-081R
		.50mm	———	624-082R
		.75mm	———	624-083R
		1.00mm	———	624-084R
ATC250R	85-86	Std	624-070	624-070R
TRX250R Fourtrax	85-86	.25mm	———	624-071R
(Std.Bore 66mm)		.50mm	———	624-072R
		.75mm	———	624-073R
		1.00mm	———	———
		1.25mm	———	624-075R
		1.50mm	———	624-076R
FL250 Odyssey	77-84	Std	———	624-150R
(Std.Bore 70mm)				

Kawasaki

Application	Year	Piston Size	Piston Kit	Rings
KXT250B1/B2 Tecate	86-87	Std.	624-601	624-601R
KX250D2	1986			
(Std.Bore 70mm)				
KX250C1/C2/D1	83-85	Std	———	624-602R

Suzuki

ALT125D/E/F/G	83-86	.25mm	624-411	624-411R
LT125D/E/F/G/H	83-87	.50mm	———	———
(Std.Bore 57mm)		.75mm	624-413	624-413R
		1.00m	———	624-414R
ALT185	1985	.25mm	624-401	624-401R
LT185	84-87	.50mm	———	624-402R
		.75mm	624-403	624-403R
		1.00mm	———	624-404R
LT230GEF/GEG	85-86	Std	———	———
LT230EH/EJ/EK/EL	87-90	.25mm	———	———
LT230EM/EN/EP Quadsport	91-93	.50mm	———	———
LTF230G/H Quadsport	86-87	.75mm	———	624-423R
(Std.Bore 66mm)		1.00m	———	624-424R
LT250RF/RG Quadracer	85-86	Std	624-430	624-430R
(Std.Bore 70mm)		.25mm	———	———
		.50mm	624-432	624-432R
		.75mm	624-433	624-433R
		1.00mm	624-434	624-434R
		1.25mm	624-435	624-435R
		1.50mm	624-436	624-436R
LT250RH/RJ/RK Quadracer	87-89	.25mm	———	624-481R
LT250RL/RM/RN	90-92	.50mm	624-482	———
(Std.Bore 67mm)		.75mm	624-483	624-433R
		1.00mm	———	———
		1.25mm	624-485	———
		1.50mm	624-486	———
LT500RH/RJ Quadracer	87-88	Std	———	624-440R
LT500RK/RL Quadracer	89-90	.25mm	624-441	624-441R
(Std.Bore 86mm)		.50mm	624-442	624-442R
		.75mm	624-443	624-443R
		1.00mm	624-444	624-444R

Yamaha

YFM200DXS/DXT Moto-4	86-87	Std	———	624-200R
YFM200DU/DXW Moto-4	88-89	.25mm	———	624-201R
YTM200K/L/N Tri-Moto	83-85	.50mm	———	624-202R
YTM200EK/EL Tri-Moto	83-84	.75mm	———	624-203R
YTM200ERN Tri-Moto	1985	1.00mm	———	624-204R
(67mm bore)				
YFM225S/T/U Moto-4	86-88	Std	———	———
YTM225DXK/DXL Moto-4	83-84	.25mm	624-211	624-211R
YTM225DXN Tri-Moto	1985	.50mm	624-212	624-212R
YTM225DRN/DRS Tri-Moto	85-86	.75mm	624-213	624-213R
(70mm bore)		1.00mm	624-214	624-214R
YTZ250N Tri-Z	1985	Std	———	624-220R
(68mm bore)		.25mm	———	624-221R
		.50mm	———	624-222R
		.75mm	———	624-223R
		1.00mm	———	624-224R

Shindy Products ATV Piston Kits

High quality replacement piston kits meet or exceed OEM specifications. Kits include piston, ring set, wrist pin and cir clips. ***Made in Japan.***

Honda

Model	Year	Size	Piston Kit	Replacement Piston Rings
TRX400FM Fourtrax Foreman	2002	Std.	———	627-100R
TRX400FW Fourtrax Foreman	95-01	0.25	———	627-101R
TRX400FW Fourtrax Foreman	2003	0.50	———	———
		0.75	———	———
		1.00	627-104	———

Kawasaki

KLF220A1-A15 Bayou 220	88-02	Std.	———	———
		0.25	———	———
		0.50	627-602	———
		0.75	———	———
		1.00	———	———
KEF300A1-A6 Lakota 300	95-00	Std.	———	———
KEF300B1-B3 Lakota Sport	01-03	0.25	———	———
KLF300B1-B17 Bayou 300	88-04	0.50	627-612	———
KLF300C1-C16 Bayou 4x4	89-04	0.75	———	———
KVF300A1-A4 Prairie 4x4	99-02	1.00	———	———
KVF300B1-B4 Prairie 300	99-02			

Yamaha

YFB250D-H Timberwolf 2WD	92-96	Std	627-200	———
YFB250FW Timberwolf 4WD	94-00	0.25	627-201	———
YFB250U Timberwolf 2WD	96-98	0.50	———	———
YFM250B Bruin 250 2WD	05-06	0.75	———	———
YFM250W/A/B Moto-4	89-01	1.00	———	———
YFM250X Beartracker	99-04			
YFM350ERT-ERG Moto-4	87-95	Std.	———	627-210R
YFM350FW Big Bear 4WD	87-99	0.25	———	———
YFM350FXG-FXT Wolverine	95-05	0.50	———	———
YFM350U Big Bear 2WD	96-99	0.75	———	———
YFM350XT-XS/XSC Warrior	87-04	1.00	———	———
YFM400FW-FWK Kodiak 4WD	87-98	Std.	———	627-210R
YFM400FWB Kodiak 4WD	1999	0.25	———	———
YFM400FAH Kodiak 4WD Hunter	2000	0.50	———	———
YFM400FA Kodiak 4WD	2000	0.75	———	———
		1.00	———	———

Piston Rings

Made in Japan to OEM specifications. Sold in sets for one piston. Order qt required. Use with OEM Pistons.

Honda

Model	Year	Size	OEM Reference	Order No.
CB900C Custom	80-82	0.25	13021-438-004	624-115R
CB900F Super Sport	81-82	0.25	13021-438-004	624-115R
CBX (1047cc)	79-82	0.25	13021-438-004	624-115R
GL1000K Goldwing	75-79	0.25	13021-371-004	624-120R
GL1000L Goldwing LTD	1976	0.25	13021-371-004	624-120R
GL1100 Goldwing	80-83	0.25	13021-463-000	624-124R
GL1100A Aspencade	82-83	0.25	13021-463-000	624-124R
GL1100I Interstate	80-83	0.25	13021-463-000	624-124R

Kawasaki

KZ400A1/A2 Deluxe	77-78	0.50	13025-5013	624-651R
KZ400D/D3/D4	75-77	0.50	13025-5013	624-651R
KZ400S/S2/S3 Special	75-77	0.50	13025-5013	624-651R
KZ440A1/A2/A3/A4 LTD	80-83	0.50	13025-5015	624-654R
KZ440B1/B2	80-81	0.50	13025-5015	624-654R
KZ440D1/D2/D3/D4/D5 LTD Belt	80-83	0.50	13025-5015	624-654R
KZ440G1 Belt	1983	0.50	13025-5015	624-654R
H2/A/B/C-750 Mach IV	72-75	0.50	13025-045	624-675R

Suzuki

GS450ET/EX/EZ	80-82	0.50	12140-44110-050	624-451R
GS450GAZ/GAD Automatic	82-83	0.50	12140-44110-050	624-451R
GS450GAF Automatic	1985	0.50	12140-44110-050	624-451R
GS450LT/LX/LZ/LD	80-83	0.50	12140-44110-050	624-451R
GS450LF/LG/LH/LJ	85-88	0.50	12140-44110-050	624-451R
GS450TX/TZ/TXZ/TXD	81-83	0.50	12140-44110-050	624-451R
GS550B/C/EC/N/EN/ET	77-80	0.50	12140-47031-050	624-454R
GS550LN/LT/LX/LZ	79-82	0.50	12140-47031-050	624-454R
GS550MZ	1982	0.50	12140-47031-050	624-454R
GS550TX	1981	0.50	12140-47031-050	624-454R
GS850GN/GT/GX/GZ/GD	79-83	0.50	12140-45120-050	624-466R
GS850GLT/GLX/GLZ/GLD	80-83	0.50	12140-45120-050	624-466R
GS1000C /EC/N/EN	78-79	0.50	12140-49001-050	624-469R
GS1000ET	1980	0.50	12140-49001-050	624-469R
GS1000GT/GX	80-81	0.50	12140-49001-050	624-469R
GS1000LN	1979	0.50	12140-49001-050	624-469R
GS1000SN/ST	80-81	0.50	12140-49001-050	624-469R
GS1100ET/EX/EZ/ED	80-83	0.50	12140-49220-050	624-472R
GS1100GZ/GLZ/GD/GLD	82-83	0.50	12140-49220-050	624-472R

Yamaha

RD400C/D/E/F	76-79	0.25	1A1-11601-25-00	624-251R
XV750H/J/K Virago	81-83	Std.	4X7-11610-00-00	624-271R
XV750MK Midnight Virago	1983	Std.	4X7-11610-00-00	624-271R

Connecting Rod Kits

Vesrah Connecting Rod Kits

Vesrah connecting rod kits include connecting rod, crank pin bearing, crank pin, thrust washers (as required) and piston pin bearing for 2-stroke. ***Made in Japan..*** **(* Thrust washers not in kit.)**

Honda ATV

Model	Year	Vesrah Ref.	Order No.
ATC70*	78-85	VA-1001	623-001
TRX70*	86-87	VA-1001	623-001
ATC90/K1/K2/K3*	70-75	———	———
ATC90*	76-78	———	———
ATC110*	82-85	VA-1003	———
ATC185	1980	VA-1005	623-005
ATC185S	81-83	VA-1005	623-005
ATC200	81-83	VA-1005	623-005
ATC200E	82-83	VA-1005	623-005
ATC200ES	1984	VA-1005	623-005
ATC200M	84-85	VA-1005	623-005
ATC200S	84-86	VA-1005	623-005
ATC200X	83-85	VA-1005	623-005
TRX200 Fourtrax 200	1984	VA-1005	623-005
TRX200 Fourtrax 200	90-91	VA-1012	623-012
TRX200D Fourtrax 200 Type II	91-97	VA-1012	623-012
TRX200SX	86-88	VA-1012	623-012
ATC250ES Big Red	85-87	VA-1014	———
ATC250R	81-84	VA-1006	———
ATC250R	85-86	VA-1009	623-009
ATC250SX	85-87	VA-1014	———
TRX250 Four Trax	85-87	VA-1014	———
TRX250 Recon	97-01	VA-1015	———
TRX250EX Sportrax 250EX	01-06	VA-1015	———
TRX250R Four Trax 250R	1986	VA-1009	623-009
TRX250TE Fourtrax Recon ES	02-06	VA-1015	———
TRX250TE Recon	2006	VA-1015	———
TRX250TM Fourtrax Recon	02-06	VA-1015	———
TRX250X Four Trax	87-88	VA-1013	623-013
TRX250X Four Trax	91-92	VA-1013	623-013
TRX300 Four Trax	88-00	VA-1010	———
TRX300EX Four Trax	93-00	VA-1010	———
TRX300EX Sport Trax	01-06	VA-1010	———
TRX300FW FourTrax 300	1988	VA-1010	———
TRX300FW FourTrax 300	90-00	VA-1010	———
ATC350X	85-86	VA-1011	623-011
TRX350 Fourtrax 4x4	86-87	VA-1011	623-011
TRX350D Fourtrax Foreman 4x4	86-87	VA-1011	623-011
TRX400FW Fourtrax Foreman	95-01	VA-1017	623-017
TRX450ES Fourtrax Foreman ES	98-01	VA-1017	623-017
TRX450S Fourtrax Foreman S	98-01	VA-1017	623-017

Honda Ofroad

Model	Year	Vesrah Ref.	Order No.
CR80R	86-02	VA-5009	———
CR80RB	00-02	VA-5009	———
CR85R	03-07	VA-5009	———
CR85RB	03-07	VA-5009	———
CR125R	90-07	VA-5014	———
XR185	1979	VA-1005	623-005
XL185S	79-83	VA-1005	623-005
CR250R	81-01	VA-5001	623-5001
CR250R	02-07	VA-5015	———
CRF250R	04-06	VA-5016	———
CR500R	87-01	VA-5004	———

Kawasaki Street

KZ200A1/A1A/A2	78-79	VA-4001	623-601
KZ250W1 LTD Belt	1983	VA-4004	623-604
H1/A/B/C/D/E/F-500 Mach II	69-75	VA-4902	623-699
KH500A8	1976	VA-4902	623-699
H2/A/B/C-750 Mach IV	72-75	VA-4801	623-698

623-698 H2 Rod Kit does not include the piston pin bearing

Kawasaki ATV

KSF50A1/A2/A3/A6F KFX 50*	03-06	VA-3001	623-401
KSF80A1/A2/A3/A6F KFX80	03-06	VA-3008	623-408
KLF110A1/A2 Mojave	86-87	VA-4006	623-606
KLF110B1/B2 Mojave	86-87	VA-4006	623-606
KLT110A1/A2/A3	84-86	VA-4006	623-606
KLT160A1	1985	VA-4007	623-607
KLT200A1/A2/A3/A4/A4A	81-83	VA-4001	623-601
KLT200B1	1983	VA-4002	623-602
KLT200C1/C2	83-84	VA-4002	623-602
KLF220A1-A15 Bayou 220*	88-02	VA-4009	623-4009
KLF250A1-A3/A6F/A7F Bayou 250*	03-07	VA-4009	623-4009
KLT250A1	1982	VA-4003	———
KLT250A2	1983	VA-4004	623-604
KLT250C1/C2/C3 Prairie 250	83-85	VA-4004	623-604
KLT250P1 Police	1984	VA-4004	623-604
KEF300A1-A6 Lakota 300	95-00	VA-4008	623-608
KEF300B1/B2/B3 Lakota Sport	01-03	VA-4008	623-608
KLF300A1/A2 Bayou 300	86-87	VA-4008	623-608
KLF300B1-B17 Bayou 300	88-04	VA-4008	623-608
KLF300C1-C16 Bayou 300 4x4	89-04	VA-4008	623-608
KVF300A1-A4 Prairie 300 4x4	99-02	VA-4008	623-608
KVF300B1-B4 Prairie 300	99-02	VA-4008	623-608

Kawasaki Dual Sport & Offroad

KX60A1/A2	83-84	VA-8007	623-8007
KX60B1-B14	85-98	VA-8007	623-8007
KX60B15/B16/B17/B18/B19	99-03	VA-7017	623-7017
KX65A1/A2/A3/A4/A5/A6/A6F/A7F	00-07	VA-7017	623-7017
KDX80C1/C2/C3/C4/C5	84-88	VA-8006	———
KX80E2/E3	84-85	VA-8006	———
KX80G1/G2	86-87	VA-8006	———
KX80J2 Big Wheel	1987	VA-8006	———
KX80L1/L2/L3	88-90	VA-8006	———
KX80N1/N2/N3	88-90	VA-8006	———
KX80R1-R7	91-97	VA-8006	———
KX80T1-T4 Big Wheel	91-94	VA-8006	———
KX80W1/W2/W3	98-00	VA-8009	———
KX85A1/A2/A3/A4/A5/A6F/A7F	01-07	VA-8009	———
KX100B5/B6/B7	95-97	VA-8006	———
KX100C1/C2/C3	98-00	VA-8009	———
KX100D1/D2/D3/D4/D5/D6F/D7F	01-07	VA-8009	———
KX125K1/K2/K3/K4	94-97	VA-8003	623-8003

Kawasaki Dual Sport & Offroad

Model	Year	Vesrah Ref.	Order No.
KX125K5	1998	VA-8008	—
KX125L1/L2/L3/L4	99-02	VA-8008	—
KX125M1/M2/M3	03-05	VA-8010	—
KDX250D1/D2/D3/D4	91-94	VA-8002	—
KL250A1/A1A/A2/A3/A4 Dual Sport	78-81	VA-4003	—
KL250C1 Dual Sport	1983	VA-4004	623-604
KLX250A1/A2	79-80	VA-4003	—
KX250C1/C2	83-84	VA-8002	—
KX250D1/D2	85-86	VA-8002	—
KX250F1/G1	88-89	VA-8002	—
KX250H1/H2	90-91	VA-8002	—
KX250J1/J2	92-93	VA-8002	—
KX250K1/K2/K3/K4/K5	94-98	VA-8002	—
KX250L1/L2/L3	99-01	VA-8002	—
KX250L4	2002	VA-8011	—
KX250M1/M2	03-04	VA-8011	—
KX250R1/R6F/R7F	05-07	VA-8011	—
KX500A1/A2/B1/B2	83-86	VA-8001	—
KX500C1/D1	87-88	VA-8001	—
KX500E1-E16	89-04	VA-8001	—

Suzuki ATV

ALT50D/E Quadrunner*	83-84	VA-3001	—
LT-A50K2/K3/K4/K5*	02-05	VA-3001	—
LT50E/F/G/H*	84-90	VA-3001	—
LT80H-Y Quadrunner	87-00	VA-3008	623-408
LT80K1/K2/K3/K4/K5/K6 Quadsport	01-06	VA-3008	623-408
ALT125D/E/F/G 3x6*	83-86	VA-3002	623-402
LT125D/E/F/G/H Quadrunner*	83-87	VA-3002	623-402
LT230EH-EP Quadrunner	87-93	VA-3004	—
LT230GEF/GEG Quadrunner	85-86	VA-3004	—
LT230SF/SG/SH/SJ Quadsport 230	85-88	VA-3004	—
LT-F230G/H	86-87	VA-3004	—
LT250EFF/EFG Quadrunner*	85-86	VA-3005	—
LT250RF/RG Quadracer	85-86	VA-3003	623-403
LT-4WDH-WDW 4x4*	87-98	VA-3005	—
LT-F250J-K1 Quadrunner 250*	88-01	VA-3005	—
LT-F250K2/K3/K4/K5/K6 Ozark*	02-06	VA-3005	—
LT-F250FX/FY/FK1/FK2 Quadrunner*	99-02	VA-3005	—
LTF300FX-FK2 King Quad	99-02	VA-3006	623-406
LT-F4WDXM-WDXW King Quad	91-98	VA-3006	623-406
LT-A500FY/FK1 Quadmaster	00-01	VA-3009	623-409
LT-A500FK2-FK6 Vinson 4WD	02-06	VA-3009	623-409

Suzuki Offroad

JR50C-K6*	78-06	VA-3001	—
RM60K3	2003	VA-8007	623-8007
RM65K3/K4/K5	03-05	VA-8007	623-8007
RM80L/M/N/P/R/S	90-95	VA-7010	623-7010
RM80T/V/W/Y/K1	96-01	VA-7010	623-7010
RM125N/P/R/S/T	92-96	VA-7004	—
RM125V/W	97-98	VA-7014	—
RM125X/Y/K1/K2/K3	99-03	VA-7015	—
RM250N/P/R/S	92-95	VA-7001	623-7001
RM250T/V/W/X/Y	96-00	VA-7013	—
RM250K1/K2/K3/K4/K5/K6	01-06	VA-7013	—
RMX250K/L/M/N/P	89-93	VA-7001	—
RMX250R/S/T/V/W	94-98	VA-7001	—

Yamaha ATV

Model	Year	Vesrah Ref.	Order No.
YF60S 4-Zinger*	1986	VA-2001	623-201
YT60L/N Tri-Zinger*	84-85	VA-2001	623-201
YT125G-N Tri Moto	80-85	VA-2002	—
YFS200U-V Blaster	88-06	VA-2009	—
YFS200SEV Blaster	2006	VA-2009	—
YFM225S/T/U Moto-4*	86-88	VA-2005	623-205
YTM225DRN/DRS Tri-Moto*	85-86	VA-2005	623-205
YTM225DXK/DXL/DXN Tri-Moto*	83-85	VA-2005	623-205
YFB250D/E/F/G/H/J Timberwolf*	92-97	VA-2005	623-205
YFB250FWF-FWM/FWMC 4x4*	94-00	VA-2005	623-205
YFB250UH/UJ/UK Timberwolf*	96-98	VA-2005	623-205
YFM250W/A/B Moto-4*	89-91	VA-2005	623-205
YFM250M/MC Beartracker*	2000	VA-2005	623-205
YFM250XL/XLC/XM/XMC*	99-00	VA-2005	623-205
YFM250XN/XHN*	2001	VA-2005	623-205
YFM250XP/XR/XS Beartracker*	02-04	VA-2005	623-205
YTZ250N/S Tri-Z	85-86	VA-6003	623-6003
YFZ350T-V Banshee	87-06	VA-2008	623-208
YFZ350LER/LES	03-04	VA-2008	623-208
YFZ350RB Banshee	2003	VA-2008	623-208
YFZ350SET/SEV	05-06	VA-2008	623-208
YFZ350SPV Banshee	2006	VA-2008	623-208

Yamaha Offroad

PW50A-V Y-Zinger*	90-06	VA-2001	623-201
YZ80E1/F1/G1/H1	93-96	VA-6008	623-6008
YZ80J1/K1/L1/M1/N1	97-01	VA-6008	623-6008
YZ85P/R/S/T/V	02-06	VA-6008	623-6008
YZ125S/T/U/W/A	86-90	VA-6005	—
YZ125B/D/E/F/G/H	91-96	VA-6005	—
YZ125J1/K1/L1/M1	97-00	VA-6013	623-6013
YZ125N/P/R/S1	01-04	VA-6010	—
XT225D/DC-S/SC Serow*	92-04	VA-2005	623-205
WR250ZB-ZJ	91-97	VA-6002	—
YZ250WRW	1989	VA-6003	—
YZ250WRA	1990	VA-6002	—
YZ250J/K/L/N/S/T/U/W	82-89	VA-6003	—
YZ250A1/B1/D1/E1	90-93	VA-6002	—
YZ250F1/G1/H1/J1/K1	94-98	VA-6002	—
YZ250L1/M1/N1	99-01	VA-6009	—
YZ250P/R/S1/T1/V	02-06	VA-6009	—
WR426FN/FP*	01-02	VA-6012	—
YZ426FM/FN/FP*	00-02	VA-6012	—

Oil Filters

Sudco Oil Filters

Sudco Oil Filters are ***Made in Japan*** by the same manufacturers who supply oil filters to the OEM manufacturers. Sudco Oil Filters are made to original manufacturer's specifications for fit, performance and quality. Sold each.

Sudco Part Number to OEM Cross Reference

Honda

OEM Reference	Vesrah	Order No.	Notes
154A1-413-005	SF-1002	631-002	Oil Filter only
15410-MB0-003	SF-1004	631-005	Black Spin-on
15410-MCJ-000	SF-4007	———	Black Spin-on
15410-MCJ-003	SF-4007	———	Black Spin-on
15410-MJ0-405	SF-1004	631-005	Black Spin-on
15410-MM9-003	SF-4005	631-009	Black Spin-on
15410-MM9-013	SF-4005	631-009	Black Spin-on
15410-MT7-003	SF-4005	631-009	Black Spin-on
15410-426-010	SF-1001	631-003	With o-rings
15410-426-010	SF-4004	631-001	Oil Filter only
15412-MEN-671	SF-1009	———	Oil Filter only
15412-300-024	SF-4004	631-001	Oil Filter only
15412-413-005	SF-1002	631-002	Oil Filter only

Kawasaki

16097-0002	SF-4007	———	Black Spin-on
16097-1002	SF-4003	631-603	Oil Filter only
16097-1054	SF-1004	631-005	Black Spin-on
16097-1061	SF-4005	631-009	Black Spin-on
16097-1063	SF-4005	631-009	Black Spin-on
16097-1064	SF-4006	631-606	Black Spin-on
16097-1065	SF-4006	631-606	Black Spin-on
16097-1066	SF-4006	631-606	Black Spin-on
16097-1070	SF-4007	———	Black Spin-on
16097-1072	SF-4007	———	Black Spin-on
16099-002	SF-4001	631-601	Oil Filter only
16099-003	SF-4004	631-001	Oil Filter only
16099-004	SF-4002	631-602	Oil Filter only
52010-0001	SF-3012	———	Oil Filter only
52010-S001	SF-3003	631-402	Oil Filter only
52010-S002	SF-3007	631-403	Oil Filter only
52010-S004	SF-3011	———	Oil Filter only

Polaris ATV

OEM Reference	Vesrah	Order No.	Notes
3084963	SF-4005	631-009	Black spin-on

Oil Filter Bolt

Honda OEM 15420-333-000 Order No. 631-505

***This is a special order item.**

Application: Honda: CB650 79-82, **CB650C Custom** 80-81, **CB650SC Nighhawk** 1982, **CB750F Super Sport** 77-78

Sudco Part Number to OEM Cross Reference

Suzuki

16510-03G00	SF-3009	631-405	Black spin-on
16510-03G00-X07	SF-3009	631-405	Black spin-on
16510-05A00	SF-3008	631-404	Black spin-on
16510-05240	SF-3003	631-402	Oil Filter only
16510-06B00	SF-3009	631-405	Black spin-on
16510-24501	SF-3007	631-408	Oil Filter only
16510-25C00	SF-3007	631-403	Oil Filter only
16510-29F00	SF-3011	———	Oil Filter only
16510-34E00	SF-3009	631-405	Black spin-on
16510-37440	SF-3005	631-408	Oil Filter only
16510-37450	SF-3005	631-408	Oil Filter only
16510-38240	SF-3006	631-409	Oil Filter only
16510-45040	SF-3004-2	631-401.5	With o-rings
K1609-71072	SF-4007	———	Black spin-on
K5201-00001	SF-3012	———	Oil Filter only

OEM Reference	EMGO No.	Order No.	Notes
16500-45810	10-29800	631-412	Oil Filter Only

Yamaha

OEM Reference	Vesrah	Order No.	Notes
1J7-13441-10-00	SF-2002	631-202	With o-rings
1J7-13440-90-00	SF-2002	631-201	With o-rings
1J7-13440-91-00	SF-2002	631-201	With o-rings
1L9-13440-11-00	SF-2001	631-201	With o-rings
1L9-13440-91-00	SF-2001	631-201	With o-rings
1UY-13440-00-00	SF-2005	631-205	Oil Filter only
1UY-13440-01-00	SF-2005	631-205	Oil Filter only
1UY-13440-02-00	SF-2005	631-205	Oil Filter only
3FV-13440-00-00	SF-4005	631-009	Black spin-on
3FV-13440-10-00	SF-4005	631-009	Black spin-on
3UH-E3440-00-00	SF-2004	631-204	Oil Filter only
36Y-13441-00-00	SF-4004	631-001	Oil Filter only
4X7-13440-00-00	SF-2003	631-203	Oil Filter only
4X7-13440-01-00	SF-2003	631-203	Oil Filter only
4X7-13440-90-00	SF-2003	631-203	Oil Filter only
5DM-13440-00-00	SF-2006	———	Black spin-on
5GH-13440-00-00	SF-4005	631-009	Black spin-on
5H0-13440-00-00	SF-2004	631-204	Oil Filter only
5H0-13440-09-00	SF-2004	631-204	Oil Filter only
5JW-13440-00-00	SF-2007	———	Oil Filter only
5JX-13440-00-00	SF-2003	631-203	Oil Filter only
5RU-13440-00-00	SF-3007	631-403	Oil Filter only
5TA-13440-00-00	SF-2008	———	Oil Filter only

K&N Oil Filters

K&N Oil Filters are TUV production monitored. Synthetic filter media provides outstanding filtration at high-flow rates with less pressure drop and will not break down with today's synthetic oils. 17mm hex nut on spin-on oil filters for easy wrench-off installation with cross drilled safety wire holes. Higher burst point than OEM with heavy-duty, steel outer construction. (Spin-on filters) Anti-drain back valve (where applicable) and pre-lubed base gasket ensures a tight steel. Sold each.

K&N Part Number to OEM Cross Reference

Aprilia

OEM Reference	K&N	Order No.
25 61 85	KN-151	631-7151
02 56 187	KN-152	631-7152

Arctic Cat ATV

3436005	KN-132	631-7132
0436001, 0436146, 3402155	KN-138	631-7138
0436001, 0436146, 3402155	KN-138C	631-7138C
	KN-139	631-7139
	KN-204	631-7204

BMW

11412 343 118, 11412 343 452	KN-151	631-7151
11412 337 198, 11421 357 572	KN-161	631-7161
11001 341 616, 11421 460 687, 11421 460 845	KN-163	631-7163

Bombardier ATV

711256185	KN-151	631-7151

Buell

————	KN-171B	631-7171B
————	KN-171C	631-7171C

Cagiva

————	KN-153	631-7153
	KN-138	631-7138
	KN-138C	631-7138C

Ducati

090549960, 44440034A	KN-153	631-7153

Gas Gas

————	KN-112	631-7112

HARLEY DAVIDSON®

OEM Reference	K&N	Order No.
Extra Long Filter		
6381290 Chrome	KN-173C	631-7173C
6381390 Chrome	KN-173C	631-7173C
Long Filter		
6380580A, 6379677A Black with Anti Drain Back Valve	KN-170	631-7170
6380580A, 6379677A Chrome with Anti Drain Back Valve	KN-170C	631-7170C
6373199, 6373199A, 6379899, 6379899A Black without Anti Drain Back Valve	KN-171B	631-7171B
6373199, 6373199A, 6379899, 6379899A Chrome without Anti Drain Back Valve	KN-171C	631-7171C
Short Filter		
6378280 Chrome	KN-172C	631-7172C
6381080A Chrome	KN-172C	631-7172C

Honda

154A1-413-005	KN-111	631-7111
15410-KF0-315	KN-112	631-7112
15412-HM5-A10	KN-113	631-7113
15412-MEB-671	KN-115	631-7115
15412-MEN-671	KN-116	————
15410-MJ0-405 Black Spin-on	KN-202	631-7202
15410-MCJ-003 Black Spin-on	KN-204	631-7204
15410-MM9-013 Black Spin-on	KN-303	631-7303
15410-MM9-013 Chrome Spin-on	KN-303C	631-7303C
15410-426-010	KN-401	631-7401

Husqvarna

800081675	KN-154	631-7154
580 38005000	KN-155	631-7155

Kawasaki

52010-1053	KN-112	631-7112
16099-002	KN-126	631-7126
52010-S004	KN-139	631-7139
16097-1054 Black Spin-on	KN-202	631-7202
16097-1072 Black Spin-on	KN-204	631-7204
52010-0001	KN-207	631-7207
16097-1066 Black	KN-303	631-7303
16097-1066 Chrome	KN-303C	631-7303C
16099-003	KN-401	631-7401

KTM

OEM Reference	K&N	Order No.
580 38005000	KN-155	631-7155
590 38045000	KN-156	631-7156
590 38046000	KN-157	631-7157

Oil Filters

K&N Part Number to OEM Cross Reference

Kymco

———	KN-147	631-7147

MBK

———	KN-143	631-7143

MZ

———	KN-145	631-7145
	KN-151	631-7151

Polaris ATV

2540006	KN-196	631-7196
3084963	KN-303	631-7303
3084963	KN-303	631-7303

Sachs

———	KN-145	631-7145

Suzuki

16510-25C00	KN-132	631-7132
16510-45040	KN-133	631-7133
16510-38240	KN-136	631-7136
16510-37450	KN-137	631-7137
16510-03G00-X07	KN-138	631-7138
16510-03G00-X07 Chrome	KN-138C	631-7138C
16510-29F00	KN-139	631-7139
K5201-00001	KN-207	631-7207

Triumph

T1210200	KN-191	631-7191
1210031T0301	KN-192	631-7192

Yamaha

5TA-13440-00-00	KN-141	631-7141
1UY-13440-02-00	KN-142	631-7142
5H0-13440-09-00	KN-143	631-7143
1L9-13441-11-00	KN-144	631-7144
5JX-13440-00-00	KN-145	631-7145
4X7-13440-90-00	KN-145	631-7145
5DM-13440-00-00	KN-147	631-7147
3FV-13440-10-00	KN-303	631-7303
5GH-13440-00-00	KN-303	631-7303
3FV-13440-10-00 Chrome	KN-303C	631-7303C
5GH-13440-00-00 Chrome	KN-303C	631-7303C
36Y-13441-00-00	KN-401	631-7401

Aprilia

Model	Year	Sudco Order No.	K&N Order No.
ETX 350	85-90	———	631-7151
ETX350 Tuareg Wind	88-90	———	631-7151
Tuareg 600	88-93	———	631-7151
650 Stark	ALL	———	631-7152
Moto 650	95-01	———	631-7151
Pegaso 650	93-00	———	631-7151
Pegaso 650 I.E.	01-04	———	631-7151
Pegaso 650 I.E. Tuscany Tibet Raid	2004	———	631-7151
ETV 1000 Caponord	01-08	———	631-7152
ETV 1000 Caponord Rally Raid	2004	———	631-7152
RST 1000 Futura	01-04	———	631-7152
RSV 1000 R/RSV 1000 R Factory	05-09	———	631-7152
RSV Millie 1000	99-04	———	631-7152
RSV Millie Factory	2004	———	631-7152
RSV Millie R 1000	00-04	———	631-7152
RSV Millie R Nera 1000	2004	———	631-7152
RSV Millie SP 1000	00-02	———	631-7152
SL 1000 Falco	00-08	———	631-7152
Tuono 1000 R	04-10	———	631-7152
Tuono 1000 R Factory	2009	———	631-7152
Tuono Fighter 1000	03-04	———	631-7152

Arctic Cat ATV

250 2x4	99-05	———	631-7132
300 2x4	98-03	———	631-7132
300 4x4	98-05	———	631-7132
375 2x4	2002	———	631-7138
		———	631-7138C
375 4x4	2002	———	631-7138
		———	631-7138C
400 4x4	98-08	———	631-7138
		———	631-7138C
400 4x4 ACT	2008	———	631-7138
		———	631-7138C
400 4x4 Auto	03-05	———	631-7138
		———	631-7138C
400 4x4 Auto ACT	2004	———	631-7138
		———	631-7138C
400 4x4 Auto MRP	2003	———	631-7138
		———	631-7138C
400 4x4 Auto TBX	04-06	———	631-7138
		———	631-7138C
454 2x4	96-98	———	631-7138
		———	631-7138C
454 4x4	96-98	———	631-7138
		———	631-7138C
500 4x4	98-08	———	631-7138
		———	631-7138C
500 4x4 Auto	00-07	———	631-7138
		———	631-7138C
500 4x4 Auto LE	2006	———	631-7138
		———	631-7138C
500 4x4 Auto MRP	2004	———	631-7138
		———	631-7138C
500 4x4 Auto TBX	02-06	———	631-7138
		———	631-7138C
500 4x4 Auto TRV	04-06	———	631-7138
		———	631-7138C
500 Standard	99-08	———	631-7138
		———	631-7138C
650 4x4 Auto	2004	———	631-7204
650 4x4 Auto LE	2004	———	631-7204
650 V-2 4x4	2006	———	631-7204
650 V-2 4x4 Auto	2005	———	631-7204
650 V-2 4x4 Auto LE	2005	———	631-7204
650 V-2 4x4 LE TS	2006	———	631-7204

BMW

Model	Year	Sudco Order No.	K&N Order No.
R45	78-85	———	631-7161
R45N	78-85	———	631-7161
R50/5	69-73	———	631-7161
R60	69-84	———	631-7161
F650 Funduro	93-00	———	631-7151
F650 CS	02-06	———	631-7151
F650 GS	00-07	———	631-7151
F650 GS Dakar	01-07	———	631-7151
F650 ST Strada	97-00	———	631-7151
R65	79-95	———	631-7161
R65 LS	78-85	———	631-7161
K75	87-97	———	631-7163
K75 ABS	1994	———	631-7163
K75 ABS Special Edition	1994	———	631-7163
K75 Special Edition	1994	———	631-7163
K75 /3	1995	———	631-7163
K75 /3 ABS	1995	———	631-7163
K75C	85-88	———	631-7163
K75RT	90-97	———	631-7163
K75RT ABS	91-95	———	631-7163
K75S	86-97	———	631-7163
K75S ABS	91-95	———	631-7163
K75S ABS Special Edition	1994	———	631-7163
K75T	1986	———	631-7163
R75	69-84	———	631-7161

BMW

Model	Year	Sudco Order No.	K&N Order No.
R80	84-95	—	631-7161
R80GS	80-95	—	631-7161
R80R	93-95	—	631-7161
R80RT	84-95	—	631-7161
R80ST	82-90	—	631-7161
R850C	99-02	—	631-7163
R850C Avantgarde	2001	—	631-7163
R850C Boxer	2001	—	631-7163
R850C Classic	2001	—	631-7163
R850GS Boxer	1999	—	631-7163
R850R	95-03	—	631-7163
R850R Boxer	99-01	—	631-7163
R850RT Boxer	1999	—	631-7163
R90	1975	—	631-7161
R90S	69-76	—	631-7161
K1	89-94	—	631-7163
K1 ABS	91-93	—	631-7163
K100	83-90	—	631-7163
K100LT	83-94	—	631-7163
K100RS	83-94	—	631-7163
K100RT	83-94	—	631-7163
R100CS (w/o Oil Cooler)	73-90	—	631-7161
R100GS (w/o Oil Cooler)	87-94	—	631-7161
R100R (w/o Oil Cooler)	87-96	—	631-7161
R100RS (w/o Oil Cooler)	87-96	—	631-7161
R100RT (w/o Oil Cooler)	87-96	—	631-7161
R100S (w/o Oil Cooler)	73-90	—	631-7161
K1100LT ABS	92-99	—	631-7163
K1100LT ABS Special Edition	94-97	—	631-7163
K1100RS	90-95	—	631-7163
R1100GS ABS	93-99	—	631-7163
R1100GS PD	1998	—	631-7163
R1100GS SE	1999	—	631-7163
R1100R	1995	—	631-7163
R1100R	2001	—	631-7163
R1100R ABS	95-00	—	631-7163
R1100R SE	1999	—	631-7163
R1100R Rockster	04-06	—	631-7163
R1100R Rockster Edition 80	2004	—	631-7163
R1100RA/S ABS	1995	—	631-7163
R1100RL ABS	94-01	—	631-7163
R1100RS ABS	93-01	—	631-7163
R1100RS ABS Special Edition	94-95	—	631-7163
R1100RS Special Edition	2000	—	631-7163
R1100RT	94-01	—	631-7163
R1100RT ABS	99-01	—	631-7163
R1100RT SE	2000	—	631-7163
R1100S	99-05	—	631-7163
R1100S ABS	99-05	—	631-7163
R1100S Prep	2004	—	631-7163
R1100S Replica	04-05	—	631-7163
R1100SA	00-01	—	631-7163
R1100SA SE	2000	—	631-7163
R1150GS	99-05	—	631-7163
R1150GS Adventure	02-05	—	631-7163
R1150GS Sport	2003	—	631-7163
R1150R	01-05	—	631-7163
R1150R Rockster	04-06	—	631-7163
R1150RS	02-05	—	631-7163
R1150RT	01-05	—	631-7163
K1200C	1999	—	631-7163
K1200GT	02-05	—	631-7163
K1200LT	02-05	—	631-7163
K1200LT ABS	99-02	—	631-7163
K1200LT Exodus	2003	—	631-7163
K1200LT Lux	2002	—	631-7163
K1200LT SE	02-05	—	631-7163
K1200LTC	99-02	—	631-7163
K1200LTI Icon	99-01	—	631-7163
K1200LTS	99-00	—	631-7163
K1200RS	97-04	—	631-7163
K1200RS Dakar	1999		631-7163
K1200RS SE	02-04		631-7163
R1200C	1999	—	631-7163
R1200C Avantgarde	00-03	—	631-7163

BMW

Model	Year	Sudco Order No.	K&N Order No.
R1200C Classic	01-03	—	631-7163
R1200C Cruiser	99-01	—	631-7163
R1200C Independent	01-04	—	631-7163
R1200C Montauk	2004	—	631-7163
R1200C Phoenix	2001	—	631-7163
R1200C Phoenix	2004	—	631-7163
R1200CL	03-04	—	631-7163

Bombardier

Outlander 330 H.O. 2x4	03-06	—	631-7152
Outlander 330 H.O. 4x4	03-06	—	631-7152
Outlander 400 H.O. 2x4	03-04	—	631-7152
Outlander 400 H.O. 4x4	03-06	—	631-7152
Outlander 400 H.O. 4x4 XT	03-06	—	631-7152
Outlander 650 H.O. 4x4 EFT XT	2006	—	631-7152
Outlander 650 H.O. EFI 4x4	2006	—	631-7152
Outlander Max 400 H.O. 4x4	04-06	—	631-7152
Outlander Max 400 H.O. 4x4 XT	04-06	—	631-7152
DS650	2000	—	631-7151
DS650	01-05	—	631-7152
DS650 Baja	02-04	—	631-7152
DS650 Baja X	2004	—	631-7152
DS650 Racer	01-03	—	631-7152
DS650X	05-06	—	631-7152
Outlander 800 H.O. EFI	2006	—	631-7152
Outlander 800 H.O. EFI XT	2006	—	631-7152
Outlander Max 400 H.O.	04-05	—	631-7152
Outlander Max 400 H.O. XT	04-06	—	631-7152
Outlander Max 650 H.O. EFI 4x4	2006	—	631-7152
Outlander Max 650 H.O. EFI 4x4 XT	2006	—	631-7152
Outlander Max 650 H.O. EFI XT	2006	—	631-7152
Outlander Max 800 H.O. EFI 4x4 XT	2006	—	631-7152
Outlander Max 800 H.O. EFI	2006	—	631-7152
Outlander Max 800 H.O. EFI XT	2006	—	631-7152

Buell

M2 Cyclone 1200	97-02	631-7171B
		631-7171C
M2 Cyclone 1200 Low	01-02	631-7171B
		631-7171C
S1 Lightning 1200	98-99	631-7171B
S1 White Lightning 1200	1998	631-7171B
		631-7171C
S1 White Lightning 1200	2002	631-7171B
		631-7171C
S2 Thunderbolt 1200	94-99	631-7171B
		631-7171C
S2T Thunderbolt 1200	94-99	631-7171B
		631-7171C
S3 Thunderbolt 1200	94-99	631-7171B
		631-7171C
S3T Thunderbolt 1200	94-99	631-7171B
		631-7171C
X1 Lightning 1200	99-02	631-7171B
		631-7171C

Cagiva

Alazzurra 350	All	—	631-7153
Alazzurra 650 GT Sports	82-88	—	631-7153
Alazzurra Sports 650	82-88	—	631-7153
Raptor 650	00-05	—	631-7138
		—	631-7138C
Raptor 650 i.e.	2005	—	631-7138
		—	631-7138C
V Raptor 650	01-04	—	631-7138
		—	631-7138C
Elephant 750	89-98	—	631-7153
Elephant 900	92-97	—	631-7153
900 Gran Canyon	1999	—	631-7153
1000 Navigator	00-05	—	631-7138
		—	631-7138C

Oil Filters

Cagiva

Model	Year	Sudco Order No.	K&N OrderNo.
Raptor 1000	00-05	———	631-7138
		———	631-7138C
V Raptor 1000	00-04	———	631-7138
		———	631-7138C
Xtra Raptor 1000	01-05	———	631-7138
		———	631-7138C

Ducati

350 F3	All	———	631-7153
350 Indiana	All	———	631-7153
350 Pantah	All	———	631-7153
400SS Junior	1992	———	631-7153
400SS Junior Super Sport	93-94	———	631-7153
Monster 400	01-03	———	631-7153
Monster 400 Dark	02-03	———	631-7153
Monster 400 Dark i.e.	2005	———	631-7153
Monster 400 i.e.	2005	———	631-7153
600 SL Pantah Sports	81-85	———	631-7153
600SS	91-98	———	631-7153
M600 Monster	93-01	———	631-7153
620 Sport	2003	———	631-7153
Monster 620	02-06	———	631-7153
Monster 620 Dark	03-06	———	631-7153
Monster 620 Dark MD	2001	———	631-7153
Monster 620 Dark MD	04-05	———	631-7153
Monster 620s	02-03	———	631-7153
Multistrada 620	05-06	———	631-7153
Multistrada 620 Dark	05-06	———	631-7153
650 Indiana Custom	86-88	———	631-7153
748	97-03	———	631-7153
748 Biposto	95-99	———	631-7153
748 SP	94-98	———	631-7153
748 SPS	1999	———	631-7153
748R	00-02	———	631-7153
748S	00-02	———	631-7153
749	04-06	———	631-7153
749 Dark	05-06	———	631-7153
749R	04-06	———	631-7153
749S	03-06	———	631-7153
750 F1 MKII	85-87	———	631-7153
750 Indiana Custom	87-88	———	631-7153
750 Paso	86-90	———	631-7153
750 Sport	1988	———	631-7153
750 Sport	1990	———	631-7153
750 Sport	2002	———	631-7153
750SS	91-99	———	631-7153
750SS	01-02	———	631-7153
750SS i.e.	00-02	———	631-7153
M750 Monster	96-01	———	631-7153
Monster750 Dark	99-00	———	631-7153
Monster750 Dark i.e.	2002	———	631-7153
Monster750 i.e.	2002	———	631-7153
800 Sport	2003	———	631-7153
800SS	03-07	———	631-7153
Monster 800 i.e.	2004	———	631-7153
Monster 800s i.e.	2003	———	631-7153
Monster S2R	05-06	———	631-7153
Monster S2RDark	05-06	———	631-7153
848	08-09	———	631-7153
848 EVO	10-12	———	631-7153
851 Strada	89-92	———	631-7153
888 Strada	92-94	———	631-7153
900 S2	79-85	———	631-7153
900 Sport	2002	———	631-7153
900 Superlight	92-97	———	631-7153
900SS	90-99	———	631-7153
900SS FE	1998	———	631-7153
900SS i.e.	00-02	———	631-7153
MH900e	2001	———	631-7153
Monster 900	93-01	———	631-7153
Monster 900 Dark i.e.	2002	———	631-7153
Monster M900 City	1999	———	631-7153
Monster M900 Cromo	99-01	———	631-7153

Ducati

Model	Year	Sudco Order No.	K&N Order No.
Monster M900 Dark	2000	———	631-7153
Monster M900 S	98-00	———	631-7153
906 Paso Sport	88-91	———	631-7153
907 i.e.	90-93	———	631-7153
916 Biposto	93-98	———	631-7153
916 Senna	96-98	———	631-7153
916 SP	93-98	———	631-7153
916 SPS	93-98	———	631-7153
916 SPS Fogarty Replica (Ltd.Ed.)	1999	———	631-7153
916 Strada	93-98	———	631-7153
916 Monster S4	01-03	———	631-7153
916 ST4	99-03	———	631-7153
944 ST2	97-03	———	631-7153
992 Monster S2R 1000	2006	———	631-7153
992 Paul Smart 1000LE	2006	———	631-7153
992 Sport 1000	2006	———	631-7153
992 ST3	97-03	———	631-7153
992 ST4	2001	———	631-7153
992 ST4S	01-05	———	631-7153
992 ST4 ABS	2005	———	631-7153
996	98-01	———	631-7153
996 Biposto	1999	———	631-7153
996 SPS	99-00	———	631-7153
996R	2001	———	631-7153
996S	00-01	———	631-7153
996S Monoposto	2001	———	631-7153
996 Monoposto	99-01	———	631-7153
996 Monster S4R	03-06	———	631-7153
996 Monster ST4s	01-05	———	631-7153
998	02-03	———	631-7153
998 Matrix	2004	———	631-7153
998 Monoposto	02-03	———	631-7153
998R	2002	———	631-7153
998S	2002	———	631-7153
998S Bayliss	2002	———	631-7153
998S Boston	2002	———	631-7153
998S Monoposto	2002	———	631-7153
999	03-06	———	631-7153
999R	04-06	———	631-7153
999R Fila	03-04	———	631-7153
999R Xerox	2006	———	631-7153
999S	03-06	———	631-7153
1000SS	03-06	———	631-7153
Monster 1000 i.e.	03-05	———	631-7153
Monster 1000S i.e	04-05	———	631-7153
Multistrada 1000 DS	04-06	———	631-7153
Multistrada 1000s DS	05-06	———	631-7153
1098	07-08	———	631-7153
1098S	07-08	———	631-7153
1098S Tricolore	07-08	———	631-7153
1198	09-11	———	631-7153
1198S	09-11	———	631-7153
1198SP	2011	———	631-7153
1198S Corse	2010	———	631-7153
Desmosedici RR	2008	———	631-7153
Diavel	11-16	———	631-7153
Diavel Carbon	11-16	———	631-7153
Diavel Cromo	2012	———	631-7153
Diavel AMG	2012	———	631-7153
Diavel Strade	13-14	———	631-7153
Diavel Dark	13-14	———	631-7153
Diavel Titanium	2015	———	631-7153
GT1000	2015	———	631-7153
GT1000 Touring	2010	———	631-7153
Hypermotard 1100	08-09	———	631-7153
Hypermotard 1100S	08-09	———	631-7153
Hypermotard EVO	10-13	———	631-7153
Hypermotard EVO SP	10-13	———	631-7153
Hypermotard 796	10-13	———	631-7153
Hypermotard SP	13-14	———	631-7153
Streetfighter	09-10	———	631-7153
Streetfighter S	11-13	———	631-7153

Gas Gas

Model	Year	Sudco Order No.	K&N Order No.
EC400 FSE	02-07	———	631-7112
EC450 FSE	03-07	———	631-7112

HARLEY DAVIDSON®

Model	Year	Sudco Order No.	K&N Order No.
XL53C Sportster Custom	99-03	———	631-7170
		———	631-7170C
XL883 Sportster	04-05	———	631-7171B
		———	631-7171C
XL883 Sportster Custom	03-10	———	631-7171B
		———	631-7171C
XL883 Sportster Low	2005	———	631-7171B
		———	631-7171C
XL883R Sportster	02-07	———	631-7170
XLH883	80-84	———	631-7172C
XLH883 Sportster	86-06	———	631-7170
		———	631-7170C
XLH883 Sportster Custom	99-06	———	631-7170
		———	631-7170C
XLH883 Sportster Deluxe	86-95	———	631-7170
		———	631-7170C
XLH883 Sportster Hugger	88-03	———	631-7170
		———	631-7170C
XLH883 Sportster Hugger F/I	1987	———	631-7170
		———	631-7170C
XLH883R Sportster Flat Track	2000	———	631-7170
		———	631-7170C
XL1000 Sportster	84-85	———	631-7170
		———	631-7170C
XLH1000 Sportster	1985	———	631-7171B
		———	631-7171C
XLS1000 Roadster	80-84	———	631-7172C
XLX61 Roadster (from late 1984)	84-85	———	631-7170
		———	631-7170C
XLX61 Sportster (from late 1984)	84-85	———	631-7170
		———	631-7170C
XLH1100 Sportster	86-87	———	631-7170
		———	631-7170C
XLH1100 Sportster Liberty	86-87	———	631-7170
		———	631-7170C
VRSCA V-Rod	02-06	———	631-7174C
VRSCB V-Rod	04-05	———	631-7174C
VRSCD Night Rod	2006	———	631-7174C
VRSCR Street Rod	2006	———	631-7174C
XL1200C Sportster Custom	96-14	———	631-7170
		———	631-7170C
XL1200C Sportster Custom	04-16	———	631-7171B
		———	631-7171C
XL1200R Sportster Roadster	04-05	———	631-7171B
		———	631-7171C
XL1200S Sportster Sport	96-03	———	631-7170
		———	631-7170C
XLH SportsterAnniversary	1993	———	631-7170
		———	631-7170C
XLH1200 Sportster	88-02	———	631-7170
		———	631-7170C
XLH1200 Sportster Custom	99-02	———	631-7170
		———	631-7170C
VRSCSE Screami Eagle V-Rod	2005	———	631-7174C
FLH80 Electra Glide	82-84	———	631-7172C
FLHC Electra Glide Classic	1982	———	631-7172C
FLHR Electra Glide Road King	96-98	———	631-7171B
		———	631-7171C
FLHRI Electra Glide Road King F/I	1996	———	631-7171B
		———	631-7171C
FLHS	1984	———	631-7172C
FLHS Electra Glide Sport	87-93	———	631-7171B
		———	631-7171C
FLHS Sport Glide	82-83	———	631-7172C
FLHT Electra Glide (late 1984)	1984	———	631-7170
		———	631-7170C
FLHT Electra Glide	85-89	———	631-7170
		———	631-7170C
FLHT Electra Glide Standard	95-98	———	631-7170
		———	631-7170C

HARLEY DAVIDSON®

Model	Year	Sudco Order No.	K&N Order No.
FLHTC Electra Glide Classic (non US)	84-85	———	631-7170
		———	631-7170C
FLHTC Electra Glide Classic (non US)	1985	———	631-7171C
FLHTC Electra Glide Classic	86-98	———	631-7170
		———	631-7170C
FLHTCI Electra Glide Classic F/I	96-98	———	631-7170
		———	631-7170C
FLHTCU Electra Glide Ultra Classic	80-82	———	631-7170
		———	631-7170C
FLHTCU Electra Glide Ultra Classic	87-97	———	631-7170
		———	631-7170C
FLHTCU Electra Glide Ultra Classic Anniversary	1993	———	631-7170
		———	631-7170C
FLHTCUI Ultra Classic Electra Glide F/I	1998	———	631-7170
		———	631-7170C
FLST Heritage Softail	87-90	———	631-7170
		———	631-7170C
FLSTC Heritage Softail Classic	88-99	———	631-7170
		———	631-7170C
FLSTF Fat Boy	90-99	———	631-7170
		———	631-7170C
FLSTN Heritage Softail Special	94-98	———	631-7170
		———	631-7170C
FLSTS Heritage Springer	97-99	———	631-7170
		———	631-7170C
FLT	80-90	———	631-7170
		———	631-7170C
FLT80 Tour Glide	80-83	———	631-7171B
		———	631-7171C
FLTC Chrome	1988	———	631-7171B
		———	631-7171C
FLTC Chrome TT	1987	———	631-7171B
		———	631-7171C
FLTC Tour Glide Classic	80-92	———	631-7170
		———	631-7170C
FLTC Ultra Tour Glide Anniversary	1993	———	631-7170
		———	631-7170C
FLTCU Ultra Tour Glide Classic	87-95	———	631-7170
		———	631-7170C
FLTR Road Glide	1998	———	631-7170
		———	631-7170C
FLTR Road Glide F/I	1998	———	631-7170
		———	631-7170C
FXB Sturgis	1980	———	631-7173C
FXB Sturgis	1982	———	631-7173C
FXD Dyna Super Glide	96-98	———	631-7173C
FXDB Dyna Glide Daytona	1992	———	631-7173C
FXDB Dyna Glide Sturgis	1991	———	631-7173C
FXDC Dyna Glide Custom	1992	———	631-7173C
FXDL Dyna Low Rider	93-98	———	631-7173C
FXDS Dyna Convertible	96-98	———	631-7173C
FXDWG Dyna Wide Glide	93-98	———	631-7173C
FXE Super Glide	82-84	———	631-7172C
FXEF Super Glide Fat Bob	84-85	———	631-7172C
FXLR Low Rider Custom	87-94	———	631-7170
		———	631-7170C
FXLR Low Rider Custom Anniversary	1993	———	631-7170
		———	631-7170C
FXR Super Glide	86-93	———	631-7170
		———	631-7170C
FXR Super Glide II	82-83	———	631-7170
		———	631-7170C
FXRC Low Glide Custom	1987	———	631-7170
		———	631-7170C
FXRD GT	1986	———	631-7170
		———	631-7170C
FXRS Low Rider	87-92	———	631-7170
		———	631-7170C
FXRS Low Rider Conv.	89-93	———	631-7170
		———	631-7170C
FXRS Low Rider Sport	87-88	———	631-7171B
		———	631-7171C
FXRS-SP Low Rider Sport	89-93	———	631-7171B
		———	631-7171C

Oil Filters

HARLEY DAVIDSON®

Model	Year	Sudco Order No.	K&N Order No.
FXRT Sport Glide	83-89	—	631-7170
		—	631-7170C
FXST Softail	84-90	—	631-7170
		—	631-7170C
FXST Softail Standard	1999	—	631-7171B
		—	631-7171C
FXSTB Night Train	1999	—	631-7170
		—	631-7170C
FXSTS Softail Custom	86-99	—	631-7170
		—	631-7170C
FXSTS Springer Softail	90-99	—	631-7170
		—	631-7170C
FXSTSB Bad Boy	95-97	—	631-7170
		—	631-7170C
FXWG Wide Glide	82-86	—	631-7172C
FLHR Road King	99-06	—	631-7171B
		—	631-7171C
FLHRCI Road King Classic F/I	99-06	—	631-7171B
		—	631-7171C
FLHRI Electra Glide Road King F/I	00-01	—	631-7171B
		—	631-7171C
FLHRI Road King F/I	03-06	—	631-7171B
		—	631-7171C
FLHRS Road King Custom	04-06	—	631-7171B
		—	631-7171C
FLHRSI Road King Custom F/I	04-06	—	631-7171B
		—	631-7171C
FLHT Electra Glide Standard	99-06	—	631-7171B
		—	631-7171C
FLHTC Electra Glide Classic	99-05	—	631-7171B
		—	631-7171C
FLHTCI Electra Glide Classic F/I	99-06	—	631-7171B
		—	631-7171C
FLHTCUI	99-06	—	631-7171B
Ultra Classic Electra Glide F/I		—	631-7171C
FLHTI Electra Glide Standard	03-06	—	631-7171B
		—	631-7171C
FLHX Street Glide	06-16	—	631-7171B
		—	631-7171C
FLHXI Street Glide F/I	2006	—	631-7171B
FLST Heritage Softail	2006	—	631-7171B
		—	631-7171C
FLSTC Heritage Softail Classic	00-16	—	631-7171B
		—	631-7171C
FLSTF Fat Boy	00-06	—	631-7171B
		—	631-7171C
FLSTFI Fat Boy F/I	01-06	—	631-7171B
		—	631-7171C
FLSTI Heritage Softail F/I	2006	—	631-7171B
		—	631-7171C
FLSTN Softail Deluxe	05-16	—	631-7171B
		—	631-7171C
FLSTNI Softail Deluxe F/I	05-06	—	631-7171B
		—	631-7171C
FLSTSC Softail Springer Classic	05-07	—	631-7171B
		—	631-7171C
FLSTSI Heritage Springer Classic F/I	01-03	—	631-7171B
		—	631-7171C
FLTR Road Glide	99-10	—	631-7171B
		—	631-7171C
FLTRI Road Glide F/I	99-06	—	631-7171B
		—	631-7171C
FXD Dyna Super Glide	99-05	—	631-7171B
		—	631-7171C
FXDBI Street Bob F/I	2006	—	631-7171B
		—	631-7171C
FXDC Dyna Super Glide Custom	2005	—	631-7171B
		—	631-7171C
FXDCI Dyna Super Glide	05-06	—	631-7171B
Custom F/I		—	631-7171C
FXDI Dyna Super Glide F/I	04-06	—	631-7171B
		—	631-7171C
FXDI35 35th Anniversary	2006	—	631-7171B
Super Glide F/I		—	631-7171C

HARLEY DAVIDSON®

Model	Year	Sudco Order No.	K&N Order No.
FXDL Dyna Low Rider	99-05	—	631-7171B
		—	631-7171C
FXDLI Dyna Low Rider F/I	04-06	—	631-7171B
		—	631-7171C
FXDS Dyna Convertible	99-00	—	631-7171B
		—	631-7171C
FXDWG Dyna Wide Glide	99-05	—	631-7171B
		—	631-7171C
FXDWGI Dyna Wide Glide F/I	04-06	—	631-7171B
		—	631-7171C
FXDX Dyna Super Glide Sport	99-04	—	631-7171B
		—	631-7171C
FXDXI Dyna Super Glide Sport F/I	04-05	—	631-7171B
		—	631-7171C
FXDXT Dyna Super Glide T-Sport	01-03	—	631-7171B
		—	631-7171C
FXST Softail Standard	00-06	—	631-7171B
		—	631-7171C
FXSTB Night Train	00-06	—	631-7171B
		—	631-7171C
FXSTBI Night Train F/I	01-06	—	631-7171B
		—	631-7171C
FXSTD Softail Deuce	00-06	—	631-7171B
FXSTDI Softail Deuce F/I	01-06	—	631-7171B
		—	631-7171C
FXSTI Softail Standard F/I	01-06	—	631-7171B
		—	631-7171C
FXSTS Springer Softail	00-06	—	631-7171B
		—	631-7171C
FXSTSI Springer Softail F/I	01-06	—	631-7171B
		—	631-7171C
FLTRSEI2 Screamin Eagle	2001	—	631-7171B
Road Glide		—	631-7171C
FXSTDSE Screamin Eagle	03-04	—	631-7171B
Softail Deuce		—	631-7171C
FLHTCSE Screamin Eagle	03-04	—	631-7171B
Electra Glide		—	631-7171C
FLHTCSE2 Screamin Eagle	2005	—	631-7171B
Electra Glide 2		—	631-7171C
FLhTFSEI Screamin Eagle	2003	—	631-7171B
Road King F/I		—	631-7171C
		—	631-7171C
FLSTFSE Screamin Eagle Fat Boy	2005	—	631-7171B

Honda Street

NX250	88-95	—	631-7112
VT250	83-90	631-002	631-7111
VT250C2 Shadow Spirit	04-09	—	631-7204
VT250C2 Shadow Spirit ABS	13-14	—	631-7204
VTR250 Interceptor	88-90	631-002	631-7111
CB350F Super Sport (4 cylinder)	72-74	631-003	631-7401
CB400A Automatic	1978	631-002	631-7111
CB400F Super Sport	75-77	631-003	631-740
CB400F CB-1	89-92	631-009	631-7303
CB400T1 Hawk I	78-79	631-002	631-7111
CB400TII Hawk II	78-79	631-002	631-7111
CB400T Hawk	80-81	631-002	631-7111
CM400A Automatic	79-81	631-002	631-7111
CM400C Custom	1981	631-002	631-7111
CM400E	80-81	631-002	631-7111
CM400T	79-81	631-002	631-7111
CB450SC Nighthawk 450	82-83	631-002	631-7111
CB450SC Nighthawk 450	85-86	631-002	631-7111
CB450T Hawk	1982	631-002	631-7111
CM450A Automatic	82-83	631-002	631-7111
CM450C Custom	1982	631-002	631-7111
CM450E	82-83	631-002	631-7111
CB500K0/K1/K2 (500 Four)	71-73	631-003	631-7401
CX500	78-79	631-002	631-7111
CX500C Custom	79-82	631-002	631-7111
CX500D Deluxe	79-81	631-002	631-7111
CX500TC Turbo	1982	631-002	631-7111
GB500	89-90	—	631-7112
GL500 Silverwing	81-82	631-002	631-7111
GL500I Silverwing Interstate	81-82	631-002	631-7111

Honda Street

Model	Year	Sudco Order No.	K&N Order No.
VF500C V30 Magna	84-85	631-005	631-7202
VF500F Interceptor	84-86	631-005	631-7202
VT500C Shadow	83-86	631-005	631-7202
VT500FT Ascot	83-84	631-005	631-7202
CB550F Super Sport	75-77	631-003	631-7401
CB550K0/K1 (550 Four)	74-75	631-003	631-7401
CB550K (550 Four)	76-78	631-003	631-7401
CB550SC Nighthawk	1983	631-003	631-7401
CB600F (599)	04-06	———	631-7204
CBR600F Hurricane	87-90	631-009	631-7303
CBR600F2 Hurricane	91-94	631-009	631-7303
CBR600F3 Hurricane	95-98	631-009	631-7303
CBR600SE	1998	631-009	631-7303
CBR600SJR	1996	631-009	631-7303
CBR600F4 Hurricane	99-00	631-009	631-7303
CBR600F4i Hurricane	01-06	———	631-7204
CBR600RR	03-07	———	631-7204
FSC600 Silverwing	01-02	———	631-7204
FSC600A Silverwing	03-07	———	631-7204
FSC600D Silverwing	03-07	———	631-7204
VT600C Shadow VLX	88-89	631-009	631-7303
VT600C Shadow VLX	91-07	631-009	631-7303
VT600C Shadow	99-07	631-009	631-7303
VT600CD Shadow VLX Deluxe	93-07	631-009	631-7303
VT600CD Shadow Deluxe	99-07	631-009	631-7303
VT600CD2 Shadow Deluxe	99-00	631-009	631-7303
CB650	79-82	631-003	631-7401
CB650C Custom	80-81	631-003	631-7401
CB650SC Nighthawk	82-85	631-003	631-7401
CX650C Custom	1983	631-002	631-7111
CX650T Turbo	1983	631-002	631-7111
GL650 Silverwing	1983	631-002	631-7111
GL650I Silverwing Interstate	1983	631-002	631-7111
NT650 Hawk GT	88-91	631-009	631-7303
NX650	88-89	———	631-7112
XL600V Transalp	89-90	631-009	631-7303
CB700SC Nighthawk	84-86	631-005	631-7202
VF700C Magna	84-87	631-005	631-7202
VF700F Interceptor	84-85	631-005	631-7202
VF700S Sabre	84-85	631-005	631-7202
VFR700F/F2 Interceptor	86-87	631-005	631-7202
VT700C Shadow	84-87	631-005	631-7202
CB750 Nighthawk 750	91-03	631-009	631-7303
CB750A Automatic	76-78	631-003	631-7401
CB750C Custom	80-82	631-003	631-7401
CB750F Super Sport	75-82	631-003	631-7401
CB750K0/K1/K2/K3/K4/K5	69-75	631-003	631-7401
CB750K	76-82	631-003	631-7401
CB750L LTD	1979	631-003	631-7401
CB750SC Nighthawk	82-83	631-003	631-7401
RVF750R RC45	1994	———	631-7204
VF750C Magna	82-83	631-005	631-7202
VF750C Magna	1988	631-005	631-7202
VF750C Magna	94-03	631-009	631-7303
VF750CD Magna Deluxe	95-98	631-009	631-7303
VF750C2 Magna Deluxe	97-00	631-009	631-7303
VF750F Interceptor	83-84	631-005	631-7202
VF750S V45 Sabre	82-83	631-005	631-7202
VFR750F Interceptor	1986	631-005	631-7202
VFR750F	90-97	631-009	631-7303
VFR750R (RC30)	1990	631-009	631-7303
VFR800 Crossrunner	11-12	———	631-7204
VFR800 Interceptor	98-15	———	631-7204
VFR800A Interceptor ABS	02-09	———	631-7204
VFR800D Interceptor DLX	14-15	———	631-7204
VT750 C2 Shadow	2001	631-009	631-7303
VT750 C2 Shadow	2012	———	631-7204
VT750 C2B Shadow Phantom	10-11	———	631-7204
VT750 C2B Shadow Phantom	14-15	———	631-7204
VT750C Shadow	1983	631-005	631-7202
VT750C Shadow A.C.E 750	98-00	631-009	631-7303
VT750C Shadow Aero	04-09	———	631-7204
VT750CA Shadow Aero	04-07	———	631-7204
VT750CA Shadow Aero ABS	14-15	———	631-7204
VT750CD Shadow Deluxe	98-02	631-009	631-7303

Honda Street

Model	Year	Sudco Order No.	K&N Order No.
VT750CD2 Shadow Deluxe	98-01	631-009	631-7303
VT750CDA Shadow ACE 750 Deluxe	02-03	631-009	631-7303
VT750CDB Shadow ACE 750 Deluxe	02-03	631-009	631-7303
VT750CDC Shadow ACE 750 Deluxe	02-03	631-009	631-7303
VT750CDD Shadow ACE 750 Deluxe	02-03	631-009	631-7303
VT750DC Shadow Spirit	01-07	631-009	631-7303
VT750DCA Shadow Spirit	03-07	631-009	631-7303
VT750DCB Shadow Spirit	03-07	631-009	631-7303
VT750 RS Shadow	10-11	———	631-7204
PC800 Pacific Coast	89-90	631-009	631-7303
PC800 Pacific Coast	94-98	631-009	631-7303
VFR800FI Interceptor	98-01	631-009	631-7303
VFR800 Interceptor	02-07	———	631-7204
VFR800A Interceptor ABS	02-07	———	631-7204
VT800C Shadow	1988	631-005	631-7202
CB900C Custom	80-82	631-003	631-7401
CB900F Super Sport	81-82	631-003	631-7401
CB900F (919)	02-07	———	631-7204
CBR900RR	93-99	631-009	631-7303
CBR929RR	2001	———	631-7204
CBR929RR	00-01	———	631-7204
CBR954RR	02-03	———	631-7204
CB1000	94-95	631-009	631-7303
CB1000C Custom	1983	631-003	631-7401
CBR1000F Hurricane	87-88	631-009	631-7303
CBR1000F Hurricane	90-91	631-009	631-7303
CBR1000F Hurricane	93-96	631-009	631-7303
CBR1000RR	04-07	———	631-7204
CBX (1047cc six cylinder)	79-82	631-003	631-7401
GL1000 Goldwing	75-79	631-003	631-7401
GL1000L Goldwing LTD	1976	631-003	631-7401
RVT1000R RC51	00-06	———	631-7204
VF1000F Interceptor	1984	631-005	631-7202
VF1000R	85-86	631-005	631-7202
VTR1000F Super Hawk	98-02	631-009	631-7303
VTR1000F Super Hawk	03-05	———	631-7204
CB1100F Super Sport	1983	631-003	631-7401
CBR1100XX Blackbird	97-03	631-009	631-7303
GL1100 Goldwing	80-83	631-003	631-7401
GL1100A Goldwing Aspencade	82-83	631-003	631-7401
GL1100I Goldwing Interstate	80-83	631-003	631-7401
ST1100	91-02	631-009	631-7303
ST1100A (ABS)	92-02	631-009	631-7303
VT1300CR Stateline	10-16	———	631-7204
VT1300CRA Stateline ABS	14-16	———	631-7204
VT1300CS Sabre	10-15	———	631-7204
VT1300CSA Sabre ABS	2014	———	631-7204
VT1300CT Interstate	10-15	———	631-7204
VT1300CTA Interstate ABS	14-15	———	631-7204
VT1300CX Fury	2014	———	631-7204
VTX13CXA Fury ABS	14-16	———	631-7204
VTX1300R	06-09	———	631-7204

Honda ATV

GL1200 Goldwing	1984	631-003	631-7401
GL1200A Goldwing Aspencade	84-87	631-003	631-7401
GL1200I Goldwing Interstate	84-87	631-003	631-7401
GL1200L Goldwing LTD	1985	631-003	631-7401
GL1200SEi Goldwing Aspencade	1986	631-003	631-7401
MUV700 Big Red	10-13	631-002	631-7111
ST1300	03-05	———	631-7204
ST1300A (ABS)	03-05	———	631-7204
SXS700M2 Pioneer	14-16	631-002	631-7111
SXS700M4 Pioneer	14-16	631-002	631-7111
VF1100C V65 Magna	83-86	631-005	631-7202
VF1100S V65 Sabre	84-85	631-005	631-7202
VT1100C Shadow 1100	85-88	631-005	631-7202
VT1100C Shadow 1100	89-07	631-009	631-7303
VT1100C Shadow 1100 Spirit	1997	631-009	631-7303
VT1100C Shadow Spirit	98-07	631-009	631-7303
VT1100C2 Shadow Sabre	00-07	631-009	631-7303
VT1100C2 Shadow 1100 ACE	95-99	631-009	631-7303

Oil Filters

Honda ATV

Model	Year	Sudco Order No.	K&N Order No.
VT1100C2-2 Shadow 1100 ACE	1997	631-009	631-7303
VT1100C3 Shadow Aero	98-02	631-009	631-7303
VT1100D2 Shadow 1100 ACE	1999	631-009	631-7303
VT1100T Shadow 1100 ACE Tourer	98-01	631-009	631-7303
VTX1300C	06-09	—	631-7204
VTX1300R	2003	—	631-7204
VTX1300R	05-07	—	631-7204
VTX1300S (Retro 1300)	03-07	—	631-7204
VTX1300T	08-09	—	631-7204
GL1500 Goldwing	88-90	631-009	631-7303
GL1500A Goldwing Aspencade	91-00	631-009	631-7303
GL1500C Valkyrie	97-00	631-009	631-7303
GL1500C Valkyrie	2003	631-009	631-7303
GL1500CD Valkyrie	01-03	631-009	631-7303
GL1500CF Valkyrie Interstate	99-01	631-009	631-7303
GL1500CT Valkyrie Tourer	97-00	631-009	631-7303
GL1500I Goldwing Interstate	91-96	631-009	631-7303
GL1500SE Goldwing SE	90-00	631-009	631-7303
GL1800 Goldwing	01-06	—	631-7204
GL1800A Goldwing (ABS)	01-06	—	631-7204
NRX1800DA/DB Rune	2004	—	631-7204
NRX1800EA/EB Rune	2004	—	631-7204
VTX1800	02-06	—	631-7204
VTX1800C	02-08	—	631-7204
VTX1800C1	2005	—	631-7204
VTX1800C2	2005	—	631-7204
VTX1800C3	2005	—	631-7204
VTX1800F1	05-06	—	631-7204
VTX1800F2	05-06	—	631-7204
VTX1800F3	05-06	—	631-7204
VTX1800N1	04-06	—	631-7204
VTX1800N2	04-06	—	631-7204
VTX1800N3	04-06	—	631-7204
VTX1800R (Retro 1800)	02-04	—	631-7204
VTX1800R1	04-06	—	631-7204
VTX1800R2	04-06	—	631-7204
VTX1800R3	04-06	—	631-7204
VTX1800S	02-11	—	631-7204
VTX1800S1	04-05	—	631-7204
VTX1800S2	04-05	—	631-7204
VTX1800S3	04-05	—	631-7204
VTX1800T	07-08	—	631-7204
ATC250SX	85-87	—	631-7112
TRX250 Four Trax 250	85-87	—	631-7112
TRX250X Four Trax 250X	87-88	—	631-7112
TRX250X Four Trax 250X	91-92	—	631-7112
TRX300 Four Trax 300	88-97	—	631-7112
TRX300 Four Trax 300	98-00	—	631-7113
TRX300EX Four Trax 300EX	93-97	—	631-7112
TRX300EX Four Trax 300EX	98-00	—	631-7113
TRX300EX Sportrax 300EX	01-07	—	631-7113
TRX300FW Four Trax 300 4x4	1988	—	631-7112
TRX300FW Four Trax 300 4x4	90-97	—	631-7112
TRX300FW Four Trax 300 4x4	98-00	—	631-7113
ATC250ES Big Red	85-87	—	631-7112
ATC350X	85-86	—	631-7112
TRX350 Fourtrax 4x4	86-87	—	631-7112
TRX350D Fourtrax Foreman 4x4	87-89	—	631-7112
TRX350FE Fourtrax Rancher 4x4 ES	00-07	—	631-7113
RX350FM Fourtrax Rancher 4x4	00-07	—	631-7113
TRX350TE Fourtrax Rancher ES	00-07	—	631-7113
TRX350TM Fourtrax Rancher	00-07	—	631-7113
TRX400FM Fourtrax Foreman	01-03	—	631-7113
TRX400FW Fourtrax Foreman 4x4	95-97	—	631-7112
TRX400FW Fourtrax Foreman 4x4	98-01	—	631-7113
TRX400FW Fourtrax Foreman 4x4	2003	—	631-7113
TRX400EX Fourtrax 400EX	99-00	—	631-7113
TRX400EX Sportrax 400EX	01-07	—	631-7113
TTRX450FE Fourtrax Foreman ES	02-03	—	631-7113
TRX450FM Fourtrax Foreman ES	02-03	—	631-7113
TRX450S Fourtrax Foreman S	98-01	—	631-7113
TRX450ES Fourtrax Foreman ES	98-01	—	631-7113
TRX450R Sportrax 450R	04-09	—	631-7116
TRX500FA Fourtrax Rubicon	01-04	631-002	631-7111

Honda ATV

Model	Year	Sudco Order No.	K&N Order No.
TRX500FA Foreman Rubicon	12-14	631-002	631-7111
TRX500FPA Fourtrax Rubicon W/EPS	06-14	631-002	631-7111
TRX500 FPA Fourtrax Foreman 4x4 AT W/PS	11-12	631-002	631-7111
TRX650FA Fourtrax Rubicon	03-05	631-002	631-7111
TRX650FGA Fourtrax Rincon GP	04-05	631-002	631-7111
TRX680FA	06-14	631-002	631-7111
TRX680FA Rincon	06-16	631-002	631-7111
TRX680 FGA Rincon GPScape	04-10	631-002	631-7111

Honda Dual Sport & Offroad

XR200R	84-85	—	631-7112
CRF250R	04-09	—	631-7116
CRF250X	04-09	—	631-7116
NX250	88-89	—	631-7112
XL250R	84-87	—	631-7112
XR250L	91-96	—	631-7112
XR250R	84-04	—	631-7112
XL350R	84-85	—	631-7112
XR350R	83-85	—	631-7112
XR400R	96-04	—	631-7112
CRF450R	03-09	—	631-7116
CRF450X	05-09	—	631-7116
XR500R	83-84	—	631-7112
XL600R	83-87	—	631-7112
XL600V Transalp	89-90	631-009	631-7303
XR600R	85-00	—	631-7112
NX650	88-89	—	631-7112
XR650L	93-07	—	631-7112
XR650R	00-07	—	631-7112

Husaberg Offroad

All 4-Stroke	95-02	—	631-7155
FC450	04-05	—	631-7155
FC550	04-06	—	631-7155
FE450E	04-07	—	631-7155
FE550E	04-08	—	631-7155
FE650E	04-08	—	631-7155

Husqvarna Offroad

701 Enduro	2016	—	631-7155
701 Supermoto	2016	—	631-7155
QM450	07-08	—	631-7154
SM250R	2007	—	631-7154
TC250	02-07	—	631-7154
TE510	04-07	—	631-7154
TE250	02-05	—	631-7154
SM400R	04-05	—	631-7154
TE410E	98-01	—	631-7154
SM450R	04-07	—	631-7154
TC450	02-07	—	631-7154
TE450	02-07	—	631-7154
SM510R	2005	—	631-7154
TC510	2005	—	631-7154
SM610	98-08	—	631-7154
SM610S	00-08	—	631-7154
TE610E	98-01	—	631-7154
TE610E LT	2000	—	631-7154

Kawasaki Street

BN125A4/A5 Eliminator 125	01-02	—	631-7112
BN125A7/A8 Eliminator 125	04-05	—	631-7112
BN125A6F/A7F Eliminator 125	06-07	—	631-7112
EL250B2/B3 Eliminator	88-89	631-001	631-7401
EL250E1/E2/E3 Eliminator 250HS	91-93	631-001	631-7401
EL250 Eliminator 250LX	89-98	631-001	631-7401
EL250 Eliminator SE	88-96	631-001	631-7401
EL252	96-02	631-001	631-7401
EX250 Ninja 250R	86-12	631-001	631-7401
EX250E1/E2 Ninja 250R	86-87	631-001	631-7401
EX250F2/F3/F4 Ninja 250R	88-90	631-001	631-7401
EX250F6-F19 Ninja 250R	92-05	631-001	631-7401

Kawasaki Street

Model	Year	Sudco Order No.	K&N Order No.
EX250F6F/F7F Ninja 250R	06-07	631-001	631-7401
Z250W1 LTD	1983	631-602	631-7123
EX300 Ninja	13-16	631-606	631-7303
EX300 Ninja ABS	13-16	631-606	631-7303
EX30 Ninja ABS KRT Edition	2016	631-606	631-7303
EX300 Ninja ABS SE	2014	631-606	631-7303
EX300 Ninja SE	14-15	631-606	631-7303
KZ400A1/A2 Deluxe	77-78	631-001	631-7401
KZ400B1/B2	78-79	631-001	631-7401
KZ400C1	1978	631-001	631-7401
KZ400/D/D3/D4	74-77	631-001	631-7401
KZ400H1 LTD	1979	631-001	631-7401
KZ400S/S2/S3 Special	75-77	631-001	631-7401
KZ440A1/A2/A3/A4 LTD	80-83	631-001	631-7401
KZ440B1/B2	80-81	631-001	631-7401
KZ440D1/D2/D3/D4/D5 LTD Belt	80-83	631-001	631-7401
KZ440G1 Belt	1982	631-001	631-7401
EN450A1-A6 LTD 454	85-90	631-005	631-7202
EN500A1-A7 Vulcan 500	90-96	631-606	631-7303
EN500C1-C5 Vulcan 500 LTD	96-09	631-606	631-7303
EN500C6-C10 Vulcan 500 LTD	01-05	———	631-7204
EN500C6F/C7F Vulcan 500 LTD	06-07	———	631-7204
EX500A1/A2/A3	87-89	631-005	631-7202
EX500A4/A5/A6/A7	90-93	631-606	631-7303
EX500D1/D2/D3 Ninja 500	94-96	631-606	631-7303
EX500D4-D9 Ninja 500R	97-02	631-606	631-7303
EX500D10/D11/D12 Ninja 500R	03-05	———	631-7204
EX500D6F/D7F Ninja 500R	06-07	———	631-7204
KZ550A1/A2/A3/A4	80-83	631-001	631-7401
KZ550C1/C2/C3/C4 LTD	80-83	631-001	631-7401
KZ550D1 GPz	1981	631-001	631-7401
KZ550F1 Spectre	1983	631-001	631-7401
KZ550F2 LTD	1984	631-001	631-7401
KZ550H1/H2 GPz	82-83	631-001	631-7401
KZ550M1 LTD	1983	631-001	631-7401
ZR550B1/B2/B3/B4 Zephyr	90-93	631-001	631-7401
ZX550A1/A2/A3 GPz	84-86	631-001	631-7401
ZL600A1/A2 Eliminator	86-87	631-001	631-7401
ZL600B2/B3 Eliminator	96-97	631-001	631-7401
ZX600A1/A2/A3 Ninja 600R	85-87	631-001	631-7401
ZX600B1 Ninja 600RX	1987	631-001	631-7401
ZX600C1-C10 Ninja 600R	88-97	631-001	631-7401
ZX600D1/D2/D3/D4 Ninja ZX-6	90-93	631-005	631-7202
ZX600E-E9 Ninja ZX-6	93-01	631-005	631-7202
ZX600E10 Ninja ZX-6	2002	———	631-7204
ZX600E11/E12 ZZR600	03-04	———	631-7204
ZX600F1/F2/F3 Ninja ZX-6R	95-97	631-005	631-7202
ZX600G1/G2 Ninja ZX-6R	98-99	631-005	631-7202
ZX600J1/J2/J3 Ninja ZX-6R	00-02	———	631-7204
ZX600J4 Ninja ZX-6R	2005	———	631-7204
ZX600J6F ZZR600	2006	———	631-7204
ZX600M1/M2 Ninja ZX-6RR	04-05	———	631-7204
ZX600N6F Ninja ZX-6RR	2006	———	631-7204
ZX636B1/B2 Ninja ZX-6R	03-04	———	631-7204
ZX636C1 Ninja ZX-6R	2005	———	631-7204
ZX636C6F Ninja ZX-6R	2006	———	631-7204
ZX636D6F Ninja ZX-6R	2006	———	631-7204
EJ650A3/A4 W650	00-01	———	631-7204
EN650 Vulcan S	15-16	631-606	631-7303
EN650 Vulcan S ABS	15-16	631-606	631-7303
EN650 Vulcan S ABS Cafe	2016	631-606	631-7303
EN650 Vulcan ABS SE	2016	631-606	631-7303
EX650 Ninja	12-16	631-606	631-7303
EX650 Ninja ABS	13-16	631-606	631-7303
EX650R Ninja	07-11	631-606	631-7303
EX650R Ninja	2006	———	631-7204
EX650A6F Ninja 650R	2006	———	631-7204
KZ650B1/B2/B2A/B3	77-79	631-001	631-7401
KZ650C1/C2/C3 Custom	77-79	631-001	631-7401
KZ650D1/D1A/D2 SR	77-78	631-001	631-7401
KZ650E1	1980	631-001	631-7401
KZ650F1	1980	631-001	631-7401
KZ650H1/H2/H3 CSR	81-83	631-001	631-7401
KZ700A1	1984	631-001	631-7401
VN700A1 Vulcan 700	1985	631-005	631-7202

Kawasaki Street

Model	Year	Sudco Order No.	K&N Order No.
ZN700A1 LTD	84-85	631-001	631-7401
KZ750B1/B2/B3/B4 (2-cyl.)	76-79	631-601	631-7126
KZ750E1/E2/E3	80-82	631-001	631-7401
KZ750F1 LTD	1983	631-001	631-7401
KZ750G1 LTD (2-cyl.)	1980	631-601	631-7126
KZ750H1/H2/H3/H4 LTD	80-83	631-001	631-7401
KZ750K1/K2 LTD 2-cyl.	83-84	631-601	631-7126
KZ750L3	1983	631-001	631-7401
KZ750M1 CSR (2-cyl.)	1982	631-601	631-7126
KZ750N1/N2 Spectre	82-83	631-001	631-7401
KZ750R1 GPz	1982	631-001	631-7401
VN750A2-A10 Vulcan 750	86-94	631-005	631-7202
VN750A11-A14 Vulcan 750	95-98	631-005	631-7202
VN750A15-A19 Vulcan 750	99-03	631-606	631-7303
VN750A20/A21 Vulcan 750	04-05	———	631-7204
VN750A6F Vulcan 750	2006	———	631-7204
ZR750C1/C2/C3 Zephyr	91-93	631-001	631-7401
ZR750F2 ZR-7	2000	631-001	631-7401
ZR750H1/H2/H3 ZR-7S	01-03	631-001	631-7401
ZR750K6F Z750S	2006	———	631-7204
ZX750A1/A2/A3 GPz	83-85	631-001	631-7401
ZX750E1/E2 GPz Turbo	84-85	631-001	631-7401
ZX750F1/F2/F3/F4 Ninja 750R	87-90	631-001	631-7401
ZX750H1 Ninja ZX-7	1989	631-009	631-7303
ZX750H2 Ninja ZX-7	1990	631-001	631-7401
ZX750J1/J2 Ninja ZX-7	91-92	631-009	631-7303
ZX750K1/K2 Ninja ZX-7R	91-92	631-009	631-7303
ZX750L1/L2/L3 Ninja ZX-7	93-95	631-009	631-7303
ZX750M1/M2 Ninja ZX-7R	93-94	631-009	631-7303
ZX750N1/N2 Ninja ZX-7RR	96-97	631-009	631-7303
ZX750P1-P8 Ninja ZX-7R	96-03	631-009	631-7303
VN800A1-A5 Vulcan 800	95-99	631-009	631-7303
VN800A6-A11 Vulcan 800	00-05	———	631-7204
VN800B1-B5 Vulcan 800 Classic	96-00	631-009	631-7303
VN800B6-B10 Vulcan 800 Classic	01-05	———	631-7204
VN800C1/C2 Vulcan 800 Drifter	99-00	631-009	631-7303
VN800E1-E4 Vulcan 800 Drifter	01-04	———	631-7204
VN800E6F Vulcan 800 Drifter	2006	———	631-7204
Z1/A/B-900	73-75	631-601	631-7126
KZ900A4/A5	76-77	631-601	631-7126
KZ900B1 LTD	1976	631-601	631-7126
ZL900A1/A2 Eliminator	85-86	631-001	631-7401
ZX900A1/A2/A3 Ninja 900R	84-86	631-001	631-7401
ZX900B1/B2/B3/B4 Ninja ZX-9R	94-97	631-009	631-7303
ZX900C1/C2 Ninja ZX-9R	98-99	———	631-7204
ZX900E1/E2 Ninja ZX-9R	00-01	———	631-7204
ZX900F1/F2 Ninja ZX-9R	02-03	———	631-7204
KZ1000A1/A2	77-78	631-601	631-7126
KZ1000A3/A3A/A4 MKII	79-80	631-601	631-7126
KZ1000B1/B2/B3/B4 LTD	77-80	631-601	631-7126
KZ1000C1/C1A/C2/C3/C4 Police	78-81	631-601	631-7126
KZ1000D1 Z1R	1978	631-601	631-7126
KZ1000D3 Z1R	1980	631-601	631-7126
KZ1000E1/E2 Shaft ST	79-80	631-601	631-7126
KZ1000G1 LTD Classic	1980	631-601	631-7126
KZ1000J1/J2/J3	81-83	631-001	631-7401
KZ1000K1/K2 LTD	81-82	631-001	631-7401
VN1500G1/G1A-G3 1500 Nomad	99-01	———	631-7204
VN1500J1/J2 Vulcan 1500 Drifter	99-00	———	631-7204
VN1500L1 Vulcan 1500 Nomad Fi	2000	631-009	631-7303
VN1500L2-L5 Vulcan Nomad Fi	01-04	———	631-7204
VN1500N-N3 Vulcan 1500 Classic Fi	00-02	———	631-7204
VN1500N4/N6F Vulcan 1500 Classic	05-06	———	631-7204
VN1500P1/P2 Mean Streak	02-03	———	631-7204
VN1500R1-R5 Vulcan 1500 Drifter	01-05	———	631-7204
VN1600A1-A3 Vulcan 1600 Classic	03-05	———	631-7204
VN1600A6F Vulcan 1600 Classic	2006	———	631-7204
VN1600B1/B2 Vulcan 1600 Mean Streak	04-05	———	631-7204
VN1600D1/D6F Vulcan 1600 Nomad	05-06	———	631-7204
VN1600E6F Vulcan 1600 Classic	2006	———	631-7204
VN1600F6F Vulcan 1600 Mean Streak	2006	———	631-7204
VN2000A1/A2 Vulcan 2000	04-05	———	631-7204

Oil Filters

Kawasaki Personal Watercraft

JT1200B1/B2 Jet Ski STX12F	03-04	—	631-7204
JT1200D1 Jet Ski STX12F	2005	—	631-7204
JT1200D6FJet Ski STX12F	2006	—	631-7204
JT1500A1/A2/A6F Jet Ski STX15F	04-06	—	631-7204

Kawasaki ATV

KLT200A1/A2/A3/A4/A4A	81-83	631-602	—
KLT200B1	1983	631-602	—
KLT200C1/C2	83-84	631-602	—
KLF220A1-A15 Bayou 220	88-02	631-602	—
KLF250A1/A2/A3/A6F Bayou 250	03-06	631-602	—
KLT250A1/A2	82-83	631-602	—
KLT250C1/C2/C3 Prairie	83-85	631-602	—
KLT250P1 Police	1984	631-602	—
KSF250A1-A17 Mojave	87-03	631-602	—
KSF250A18 KFX250 Mojave	2004	631-602	—
KEF300A1-A6 Lakota 300	95-00	631-602	—
KEF300B1/B2/B3 Lakota Sport	01-03	631-602	—
KLF300A1/A2 Bayou 300	86-87	631-602	—
KLF300B1-B9 Bayou 300	88-96	631-602	—
KLF300B10-B17 Bayou 300	97-04	631-602	—
KLF300C1-C16 Bayou 300 4x4	89-04	631-602	—
KVF300A1/A2/A3/A4 Prairie 300 4x4	99-02	—	631-7204
KVF300B1/B2/B3/B4 Prairie 300	99-02	—	631-7204
KVF360A1-A6F Prairie 360 4x4	03-06	—	631-7204
KVF360B1/B2/B3/B6F Prairie 360	03-06	—	631-7204
KVF360C1 Prairie 360 4x4	2003	—	631-7204
Advantage Classic			
KVF360C2/C3/C6F Prairie 360 4x4	04-06	—	631-7204
Hardwoods Green HD			
KLF400B1-/B7 Bayou 400 4x4	93-99	631-009	631-7303
KSF400A1/A2/A3 KFX400	03-05	631-7139	
KVF400A1/A2 Prairie 400 4x4	97-98	631-009	631-7303
KVF400B1 Prairie 400	1998	631-009	631-7303
KVF400C1-C4 Prairie 400 4x4	99-02	631-009	631-7303
KVF400D1/D2/D3/D4 Prairie 400	99-02	631-009	631-7303
KVF650A1/A2 Prairie 650 4x4	02-03	—	631-7204
KVF650B1/B2 Prairie 650 4x4	02-03	—	631-7204
Advantage Classic			
KVF650D1/D6F Brute Force 650 4x4	05-06	—	631-7204
KVF650E1 Brute Force 650 4x4	2005	—	631-7204
Realtree Hardwoods Green HD			
KSV700A1/A2/A6F KFX700 V-Force	04-06	—	631-7204
KSV700B1/B2/B6F KFX700 V-Force	04-06	—	631-7204
KSV700C6F KFX700 V-Force	2006	—	631-7204
KVF700A1/A2/A6F Prairie 700 4x4	04-06	—	631-7204
KVF700B1/B2 Prairie 700 4x4	04-05	—	631-7204
Hardwoods Green HD			
KVF700D1/D6F Prairie 700 4x4	05-06	—	631-7204
Team Green Special Edition			
KVF750A1 Brute Force 750 4x4i	2005	—	631-7204
KVF750B1 Brute Force 750 4x4i	2005	—	631-7204
Real Tree Hardwoods Green HD			

Kawasaki Dual Sport & Offroad

KLX110A1/A2/A3/A4/A6F	02-06	—	631-7112
KLX125A1/A2/A3/A6F	03-06	631-403	631-7132
KLX125B1/B2/B3/B6F	03-06	631-403	631-7132
KL250A1/A2/A3/A4/A5	78-82	631-602	—
KL250C1/C2	83-84	631-602	—
KL250D2-D22 KLR250	85-05	631-602	—
KL250G4/G5/G6 Super Sherpa	00-03	—	631-7112
KLX250A1/A2	79-80	631-602	—
KLX250D2/D3/D4	94-96	—	631-7112
KLX250H6F KLX250S Dual Sport	2006	—	631-7112
KX250N1/N2 KX250F	04-05	—	631-7207
KX250T6F KX250F	2006	—	631-7207
KLX300A2-A10 KLX300R	97-05	—	631-7112
KLX300A6F KLX300R	2006	—	631-7112
KLX400A1 KLX400SR Dual Sport	2003	—	631-7139
KLX400B1 KLX400R Offroad	2003	—	631-1739
KX450D6F KX450F	2006	—	631-7112
KL600A1/B1/B2 KLR600	84-86	631-602	—
KL650A1-A19 KLR650	87-05	631-602	—
KL650A6F KLR650	2006	631-602	—

Kawasaki Dual Sport & Offroad

Model	Year	Sudco Order No.	K&N Order No.
KL650B2/B3 Tengai KLR650	90-91	631-602	—
KLX650A1/A2/A3 Offroad	93-95	631-602	—
KLX650C1/C2/C3/C4 Dual Sport	93-96	631-602	—
KLX650D1 Offroad	93-96	631-602	—

KTM Dual Sport & Offroad

250 EXC (1st Filter)	02-05	—	631-7155
250 EXC (2nd Filter)	02-05	—	631-7157
400 EGS (1st Filter)	ALL	—	631-7155
400 EGS (2nd Filter)	ALL	—	631-7156
400 EXC (1st Filter)	1999	—	631-7155
400 EXC (2nd Filter)	1999	—	631-7157
400 EXC Racing (1st Filter)	00-02	—	631-7155
400 EXC Racing (2nd Filter)	00-02	—	631-7157
400 EXC (1st Filter)	04-05	—	631-7155
400 EXC (2nd Filter)	04-05	—	631-7157
400 EXE	ALL	—	631-7155
400 LC4 (1st Filter)	98-02	—	631-7155
400 LC4 (2nd Filter)	98-02	—	631-7156
400 MXC (1st Filter)	99-02	—	631-7155
400 MXC (2nd Filter)	99-02	—	631-7157
400 SX (1st Filter)	99-02	—	631-7155
400 SX (2nd Filter)	99-02	—	631-7157
450 EXC Racing (1st Filter)	03-05	—	631-7155
450 EXC Racing (2nd Filter)	03-05	—	631-7157
450 MXC Racing (1st Filter)	03-05	—	631-7155
450 MXC Racing (2nd Filter)	03-05	—	631-7157
450 SMR (1st Filter)	2005	—	631-7155
525 MXC Desert Racing (1st Filter)	03-05	—	631-7155
525 MXC Desert Racing (2nd Filter)	03-05	—	631-7157
525 MXC Racing (1st Filter)	03-05	—	631-7155
525 MXC Racing (2nd Filter)	03-05	—	631-7157
525 SMR (1st Filter)	04-05	—	631-7155
525 SMR (2nd Filter)	04-05	—	631-7157
525 SX Racing (1st Filter)	03-05	—	631-7155
525 SX Racing (2nd Filter)	03-05	—	631-7157
540 SXS (1st Filter)	ALL	—	631-7155
540 SXS (2nd Filter)	ALL	—	631-7157
620 Duke (1st Filter)	1994	—	631-7155
620 Duke (2nd Filter)	1994	—	631-7156
620 Duke (1st Filter)	96-97	—	631-7155
620 Duke (2nd Filter)	96-97	—	631-7156
620 EGS (1st Filter)	ALL	—	631-7155
620 EGS (2nd Filter)	ALL	—	631-7156
620 EXE	ALL	—	631-7155
620 LSK (1st Filter)	ALL	—	631-7155
620 LSK (2nd Filter)	ALL	—	631-7156
625 SMC	04-05	—	631-7155
625 SXC (1st Filter)	02-05	—	631-7155
625 SXC (2nd Filter)	02-05	—	631-7157
640 Duke II (1st Filter)	99-04	—	631-7155
640 Duke II (2nd Filter)	99-04	—	631-7156
640 LC4 (1st Filter)	98-01	—	631-7155
640 LC4 (2nd Filter)	98-01	—	631-7156
640 LC4 Adventure (1st Filter)	2003	—	631-7155
640 LC4 Adventure (2nd Filter)	2003	—	631-7156
660 SMC (1st Filter)	02-03	—	631-7155
660 SMC (2nd Filter)	02-03	—	631-7157
660 Supermoto (1st Filter)	02-03	—	631-7155
660 Supermoto (2nd Filter)	02-03	—	631-7157

MBK

125 XC Flame	00-03	—	631-7143
125 XC Flame T	95-03	—	631-7143
125 XC K Flame R	97-98	—	631-7143
125 XC Vertex	1997	—	631-7143

MZ

500 Red Star	1997	—	631-7151
500 Saxon Country	91-97	—	631-7151
500 Saxon Fun	91-93	—	631-7151
500 Saxon Sport Fun	1993	—	631-7151

MZ

Model	Year	Sudco Order No.	K&N Order No.
500 Saxon Tour	91-98	———	631-7151
500 Silver Star	95-96	———	631-7151
500 Silver Star Classic	91-92	———	631-7151
500 Silver Star Classic	94-98	———	631-7151
660 Baghira	98-00	———	631-7145
660 Mastiff	98-00	———	631-7145
660 Skorpion	95-01	———	631-7145
660 Skorpion Cup	1999	———	631-7145
660 Skorpion Replica	95-99	———	631-7145
660 Skorpion Sport	94-99	———	631-7145
660 Skorpion Tour	94-99	———	631-7145
660 Skorpion Traveller	96-00	———	631-7145

Polaris

Model	Year	Sudco Order No.	K&N Order No.
Hawkeye 300 2x4	06-10	———	631-7303
		———	631-7303C
Hawkeye 300 4x4	2006	———	631-7303
		———	631-7303C
Magnum 325 2x4	00-02	631-009	631-7303
		———	631-7303C
Magnum 325 4x4	00-02	631-009	631-7303
		———	631-7303C
Trail Boss 325 2x4	00-02	631-009	631-7303
		———	631-7303C
Xpedition 325	00-02	———	631-7303
		———	631-7303C
ATP330	04-05	631-009	631-7303
		———	631-7303C
Magnum 330 2x4	03-05	631-009	631-7303
		———	631-7303C
Magnum 330 4x4	03-05	631-009	631-7303
		———	631-7303C
Magnum 330 4x4 Mossy Oak	2004	631-009	631-7303
		———	631-7303C
Trail Boss 330	03-06	631-009	631-7303
		———	631-7303C
Sportsman 335	99-01	———	631-7303
		———	631-7303C
Sportsman 400 2x4	2001	———	631-7303
		———	631-7303C
Sportsman 400 4x4	01-05	———	631-7303
		———	631-7303C
Xplorer 400L	96-01	———	631-7303
		———	631-7303C
Magnum 425 2x4	96-98	———	631-7303
		———	631-7303C
Magnum 425 4x4	95-98	631-009	631-7303
		———	631-7303C
Magnum 425 6x6	96-97	631-009	631-7303
		———	631-7303C
Ranger 425 2x4	2001	631-009	631-7303
		———	631-7303C
Ranger 425 2x4	2003	631-009	631-7303
		———	631-7303C
Xpedition 425	00-02	———	631-7303
		———	631-7303C
Sportsman 450	2006	———	631-7303
		———	631-7303C
Diesel 455 4x4	99-01	———	631-7303
		———	631-7303C
ATP500 H0	04-05	———	631-7303
		———	631-7303C
Big Boss 500 6x6	98-99	631-009	631-7303
		———	631-7303C
Magnum 500 4x4	99-03	631-009	631-7303
		———	631-7303C
Predator 500	03-06	———	631-7112
Predator 500 TLD	2006	———	631-7112
Predator 500 Troy Lee Edition	2006	———	631-7112
Ranger 500 2x4	04-06	631-009	631-7303
		———	631-7303C
Ranger500 4x4	03-06	631-009	631-7303
		———	631-7303C

Polaris

Model	Year	Sudco Order No.	K&N Order No.
Scrambler 500 4x4	96-06	631-009	631-7303
		———	631-7303C
Sportsman 500	96-02	631-009	631-7303
		———	631-7303C
Sportsman 500 6x6	00-06	———	631-7303
		———	631-7303C
Sportsman 500 EFI	2006	———	631-7303
		———	631-7303C
Sportsman 500 H.O	04-06	———	631-7303
		———	631-7303C
Sportsman 500 H.O.4x4	02-03	———	631-7303
		———	631-7303C
Sportsman 500 H.O. Mossy Oak	2004	———	631-7303
		———	631-7303C
Xplorer 500 4x4	1997	———	631-7303
		———	631-7303C
Sportsman 600 4x4	2003	———	631-7196
Sportsman 600 Twin	2004	———	631-7196
Sportsman 700 4x4	02-03	———	631-7196
Sportsman 700 Twin	2004	———	631-7196
Sportsman 700 Twin EFI	2004	———	631-7196
Sportsman 700 Twin Mossy Oak	2004	———	631-7196

Sachs

125 Roadster	98-01	———	631-7145

Suzuki Street

GN125Z/D	82-83	631-402	———
GN125EM/EN/EP/ER/ES/ET/EV	91-97	631-402	———
GN250Z/D	82-83	631-409	631-7136
GN250F	1985	631-409	631-7136
GN250J	1988	631-409	631-7136
GS250TT/TX	80-81	631-401.5	631-7133
GZ250X/YK1-K5 Marauder	99-05	631-409	631-7136
GS300LZ/LD	82-83	631-401.5	631-7133
GS300LF	1985	631-401.5	631-7133
AN400K3/K4/K5/K6 Burgman	03-06	631-403	631-7132
GN400T/XT/XX/TX/TZ	80-82	———	631-7136
GS400B/XB/C/XC	77-78	631-401.5	631-7133
GSF400M/N/P Bandit	91-93	631-401.5	631-7133
GS425N/EN	1979	631-401.5	631-7133
GS425LN	1979	631-401.5	631-7133
GS450ET/EX/EZ/ED	80-83	631-401.5	631-7133
GS450GAZ/GAD Automatic	82-83	631-401.5	631-7133
GS450GAF Automatic	1985	631-401.5	631-7133
GS450LT/LX/LZ/LD	80-83	631-401.5	631-7133
GS450LF/LG/LH/LJ	85-88	631-401.5	631-7133
GS450ST/SX	81-82	631-401.5	631-7133
GS450TX/TZ/TXZ/TXD	81-83	631-401.5	631-7133
GS500EK-EY	89-00	631-401.5	631-7133
GS500EK1/EK2	01-02	631-401.5	631-7133
GS500FK4/FK5/FK6	04-06	631-401.5	631-7133
GS550B/C/EC/N/EN	77-79	631-401.5	631-7133
GS550ET	1980	631-401.5	631-7133
GS550ED/ESD	1983	631-401.5	631-7133
GS550ES3/ESE/EF/ESF/ESG	83-86	631-401.5	631-7133
GS550LN/LT/LX/LZ/LD	79-83	631-401.5	631-7133
GS550LF/LG	85-86	631-401.5	631-7133
GS550MZ Katana	1982	631-401.5	631-7133
GS550TX	1981	631-401.5	631-7133
GSF600ST/SV/SW/SX/SY Bandit	96-00	631-405	631-7138
GSF600SSK1/SK2/SK3 Bandit	01-03	631-405	631-7138
GSX600FJ-FY Katana	88-00	631-405	631-7138
GSX600FK1/FK2/FK3 Katana	98-03	631-405	631-7138
GSX-R600WN/WP	92-93	631-405	631-7138
GSX-R600V/W/X/Y/K1/K2/K3	97-03	631-405	631-7138
RF600RR/RS/RT	94-96	631-405	631-7138
AN650K3/K4/K5 Burgman	03-05	631-405	631-7138
GR650D/XD Tempter	1983	631-401.5	631-7133
GS650EX/EZ	81-82	631-401.5	631-7133
GS650GX/GZ/GD	81-83	631-401.5	631-7133
GS650GLX/GLZ/GLD	81-83	631-401.5	631-7133
GS650MD Katana	1983	631-401.5	631-7133

Oil Filters

Suzuki Street

Model	Year	Sudco Order No.	K&N Order No.
LS650PG/PH/PJ Savage	86-88	631-408	631-7137
LS650PS/PT/PV/PW/PX/PY Savage	95-00	631-408	631-7137
LS650PK1/PK2/PK3/PK4 Savage	01-04	631-408	631-7137
SV650X/Y/K1/K2/K3/K4/K5	99-05	631-405	631-7138
SV650SX/SY/SK1/SK2/SK3/SK4/SK5	99-05	631-405	631-7138
XN85 Turbo	1983	631-401.5	631-7133
GS700EF/ESF	1985	631-401.5	631-7133
GV700GLF/GLF2 Madura	1985	631-404	———
VS700GLFG	1986	631-404	———
VS700GLFH Intruder	1987	631-405	631-7138
VS700GLPG	1986	631-404	———
VS700GLPH Intruder	1987	631-405	631-7138
VS700GLEFG	1986	631-404	———
VS700GLEFH	1987	631-405	631-7138
VS700GLEPG Intruder	1986	631-404	———
VS700GLEPH Intruder	1987	631-405	631-7138
GS750B/C/EC/N/EN	77-79	631-401.5	631-7133
GS750ET/EX/EZ	80-82	631-401.5	631-7133
GS750ED/ESD	1983	631-401.5	631-7133
GS750LN	1979	631-401.5	631-7133
GS750LT/LX	80-81	631-401.5	631-7133
GS750SD Katana	1983	631-401.5	631-7133
GS750TZ/TD	82-83	631-401.5	631-7133
GSX750FK-FY Katana	89-00	631-405	631-7138
GSX750/FK1/FK2/FK3 Katana	01-03	631-405	631-7138
GSX-R750G/H	86-87	631-404	———
GSX-R750RG	1986	631-404	———
GSX-R750J/K/L/M/N	88-92	631-405	631-7138
GSX-R750WP/WR/WS	93-95	631-405	631-7138
GSX-R750T/V/W/X/Y/K1/K2/K3	96-03	631-405	631-7138
VS750GLPJ-GLPM Intruder	88-91	631-405	631-7138
VL800K1/K2/K3 Intruder Volusia	01-03	631-405	631-7138
VS800GLN-GLY Intruder	92-00	631-405	631-7138
VS800GLK1/GLK2/GLK3 Intruder	01-03	631-405	631-7138
VX800L/M/N/P	90-93	631-405	631-7138
VZ800V/W/X/Y/K1/K2/K3 Marauder	97-03	631-405	631-7138
GS850GN/GT/GX/GZ/GD	79-83	631-401.5	631-7133
GS850GLT/GLX/GLZ/GLD	80-83	631-401.5	631-7133
RF900RR/RS/RT/RV	94-97	631-405	631-7138
RF900RZS	1995	631-405	631-7138
DL1000K2/K3/K4/K5 V-Storm	02-05	631-405	631-7138
GS1000C/EC/N/EN/ET	78-80	631-401.5	631-7133
GS1000GT/GLT/GX/GLX	80-81	631-401.5	631-7133
GS1000LN	1979	631-401.5	631-7133
GS1000SN/ST	79-80	631-401.5	631-7133
GS1000SZ Katana	1982	631-401.5	631-7133
GSX-R1000K1/K2/K3/K4	01-04	631-405	631-7138
SV1000SK3/SK4	03-04	631-405	631-7138
TL1000RW/RX/RY/RK1/RK2/RK3	98-03	631-405	631-7138
TL1000SV/SW/SX/SY/SK1	97-01	631-405	631-7138
GS1100ET/EX/EZ/ED/ESD	80-83	631-401.5	631-7133
GS1100GKZ/GK2/GKD/GKE Shaft	82-84	631-401.5	631-7133
GS1100GZ/GLZ/GD/GLD	82-83	631-401.5	631-7133
GS1100LT	1980	631-401.5	631-7133
GS1100SDKatana	1983	631-401.5	631-7133
GSX1100FJ/FK/FL/FM/FN/FP Katana	88-93	631-405	631-7138
GSX1100GM/GN/GP Shaft	91-93	631-405	631-7138
GSX-R1100G/H/J/K/L/M/N	86-92	631-405	631-7138
GSX-R1100WP/WR/WS/WT/WV/WW	93-98	631-405	631-7138
GS1150ES3/ESE/EF/ESF/EF2	83-85	631-401.5	631-7133
GS1150EG/ESG	83-86	631-401.5	631-7133
GSF1200SV/SW/SX/SY Bandit	97-00	631-405	631-7138
GSF1200SK1-SK5 Bandit	01-05	631-405	631-7138
GSF1200SAV Bandit	1997	631-405	631-7138
GSX1300RX/RY/RK1 Hayabusa	99-01	631-405	631-7138
GSX1300RK2/-RK5 Hayabusa	02-05	631-405	631-7138
GV1200GLF/GLF2/GLG Madura	85-86	631-404	———
GV1400GCG Cavalcade	1986	631-404	———
GV1400GCH Cavalcade	1987	631-405	631-7138
GV1400GDG Cavalcade	1986	631-404	———
GV1400GDH/GDJ Cavalcade	87-88	631-405	631-7138
GV1400GTG Cavalcade	1986	631-404	———
GV1400GTH Cavalcade	1987	631-405	631-7138
		———	631-7138C
VS1400GLFH Intruder	1987	631-405	631-7138

Suzuki Street

Model	Year	Sudco Order No.	K&N Order No.
VS1400GLPH/GLPJ Intruder	87-88	631-405	631-7138
VS1400GLPM-GLPY Intruder	90-00	631-405	631-7138
VS1400GLPK1-GLPK3 Intruder	01-03	631-405	631-7138
VL1500W/X/Y/K1/K2/K3 Intruder LC	98-03	631-405	631-7138
		———	631-7138C

Suzuki ATV

LT160EK/EL/EM/EN Quad	89-92	631-403	631-7132
LT160K3/K4 Quadrunner	03-04	631-403	631-7132
LT-F160M/N/P/R/S/T/V/W/X/Y	91-00	631-403	631-7132
LT-F160	91-01	631-403	631-7132
ALT185F	1985	631-402	———
LT185E/F/G/H	84-87	631-402	———
LT230EH-EP Quadrunner	87-93	631-403	631-7132
LT230GEF/GEG Quadrunner	85-86	631-403	631-7132
LT230SF/SG/SH/SJ Quadsport	85-88	631-403	631-7132
LT-F230G/H	86-87	631-403	631-7132
LT250EF/EFF/EFG Quadrunner	85-86	631-403	631-7132
LT250SK/SL	89-90	631-403	631-7132
LT-F250J/K/L/M/N/P/R/S/T/V/W/X	88-99	631-403	631-7132
LT-F250FK2/FK3/FK4/FK5 Ozark	02-05	631-403	631-7132
LT-F250FX/FY/FK1/FK2 Quad	99-02	631-403	631-7132
LT-Z250K4/K5 Quadsport	04-05	631-403	631-7132
LT300EH/EJ/EK	87-89	631-403	631-7132
LT-F300FX/FY/FK1/FK2 King Quad	99-02	631-403	631-7132
LT-4WDH/J/K/L/M/N 4WD Quad	87-92	631-403	631-7132
LT-4WDP/R/S/T 4WD King Quad	93-96	631-403	631-7132
LT-F4WDXM/N/P/R/S King Quad	92-96	631-403	631-7132
LT-F4WDXT/V/W King Quad	97-99	631-403	631-7132
LT-A400K2 Eiger 2WD Auto	2002	631-405	631-7138
LT-A400K3/K4 Eiger 2WD Auto	03-04	631-405	631-7138
LT-A400FK2 Eiger 4WD	2002	631-405	631-7138
LT-A400FK3/FK4 Eiger Auto 4WD	03-04	631-405	631-7138
LT-F400K2 Eiger 2WD	2002	631-405	631-7138
LT-F400K3/K4 Eiger 2WD	03-04	631-405	631-7138
LT-F400FK2/FK3/FK4 Eiger 4WD	02-04	631-405	631-7138
LT-Z400K3/K4/K5 Quadsport 400	03-05	———	631-7139
LT-A500FY/FK1	00-01	631-405	631-7138
LT-A500FK2/FK3/FK4 Vinson 4WD	02-04	631-405	631-7138
LT-F500FW-FK3 Quadrunner	98-02	631-405	631-7138
LT-F500FK3 Vinson Manual 4WD	2003	631-405	631-7138
LT-F500FK4 Vinson Manual 4WD	2004	631-405	631-7138
LTA700 King Quad 4x4	05-06	631-405	631-7138

Suzuki Dual Sport & Offroad

DR100D/E/F/G/H/J/K/L	83-90	631-402	———
SP100D	1983	631-402	———
DR-Z110K3/K4/K5	03-05	———	631-7112
DR125Z/D/E	82-84	631-402	———
DR125G/H/J	86-88	631-403	631-7132
DR125SER/SES/SET Dual Sport	94-96	631-403	631-7132
DR-Z125K3/K4/K5 Offroad	03-05	631-403	631-7132
DR-Z125LK3/LK4/LK5 Offroad	03-05	631-403	631-7132
SP125G/H/J Dual Sport	86-88	631-403	631-7132
DR200G/H/J	86-88	631-403	631-7132
DR200SET-SEY Dual Sport	96-00	631-403	631-7132
DR200SEK1-SEK5 Dual Sport	01-05	631-403	631-7132
SP200G/H/J Dual Sport	86-88	631-403	631-7132
DR250Z/D Offroad	82-83	631-409	631-7136
DR250F Offroad	1985	631-409	631-7136
DR250L/M/N/P Offroad	90-93	631-409	631-7136
DR250SL-SES Dual Sport	90-95	631-409	631-7136
DR-Z250K1/K2/K3/K4/K5	01-05	631-409	631-7136
SP250Z/D Dual Sport	82-83	631-409	631-7136
SP250F Dual Sport	1985	631-409	631-7136
RM-Z250K4/K5	04-05	———	631-7207
DR350L/M/N/P/R/S/T/V/W/X Offroad	90-99	631-409	631-7136
DR350SL-SEX Dual Sport	90-99	631-409	631-7136
DR370C/N	78-79	———	———
SP370C/N	78-79	———	———
DR-Z400Y/K1/K2/K3/K4 Offroad	00-04	———	631-7139
DR-Z400EY/EK1/EK2/EK3/EK4	00-04	———	631-7139
Offroad Electric Start			

Suzuki Dual Sport & Offroad

Model	Year	Sudco Order No.	K&N Order No.
DR-Z400SY/SK1/SK2/SK3/SK4 Dual	00-04	———	631-7139
SP400T	1980	———	———
RM-Z450K5	2005	———	———
DR500X/Z/D	81-83	631-408	631-7137
SP500X/Z/D Dual Sport	81-83	631-408	631-7137
SP600F Dual Sport	1984	631-408	631-7137
DR650SL-SEY Dual Sport	90-00	631-408	631-7137
DR650SK1-SK5 Dual Sport	01-05	631-408	631-7137

Triumph

Daytona 600	2004	———	631-7191
Speed Four	03-05	———	631-7191
TT600	00-03	———	631-7191
Daytona 650	2005	———	631-7191
Daytona 750	91-95	———	631-7192
Speed Triple 750	1997	———	631-7192
Thunderbird 750	1995	———	631-7192
Trident 750	92-98	———	631-7192
America 800	03-06	———	631-7191
Bonneville 800	01-05	———	631-7191
Bonneville America	2002	———	631-7191
Bonneville T100	02-04	———	631-7191
Speedmaster 800	03-04	———	631-7191
Speed Triple T509	97-98	———	631-7191
Adventurer 900	95-01	———	631-7192
Bonneville T100	05-06	———	631-7191
Daytona 900	94-97	———	631-7192
Daytona 900 Super III	94-97	———	631-7192
Legend 900 TT	99-01	———	631-7192
Speed Triple 900	94-96	———	631-7192
Speedmaster 900	05-06	———	631-7191
Sprint 900	95-98	———	631-7192
Thruxton 900	04-06	———	631-7191
Thunderbird 900	95-03	———	631-7192
Thunderbird Sport 900	95-03	———	631-7192
Thundebolt 900	1996	———	631-7192
Tiger 900	91-00	———	631-7192
Trident 900	91-98	———	631-7192
Trophy 900	91-01	———	631-7192
Daytona 955i (EFI)	99-06	———	631-7191
Daytona T595	97-98	———	631-7191
Speed Triple 955	99-04	———	631-7191
Sprint RS 955	01-03	———	631-7191
Sprint ST 955	01-04	———	631-7191
Tiger 955cc	01-06	———	631-7191
Daytona 1000	91-95	———	631-7192
Speed Triple 1050	05-06	———	631-7191
Sprint ST 1050	05-06	———	631-7191
Daytona 1200	93-97	———	631-7192
Trophy 1200	91-03	———	631-7192
Rocket III 2294	04-06	———	631-7191
Rocket III Classic 2294	04-06	———	631-7191

Yamaha Street

XT125J/K/KC Dual Sport	82-83	631-204	631-7143
XC180K/KC/L//LC/N/NC Riva 180	83-85	631-203	631-7145
XC180ZL/ZLC/ZN/ZNC Riva 180	84-85	631-203	631-7145
SR185H/J	81-82	631-204	631-7143
TW200T/TC-V/VC Trailway	87-06	631-204	631-7143
XC200U/W/A/B Riva 200 (Scooter)	88-91	631-203	631-7145
XC200ZU/ZW/ZA Riva 200Z	88-90	631-203	631-7145
XT200J/K/KC Dual Sport	82-83	631-204	631-7143
XT225D/DC-V/VC Serrow	92-03	631-204	631-7143
SR250G/H/J Exciter	80-82	631-203	631-7145
SR250TH Exciter	80-82	631-203	631-7145
SRX250T/TC	1987	631-204	631-7143
XT250G/H/J/K/KC Dual Sport	80-83	631-203	631-7145
XT250L/LC Dual Sport	1984	631-204	631-7143
XV250U/UC/W/WC/A/AC Route 66	88-90	631-203	631-7145
XV250G/GC-K/KC Route 66	95-98	631-203	631-7145
XV250L/LC Virago	1999	631-203	631-7145

Yamaha Street

Model	Year	Sudco Order No.	K&N Order No.
XV250P/PC/R/S/SC/T/TC Virago 250	02-05	631-203	631-7145
XV250V/VC Virago 250	2006	631-203	631-7145
XT350N/NC-M/MC Dual Sport	85-00	631-204	631-7143
XS360C/D/2D	76-77	631-201	631-7144
FZR400U/SUC/W/SWC/A/SAC	88-90	631-201	631-7144
YP400T/V Majesty (Scooter)	05-06	631-403	631-7132
XS400D/E/F/G/H	77-81	631-201	631-7144
XS4002E/2F	78-79	631-201	631-7144
XS400J/K Maxim	82-83	631-201	631-7144
XS400RJ/RK Seca	82-83	631-201	631-7144
XS400SG/SH/SJ Special	80-82	631-201	631-7144
SR500E/F/G/H	78-81	631-203	631-7145
XT500C/D/E/F/G/H Dual Sport	76-81	631-203	631-7145
XV500K Virago	1983	631-203	631-7145
XV535T/TC/U Virago	87-88	631-203	631-7145
XV535A/AC Virago	1990	631-203	631-7145
XV535E/EC-M/MC Virago	93-00	631-203	631-7145
XV535SF/SFC/SG/SGCVirago	94-95	631-203	631-7145
XV535SH/SHC/SJ/SJC Virago	96-97	631-203	631-7145
XJ550H/J/K Maxim	81-83	631-201	631-7144
XJ550RH/RJ/RK Seca	81-83	631-201	631-7144
XT550J/K Dual Sport	82-83	631-203	631-7145
XZ550RJ/RK Vision	82-83	631-203	631-7145
FJ600L/LC/N/NC	84-85	631-201	631-7144
FZ600S/SC/T/TC/U/UC	86-88	631-201	631-7144
FZ600SS/SSC/T/TC FZ6	04-05	631-009	631-7303
FZR600W/WC/AC	89-90	631-201	631-7144
FZR600RA/RAC	1990	631-201	631-7144
FZR600RB/RBC-RL/RLC	91-99	631-009	631-7303
SRX600S/SC	1986	631-203	631-7145
XJ600SD/SDC-SK/SKC Seca II	92-98	631-009	631-7303
XT600L/LC-EG/EGC Dual Sport	84-95	631-203	631-7145
YX600S/SC-A/AC Radian	86-90	631-201	631-7144
YZF600RG/RGC-RV/RVC	95-07	631-009	631-7303
YZF-R6L/LC-T/TC	99-05	631-009	631-7303
YZF-R6SV/SVC	06-10	631-009	631-7303
XJ650G/H/J/K Maxim	80-83	631-201	631-7144
XJ650LH Midnight Maxim	1981	631-201	631-7144
XJ650LJ/LK Seca Turbo	82-83	631-201	631-7144
XJ650RJ Seca	1982	631-201	631-7144
XVS650AK/AKC-AV/AVC V-Star Classic	98-06	631-203	631-7145
XVS650ATR/ATRC/ATS/ATSC V-Star Silverado	03-04	631-203	631-7145
XVS650ATT/ATTC/ATVATVC V-Star Silverado	05-06	631-203	631-7145
XVS650K/KC-V/VC V-Star Custom	98-06	631-203	631-7145
FZ700T/TC	1987	631-001	631-7401
FZX700S/SC/T/TC Fazer	86-87	631-001	631-7401
XJ700N/NC/S/SC Maxim	85-86	631-201	631-7144
XJ700XN/XNC/XS/XSC Maxim X	85-86	631-201	631-7144
XV700L/LC/N/NC Virago	84-85	631-203	631-7145
XV700CS/CSC/CT/CTC Virago	86-87	631-203	631-7145
XV700SS/SSC Virago	1986	631-203	631-7145
FZ750N/S/SC	85-86	631-001	631-7401
FZ750U/UC	1988	631-001	631-7401
FZR750RT/RU	87-88	631-001	631-7401
XJ750J/K Maxim	82-83	631-201	631-7144
XJ750MK Midnight Maxim	1983	631-201	631-7144
XJ750RH/RJ/RK Seca	81-83	631-201	631-7144
XS750D/2D/E/F	77-79	631-202	———
XS750SE/SF Special	78-79	631-202	———
XV750H/J/K Virago	81-83	631-203	———
XXV750MK Midnight Virago	81-83	631-203	631-7145
XV750U/UC-K/KC Virago	88-98	631-203	631-7145
XV750H1/HC1/J1/JC1 Virago	96-97	631-203	631-7145
YZF750RF/RFC	1994	631-009	631-7303
YZF750RH/RHC~RK/RKC	96-98	631-009	631-7303
TDM850D/DC/E/EC	92-93	631-203	631-7145
XS850G/H	80-81	631-202	———
XS850LG/LH Midnight Special	80-81	631-202	———
XS850SG/SH Special	80-81	631-202	———
XJ900RK Seca	1983	631-201	631-7144
XV920J/K Virago	82-83	631-203	631-7145

Oil Filters

Yamaha Street

Model	Year	Sudco Order No.	K&N Order No.
XV920MK Midnight Virago	1983	631-203	631-7145
XV920RH/RJ	81-82	631-203	631-7145
FZR1000T/TC/U/UC/W/WC/A/AC	87-90	631-001	631-7401
FZR1000B/BC-G/GC	91-95	631-009	631-7303
FZS1000N/NC-S/SC FZ1	01-04	631-009	631-7303
FZS1000SPR/SPRC FZ1	2003	631-009	631-7303
GTS1000AE/AEC/AF/AFC	93-94	631-009	631-7303
XV1000L/LC/N/NC Virago	84-85	631-203	631-7145
YZF1000RJ/RJC	1997	631-009	631-7303
YZF1000RK/RKC	1998	631-009	631-7303
YZF-R1L/LC-V/VZ (R1)	99-06	631-009	631-7303
YZF-R1SPV/SPVC (R1)	2006	631-009	631-7303
50th Anniversary			
FJ1100L/LC/N/NC	84-85	631-001	631-7401
XJ1100J Maxim	1982	631-202	———
XS1100E/F/G/H	78-81	631-202	———
XS1100LG/LH Midnight Special	80-81	631-202	———
XS1100SF/SG/SH Special	79-81	631-202	———
XV1100S/SC-L/LC Virago	86-99	631-203	631-7145
XV1100SH/SHC/SJ/SJCVirago	96-97	631-203	631-7145
XV1100SK/SKC Virago	1998	631-203	631-7145
XVS1100AM/AMC/-AR/ARC	00-03	631-203	631-7145
V-Star 1100 Classic			
XVS1100ATR/ATRC	2003	631-203	631-7145
V-Star 1100 Silverado			
XVS1100AW V-Star 1100 Classic	2003	631-203	631-7145
XVS1100L/LC-V/VC V-Star	99-06	631-203	631-7145
1100 Custom			
FJ1200S/SC/T/TC	86-87	631-001	631-7401
FJ1200W/WC/A/AC/B/BC/D/DC	89-92	631-001	631-7401
FJ1200AD/ADC/AE/AEC (ABS)	92-93	631-001	631-7401
VMX12N/NC/S/SC V-Max	85-86	631-202	———
VMX12U/UC-G/GC V-Max	88-95	631-202	———
VMX12H/HC-V/VC V-Max	96-06	631-009	631-7303
XVZ12TK/L/KC2 Venture	83-84	631-202	———
XVZ12DL/DKC2/DN Venture Royale	84-85	631-202	———
XVZ12TDK Venture Royale	1983	631-202	———
FJR1300R/RC/S/SC/T/TC	03-05	———	631-7148
FJR1300AS/ASC/AT/ATC (ABS)	04-05	———	631-7148
XVZ13T/TC/U/UC Venture	87-88	631-202	———
XVZ13DS/DSC-DE/DEC Royale	86-93	631-202	———
XVZ13AH/AHC-AM/AMC Royal Star	96-00	631-009	631-7303
XVZ13AN/ANC Royal Star Boulevard	2001	631-009	631-7303
XVZ13ATH/ATHC-ATM/ATMC	96-00	631-009	631-7303
Royal Star Tour Classic			
XVZ13LTJ/LTJC-LTM/LTMC	97-00	631-009	631-7303
Royal Star Tour Deluxe			
XVZ1300AH/AHC/-AN/ANC	96-01	631-009	631-7303
Royal Star			
XVZ1300AT Royal Star Tour Classic	96-00	631-009	631-7303
XVZ1300LTJ Royal Star Tour Deluxe	97-01	631-009	631-7303
XVZ1300TF Royal Star Venture MM	2000	631-009	631-7303
XVZ1300TF Royal Star Venture	99-04	631-009	631-7303
XVZ1300TFS Royal Star Midnight	02-04	631-009	631-7303
XV1600AL Road Star	99-03	631-009	631-7303
XV1600ALE Road Star Limited Ed.	2003	631-009	631-7303
XV1600AS Road Star MM Limited	00-03	631-009	631-7303
XV1600AT Road Star Silverado	99-03	631-009	631-7303
XV1600ATLER/ATLERC	2003	631-009	631-7303
Road Star Silverado Limited Edition			
XV1700AS/ASC/AT/ATC Road Star	04-05	631-009	631-7303
XV1700AV/AVC Road Star	2006	631-009	631-7303
XV1700AT Road Star Silverado	04-06	631-009	631-7303
XV1700AMRoad Star Midnight	04-06	631-009	631-7303
XV1700ATM Road Star	04-06	631-009	631-7303
Midnight Silverado			
XV1700PC Road Star Warrior	02-06	631-009	631-7303
XV1700PCRC Road Star Warrior	2003	631-009	631-7303
XV1700PCRCB Road Star Warrior	2003	631-009	631-7303

Yamaha ATV

Model	Year	Sudco Order No.	K&N Order No.
YFM200N Moto-4	1985	631-204	631-7143
YFM200DXS/DXT/DXU/DXW Moto-4	86-89	631-204	631-7143
YTM200K/L/N Tri-Moto	83-84	631-204	631-7143
YTM200EK/EL	83-84	631-204	631-7143
YTM200ERN Tri-Moto	1985	631-204	631-7143
YFM225S/T/U Moto-4	86-88	631-204	631-7143
YTM225DXK/DXL/DXN Tri-Moto	83-85	631-204	631-7143
YTM225DRN/DRS Tri-Moto	85-86	631-204	631-7143
YFB250D/E/F/G/H Timberwolf	92-96	631-204	631-7143
YFB250FWF-FWM/FWMC Timberwolf	94-00	631-204	631-7143
YFB250UH/UJ/UK Timberwolf	96-98	631-204	631-7143
YFM250W/A/B Moto 4	89-91	631-204	631-7143
YFM250M/MC Bear Tracker 2WD	2000	631-204	631-7143
YFM250BT/BV Bruin 250	05-06	631-204	631-7143
YFM250XL/XLC/XM/XMC Bear Tracker	99-00	631-204	631-7143
YFM250XN/XP/XR/XS Bear Tracker	01-04	631-204	631-7143
YFM250XHN/XHP Beartracker	01-02	631-204	631-7143
YFM350AS Bruin 350 Auto 2WD	2004	631-009	631-7303
YFM350BAT/BAV Bruin 2WD	05-06	631-009	631-7303
YFM350ERT/ERU/ERW/ERA Moto-4	87-90	631-205	631-7142
YFM350ERD/ERE/ERF/ERG Moto-4	92-95	631-205	631-7142
YFM350FAS Bruin 350 Auto 4x4	2004	631-009	631-7303
YFM350FAHS Bruin 350 Auto 4x4	2004	631-009	631-7303
Hardwood Camo			
YFM350FAS/FAT Bruin 350 Auto 4WD	04-05	631-009	631-7303
YFM350FAV-B Bruin 4WD	2006	631-009	631-7303
YFM350FAV Bruin 4WD	2006	631-009	631-7303
YFM350FAHS/T/VBruin 4WD Hunter	04-06	631-009	631-7303
YFM350FHL/FHLC Big Bear 4WD	1999	631-205	631-7142
YFM350FWT-FWJ Big Bear 4WD	87-97	631-205	631-7142
YFM350FWBJ/FWBK/FWBKC Big Bear	97-98	631-205	631-7142
YFM350FWBL/FWBLC Big Bear	1999	631-205	631-7142
YFM350FXG-FXK Wolverine	95-98	631-205	631-7142
YFM350FXL/FXLC/FXM/FXMC	99-00	631-205	631-7142
YFM350FXN/FXNC/FXP Wolverine	01-02	631-205	631-7142
YFM350FXR/FXS/FXT Wolverine	03-05	631-205	631-7142
YFM350RSET/RSEV Raptor 350 SE	05-06	631-205	631-7142
YFM350RT/RV Raptor	05-06	631-205	631-7142
YFM350S Raptor	2004	631-205	631-7142
YFM350UH/UJ/UK/UL/ULC Big Bear	96-99	631-205	631-7142
YFM350XT-XS/XSC Warrior	87-04	631-205	631-7142
YFP350U Terrapro	1988	631-204	631-7143
YFU1W/YFU1TW Pro Hauler	1989	631-205	631-7142
YFM400P Big Bear 400 2WD	2002	631-205	631-7142
YFM400S Big Bear 400 2WD	2004	631-205	631-7142
YFM400AM/AMC/AN Kodiak 2WD	00-01	631-009	631-7303
Automatic			
YFM400AR Kodiak 4WD	2003	631-009	631-7303
YFM400FM/FMC Big Bear 4WD	2000	631-205	631-7142
YFM400FPBig Bear 4WD	2002	631-205	631-7142
Real Tree X-Tra			
YFM400FAM/FAMC/FAN Kodiak	00-01	631-009	631-7303
4WD Auto			
YFM400FAP/FAR/FARB Kodiak 4WD	02-03	631-009	631-7303
4WD Auto			
YFM400FAHM/FAHMC Kodiak 4WD	2000	631-009	631-7303
YFM400FAHN/FAHNC Kodiak 4WD	2001	631-009	631-7303
YFM400FHM Big Bear Buckmaster	2000	631-205	631-7142
YFM400FHP Big Bear 400 4WD	2002	631-205	631-7142
YFM400FHAP Kodiak 4x4 Hunter	2002	631-205	631-7142
YFM400FWE/F/G/H/J/K Kodiak	93-98	631-205	631-7142
YFM400FWR Big Bear	2003	631-205	631-7142
YFM400FWAHM/FWAHMC Kodiak	2000	631-009	631-7303
4WD Realtree			
YFM400FWNM/FWNMC Big Bear 4WD	2000	631-205	631-7142
YFM400FWNN Big Bear 4WD	2001	631-205	631-7142
YFM400FWNHM/FWNHMC/FWNHN	00-01	631-205	631-7142
Big Bear Buckmaster 4WD			
YFM400H\P 2WD Real Tree X-tra	2002	631-205	631-7142

Yamaha ATV

Model	Year	Sudco Order No.	K&N Order No.
YFM400NM/NMC/NN Big Bear 2WD	00-01	631-205	631-7142
YFM400NR Big Bear 2WD	2003	631-205	631-7142
YFM400NHN Big Bear 2WD	2001	631-205	631-7142
YFM400FS/FT/FV Big Bear 400 4x4	04-06	631-205	631-7142
YFM400AS Kodiak 400 2WD	2004	631-009	631-7303
YFM400FAS/FAT/FAV Kodiak 4x4	04-06	631-009	631-7303
YFM400FAHS/FAHT/FAHV Kodiak 400 4x4 Hardwoods	04-06	631-009	631-7303
YFM450FAR/FARB Kodiak 4WD Auto	2003	631-009	631-7303
YFM450FAS/FAT Kodiak 450 Auto 4x4	04-05	631-009	631-7303
YFM450FAV Kodiak 450 Auto 4x4	2006	631-009	631-7303
YFM450FAHS/FAHT/FAHV Kodiak 450 Auto 4x4 Hardwoods	04-06	631-009	631-7303
YFM450FXV Wolverine 450 4x4 Sport	2005	631-009	631-7303
YFZ450LES Limited Edition	2004	———	631-7141
YFZ450SET Special Edition	2005	———	631-7141
YFZ450S/T/V	04-06	———	631-7141
YFM600FWAK/FWAL/FWALC Grizzly	98-99	631-203	631-7145
YFM600FWAM/FWAMC Grizzly	2000	631-203	631-7145
YFM660FWAN Grizzly	2001	631-203	631-7145
YFM600FWAHN Hunter Edition	2001	631-203	631-7145
YFM600HM/HMC Grizzly Hunting	2000	631-203	631-7145
YFM660FP Grizzly 660	2002	631-009	631-7303
YFM660FPS Grizzly 660 Metallic Silver	2002	631-009	631-7303
YFM660FR/FS Grizzly 660	03-04	631-009	631-7303
YFM660FAHT Grizzly 660 Hunter	2005	631-009	631-7303
YFM660FHR/FHS Grizzly 660 4X4 Wetlands Hunter Edition	03-04	631-009	631-7303
YFM660FHSWL Grizzly 660 Auto 4x4 Wetland	03-04	631-009	631-7303
YFM660FLES Grizzly 660 Auto 4x4 Limited Edition	2004	631-009	631-7303
YFM660RR/RS/RT Raptor 660	03-05	———	631-7147
YFM660RLER/RLES Raptor Limited Edition Black	03-04	———	631-7147
YFM660RSET Raptor 660 SE	2005	———	631-7147
YFM660FAT/FAV Grizzly 660	05-06	631-009	631-7303
YFM660FAHT/FAHV Grizzly 660 Hunter	05-06	631-009	631-7303
YFM660FAHWT Grizzly 660 Hunter Wetland	2005	631-009	631-7303
YFM660FASET/FASEV Grizzly 660 Special Edition	05-06	631-009	631-7303
YFM660FASEV Grizzly 660 Ducks Unimited Edition	2006	631-009	631-7303
YFM700RV Raptor 700	06-16	631-203	631-7145
YFM700RSPV Raptor 700 50th Anniversary	06-16	631-203	631-7145

Yamaha Dual Sport/ Offroad

Model	Year	Sudco Order No.	K&N Order No.
XT125J/K/KC Dual Sport	82-83	631-204	631-7143
BW200N/S	85-86	631-204	631-7143
BW200ES/ET/EU	86-88	631-204	631-7143
TW200T/TC-V/VC Trailway	87-06	631-204	631-7143
XT200J/K/KC Dual Sport	82-83	631-204	631-7143
TT225S/T	86-87	631-204	631-7143
TT-R225L/LC/M/MC/N/NC	99-01	631-204	631-7143
TT-R225P/PC/R/RC/S/SC	02-04	631-204	631-7143
XT225D/DC-V/VC Serrow	92-03	631-204	631-7143
TT-R230T/TC/V/VC	05-06	631-204	631-7143
TT250G/H/J	80-82	631-203	631-7145
TTR250L/LC-V/VC	99-06	631-205	631-7142
WR250FN/FP	01-02	631-205	631-7142
WR250FR/FS/FT/FV	03-06	———	631-7141
XT250G/H/J/K/KC Dual Sport	80-83	631-203	631-7145
XT250L/LC Dual Sport	1984	631-204	631-7143
YZ250FN/FP Offroad	01-02	631-205	631-7142
YZ250FR/FS/FT/FV	03-06	———	631-7141
BW350T/U	87-88	631-203	631-7145
TT350S/T Offroad	86-87	631-204	631-7143
XT350N/NC-M/MC Dual Sport	85-00	631-204	631-7143
WR400FK/FL/FM Offroad	98-00	631-205	631-7142
YZ400FK/FL Offroad	98-99	631-205	631-7142
WR426FN/FP Offroad	01-02	631-205	631-7142

Yamaha Dual Sport/ Offroad

Model	Year	Sudco Order No.	K&N Order No.
YZ426FM/FN/FP Offroad	00-02	631-205	631-7142
WR450FR/FS/FT/FV	03-06	———	631-7141
YZ450FR/FS/FT/FV	03-06	———	631-7141
TT500C/D/E/F/G/H Offroad	76-81	631-203	631-7145
XT500C/D/E/F/G/H Dual Sport	76-81	631-203	631-7145
XT550J/K Dual Sport	82-83	631-203	631-7145
TT600K/L/N/S Offroad	83-86	631-203	631-7145
XT600L/LC-EG/EGC Dual Sport	84-95	631-203	631-7145

Oil Filter Bolt

Honda OEM 15420-333-000 Order No. 631-505

*This is a special order item.

Application: Honda: CB650 79-82, **CB650C Custom** 80-81, **CB650SC Nighhawk** 1982, **CB750F Super Sport** 77-78

PC Racing Oil Filters

FLO Oil Filters

FLO® STAINLESS STEEL REUSABLE "Spin On" Oil Filters

This should be the last oil filter you will ever buy! Made from laser cut, medical grade, 304 stainless steel micronic filter cloth. This filter provides 200% more filter area in many cases. Our stainless filter catches items down to 35 microns, which is about 3 times better than most good paper or brass filters. Unlike glued paper filters, the FLO Oil Filter pleat seam is welded and able to withstand up to 600 degrees.

- Cleanable and Reusable
- Superior Filtration – 35 microns!
- Proven Aerospace, NASCAR
- Indy and Formula 1 Technology
- High Flow Rate
- Easy Filter Element Inspection
- Unaffected by Water
- Heat or Pressure
- Environmentally Friendly
- Pays for itself

Arctic Cat

Application	Year	Flo No.	Order No.
371	1998	PCS2	945-141
375	2002	PCS2	945-141
400	98-07	PCS2	945-141
454	96-98	PCS2	945-141
493	1998	PCS2	945-141
500	99-09	PCS2	945-141
650 Twin	04-06	PCS1	945-140
650 H1	06-08	PCS2	945-141
Prowler 650	06-09	PCS2	945-141
700	06-09	PCS2	945-141
Prowler 700	08-09	PCS2	945-141

Honda

CB400F CB-1	88-90	PCS1	945-140
CB600F (599)	04-06	PCS1	945-140
CBR600	87-07	PCS1	945-140
VT600 Shadow	88-07	PCS1	945-140
CBR600RR	03-08	PCS1	945-140
NT650	88-91	PCS1	945-140
XL600V Transalp	89-90	PCS1	945-140
CB700 Nighthawk	91-03	PCS1	945-140
VF750C Magna	82-83	PCS1	945-140
VF750C Magna	1988	PCS1	945-140
VF750C Magna	94-03	PCS1	945-140
VFR750F	1986	PCS1	945-140
VFR750F	90-97	PCS1	945-140
VT750 Shadow	97-08	PCS1	945-140
PC800 Pacific Coast	88-90	PCS1	945-140
PC800 Pacific Coast	94-98	PCS1	945-140
VFR800F	98-07	PCS1	945-140
CB900F (919)	02-07	PCS1	945-140
CBR900RR	93-99	PCS1	945-140
CBR929RR	00-01	PCS1	945-140
CBR954	02-03	PCS1	945-140
CB1000 Custom	94-95	PCS1	945-140
CBR1000F	87-96	PCS1	945-140
CBR1000RR	04-08	PCS1	945-140
RVT1000R (RC51)	01-06	PCS1	945-140
VF1000 Interceptor	84-86	PCS1	945-140
CBR1100XX	97-03	PCS1	945-140

Honda

Application	Year	Flo No.	Order No.
ST1100	91-92	PCS1	945-140
VF1100 Magna	83-86	PCS1	945-140
VT1100 Shadow	89-07	PCS1	945-140
VTR1000F Super Hawk	96-06	PCS1	945-140
ST1300	03-08	PCS1	945-140
VTX1300	03-08	PCS1	945-140
GL1500 (G.W. Aspen, Inters.)	88-00	PCS1	945-140
GL1500 Valkyrie	97-03	PCS1	945-140
GL1800 Goldwing	01-08	PCS1	945-140
NRX1800 Rune	04-05	PCS1	945-140
VTX1800	02-08	PCS1	945-140

Kawasaki

KVF300 Prairie	99-02	PCS1	945-140
KVF360 Prairie	03-09	PCS1	945-140
KLF400 Bayou	97-01	PCS1	945-140
KVF400 Prairie	97-02	PCS1	945-140
EX500 Ninja	97-08	PCS1	945-140
EX600 Ninja R	06-08	PCS1	945-140
Mule 600 2x4	05-09	PCS1	945-140
ZX6	90-02	PCS1	945-140
ZX6R	95-08	PCS1	945-140
ZX6RR	03-08	PCS1	945-140
ZZR600	03-08	PCS1	945-140
Mule 610 4x4	05-09	PCS1	945-140
KVF650 Brute Force	05-09	PCS1	945-140
KVF650 Prairie	02-03	PCS1	945-140
W650 Retro	00-02	PCS1	945-140
KFX700	04-09	PCS1	945-140
KVF700 Prairie	04-06	PCS1	945-140
ZX7	89-99	PCS1	945-140
ZX7R	91-03	PCS1	945-140
ZX7RR	1996	PCS1	945-140
KVF750 Brute Force	05-09	PCS1	945-140
Teryx 750	08-09	PCS1	945-140
VN750 Vulcan	94-06	PCS1	945-140
Z750S	05-08	PCS1	945-140
ZX750 Ninja, 750L	91-02	PCS1	945-140
VN800 Vulcan	95-06	PCS1	945-140
VN900 Vulcan	06-08	PCS1	945-140
ZX9R Ninja	94-03	PCS1	945-140
Mule 1000	93-02	PCS1	945-140
ZX10R	04-07	PCS1	945-140
Z1000	03-08	PCS1	945-140
ZX12R	00-05	PCS1	945-140
ZX14R	06-08	PCS1	945-140
VN1500 Vulcan	87-08	PCS1	945-140
VN1600 Vulcan	03-08	PCS1	945-140
VN2000 Vulcan	04-08	PCS1	945-140
Mule 2010, 2020, 2030	93-02	PCS1	945-140
Mule 3000 3x4	01-08	PCS1	945-140
Mule 3010 4x4	01-08	PCS1	945-140
Mule 3010 Diesel 4x4	01-08	PCS1	945-140
Mule 4000, 4010	2009	PCS1	945-140

KTM

Duke/Adventure/SMC - LC4			
Spin on filter on front frame	99-08	PCS1	945-140

Polaris

Application	Year	Flo No.	Order No.
450 Super Utility	2000	PCS1	945-140
425 Ranger 4x2	01-04	PCS1	945-140
500 ATP	04-05	PCS1	945-140
500L Big Boss	98-00	PCS1	945-140
500 Magnum/RMK	99-02	PCS1	945-140
500 Ranger 4x2	07-08	PCS1	945-140
500 Ranger 4x4	01-08	PCS1	945-140
500 Ranger 6x6	99-05	PCS1	945-140
500 Scrambler	98-08	PCS1	945-140
500 Sportsman	96-08	PCS1	945-140
500 Sportsman 6x6	00-08	PCS1	945-140
500 X-Plorer	1997	PCS1	945-140
600 Twin	03-05	PCS1	945-140
MV7 700		PCS1	945-140
700 Ranger XP 4x4	06-08	PCS1	945-140
700 Ranger 6x6	06-08	PCS1	945-140
700 Sportsman	02-08	PCS1	945-140
800 Sportsman	02-08	PCS1	945-140
800 Ranger RZR	2008	PCS1	945-140

Suzuki

Boulevard S40	05-08	PCS2	945-141
Boulevard C50	05-08	PCS2	945-141
Boulevard C90	05-08	PCS2	945-141
Boulevard M50	05-08	PCS2	945-141
Boulevard S83	05-08	PCS2	945-141
M95	2005	PCS2	945-141
M109 R&T	06-08	PCS2	945-141
LTA400 Eiger	02-07	PCS2	945-141
LTA400 King Quad	08-09	PCS2	945-141
LTA450 King Quad	07-09	PCS2	945-141
LTA500F Quadmaster	00-01	PCS2	945-141
LTA500F Vision	02-07	PCS2	945-141
LT-F500F Quadrunner	98-02	PCS2	945-141
GSF600S Bandit	96-03	PCS2	945-141
GSX600F Katana	88-06	PCS2	945-141
GSXR600	92-93	PCS2	945-141
GSXR600	97-08	PCS2	945-141
RF600R	94-96	PCS2	945-141
620 QUV	05-06	PCS1	945-140
DL650 V-Strom	04-08	PCS2	945-141
GSF650 Bandit	05-08	PCS2	945-141
SV650	99-08	PCS2	945-141
SV650S	99-08	PCS2	945-141
LTA700X King Quad	98-07	PCS2	945-141
LTZ700F Twin Peaks	98-05	PCS1	945-140
VS700 Intruder	1987	PCS2	945-141
LTA750 King Quad	08-09	PCS2	945-141
GSX750F Katana	89-06	PCS2	945-141
GSXR750	86-08	PCS2	945-141
VS750 Intuder	88-91	PCS2	945-141
VL800 Volusia	01-04	PCS2	945-141
VS800 Intruder	92-04	PCS2	945-141
VX800	90-93	PCS2	945-141
VZ800 Marauder	97-02	PCS2	945-141
RF900R	94-97	PCS2	945-141
DL1000 V-Strom	02-08	PCS2	945-141
GSXR1000	01-08	PCS2	945-141
TL1000S	97-01	PCS2	945-141
GSX1100F Katana	88-93	PCS2	945-141
SV1000	04-08	PCS2	945-141
SV1000S	04-08	PCS2	945-141
GSXR1100	86-98	PCS2	945-141
GSF1200 Bandit	97-05	PCS2	945-141
GSF1250 Bandit	07-08	PCS2	945-141
GSXR1300 Hayabusa	99-08	PCS2	945-141
GV1400 Cavalcade	87-88	PCS2	945-141
VS1400 Intruder	87-04	PCS2	945-141
VL1500 Intruder LC	98-04	PCS2	945-141
VZ1600 Marauder	2004	PCS1	945-140

Triumph

Speed 4 599	02-06	PCS1	945-140
Daytona 600	2004	PCS1	945-140
TT600	00-03	PCS1	945-140
Daytona 650	2004	PCS1	945-140

Triumph

Application	Year	Flo No.	Order No.
Daytona 675	06-08	PCS1	945-140
America 790	03-06	PCS1	945-140
Bonnieville 790	01-06	PCS1	945-140
Speedmaster 790	03-06	PCS1	945-140
America 865	07-08	PCS1	945-140
Bonnieville 865	05-08	PCS1	945-140
Speedmaster 865	07-08	PCS1	945-140
Scrambler	06-08	PCS1	945-140
Speed Triple 885	97-98	PCS1	945-140
Tiger 885	2000	PCS1	945-140
Thruxton 900	04-08	PCS1	945-140
Daytona 955	97-06	PCS1	945-140
Speed Triple 955	99-06	PCS1	945-140
Sprint RS 955	00-03	PCS1	945-140
Sprint ST 955	99-06	PCS1	945-140
Tiger 955	01-06	PCS1	945-140
Speed Triple 1050	07-08	PCS1	945-140
Sprint ST 1050	07-08	PCS1	945-140
Tiger 1050	07-08	PCS1	945-140
Rocket III	04-09	PCS1	945-140

Victory

Cruiser	99-05	PCS1	945-140
Hammer	05-08	PCS1	945-140
Kingpin	04-08	PCS1	945-140
Touring Criuser	02-07	PCS1	945-140
Vegas	03-08	PCS1	945-140

Yamaha

YFM350 Bruin/ Grizzly	04-09	PCS1	945-140
YFM400 Kodiak/ Grizzly	00-07	PCS1	945-140
YXR450 Rhino (Side x Side)	06-09	PCS1	945-140
YFM450 Kodiak/ Grizzly	02-07	PCS1	945-140
YFM450 Wolverine	06-08	PCS1	945-140
FZ6	05-08	PCS1	945-140
FZR600	91-01	PCS1	945-140
XJ600 Seca II	92-98	PCS1	945-140
YZF600R	95-07	PCS1	945-140
YZF-R6	99-09	PCS1	945-140
YXR660 Rhino (Side x Side)	04-07	PCS1	945-140
YFM660 Grizzly	02-07	PCS1	945-140
YFM660 Raptor	01-05	PCS1	945-140
YXR700 Rhino	08-09	PCS1	945-140
YFM700 Grizzly	07-09	PCS1	945-140
YZF750	94-97	PCS1	945-140
FZ1	01-08	PCS1	945-140
FZR1000	91-95	PCS1	945-140
GTS1000	93-94	PCS1	945-140
YZF1000	97-98	PCS1	945-140
YZF R1	98-08	PCS1	945-140
VMX12 V-Max	96-08	PCS1	945-140
FJR1300	03-08	PCS1	945-140
XVZ13 Venture / Royal Star	96-07	PCS1	945-140
XV1600 Road Star	99-03	PCS1	945-140
XV1700 Road Star	04-07	PCS1	945-140
XV1900 Roadliner	06-07	PCS1	945-140
XV1900 Stratoliner	06-07	PCS1	945-140

PC Racing Oil Filters

FLO Oil Filters

FLO® STAINLESS STEEL 'DROP IN' OIL FILTERS

This should be the last oil filter you will ever buy! Made from laser cut, medical grade, 304 stainless steel micronic filter cloth, this filter provides 200% more filter area in many cases. Our stainless filter catches items down to 35 microns, which is about 3 times better than most good paper or brass filters. Unlike glued paper filters, the FLO Oil Filter pleat seam is welded and able to withstand up to 600 degrees.

Honda

Application	Year	Flo No.	Order No.
CRF150 R	07-11	PC116	945-151
CRF250 R/X	04-11	PC116	945-151
CRF450 R/X	02-11	PC116	945-151
TRX250/300/350/400/450 Foreman	85-11	PC112	945-150
TRX450 R	04-11	PC116	945-151
TRX700XX	08-11	PC112	945-150
XR250/350/400/500/600/650	84-11	PC112	945-150

Husaberg

4-Stoke Models (Front)*	all	PC155	945-154
4-Stroke Models (Rear)**	all	PC157	945-155

Note: *Tall Filter, ** Short Filter

Kawasaki

KLX110	02-11	PC112	945-150
KLX140	08-11	PC112	945-150
KLX250/300	94-11	PC112	945-150
KXF250	04-11	PC207	945-157
KFX400 (ATV)	05-11	PC139	945-152
KLX400	03-04	PC139	945-152
KFX450 (ATV)	08-11	PC112	945-150
KLX450	08-11	PC112	945-150
KX450F	06-11	PC112	945-150

KTM

250/400/450/520/525 EXC-F (Front)*	00-07	PC155	945-154
250/400/450/520/525 EXC-F (Rear)**	00-07	PC157	945-155
250 EXC-F (single filter engine)	2009	PC155	945-154
250 SX-F (single filter engine)	05-10	PC155	945-154
250 XC-F (single filter engine)	2009	PC155	945-154
250/400/450/525 XC-F (Front)*	00-07	PC155	945-154
250/400/450/525 XC-F (Rear)**	00-07	PC157	945-155
250/400/450/520/525 SX-F (Front)*	00-05	PC155	945-154
250/400/450/520/525 SX-F (Rear)**	00-05	PC157	945-155
450/525 SX-F (Front)*	2006	PC155	945-154
450/525 SX-F (Rear)**	2006	PC157	945-155
450 SX	07-09	PC167	945-156
450/525 XC (ATV) (Front)*	08-09	PC155	945-154
450/525 XC (ATV) (Rear)**	08-09	PC157	945-155
450 XC/XCR/EXC/SMR	08-09	PC167	945-156
505 SX/XC	08-09	PC167	945-156
530 EXC/XCR	08-09	PC167	945-156
540/620/625/640/LC4	92-07	PC155	945-154

Note: *Tall Filter, ** Short Filter

Polaris

Application	Year	Flo No.	Order No.
500 Predator	03-09	PC112	945-150
450/525 Outlaw (Front)*	08-10	PC155	945-154
450/525 Outlaw (Rear)**	08-09	PC157	945-155

Note: *Tall Filter, ** Short Filter

Suzuki

RM-Z 250	04-11	PC207	945-157
DR-Z 400	00-11	PC139	945-152
LT-Z 400 Quadsport	03-11	PC139	945-152
LT-R 450 Quadracer	06-11	PC139	945-152
RM-Z 450	05-11	PC207	945-157

Yamaha

YFM250 Raptor 250	08-11	PC141	945-153
TTR250	99-11	PC141	945-153
XV250 V-Star	08-11	PC145	945-158
XV250 Virago	04-07	PC145	945-158
YZ/WR250/400/426/450F	98-11	PC141	945-153
YMF350	86-11	PC141	945-153
YFB450 Kodiak	02-09	PC141	945-153
YFM400 (all)	93-11	PC141	945-153
YFZ450	04-11	PC141	945-153
YFZ450X	10-11	PC141	945-153
650 Drag Star	98-11	PC145	945-158
650 V-Star	98-11	PC145	945-158
Raptor 700	06-11	PC145	945-158
1100 V-Star	99-09	PC145	945-158
1100 Drag Star	02-09	PC145	945-158

Red Line High Performance Motorcycle Oils

Description	Order No.
10W30	900-880
10W40	900-881
20W50	900-883
20W60HD	900-805

Clutch Plates, Clutch Springs, & Clutch Cover Gasket

Sudco Clutch Plates & Clutch Springs

SUDCO friction plates, steel drive plates and stiffer clutch spring sets are sourced from the OEM mfgs. in Japan. Highest quality clutch components available. Clutch plates and clutch cover gaskets are sold each. Clutch springs sold in sets. Order per quantity needed.

Honda Street

Model	Year	Friction Plate each	Drive(Metal) Plate each	Spring Set	Gasket each
MB5-50	1982	12-1019 (3)	12-1005 (2)	614-131 (4)	—
NSF50	1990	12-1019 (3)	13-1005 (2)	614-131 (4)	—
NSR50	2004	12-1019 (4)	13-1005 (3)	614-131 (4)	—
C70 Passport	80-83	12-1011 (2)	13-1001 (1)	614-115 (4)	—
		12-1077 (1)	13-1020 (1)	—	—
CL70K0/K1-K3 Scrambler	69-73	12-1012 (2)	— (2)	614-115 (4)	—
CT70 Trail 70	76-82	12-1011 (2)	13-1001 (1)	614-115 (4)	—
		12-1077 (1)	13-1020 (1)	—	—
XL75	77-79	12-1019 (5)	13-1005 (4)	614-138 (4)	643-1026
XL80S	80-85	12-1019 (3)	13-1005 (2)	614-129 (4)	643-1026
ST90/K1/K2 Trail Sport 90	73-75	12-1017 (3)	— (4)	— (4)	—
CB100K0/K1/K2 Super Sport	70-72	12-1019 (5)	13-1005 (4)	614-101 (4)	—
CL100K0/K1/K2 Scrambler	70-72	12-1019 (5)	13-1005 (4)	614-101 (4)	—
CL100S/S2/S3 Scrambler	71-73	12-1019 (5)	13-1005 (4)	614-101 (4)	—
SL100K0-K3 Motosport	70-73	12-1019 (5)	13-1005 (4)	614-101 (4)	—
XL100K0/K1	74-75	12-1019 (5)	13-1005 (4)	614-101 (4)	—
XL100	76-78	12-1019 (5)	13-1005 (4)	614-101 (4)	—
XL100S	79-80	12-1019 (4)	13-1005 (3)	614-138 (4)	643-1026
XL100S	81-85	12-1019 (4)	13-1005 (3)	614-129 (4)	643-1026
CT110 Trail 110	80-84	12-1017 (3)	—	614-132 (4)	643-1023
CT110 Trail 110	1986	12-1017 (3)	—	614-132 (4)	643-1023
CB125S/S1/S2	73-75	12-1019 (5)	13-1005 (4)	614-101 (4)	—
CB125S	1976	12-1019 (5)	13-1005 (4)	614-101 (4)	—
CB125S	78-80	12-1019 (5)	13-1005 (4)	614-101 (4)	—
CB125S	81-82	12-1019 (5)	13-1005 (4)	614-101 (4)	643-1016
CB125S	84-85	12-1019 (5)	13-1005 (4)	614-101 (4)	—
CB125TT	1990	12-1019 (4)	13-1005 (4)	614-134 (4)	—
		12-1068 (1)	—	—	—
CL125S/S1 Scrambler 125	73-74	12-1019 (5)	13-1005 (4)	— (4)	—
CT125 Trail 125	1977	12-1019 (5)	13-1005 (4)	614-101 (4)	—
NX125	88-90	12-1019 (4)	13-1005 (4)	614-109 (4)	—
		12-1068 (1)	—	— (4)	—
SL125K0/K1/K2 Motosport	71-73	12-1019 (5)	13-1005 (4)	— (4)	—
XL125K0/K1	74-75	12-1019 (5)	13-1005 (4)	— (4)	—
XL125	76-78	12-1019 (5)	13-1005 (4)	614-101 (4)	—
XL125S	79-82	12-1019 (5)	13-1005 (4)	614-137 (4)	643-1016
XL125S	84-85	12-1019 (5)	13-1005 (4)	614-137 (4)	643-1016
CA175 Touring 175	68-69	12-1034 (5)	13-1046 (4)	— (4)	—
CB175K3-K7 Super Sport	69-73	12-1034 (5)	13-1046 (4)	— (4	—
CL175K0/K3-K7 Scrambler	68-73	12-1034 (5)	13-1046 (4)	— (4)	—
CM185T Twinstar	78-79	12-1019 (5)	13-1005 (4)	— (4)	—
XL185S	79-83	12-1019 (5)	13-1005 (4)	614-101 (4)	643-1016
CB200	1974	12-1034 (5)	13-1046 (4)	— (4)	—
CB200T	75-76	12-1034 (5)	13-1046 (4)	— (4)	—
CL200 Scrambler	1974	12-1034 (5)	13-1046 (4)	— (4)	—
CM200T Twinstar	80-82	12-1019 (5)	13-1046 (4)	614-150 (4)	—
TLR200 Reflex	86-87	12-1019 (5)	13-1005 (4)	614-154 (4)	643-1016
TR200 Fatcat	1986	12-1019 (5)	13-1006 (4)	614-148 (4)	643-1059
XL200R	83-84	12-1019 (5)	13-1005 (4)	614-105 (4)	643-1016
CB250 Nighthawk	91-06	12-1019 (6)	13-1006 (6)	614-150 (4)	—
CM250C Custom	82-83	12-1019 (6)	13-1005 (6)	614-150 (4)	—
CMX250C Rebel	85-87	12-1019 (6)	13-1005 (6)	614-150 (4)	—
CMX250C Rebel	96-97	12-1019 (6)	13-1006 (6)	614-150 (4)	—
CMX250C Rebel	99-06	12-1019 (6)	13-1006 (6)	614-150 (4)	—
CMX250C2 Rebel	99-00	12-1019 (6)	13-1006 (6)	614-150 (4)	—
CMX250CD Rebel 250 L	1986	12-1019 (6)	13-1005 (6)	614-150 (4)	—
MT250/K1 Elsinore	74-75	12-1061/3 (7)	13-1018 (6)	—	—

Honda Street

Model	Year	Friction Plate each	Drive(Metal) Plate each	Spring Set	Gasket each
NX250	88-90	12-1042/2 (6)	13-1011 (5)	614-152 (4)	—
XL250/K1/K2 Motosport	72-75	12-1061/3 (7)	13-1025 (6)	614-101 (4)	—
XL250	1976	12-1061/3 (7)	13-1029 (6)	614-101 (4)	—
XL250S	78-80	12-1042 (4)	13-1046 (3)	614-135 (4)	643-1009
XL250S	1981	12-1042 (4)	13-1046 (4)	614-135 (4)	—
		12-1034 (1)	—	—	—
XL250R	82-83	12-1042 (4)	13-1046 (4)	614-135 (4)	—
		12-1034 (1)	—	—	—
XL250R	84-87	12-1042/2 (5)	13-1011 (5)	614-127 (4)	—
XR250L	91-96	12-1042/2 (6)	13-1011 (5)	614-127 (4)	—
VTR250 Interceptor	88-90	12-1019 (6)	13-1030 (6)	614-152 (4)	—
		12-1068 (1)	—	—	—
CB350F/F1 Super Sport	72-74	12-1042 (6)	13-1046 (6)	614-101 (4)	643-1014
		12-1034 (1)	13-1036 (1)	—	—
CB350G Super Sport	1973	12-1061/3 (8)	— (8)	614-102 (4)	643-1013
CB350K0-K4 Super Sport	68-73	12-1061/3 (8)	— (8)	614-102 (4)	643-1013
CL350K0-K5 Scrambler	68-73	12-1061/3 (8)	— (8)	614-102 (4)	643-1013
SL350/K1/K2 Moto Sport	70-73	12-1061/3 (8)	— (8)	614-102 (4)	643-1013
XL350/K1	74-75	12-1061/3 (7)	13-1025 (6)	(4)	—
XL350	76-78	12-1061/3 (7)	13-1025 (6)	(4)	—
XL350R	84-85	12-1042/2 (5)	13-1011 (5)	614-146 (4)	—
		12-1034 (1)	—	—	—
CB360/G	1974	12-1061/3 (8)	—(8)	614-102 (4)	—
CB360T	75-76	12-1061/3 (8)	—(8)	614-102 (4)	—
CJ360T	76-77	12-1061/3 (8)	—(8)	614-102 (4)	—
CB400F CB1	89-90	12-1059 (5)	13-1017 (4)	614-110 (4)	—
		12-1061/2 (1)	—(1)	—	—
CB400F Super Sport	75-77	12-1042 (6)	13-1046 (6)	614-101 (4)	643-1008
		12-1034 (1)	13-1036 (1)	—	—
CB400TI Hawk	78-79	12-1042 (6)	13-1047 (6)	614-110 (4)	—
		12-1034 (1)	—	—	—
CB400TII Hawk	78-79	12-1042 (6)	13-1047 (6)	614-110 (4)	—
		12-1034 (1)	—	—	—
CB400T Hawk	80-81	12-1042 (6)	13-1047 (6)	614-110 (4)	—
		12-1034 (1)	—	—	—
CM400C Custom	1981	12-1042 (6)	13-1047 (6)	614-110 (4)	—
		12-1034 (1)	—	—	—
CM400E	80-81	12-1042 (6)	13-1047 (6)	614-110 (4)	—
		12-1034 (1)	—	—	—
CM400T	79-81	12-1042 (6)	13-1047 (6)	614-110 (4)	—
		12-1034 (1)	—	—	—
CB450K1-K7 Super Sport	68-74	12-1061/2 (7)	13-1033 (6)	— (4)	—
		—	—(1)	—	—
CB450T Hawk	1982	12-1042 (6)	13-1047 (6)	614-110 (4)	—
		12-1034 (1)	—	—	—
CB450SC Nighthawk	82-83	12-1042 (6)	13-1047 (6)	614-107 (4)	—
		12-1034 (1)	—	—	—
CB450SC Nighthawk	85-86	12-1042 (6)	13-1047 (6)	614-107 (4)	—
		12-1034 (1)	—	—	—
CL450K1-K6 Scrambler	68-74	12-1061/2 (7)	13-1033 (6)	(4)	—
			—(1)	—	—
CM450C Custom	1982	12-1042 (6)	13-1047 (6)	614-110 (4)	—
		12-1034 (1)	—	—	—
CM450E	82-83	12-1042 (6)	13-1047 (6)	614-110 (4)	—
		12-1034 (1)	—	—	—
CMX450C Rebel	86-87	12-1042 (6)	13-1047 (6)	(4)	—
		12-1034 (1)	—(1)	—	—

Clutch Plates, Clutch Springs, & Clutch Cover Gasket

Honda Street

Model	Year	Friction Plate each	Drive(Metal) Plate each	Spring Set	Gasket each
B500T	75-76	12-1061/2 (7)	13-1033 (6)	—— (4)	——
CB500/K1/K2	71-73	12-1059 (7)	—— (7)	614-105 (4)	——
CX500	78-79	12-1061/3 (6)	13-1025 (5)	614-109 (4)	——
		12-1033 (1)	13-1039 (1)	——	——
CX500C Custom	79-82	12-1061/3 (6)	13-1025 (5)	614-109 (4)	——
		12-1033 (1)	13-1039 (1)	——	——
CX500D Deluxe	79-81	12-1061/3 (6)	13-1025 (5)	614-109 (4)	——
		12-1033 (1)	13-1039 (1)	——	——
FT500 Ascot	82-83	12-1042 (6)	13-1046 (7)	614-124 (4)	643-1041
		12-1034 (1)	——	——	——
GB500	89-90	12-1054 (6)	13-1015 (6)	614-125 (4)	——
		12-1088 (1)	——	——	——
GL500 Silverwing	81-82	12-1061/3 (6)	13-1025 (5)	614-109 (4)	——
		12-1033 (1)	13-1039 (1)	——	——
GL500I Silverwing Interstate	81-82	12-1061/3 (6)	13-1025 (5)	614-109 (4)	——
		12-1033 (1)	13-1039 (1)	——	——
VF500C Magna	84-85	12-1019 (8)	13-1030 (8)	614-148 (4)	643-1049
		12-1068 (1)	——	——	——
VF500F Interceptor	84-86	12-1019 (8)	13-1030 (8)	614-148 (4)	643-1049
		12-1068 (1)	——	——	——
VT500C Shadow	83-84	12-1042 (5)	13-1047 (5)	614-125 (4)	——
		12-1034 (1)	——	——	——
VT500C Shadow	85-86	12-1042 (5)	13-1047 (5)	—— (4)	——
		12-1034 (1)	——	——	——
VT500FT Ascot	83-84	12-1042 (5)	13-1047 (5)	614-125 (4)	——
		12-1034 (1)	——	——	——
XL500R Dual Sport	1982	12-1042 (6)	13-1014 (6)	614-107 (4)	——
		12-1034 (1)	——	——	——
XL500S Dual Sport	79-81	12-1042 (6)	13-1014 (6)	614-107 (4)	643-1009
		12-1034 (1)	——	——	——
CB550K0/K1	74-75	12-1061/3 (7)	13-1017 (5)	614-105 (4)	——
CB550/K	76-78	12-1061/3 (6)	13-1017 (5)	614-105 (4)	——
		12-1070 (1)	——	——	——
CB550F Super Sport	75-77	12-1061/3 (6)	13-1017 (6)	614-105 (4)	——
		12-1070 (1)	——	——	——
CB550SC Nighthawk	1983	12-1059 (6)	13-1017 (5)	614-142 (5)	——
CB600F (519)	2004	12-1042/2 (7)	13-1031 (7)	—— (5)	——
		12-1034 (1)	——	——	——
CB600F (519)	2006	12-1042/2 (7)	13-1031 (7)	—— (5)	——
		12-1034 (1)	——	——	——
CBR600F Hurricane	87-90	12-1059 (5)	13-1017 (5)	614-110 (4)	643-1070
		12-1061/2 (1)	——	——	——
CBR600F2 Hurricane	91-94	12-1042/2 (8)	13-1012 (8)	—— (4)	643-1083
		12-1034 (1)	——	——	——
CBR600F3 Hurricane	95-98	12-1042/2 (8)	13-1012 (8)	—— (4)	643-1083
		12-1034 (1)	——	——	——
CBR600F4 Hurricane	99-00	12-1042/2 (7)	13-1012 (6)	—— (5)	——
CBR600RR	03-06	12-1042/2 (7)	13-1031 (7)	—— (5)	——
		12-1034 (1)	——	——	——
CBR600SE	1998	12-1042/2 (8)	13-1012 (8)	—— (4)	643-1083
		12-1034 (1)	——	——	——
CBR600SJR Replica	1996	12-1042/2 (8)	13-1012 (8)	—— (4)	643-1083
		12-1034 (1)	——	——	——
VT600C Shadow	1988	12-1042/2 (6)	13-1047 (6)	—— (4)	643-1071
		12-1034 (1)	——	——	——
VT600C Shadow	1989	12-1042 (7)	13-1046 (7)	—— (4)	643-1071
		12-1034 (1)	——	——	——
VT600C Shadow	91-97	12-1042/2 (6)	13-1013 (6)	—— (4)	643-1071
		12-1034 (1)	——	——	——
VT600C Shadow	99-06	12-1042/2 (6)	13-1013 (6)	—— (4)	643-1071
		12-1034 (1)	——	——	——
VT600CD Shadow Deluxe	93-07	12-1042/2 (6)	13-1013 (6)	—— (4)	643-1071
		12-1034 (1)	——	——	——
VT600CD2 Shadow Deluxe	99-00	12-1042/2 (6)	13-1013 (6)	—— (4)	643-1071
		12-1034 (1)	——	——	——
XL600R	83-87	12-1054 (7)	13-1015 (6)	614-126 (4)	643-1028
XL600V Transalp	89-90	12-1042/2 (6)	13-1013 (6)	—— (4)	——
		12-1034 (1)	——	——	——
CB650	79-82	12-1061/3 (7)	13-1025 (7)	614-105 (4)	——
		12-1070 (1)	——	——	——

Honda Street

Model	Year	Friction Plate each	Drive(Metal) Plate each	Spring Set	Gasket each
CB650C Custom	80-81	12-1061/3 (7)	13-1025 (7)	614-105 (4)	——
		12-1070 (1)	——	——	——
CB650SC Nighthawk	1982	12-1061/3 (7)	13-1025 (7)	614-105 (4)	——
		12-1070 (1)	——	——	——
CB650SC Nighthawk	83-85	12-1059 (6)	13-1017 (5)	614-142 (5)	——
CX650C	1983	12-1067 (7)	13-1025 (6)	—— (4)	——
		12-1074 (1)	13-1039 (1)	——	——
CX650T Turbo	1983	12-1067 (7)	13-1027 (6)	614-144 (6)	——
		12-1074 (1)	13-1041 (1)	——	——
GL650 Silverwing	1983	12-1061/3 (7)	13-1025 (6)	—— (4)	——
		12-1070 (1)	13-1039 (1)	——	——
GL650I Silverwing Interstate	1983	12-1061/3 (7)	13-1025 (6)	—— (4)	——
		12-1070 (1)	13-1039 (1)	——	——
NT650 Hawk GT	88-89	12-1042 (7)	13-1046 (7)	—— (4)	643-1071
		12-1034 (1)	——	——	——
NT650 Hawk GT	90-91	12-1042 (7)	13-1035 (7)	—— (4)	643-1071
		12-1034 (1)	——	——	——
NX650	88-89	12-1054 (7)	13-1015 (6)	614-151 (4)	643-1028
XR650L Dual Sport	93-06	12-1061/4 (7)	13-1015 (6)	614-151 (4)	643-1028
CB700SC Nighthawk	84-86	12-1061 (6)	13-1023 (5)	614-142 (5)	643-1050
VF700C Magna	84-87	12-1061 (6)	13-1023 (5)	614-142 (5)	643-1021
VF700F Interceptor	84-85	12-1054 (7)	13-1023 (6)	614-142 (5)	643-1021
VF700S Sabre	84-85	12-1061 (6)	13-1023 (5)	614-142 (5)	643-1021
VFR700F Interceptor	1986	12-1042/2 (8)	13-1012 (8)	614-159 (5)	643-1064
		12-1034 (1)	——	——	——
VFR700F2 Interceptor	86-87	12-1042/2 (8)	13-1012 (8)	614-159 (5)	643-1064
		12-1034 (1)	——	——	——
VT700C Shadow	84-86	12-1061 (6)	13-1023 (5)	——	643-1040(I)
VT700C Shadow	1987	12-1061 (6)	13-1023 (5)	614-142 (5)	643-1040(I)
CB750 Nighthawk	91-93	12-1059 (6)	13-1017 (5)	614-110 (4)	643-1050
		12-1061/2 (1)	—— (1)	——	——
CB750 Nighthawk	95-03	12-1059 (6)	13-1017 (5)	614-110 (4)	643-1050
		12-1061/2 (1)	—— (1)	——	——
CB750C Custom	80-82	12-1045 (7)	13-1029 (6)	614-145 (6)	643-1002
		12-1073 (1)	13-1040 (1)	——	——
CB750F Super Sport	75-76	12-1033 (6)	13-1023 (6)	614-102 (4)	——
		12-1070 (1)	——	——	——
CB750F Super Sport	77-78	12-1033 (6)	13-1023 (6)	614-104 (4)	——
		12-1070 (1)	——	——	——
CB750F Super Sport	79-82	12-1045 (7)	13-1029 (6)	614-145 (6)	643-1002
		12-1073 (1)	13-1040 (1)	——	——
CB750K	79-82	12-1045 (7)	13-1029 (6)	614-145 (6)	643-1002
		12-1073 (1)	13-1040(1)	——	——
CB750L LTD	1979	12-1045 (7)	13-1029 (6)	614-145 (6)	643-1002
		12-1073 (1)	13-1040 (1)	——	——
CB750SC Nighthawk	82-83	12-1045 (7)	13-1029 (6)	614-145 (6)	643-1002
		12-1073 (1)	13-1040 (1)	——	——
VF750C V45 Magna	82-83	12-1061 (6)	13-1023 (5)	—— (5)	643-1021
VF750C V45 Magna	1988	12-1061 (6)	13-1023 (5)	—— (5)	643-1021
VF750C Magna	94-03	12-1042/2 (8)	13-1012 (8)	—— (5)	643-1064
		12-1034 (1)	——	——	——
VF750C2 Magna Deluxe	97-00	12-1042/2 (8)	13-1012 (8)	—— (5)	643-1064
		12-1034 (1)	——	——	——
VF750CD Magna Deluxe	95-96	12-1042/2 (8	13-1012 (8)	—— (5)	643-1064
		12-1034 (1)	——	——	——
VF750F V45 Interceptor	83-84	12-1061 (7)	13-1023 (6)	——	643-1021
VF750S V45 Sabre	82-83	12-1061 (6)	13-1023 (5)	——	643-1021
VFR750F Interceptor	1986	12-1042/2 (8)	13-1012 (8)	—— (5)	——
		12-1034 (1)	——	——	——
VFR750F	90-97	12-1042/2 (8)	13-1012 (8)	—— (5)	——
		12-1034 (1)	——	——	——
VT750C Shadow	1983	12-1061 (6)	13-1023 (5)	——	643-1040
VT750C Shadow	98-00	12-1042 (7)	13-1035 (7)	—— (4)	——
		12-1034 (1)	——	——	——
VT750C Shadow Aero	04-06	12-1042 (7)	13-1035 (7)	——	——
		12-1034 (1)	——	——	——
VT750CA Shadow Aero	04-06	12-1042 (7)	13-1035(7)	——	——
		12-1034 (1)	——	——	——
VT750CD Shadow Deluxe	98-01	12-1042 (7)	13-1035 (7)	—— (4)	643-1071
		12-1034 (1)	——	——	——

Clutch Plates, Clutch Springs, & Clutch Cover Gasket

Honda Street

Model	Year	Friction Plate each	Drive(Metal) Plate each	Spring Set	Gasket each
VT750CD2 Shadow Deluxe	98-01	12-1042 (7)	13-1035 (7)	— (4)	643-1071
		12-1034 (1)	—	—	—
VT750CDA Shadow ACE	02-03	12-1042 (7)	13-1035 (7)	— (4)	—
		12-1034 (1)	—	—	—
VT750CDB Shadow ACE	02-03	12-1042 (7)	13-1035 (7)	— (4)	—
		12-1034 (1)	—	—	—
VT750CDC Shadow ACE	02-03	12-1042 (7)	13-1035 (7)	— (4)	—
		12-1034 (1)	—	—	—
VT750CDD Shadow ACE	02-03	12-1042 (7)	13-1035 (7)	— (4)	—
		12-1034 (1)	—	—	—
PC800 Pacific Coast	89-90	12-1061 (7)	13-1036 (6)	— (5)	643-1040
PC800 Pacific Coast	94-98	12-1061 (7)	13-1036 (6)	— (5)	643-1040
VFR800 Interceptor	02-06	12-1042/2 (7)	13-1031 (7)	— (5)	—
		12-1034 (1)	—	—	—
VFR800A Interceptor (ABS)	02-06	12-1042/2 (7)	13-1031 (7)	— (5)	—
		12-1034 (1)	—	—	—
VFR800FI Interceptor	98-99	12-1042/2 (8)	13-1012 (8)	— (5)	—
		12-1034 (1)	—	—	—
VFR800FI Interceptor	00-01	12-1042/2 (8)	13-1031 (7)	— (5)	—
VT800C Shadow	1988	12-1061 (6)	13-1023 (5)	614-155 (5)	643-1040
CB900C Custom	80-82	12-1045 (7)	13-1029 (6)	614-111 (6)	643-1002
		12-1073 (1)	13-1040 (1)	—	—
CB900F Super Sport	81-82	12-1045 (7)	13-1029 (6)	614-111 (6)	643-1002
		12-1073 (1)	13-1040 (1)	—	—
CB900F (919)	02-03	12-1042/2 (7)	13-1031 (7)	— (5)	643-1083
		12-1034 (1)	—	—	—
CBR900RR	93-95	12-1042/2 (8)	13-1038 (8)	— (5)	643-1083
		12-1034 (1)	—	—	—
CBR900RR	96-97	12-1042 (9)	13-1031 (9)	— (5)	643-1083
		12-1034 (1)	—	—	—
CBR900RR	98-99	12-1042/2 (7)	13-1031(7)	— (5)	643-1083
		12-1034 (1)	—	—	—
CBR929RE	2001	12-1042/2 (8)	13-1038 (8)	— (5)	—
		12-1034 (1)	—	—	—
CBR929RR	00-01	12-1042/2 (8)	13-1038 (8)	— (5)	—
		12-1034 (1)	—	—	—
CBR954RR	02-03	12-1042/2 (8)	13-1038 (8)	— (5)	—
		12-1034 (1)	—	—	—
CB1000	94-95	12-1061 (8)	13--1017(8)	— (5)	—
		12-1061/2 (1)	—	—	—
CB1000C Custom	1983	12-1045 (7)	13-1029 (6)	614-141 (6)	643-1002
		12-1073 (1)	—	—	—
CBR1000F Hurricane	87-88	12-1061 (8)	13-1017 (8)	— (5)	643-1077
		12-1061/2 (1)	—	—	—
CBR1000F Hurricane	90-91	12-1061 (8)	13-1017 (8)	— (5)	643-1077
		12-1061/2 (1)	—	—	—
CBR1000F Hurricane	93-95	12-1061 (8)	13-1017 (8)	— (5)	—
		12-1061/2 (1)	—	—	—
CBR1000RR	04-06	12-1059 (6)	13-1050 (6)	— (5)	—
		12-1061 (2)	— (1)	—	—
CBR1000RR1	2005	12-1059 (6)	13-1050 (6)	— (5)	—
		12-1061 (2)	— (1)	—	—
GL1000 Goldwing	75-79	12-1070 (7)	13-1023 (6)	614-144 (6)	643-1039
		12-1033 (1)	13-1027 (1)	—	—
GL1000L Goldwing LTD	1976	12-1070 (7)	13-1023 (6)	614-144 (6)	643-1039
		12-1033 (1)	13-1027 (1)	—	—
RVT1000R (RC51)	00-01	— (7)	13-1032 (6)	— (6)	—
RVT1000R (RC51)	02-06	— (6)	13-1032 (6)	— (6)	—
		— (1)	—	—	—
VF1000F Interceptor	1984	12-1061 (9)	13-1023 (8)	—	643-1021
VF1000R	85-86	12-1061 (9)	13-1023 (8)	—	643-1021
VTR1000 Super Hawk	98-05	12-1061 (10)	13-1017 (9)	— (5)	—
ST1100	91-02	12-1061 (8)	13-1017 (9)	614-155 (5)	643-1090
		12-1061/2 (2)	—	—	—
ST1100A (ABS)	92-02	12-1061 (8)	13-1017 (9)	614-155 (5)	643-1090
		12-1061/2 (2)	—	—	—
GL1200A Aspencade	84-85	12-1067 (9)	13-1027 (7)	—	643-1066
		—	13-1042 (1)	—	—
GL1200A Aspencade	86-87	12-1079 (9)	13-1027 (7)	—	643-1066
		—	13-1043 (1)	—	—

Honda Street

Model	Year	Friction Plate each	Drive(Metal) Plate each	Spring Set	Gasket each
GL1200I Interstate	84-85	12-1067 (9)	13-1027 (7)	—	643-1066
		—	13-1042 (1)	—	—
GL1200I Interstate	86-87	12-1079 (9)	13-1042 (7)	—	643-1066
		—	13-1043 (1)	—	—
GL1200L Goldwing LTD	1985	12-1067 (9)	13-1027 (7)	—	643-1066
		—	13-1042 (1)	—	—
GL1200SEi Goldwing	1986	12-1079 (9)	13-1027 (7)	—	643-1066
		—	13-1043 (1)	—	—
GL1500 Goldwing	88-89	12-1045 (9)	13-1034 (8)	—	643-1081
		12-1073 (1)	13-1044 (1)	—	—
GL1500 Goldwing	1990	12-1045 (7)	13-1034 (8)	—	643-1081
		12-1073 (1)	13-1044 (1)	—	—
		— (2)	—	—	—
GL1500A Aspencade	91-96	12-1045 (7)	13-1034 (8)	—	643-1081
		12-1073 (1)	13-1044 (1)	—	—
		— (2)	—	—	—
GL1500A Aspencade	97-00	— (8)	13-1034 (8)	—	643-1081
		— (1)	13-1045 (1)	—	—
GL1500C Valkyrie	97-00	— (8)	13-1034 (8)	—	643-1081
		— (1)	13-1045 (1)	—	—
GL1500C Valkyrie	2003	— (8)	13-1034 (8)	—	643-1081
		— (1)	13-1045 (1)	—	—
GL1500CD Valkyrie	01-03	— (8)	13-1034 (8)	—	643-1081
		— (1)	13-1045 (1)	—	—
GL1500CF Interstate	99-01	— (8)	13-1034 (8)	—	643-1081
		— (1)	13-1045 (1)	—	—
GL1500CT Valkyrie Tourer	97-00	— (8)	13-1034 (8)	—	643-1081
		— (1)	13-1045 (1)	—	—
GL1500I Goldwing Interstate	91-96	12-1045 (7)	13-1034 (8)	—	643-1081
		12-1073 (1)	13-1044 (1)	—	—
		— (2)	—	—	—
GL1500SE Goldwing SE	90-96	12-1045 (7)	13-1034 (8)	—	643-1081
		12-1073 (1)	13-1044 (1)	—	—
		— (2)	—	—	—
GL1500SE	97-00	— (8)	13-1034 (8)	—	643-1081
		— (1)	13-1045 (1)	—	—

Honda ATV

Model	Year	Friction Plate each	Drive(Metal) Plate each	Spring Set	Gasket each
ATC70/K1	73-74	12-1011 (2)	13-1020 (1)	614-115 (4)	—
		12-1077 (1)	13-1001 (1)	—	—
ATC70	78-85	12-1011 (2)	13-1020 (1)	614-115 (4)	—
		12-1077 (1)	13-1001 (1)	—	—
TRX70 Fourtrax 70	86-87	12-1011 (2)	13-1020 (1)	614-115 (4)	—
		12-1077 (1)	13-1001 (1)	—	—
ATC90/K1/K2/K3	70-75	12-1017 (3)	13-1001 (1)	614-118 (4)	—
		—	13-1002 (1)	—	—
		—	13-1003 (1)	—	—
ATC90	76-78	12-1017 (3)	13-1001 (1)	614-118 (4)	—
		—	13-1002 (1)	—	—
		—	13-1003 (1)	—	—
TRX90 Fourtrax 90	93-01	12-1019 (4)	13-1004 (3)	614-139 (4)	—
TRX90 Sportrax 90	02-05	12-1019 (4)	13-1004 (3)	614-139 (4)	—
TRX90 Sportrax 90	2006	12-1019 (4)	13-1004 (3)	614-143 (4)	—
ATC110	79-80	12-1017 (3)	13-1001 (1)	614-132 (4)	643-1023
		—	13-1002 (1)	—	—
		—	13-1003 (1)	—	—
ATC110	81-85	12-1017 (3)	13-1001 (1)	614-118 (4)	643-1023
		—	13-1002 (1)	—	—
		—	13-1003 (1)	—	—
ATC125M	84-85	12-1017 (3)	13-1001 (1)	614-118 (4)	643-1023
		—	13-1002 (1)	—	—
		—	13-1003 (1)	—	—
ATC125M	86-87	12-1019 (4)	13-1004 (3)	614-118 (4)	—
TRX125 Fourtrax	1985	12-1017 (3)	13-1001 (1)	614-118 (4)	643-1023
		—	13-1002 (1)	—	—
		—	13-1003 (1)	—	—
TRX125 Fourtrax	1986	12-1017 (3)	13-1001 (1)	614-118 (4)	—
		—	13-1002 (1)	—	—
		—	13-1003 (1)	—	—
TRX125 Fourtrax	87-88	12-1019 (4)	13-1004 (3)	614-139 (4)	—
ATC185	1980	12-1019 (4)	13-1004 (3)	614-117 (4)	643-1016

Clutch Plates, Clutch Springs, & Clutch Cover Gasket

Honda ATV

Model	Year	Friction Plate each	Drive(Metal) Plate each	Spring Set	Gasket each
ATC185S	81-83	12-1019 (4)	13-1004 (3)	614-117 (4)	643-1016
ATC200	81-83	12-1019 (4)	13-1004 (3)	614-117 (4)	643-1016
ATC200E	82-83	12-1019 (4)	13-1004 (3)	614-117 (4)	643-1016
ATC200ES	1984	12-1019 (4)	13-1004 (3)	614-117 (4)	643-1016
ATC200M	84-85	12-1019 (4)	13-1004 (3)	614-117 (4)	643-1016
ATC200S	84-86	12-1019 (4)	13-1004 (3)	614-117 (4)	643-1016
ATC200X	83-85	12-1019 (5)	13-1004 (4)	614-105 (4)	643-1016
ATC200X	86-87	12-1019 (5)	13-1006 (4)	614-105 (4)	643-1059
TRX200 Fourtrax 200	1984	12-1019 (4)	13-1004 (3)	614-117 (4)	643-1016
TRX200 Fourtrax 200	90-91	12-1019 (5)	13-1006 (4)	614-148 (4)	—
TRX200D Fourtrax Type II	91-97	12-1019 (5)	13-1006 (4)	614-148 (4)	—
TRX200SX Fourtrax	86-88	12-1019 (5)	13-1006 (4)	614-148 (4)	—
ATC250ES	85-87	12-1042 (5)	13-1011 (4)	614-143 (4)	—
ATC250R	81-84	12-1046 (7)	13-1046 (6)	614-116 (6)	
ATC250R	1985	12-1042/2 (7)	— (6)	614-142 (5)	643-1030
ATC250R	1986	12-1042/2 (7)	13-1011 (6)	614-142 (5)	643-1030
ATC250SX	85-87	12-1042 (5)	13-1011 (4)	612-143 (4)	—
TRX250 Fourtrax 250	85-87	12-1042 (5)	13-1011 (4)	612-143 (4)	—
TRX250 Recon	97-01	12-1019 (5)	13-1006 (4)	614-148 (4)	—
TRX250EX Sportrax 250EX	01-02	12-1019 (5)	13-1006 (4)	614-148 (4)	—
TRX250EX Sportrax 250EX	03-05	12-1019 (5)	13-1006 (4)	614-148 (4)	—
TRX250R Fourtrax 250R	86-87	12-1042/2 (7)	13-1011 (6)	614-142 (5)	643-1030
TRX250R Fourtrax 250R	88-89	12-1042/2 (7)	13-1011 (6)	— (5)	643-1030
TRX250TE Recon ES	02-06	12-1019 (5)	— (4)	614-148 (4)	—
TRX250TM Fourtrax Recon	02-06	12-1019 (5)	— (4)	614-148 (4)	—
TRX250X Fourtrax 250X	87-88	12-1042/2 (6)	13-1011 (5)	614-127 (4)	—
TRX250X Fourtrax 250X	91-92	12-1042/2 (6)	13-1011 (5)	614-127 (4)	—
TRX300 Fourtrax 300	88-00	12-1042 (6)	13-1011 (5)	614-147 (4)	643-1072
TRX300EX Fourtrax 300EX	93-00	12-1042/2 (6)	13-1011 (5)	614-127 (4)	643-1087
TRX300EX Sportrax 300EX	01-05	12-1042/2 (6)	13-1011 (5)	614-127 (4)	643-1087
TRX300FW Fourtrax 4x4	1988	12-1042 (6)	13-1011 (5)	614-147 (4)	643-1072
TRX300FW Fourtrax 4x4	90-00	12-1042 (6)	13-1011 (5)	614-147 (4)	643-1072
ATC350X	85-86	12-1042/2 (6)	13-1011 (5)	614-146 (4)	—
TRX350 Fourtrax 4x4	86-87	12-1042 (6)	13-1011 (5)	614-147 (4)	—
TRX350D Foreman 4x4	87-89	12-1042 (6)	13-1011 (5)	614-147 (4)	—
TRX350FE Rancher 4x4 ES	00-06	12-1042 (5)	13-1011 (5)	614-147 (4)	—
		12-1034 (1)	—	—	—
TRX350FM Rancher 4x4	00-06	12-1042 (6)	13-1011 (5)	614-147 (4)	—
TRX350TE Rancher ES	00-06	12-1042 (5)	13-1011 (5)	614-147 (4)	—
		12-1034 (1)	—	—	—
TRX350TM Rancher	00-06	12-1042 (6)	13-1011 (5)	614-147 (4)	—
TRX400EX Fourtrax 400EX	99-00	12-1042/2 (7)	13-1048 (6)	— (5)	643-1088
TRX400EX Sportrax 400EX	01-04	12-1042/2 (7)	13-1048 (6)	— (5)	643-1088
TRX400EX Sportrax 400EX	2005	12-1042/2 (7)	13-1048 (6)	— (5)	643-1088
TRX400FW Foreman	95-01	12-1042 (6)	13-1011 (5)	614-147 (4)	—
TRX400FW Foreman	2003	12-1042 (6)	13-1049 (5)	614-147 (4)	—
TRX450ES Foreman	98-01	12-1042 (6)	13-1011 (5)	614-147 (4)	—
TRX450FE Foreman ES	02-04	12-1042 (6)	13-1049 (5)	614-147 (4)	—
TRX450FM Foreman S	02-04	12-1042 (6)	13-1049 (5)	614-147 (4)	—
TRX450R	04-05	12-1054 (7)	13-1019 (7)	614-122 (5)	—
		— (1)	—	—	—
TRX450S Foreman	98-01	12-1042 (6)	13-1011 (5)	614-147 (4)	—
TRX500FE Foreman S	05-06	12-1042 (7)	13-1049 (6)	— (5)	—
TRX500FM Foreman 4x4	05-06	12-1042 (7)	13-1049 (6)	— (5)	—
TRX500TM Foreman	05-06	12-1042 (7)	13-1049 (6)	— (5)	—

Honda Dual Sport & Offroad

Model	Year	Friction Plate each	Drive(Metal) Plate each	Spring Set	Gasket each
CRF50F	04-07	12-1011 (2)	13-1001 (1)	— (4)	643-1020
		12-1077 (1)	13-1020 (1)	—	—
QA50K0-K3	70-75	12-1012 (2)	— (3)	614-136 (4)	—
XR50R	00-03	12-1011 (2)	13-1001 (1)	— (4)	643-1020
		12-1077 (1)	13-1020 (1)	—	—
Z50AK0	68-69	12-1012 (2)	— (3)	614-136 (4)	—
Z50A	76-78	12-1012 (2)	— (3)	614-136 (4)	—
Z50AK1-AK6 Mini Trail 50	69-75	12-1012 (2)	— (3)	614-136 (4)	—
Z50R	79-87	12-1012 (2)	— (3)	614-136 (4)	—
Z50R	88-89	12-1011 (2)	— (3)	— (4)	—
Z50RD	1986	12-1012 (2)	— (3)	614-136 (4)	—
Z50R	91-99	12-1011 (2)	13-1001 (1)	— (4)	—
		12-1077 (1)	13-1020 (1)	—	—

Honda Dual Sport & Offroad

Model	Year	Friction Plate each	Drive(Metal) Plate each	Spring Set	Gasket each
CR60R	83-84	12-1019 (4)	13-1005 (3)	614-131 (4)	—
CRF70F	04-07	12-1011 (2)	13-1001 (1)	614-115 (4)	643-1020
		12-1077 (1)	13-1020 (1)	—	—
CT70	76-82	12-1011 (2)	13-1001 (1)	614-115 (4)	—
		12-1077 (1)	13-1020 (1)	—	—
CT70K0/K1 Trail 70	69-72	12-1012 (2)	13-1001 (3)	614-115 (4)	—
CT70H Trail 70	70-73	12-1012 (2)	13-1001 (3)	614-115 (4)	—
CT70K2-K4 Trail 70	73-75	12-1011 (2)	13-1001 (3	614-115 (4)	—
SL70K0/K1 Moto Sport	71-73	12-1012 (2)	— (2)	— (4)	—
XR70R	97-03	12-1011 (2)	13-1001 (1)	614-115 (4)	643-1020
		12-1077 (1)	13-1020 (1)	—	—
XL75	77-79	12-1019 (3)	13-1005 (2)	614-129 (4)	643-1026
XR75K0/K1/K2	73-75	12-1019 (3)	13-1005 (2)	614-138 (4)	—
XR75	1976	12-1019 (3)	13-1005 (2)	614-138 (4)	—
XR75	77-78	12-1019 (3)	13-1005 (2)	614-129 (4)	643-1026
CR80R	80-82	12-1019 (4)	13-1005 (3)	614-131 (4)	—
CR80R	1983	12-1019 (4)	13-1005 (3)	614-139 (4)	—
CR80R	1984	12-1019 (5)	13-1007 (4)	614-139 (4)	643-1037
CR80R	1985	12-1019 (5)	13-1007 (4)	614-149 (4)	643-1037
CR80R	1986	12-1019 (5)	13-1007 (4)	614-149 (4)	643-1053
CR80R	87-02	12-1019 (5)	13-1005 (4)	614-149 (4)	643-1053
CR80RB	96-02	12-1019 (5)	13-1005 (4)	614-149 (4)	643-1053
CRF80F	2004	12-1019 (3)	13-1005 (2)	614-147 (4)	643-1026
CRF80F	05-07	12-1019 (3)	13-1005 (2)	614-139 (4)	643-1026
XL80S	80-85	12-1019 (3)	13-1005 (2)	614-129 (4)	643-1026
XR80	79-84	12-1019 (3)	13-1005 (2)	614-129 (4)	643-1026
XR80R	85-88	12-1019 (3)	13-1005 (2)	614-139 (4)	643-1026
XR80R	90-91	12-1019 (3)	13-1005 (2)	614-139 (4)	643-1026
XR80R	93-03	12-1019 (3)	13-1005 (2)	614-139 (4)	643-1026
CR85R	03-07	12-1019 (5)	13-1005 (4)	614-149 (4)	643-1053
CR85RB	03-07	12-1019 (5)	13-1005 (4)	614-149 (4)	643-1053
CT90K1-K6 Trail 90	69-75	12-1017 (3)	— (4)	— (4)	—
CT90 Trail 90	76-79	12-1017 (3)	— (4)	— (4)	—
ST90/K1/K2 Trail Sport 90	73-75	12-1017 (3)	— (4)	— (4)	—
SL100K0-K3 Motosport	70-73	12-1019 (5)	13-1005 (4)	614-101 (4)	—
CRF100F	04-07	12-1019 (4)	13-1005 (3)	614-147 (4)	643-1026
XL100/K1	74-75	12-1019 (5)	13-1005 (4)	614-101 (4)	643-1018
XL100	76-78	12-1019 (5)	13-1005 (4)	614-101 (4)	643-1018
XL100S	79-80	12-1019 (4)	13-1005 (3)	614-138 (4)	643-1026
XL100S	81-85	12-1019 (4)	13-1005 (3)	614-129 (4)	643-1026
XR100	81-84	12-1019 (4)	13-1005 (3)	614-129 (4)	643-1026
XR100R	85-86	12-1019 (4)	13-1005 (3)	614-129 (4)	643-1026
XR100R	87-03	12-1019 (4)	13-1005 (3)	614-147 (4)	643-1026
CT110 Trail 110	80-84	12-1017 (3)	— (4)	614-132 (4)	643-1023
CT110 Trail 110	1986	12-1017 (3)	— (4)	614-132 (4)	643-1023
CR125M Elsinore	74-78	12-1019/2 (6)	13-1009 (5)	— (4)	—
CR125R	79-80	12-1047 (6)	13-1009 (5)	614-119 (4)	—
CR125R	1981	12-1019 (6)	13-1009 (5)	614-119 (4)	—
CR125R	1982	12-1019 (7)	— (6)	614-119 (4)	—
CR125R	1983	12-1042/2 (6)	— (5)	614-133 (5)	—
CR125R	84-85	12-1042/2 (6)	— (5)	614-133 (5)	643-1043
CR125R	1986	12-1087 (7)	— (6)	614-133 (5)	643-1043
CR125R	87-89	12-1087 (7)	— (6)	614-133 (5)	—
CR125R	90-99	12-1087 (7)	— (6)	614-133 (5)	643-1074
CR125R	00-07	12-1087 (8)	— (7)	614-133 (5)	643-1074
CT125 Trail 125	1977	12-1019 (5)	13-1005 (4)	614-101 (4)	—
NX125	88-90	12-1019 (4)	13-1005 (4)	614-109 (4)	—
		12-1068 (1)	—	—	—
SL125/K1/K2	71-73	12-1019 (5)	13-1005 (4)	614-101 (4)	—
TL125/K1/K2 Trials	73-75	12-1019 (4)	13-1005 (3)	614-101 (4)	—
TL125S Trials	1976	12-1019 (5)	13-1005 (4)	614-101 (4)	—
XL125/K1	74-75	12-1019 (5)	13-1005 (4)	614-101 (4)	—
XL125	76-78	12-1019 (5)	13-1005 (4)	614-101 (4)	—
XL125S	79-82	12-1019 (5)	13-1005 (4)	614-137 (4)	643-1078
XL125S	84-85	12-1019 (5)	13-1005 (4)	614-137 (4)	643-1078
SL175/K1 Motosport	70-72	12-1034 (5)	13-1046 (4)	— (4)	—
XL175/K1/K2	73-75	12-1034 (5)	13-1046 (4)	— (4)	—
XL175	76-78	12-1034 (5)	13-1046 (4)	— (4)	—
XL185S	79-83	12-1019 (5)	13-1005 (4)	614-101 (4)	643-1078
XR185	1979	12-1019 (5)	13-1005 (4)	614-101 (4)	643-1078
TLR200 Reflex	86-87	12-1019 (5)	13-1005 (4)	614-154 (4)	643-1078

Clutch Plates, Clutch Springs, & Clutch Cover Gasket

Honda Dual Sport & Offroad

Model	Year	Friction Plate each	Drive(Metal) Plate each	Spring Set	Gasket each
TR200 Fatcat	1986	12-1019 (5)	13-1006 (4)	614-148 (4)	643-1059
XL200R	83-84	12-1019 (5)	13-1005 (4)	614-105 (4)	643-1078
XR200	80-84	12-1019 (5)	13-1005 (4)	614-150 (4)	643-1078
XR200R	81-83	12-1019 (5)	13-1005 (4)	614-150 (4)	643-1078
XR200R	84-85	12-1042/2 (5)	13-1011 (4)	614-105 (4)	643-1047
XR200R	86-88	12-1019 (5)	13-1005 (4)	614-105 (4)	643-1078
XR200R	90-91	12-1019 (5)	13-1005 (4)	614-105 (4)	643-1078
XR200R	1993	12-1019 (5)	13-1005 (4)	614-105 (4)	643-1078
XR200R	94-02	12-1019 (5)	13-1005 (4)	614-150 (4)	643-1078
CRF230F	03-07	12-1019 (5)	— (5)	— (4)	—
		12-1068 (1)	—	—	—
CR250M/M1 Elsinore	73-76	12-1061/3 (7)	13-1018 (6)	— (6)	—
CR250R	78-80	12-1046 (7)	13-1046 (6)	614-116 (6)	—
CR250R	81-82	12-1061/3 (7)	13-1046 (6)	614-134 (6)	—
CR250R	1983	12-1054 (7)	— (6)	614-134 (6)	—
CR250R	1984	12-1054 (7)	— (6)	614-134 (6)	—
CR250R	85-87	12-1054 (7)	— (6)	614-134 (6)	643-1046
CR250R	88-89	12-1054 (7)	— (6)	614-134 (6)	—
CR250R	90-91	12-1054 (8)	— (7)	614-134 (6)	—
CR250R	92-96	12-1054 (8)	— (7)	614-134 (6)	643-1085
CR250R	97-01	12-1054 (8)	— (7)	614-122 (6)	643-1085
CR250R	02-04	12-1054 (8)	— (7)	614-122 (6)	—
CR250R	05-07	12-1054 (8)	— (7)	614-122 (6)	—
CRF250R	04-07	12-1087 (8)	13-1011 (7)	— (5)	—
CRF250X	04-06	12-1087 (7)	13-1011 (7)	— (5)	—
		— (1)	—	—	—
MR250 Elsinore	1976	12-1061/3 (7)	13-1018 (6)	— (6)	—
MT250/K1	74-75	12-1061/3 (7)	13-1018 (6)	— (6)	—
NX250	88-90	12-1042/2 (6)	13-1011 (5)	614-152 (4)	—
TL250 Trials	75-76	12-1061/3 (7)	13-1025 (6)	614-101 (4)	—
XL250/K1/K2 Motosport	72-75	12-1061/3 (7)	13-1025 (6)	614-101 (4)	—
XL250	1976	12-1061/3 (7)	13-1025 (6)	614-101 (4)	—
XL250S	78-80	12-1042 (4)	13-1046 (3)	614-135 (4)	643-1009
XL250S	1981	12-1042 (4)	13-1046 (4)	614-135 (4)	643-1009
		12-1034 (1)	—	—	—
XL250R	82-83	12-1042 (4)	13-1046 (4)	614-135 (4)	643-1009
		12-1034 (1)	—	—	—
XL250R	84-87	12-1042/2 (5)	13-1011 (5)	614-127 (4)	643-1047
XR250	79-80	12-1042 (4)	13-1046 (3)	612-135 (4)	643-1009
XR250R	81-82	12-1042 (4)	13-1046 (4)	612-135 (4)	643-1009
		12-1034 (1)	—	—	—
XR250R	84-85	12-1042/2 (5)	13-1011 (4)	614-127 (4)	643-1047
XR250R	86-95	12-1042/2 (6)	13-1011 (5)	614-127 (4)	643-1047
XR250R	96-04	12-1042/2 (6)	13-1011 (5)	614-127 (4)	643-1086
XR250L	91-96	12-1042/2 (6)	13-1011 (5)	614-127 (4)	643-1047
SL350/K1/K2 Moto Sport	70-73	12-1061/3 (8)	— (8)	614-102 (4)	643-1013
XL350/K1	74-75	12-1061/3 (7)	13-1025 (6)	— (4)	—
XL350	76-78	12-1061/3 (7)	13-1025 (6)	— (4)	—
XL350R	84-85	12-1042/2 (5)	13-1011 (5)	614-146 (4)	—
		12-1034 (1)	—	—	—
XR350R	83-84	12-1042/2 (6)	13-1011 (5)	614-127 (4)	—
XR350R	1985	12-1042/2 (6)	13-1011 (5)	614-127 (4)	—
XR400R	96-04	12-1042/2 (7)	13-1011 (6)	— (5)	643-1088
CR450R	1981	12-1061/3 (7)	13-1018 (6)	614-134 (6)	—
CRF450R	02-03	12-1054 (8)	13-1019 (7)	614-122 (6)	—
CRF450R	04-05	12-1054 (8)	13-1019 (7)	614-134 (6)	—
CRF450R	06-07	12-1054 (8)	13-1019 (7)	614-122 (6)	—
CRF450X	05-07	12-1054 (8)	13-1019 (7)	614-134 (6)	—
CR480R	1982	12-1061/3 (7)	13-1018 (6)	614-134 (6)	—
CR480R	1983	12-1054 (7)	— (6)	614-122 (6)	—
CR500R	1984	12-1054 (7)	— (6)	614-122 (6)	—
CR500R	85-89	12-1054 (7)	— (6)	614-122 (6)	643-1054
CR500R	90-01	12-1054 (8)	— (7)	614-122 (6)	643-1054
XL500S	79-81	12-1042 (6)	13-1014 (6)	614-107 (4)	643-1009
		12-1034 (1)	—	—	—
XL500R	1982	12-1042 (6)	13-1014 (6)	614-107 (4)	643-1009
XR500	79-80	12-1042 (7)	13-1014 (6)	614-107 (4)	643-1009
XR500R	81-82	12-1042 (7)	13-1014 (6)	614-107 (4)	643-1009
XR500R	83-84	12-1054 (7)	13-1015 (6)	614-126 (4)	643-1028
XL600R	83-87	12-1054 (7)	13-1015 (6)	614-126 (4)	643-1028

Honda Dual Sport & Offroad

Model	Year	Friction Plate each	Drive(Metal) Plate each	Spring Set	Gasket each
XL600V Transalp	89-90	12-1042/2 (6)	13-1013 (6)	— (4)	643-1071
		12-1034 (1)	—	—	—
XR600R	85-00	12-1054 (7)	13-1015 (6)	614-151 (4)	643-1028
NX650	88-89	12-1054 (7)	13-1015 (6)	614-151 (4)	643-1028
XR650L Dual Sport	93-07	12-1061/4 (7)	13-1015 (6)	614-151 (4)	643-1028
XR650R	00-07	12-1059 (6)	13-1015(6)	— (4)	—
		— (1)	—	—	—

Kawasaki Street

Model	Year	Friction Plate each	Drive(Metal) Plate each	Spring Set	Gasket each
AR50A1	1982	12-4038 (3)	13-4012 (2)	614-416 (6)	—
AR80A1	1982	12-4038 (4)	13-4012 (3)	614-416 (6)	—
G3SS/A/B/C/D-90	69-74	12-4038 (4)	13-4012 (3)	614-417 (6)	—
G3TR-90 Bushmaster	69-70	12-4038 (4)	13-4012 (3)	614-417 (6)	—
MC1/MC1A/MC1B-90	73-75	12-4038 (4)	13-4012 (3)	614-417 (6)	—
G3SSE-100	1975	12-4038 (4)	13-4012 (3)	614-417 (6)	—
G3TRA-100 Bushmaster	1971	12-4038 (4)	13-4012 (3)	614-417 (6)	—
G4TR-100 Trail Boss	1970	12-4038 (4)	13-4012 (3)	614-417 (6)	—
G4TRA/B/C/D/E 100	71-75	12-4038 (4)	13-4012 (3)	614-417 (6)	—
G5/G5A/B/C-100	72-75	12-4038 (4)	13-4012 (3)	614-417 (6)	—
KE100A5-A10	76-81	12-4038 (4)	13-4012 (3)	614-417 (6)	—
KE100B1-B20	82-01	12-4038 (4)	13-4012 (3	614-417 (6)	
KH100B7/B8	76-77	12-4038 (4)	13-4012 (3	614-417 (6)	—
KM100A1-A7	76-81	12-4038 (4)	13-4012 (3	614-417 (6)	—
KV100A7	1976	12-4038 (4)	13-4012 (3)	614-417 (6)	—
F6/A/B-125 Enduro	71-73	12-4041 (5)	13-4001 (4)	— (5)	—
KS125/A	74-75	12-4041 (5)	13-4001 (4)	614-414 (5)	—
KE125A3-A10	76-83	12-4041 (5)	13-4001 (4)	614-414 (5)	—
F7A/B/C/D-175 Enduro	71-75	12-4041 (5)	13-4001 (5)	— (5)	—
KE175B1/B2/B3	76-78	12-4041 (5)	13-4001 (4)	614-413 (6)	—
KE175D2/D3/D4/D5	80-83	12-4041 (5)	13-4001 (4)	614-413 (6)	—
KZ200A1/A2	78-79	12-4049 (5)	13-4002 (5)	614-406 (5)	—
KZ200A1/A2 eng.005063 on	78-79	12-4049 (6)	13-4002 (5)	614-406 (5)	—
EL250B2/B3 Eliminator	88-89	12-4040 (5)	13-4004 (4)	614-426 (4)	—
EL250E1/E2/E3/E4 250HS	91-94	12-4040 (5)	13-4004 (4)	614-426 (4)	—
EX250E1/E2 Ninja 250R	86-87	12-4040 (5)	13-4004 (4)	614-426 (4)	—
EX250F2/F3/F4 Ninja 250R	88-90	12-4040 (5)	13-4004 (4)	614-426 (4)	—
EX250F6-F19 Ninja 250R	92-05	12-4040 (5)	13-4004 (4)	614-426 (4)	—
EX250F6F/F7F Ninja 250R	06-07	12-4040 (5)	13-4004 (4)	614-426 (4)	—
KE250B1/B2/B3	77-79	12-1061/4 (6)	13-4008 (5)	614-415 (5)	—
KH250A5 2-stroke triple	1976	12-4041 (6)	13-4001 (5)	— (5)	—
KL250A1-A5	78-82	12-4049 (7)	13-4002 (6)	— (5)	—
KL250C1/C2	83-84	12-4049 (7)	13-4002 (6)	614-406 (5)	—
KL250D2-D22 KLR250	85-05	12-4049 (5)	13-4028 (5)	614-406 (5)	—
KL250G4-G7 Super Sherpa	00-03	12-4058 (7)	13-4044 (5)	— (6)	—
		—	13-4038 (1)	—	—
KLX250H6F KLX250S	2006	12-4058 (7)	13-4044 (5)	— (6)	—
		—	13-4038 (1)	—	—
KZ250D1/D2 LTD & CSR	80-81	12-4049 (7)	13-4002 (6)	614-406 (5)	—
KZ250L1 CSR	1982	12-4049 (7)	13-4002 (6)	614-406 (5)	—
KZ250W1 LTD	1983	12-4049 (7)	13-4002 (6)	614-406 (5)	—
S1A/S1B/S1C-250 triple	73-75	12-4041(6)	13-4001 (5)	— (5)	—
EX305B1 GPz	1983	12-1061/4 (7)	13-4008 (6)	614-411 (5)	—
KZ305A1/A2 CSR	81-82	12-1061/4 (7)	13-4008 (6)	614-415 (5)	—
KZ305B1 CSR Belt	1982	12-1061/4 (7)	13-4008 (6)	614-415 (5)	—
KZ305B2/B3 LTD	87-88	12-1061/4 (7)	13-4008 (6)	614-415 (5)	—
S2/S2A 350 2-stroke	72-73	12-4041 (6)	13-4001 (5)	— (5)	—
KZ400A1/A2 Deluxe	77-78	— (6)	13-4004 (5)	614-408 (4)	—
KZ400B1/B2	78-79	— (6)	13-4004 (5)	614-408 (4)	643-4025
KZ400C1	1978	— (6)	13-4004 (5)	614-408 (4)	643-4025
KZ400/D/D3/D4	74-77	— (6)	13-4004 (5)	614-408 (4)	—
KZ400H1 LTD	1979	— (6)	13-4004 (5)	614-408 (4)	643-4025
KZ400S/S2/S3 Special	75-77	— (6)	13-4004 (5)	614-408 (4)	—
KH400A5 2-stroke triple	1976	12-4041 (7)	13-4001 (6)	— (5)	—
	74-75	12-4041 (7)	13-4001 (6)	— (5)	—
KZ440A1-A4 LTD	80-83	— (6)	13-4004 (5)	614-408 (4)	643-4025
KZ440B1/B2	80-81	— (6)	13-4004 (5)	614-408 (4)	643-4025
KZ440D1-D5 LTD Belt	80-83	— (6)	13-4004 (5)	614-408 (4)	643-4025
KZ440G1 Sport Belt	1983	— (6)	13-4004 (5)	614-408 (4)	643-4025
EN450A1-A6 LTD 454	85-90	12-4040 (7)	13-4004 (6)	614-412 (5)	643-4039
EN500A1-A7 Vulcan 500	90-96	12-4040 (7)	13-4004 (6)	614-412 (5)	643-4039
EN500C1-C10 LTD	96-05	12-4040 (7)	13-4004 (6)	614-412 (5)	643-4039

Clutch Plates, Clutch Springs, & Clutch Cover Gasket

Kawasaki Street

Model	Year	Friction Plate each	Drive(Metal) Plate each	Spring Set	Gasket each
EN500C6F/C7F Vulcan 500	06-07	12-4040 (7)	13-4004 (6)	614-412 (5)	643-4039
EX500A1-A7	87-93	12-4040 (7)	13-4004 (6)	614-412 (5)	643-4039
EX500D1/D2/D3 Ninja 500	94-96	12-4040 (7)	13-4004 (6)	614-412 (5)	643-4039
EX500D4-D12 Ninja 500R	97-05	12-4040 (7)	13-4004 (6)	614-412 (5)	643-4039
EX500D6F/D7F Ninja 500R	06-07	12-4040 (7)	13-4004 (6)	614-412 (5)	643-4039
H1/A/B/C-500 Mach III	69-72	12-4049 (7)	13-4002 (6)	——— (5)	———
H1C/H1D/H1E/H1F-500	72-75	12-4049 (7)	13-4002 (6)	——— (5)	———
KH500A8 2-Stroke Triple	1976	12-4049 (7)	13-4002 (6)	——— (5)	———
KZ550A1/A2/A3/A4	80-83	12-4040 (7)	13-4004 (6)	614-407 (5)	643-4024
KZ550C1/C2/C3/C4 LTD	80-83	12-4040 (7)	13-4004 (6)	614-407 (5)	643-4024
KZ550D1 GPz	1981	12-4040 (7)	13-4004 (6)	614-407 (5)	643-4024
KZ550F1/F2 Spectre & LTD	83-84	12-4040 (7)	13-4004 (6)	614-407 (5)	643-4024
KZ550H1/H2 GPz	82-83	12-4040 (7)	13-4004 (6)	614-407 (5)	643-4024
ZR550B1/B2 Zephyr	90-91	12-4040 (7)	13-4004 (5)	614-407 (5)	643-4024
		———	13-4023 (1)	———	———
ZX550A1/A2 GPz	84-85	12-4040 (7)	13-4004 (6)	614-407 (5)	643-4024
KL600A1 KLR	1984	12-4040 (7)	13-4004 (6)	614-407 (5)	643-4013
KL600B1/B2 KLR	85-86	12-4040 (7)	13-4004 (6)	614-412 (5)	643-4013
ZL600A1/A2 Eliminator	86-87	12-4040 (7)	13-4004 (6)	614-405 (6)	643-4035
ZL600B2/B3 Eliminator	96-97	12-4040 (7)	13-4004 (6)	——— (6)	643-4035
ZX600A1/A2/A3 Ninja 600R	85-87	12-4040 (7)	13-4004 (6)	614-407 (5)	643-4035
ZX600B1 Ninja 600RX	1987	12-4040 (7)	13-4004 (6)	614-407 (5)	643-4035
ZX600C1-C10 Ninja 600R	88-97	12-4040 (7)	13-4004 (5)	614-407 (5)	643-4035
		———	13-4023 (1)	———	———
ZX600D1-D4 Ninja ZX-6	90-93	12-4040 (7)	13-4007 (6)	614-401 (5)	———
ZX600E1-E10 Ninja ZX-6	93-02	12-4040 (7)	13-4007 (6)	——— (5)	———
ZX600E11/E12 ZZR600	03-04	12-4040 (7)	13-4007 (6)	——— (5)	———
ZX600F1/F2/F3 Ninja ZX-6R	95-97	12-4063 (9)	13-4054 (8)	——— (4)	———
ZX600G1/G2 Ninja ZX-6R	98-99	12-4063 (9)	13-4054 (8)	——— (4)	———
ZX600J1/J2/J3 Ninja ZX-6R	00-02	12-4063 (9)	13-4002 (8)	——— (4)	———
ZX600J4/J6F ZZR600	05-06	12-4063 (9)	13-4002 (8)	——— (4)	———
ZX600K1 Ninja ZX-6RR	2003	12-4063 (9)	13-4002 (8)	——— (4)	———
ZX600N1/N6F ZX-6RR	05-06	12-4063 (8)	——— (7)	614-431 (6)	———
ZX636B1/B2 Ninja ZX-6R	03-04	12-4063 (9)	13-4002 (8)	——— (4)	———
ZX636C1 Ninja ZX-6R	2005	12-4063 (8)	13-4002 (8)	——— (6)	———
ZX636C6F Ninja ZX-6R	2006	12-4063 (8)	13-4060 (5)	614-431 (6)	———
		———	13-4061 (2)	———	
ZX636D6F Ninja ZX-6R	2006	12-4063 (8)	13-4060 (5)	614-431 (6)	———
		———	13-4061 (2)	———	———
EJ650A2/A3 W650 Twin	00-01	12-4040 (8)	13-4005 (7)	614-412 (5)	———
KL650A1-A9	87-95	12-4040 (7)	13-4024 (6)	614-412 (5)	643-4013
KL650A10-A19 KLR650	96-05	12-4040 (8)	13-4024 (7)	614-401 (5)	643-4013
KL650A6F/A7F KLR650	06-07	12-4040 (8)	13-4024 (7)	614-401 (5)	643-4013
KL650B2/B3 Tengai KLR650	90-91	12-4040 (7)	13-4024 (6)	614-412 (5)	643-4013
KLX650C1-C4 Dual Sport	93-96	12-4040 (7)	13-4024 (6)	614-412 (5)	———
KZ650B1/B2/B2A/B3	77-79	12-1045 (7)	13-4003 (6)	614-401 (5)	643-4005
KZ650C1/C2/C3 Custom	77-79	12-1045 (7)	13-4003 (6)	614-401 (5)	643-4005
KZ650D1/D1A/D2 SR	78-79	12-1045 (7)	13-4003 (6)	614-401 (5)	643-4005
KZ650E1 LTD	1980	12-1045 (7)	13-4003 (6)	614-401 (5)	643-4005
KZ650F1	1980	12-1045 (7)	13-4003 (6)	614-401 (5)	643-4005
KZ650H1/H2/H3 CSR	81-83	12-1045 (7)	13-4003 (6)	614-401 (5)	643-4005
KZ700A1	1984	12-1045 (7)	13-4003 (6)	614-401 (5)	643-4005
VN700A1 Vulcan 700	1985	12-4040 (8)	13-4005 (7)	614-401 (5)	———
ZN700A1/A2 LTD	84-85	12-1045 (7)	13-4003 (6)	614-401 (5)	643-4005
H2B/H2C 750 Mach IV	74-75	12-4049 (6)	——— (6)	——— (5)	———
		——— (1)	———	———	———
KZ750B1-B4 (2 cyl)	76-79	12-4040 (8)	13-4005 (7)	614-401 (5)	643-4002
KZ750E1/E2/E3	80-82	12-1045 (7)	13-4003 (6)	614-401 (5)	643-4005
KZ750F1 LTD	1983	12-1045 (7)	13-4003 (6)	614-401 (5)	643-4005
KZ750G1 LTD (2 cylinder)	1980	12-4040 (8)	13-4005 (7)	614-401 (5)	643-4002
KZ750H1/H2/H3/H4 LTD	80-83	12-1045 (7)	13-4003 (6)	614-401 (5)	643-4005
KZ750K1/K2 (2 cylinder)	83-84	12-4040 (8)	13-4005 (7)	614-401 (5)	643-4002
KZ750L3	1983	12-1045 (7)	13-4003 (6)	614-401 (5)	643-4005
KZ750M1 CSR (2 cylinder)	1982	12-4040 (8)	13-4005 (7)	614-401 (5)	643-4002
KZ750N1/N2 Spectre	82-83	12-1045 (7)	13-4003 (6)	614-401 (5)	643-4005
KZ750R1 GPz	1982	12-1045 (7)	13-4003 (6)	614-401 (5)	643-4005
VN750A2-A21 Vulcan 750	86-05	12-4040 (8)	13-4005 (7)	614-401 (5)	———
VN750A6F Vulcan 750	2006	12-4040 (8)	13-4005 (7)	614-401 (5)	———
ZR750C1/C2/C3 Zephyr 750	91-93	12-4062 (7)	13-4049 (6)	614-412 (5)	643-4005
ZR750F2 ZR-7	2000	12-4062 (7)	13-4049 (6)	614-424 (5)	643-4005
ZR750H1/H2/H3 ZR-7S	01-03	12-4062 (7)	13-4049 (6)	614-424 (5)	643-4005

Kawasaki Street

Model	Year	Friction Plate each	Drive(Metal) Plate each	Spring Set	Gasket each
ZX750A1/A2/A3 GPz	83-85	12-1045 (7)	13-4003 (6)	614-401(5)	643-4005
ZX750E1/E2 GPz Turbo	84-85	12-4062 (8)	13-4003 (7)	614-401(5)	643-4005
ZX750F1-F4 Ninja 750R	87-90	12-4040 (8)	13-4022 (7)	614-401(5)	———
ZX750H1/H2 Ninja ZX-7	89-90	12-4040 (7)	——— (6)	614-405(6)	———
ZX750J1/J2 Ninja ZX-7	91-92	12-4040 (8)	——— (7)	614-401(5)	———
ZX750K1/K2 Ninja ZX-7R	91-92	12-4040 (8)	——— (7)	——— (6)	———
ZX750L1/L2/L3 Ninja ZX-7	93-95	12-4040 (8)	——— (7)	——— (6)	———
ZX750M1/M2 Ninja ZX-7R	93-94	12-4040 (8)	——— (7)	——— (6)	———
ZX750N1/N2 Ninja ZX-7RR	96-97	12-4040 (8)	——— (7)	614-431(6)	———
ZX750P1-P8 Ninja ZX-7R	96-03	12-4040 (8)	——— (7)	——— (6)	———
VN800A1-A5 Vulcan 800	95-99	12-4040 (8)	13-4005 (7)	614-412(5)	———
VN800A6/A7 Vulcan 800	00-01	12-4040 (8)	13-4005 (7)	614-412(5)	———
VN800A8-A11 Vulcan 800	02-05	12-4040 (8)	13-4005 (7)	614-401(5)	———
VN800B1-B6 Vulcan Classic	96-01	12-4040 (8)	13-4005 (7)	614-412(5)	———
VN800B7-B10 Classic	02-05	12-4040 (8)	13-4005 (7)	614-401(5)	———
VN800C1/C2 Vulcan Drifter	99-00	12-4040 (8)	13-4005 (7)	614-401(5)	———
VN800E1-E6F Drifter	01-06	12-4040 (8)	13-4005 (7)	614-401(5)	———
KZ900A4/A5	76-77	12-1045 (8)	13-4003 (7)	614-401(5)	643-4001
KZ900B1 LTD	1976	12-1045 (8)	13-4003 (7)	614-401(5)	643-4001
VN900B6F/B7F Classic	06-07	12-4040 (8)	13-4005 (7)	614-401(5)	———
VN900C7F Vulcan Custom	2007	12-4040 (8)	13-4005 (7)	614-401(5)	———
VN900D6F/D7F Classic LT	06-07	12-4040 (8)	13-4005 (7)	614-401(5)	———
Z1/Z1A/Z1B-900	73-75	12-1045 (8)	13-4003 (7)	614-401(5)	643-4001
ZL900A1/A2 Eliminator	85-86	12-4040 (9)	13-4007 (7)	614-405(6)	643-4014
		———	13-4023 (1)	———	———
		———	13-4024 (1)	———	———
ZX900A1/A2/A3 Ninja 900R	84-86	12-4040 (8)	13-4005 (7)	614-401(5)	643-4014
ZX900B1-B4 Ninja ZX-9R	94-97	12-4040 (8)	——— (7)	614-431(6)	———
ZX900C1/C2 Ninja ZX-9R	98-99	12-4063(10)	13-4054 (9)	——— (5)	———
ZX900E1/E2 Ninja ZX-9R	00-01	12-4063 (10)	13-4054 (9)	——— (5)	———
ZX900F1/F2 Ninja ZX-9R	02-03	12-4063(10)	13-4054 (9)	——— (5)	———
KZ1000A1/A2	77-78	12-1045 (8)	13-4003 (7)	614-401(5)	643-4001
KZ1000A3/A3A/A4 MKII	79-80	12-1045 (8)	13-4003 (7)	614-401(5)	643-4001
KZ1000B1/B2/B3/B4 LTD	77-80	12-1045 (8)	13-4003 (7)	614-401(5)	643-4001
KZ1000C1/C1A-C4 Police	78-81	12-1045 (8)	13-4003 (7)	614-401(5)	643-4001
KZ1000D1 Z1R	1978	12-1045 (8)	13-4003 (7)	614-401(5)	643-4001
KZ1000D1 Z1R	1980	12-1045 (8)	13-4003 (7)	614-401(5)	643-4001
KZ1000E1/E2 Shaft ST	79-80	12-4040 (9)	13-4007 (8)	614-405(6)	643-4001
KZ1000G1 LTD Classic	1980	12-1045 (8)	13-4003 (7)	614-401(5)	643-4001
KZ1000J1/J2/J3	81-83	12-4040 (9)	13-4007 (8)	614-401(5)	643-4004
KZ1000K1/K2 LTD	81-82	12-4040 (9)	13-4007 (8)	614-401(5)	643-4004
KZ1000M1/M2 CSR	81-82	12-4040 (9)	13-4007 (8)	614-401(5)	643-4004
KZ1000P1-P21 Police	82-02	12-4040 (9)	13-4007 (8)	614-401(5)	643-4004
KZ1000P24 Police	2005	12-4040 (9)	13-4007 (8)	614-401(5)	643-4004
KZ1000R1/R2 Replica	82-83	12-4040 (9)	13-4007 (8)	614-401(5)	643-4004
ZG1000A1-A20 Concours	86-05	12-4040 (9)	——— (8)	614-405(6)	643-4054
ZG1000A6F Concours	2006	12-4040 (9)	——— (8)	614-405(6)	643-4054
ZL1000A1 Eliminator	1987	12-4040 (9)	13-4007 (8)	614-401(5)	643-4014
ZR1000A1-A6F Z1000	03-06	12-4063 (10)	13-4054 (9)	——— (5)	———
ZX1000A1/A2 Ninja 1000R	86-87	12-4040 (9)	13-4007 (8)	614-405(6)	643-4014
ZX1000B1-B3 Ninja ZX-10	88-90	12-4040 (9)	13-4027 (6)	614-405(6)	643-4014
		———	13-4023 (2)	———	———
ZX1000C1/C2 Ninja ZX-10R	04-05	12-4063 (10)	——— (9)	——— (6)	———
ZX1000D6F/D7F ZX-10R	06-07	12-4063 (10)	——— (9)	——— (6)	———
KZ1100A1/A2/A3 Shaft	81-83	12-4040 (9)	13-4007 (8)	614-405(6)	643-4004
KZ1100B1/B2 GPz	81-82	12-4040 (9)	13-4007 (8)	614-401(5)	643-4004
KZ1100D1/D2 Spectre	82-83	12-4040 (9)	13-4007 (8)	614-405(6)	643-4004
KZ1100L1 LTD	1983	12-4040 (9)	13-4007 (8)	614-405(6)	643-4004
ZN1100B1/B2 LTD	84-85	12-4040 (9)	13-4007 (8)	614-405(6)	643-4004
ZR1100A1/A2/A3	92-94	12-4040 (9)	13-4007 (8)	614-405(6)	643-4014
ZR1100C3/C4 ZRX1100	99-00	12-4040 (9)	13-4007 (8)	614-405(6)	643-4014
ZX1100A1/A2 GPz	83-84	12-4040 (9)	13-4007 (8)	614-405(6)	643-4004
ZX1100C1-C4 Ninja ZX-11	90-93	12-4062 (9)	13-4042 (8)	614-431(6)	643-4014
ZX1100D1-D9 Ninja ZX-11	93-01	12-4062 (9)	13-4042 (8)	614-431(6)	643-4014
ZX1100E1/E2/E3 GPz	95-97	12-4062 (9)	13-4042 (8)	614-431(6)	643-4014
ZX1100F1 GPz (ABS)	1996	12-4062 (9)	13-4042 (8)	614-431(6)	643-4014
ZG1200A1 Voyager XII	1986	12-4040 (9)	13-4027 (6)	614-405(6)	643-4051
		———	13-4023 (2)	———	———
ZG1200B1-B14 Voyager XII	87-90	12-4040 (9)	13-4027 (6)	614-405(6)	643-4051
		———	13-4023 (2)	———	———

Clutch Plates, Clutch Springs, & Clutch Cover Gasket

Kawasaki Street

Model	Year	Friction Plate each	Drive(Metal) Plate each	Spring Set	Gasket each
ZG1200B5-B17 Voyager XII	91-03	12-4040-(9)	——— (6)	614-405 (6)	643-4051
		———	——— (2)	———	———
KZ1300A1/A2/A3	79-81	12-4032 (9)	13-4006 (8)	614-401(5)	———
KZ1300A4	1982	12-4032 (7)	13-4006 (1)	614-401(5)	———
KZ1300B2 Touring	1980	12-4032 (9)	13-4006 (8)	614-401(5)	———
ZN1300A1-A6 Voyager	83-88	12-4044 (8)	13-4020 (6)	614-401(5)	———
		———	13-4019 (1)	———	———
VN1500A1-A9 Vulcan 88	87-95	12-4044 (8)	——— (7)	——— (10)	———
VN1500A10-A13 Vulcan	96-99	12-4044 (8)	——— (7)	——— (10)	———
VN1500B1-B4 Vulcan 88 SE	87-90	12-4044 (8)	——— (7)	——— (10)	———
VN1500C3/C4 1500L	96-97	12-4044 (8)	——— (7)	——— (10)	———
VN1500D1/D2 Classic	96-97	12-4044 (8)	——— (7)	——— (10)	———
VN1500E1-E7 Classic	98-04	12-4044 (8)	——— (7)	——— (10)	———
VN1500G1-G3 Nomad	99-01	12-4044 (8)	——— (7)	——— (10)	———
VN1500J1/J2 Drifter	99-00	12-4044 (8)	——— (7)	——— (10)	———
VN1500L1-L5 Nomad F.I.	00-04	12-4044 (8)	——— (7)	——— (10)	———
VN1500N1-N3 Classic F.I.	00-02	12-4044 (8)	——— (7)	——— (10)	———
VN1500N4 Classic F.I.	2005	12-4044 (8)	——— (7)	——— (10)	———
VN1500N6F Vulcan Classic	2006	12-4044 (8)	——— (7)	——— (10)	———
VN1500P Mean Streak	02-03	12-4044 (8)	——— (7)	——— (10)	———
VN1500R1-R5 Drifter	00-05	12-4044 (8)	——— (7)	——— (10)	———
VN1500T6F Vulcan Classic	2006	12-4044 (8)	——— (7)	——— (10)	———
VN1600A1-A6F Classic	03-06	12-4044 (8)	13-4051 (7)	——— (10)	———
VN1600B Mean Streak	04-05	12-4044 (8)	13-4051 (7)	——— (10)	———
VN1600D1/D6F Nomad	05-06	12-4044 (8)	13-4051 (7)	——— (10)	———
VN1600E6F	2006	12-4044 (8)	13-4051 (7)	——— (10)	———
VN1600F6F	2006	12-4044 (8)	13-4051 (7)	——— (10)	———
VN2000A1/A2 Vulcan 2000	04-05	12-4044 (10)	13-4051 (9)	——— (6)	———
VN2000A6F Vulcan 2000	2006	12-4044 (10)	13-4051 (9)	——— (6)	———
VN2000D1/D6F Limited	05-06	12-4044 (10)	13-4051 (9)	——— (6)	———
VN2000D7F Classic LT	2007	12-4044 (10)	13-4051 (9)	——— (6)	———

Kawasaki ATV

KLF110A1/A2 Mojave 110	87-88	12-1004 (3)	——— (4)	———	———
KLF110B1/B2 Mojave 110	87-88	12-1004 (3)	——— (4)	———	———
KLT110A1/A2/A3	84-86	12-1004 (3)	——— (4)	———	———
KLT160A1	1985	12-1019 (5)	13-4014 (4)	614-421 (4)	———
KLF185A1-A4 Bayou	85-88	12-1019 (5)	13-4014 (4)	614-421 (4)	———
KLT185A1/A2	86-87	12-1019 (5)	13-4014 (4)	614-421 (4)	———
KLT200A1-A4A	81-83	12-4049 (7)	13-4002 (6)	614-406 (5)	———
KLT200B1	1983	12-4049 (7)	13-4002 (6)	614-406 (5)	———
KL200C1/C2	83-84	12-4049 (7)	13-4002 (6)	614-406 (5)	———
KLF220A1-A15 Bayou 220	88-02	12-1042/2 (5)	13-4031 (4)	614-430 (4)	643-4042
KLF250A1-A7F Bayou 250	03-07	12-1042/2 (5)	13-4031 (4)	614-430 (4)	643-4042
KLT250A1/A2	82-83	12-4049 (7)	13-4002 (6)	614-406 (5)	———
KLT250C1/C2/C3 Prairie	83-85	12-4049 (7)	13-4002 (6)	614-406 (5)	———
KLT250P1 Police	1984	12-4049 (7)	13-4002 (6)	614-406 (5)	———
KSF250A1-A17 Mojave	87-03	12-4049 (7)	13-4002 (6)	614-406 (5)	643-4040
KSF250A18 KXF250 Mojave	2004	12-4049 (7)	13-4002 (6)	614-406 (5)	643-4040
KXF250A1/A2 Tecate 4	87-88	12-4059 (8)	13-4033 (7)	614-411 (6)	———
KXT250A1 Tecate 3	1984	12-1061/4 (7)	13-4013 (6)	614-412 (5)	643-4012
KXT250A2 Tecate 3	1985	12-1061/5 (7)	13-4013 (6)	614-407 (5)	643-4012
KXT250B1/B2 Tecate 3	86-87	——— (8)	13-4013 (7)	614-407 (5)	643-4030
KEF300A1-A7 Lakota 300	95-01	12-1061/4 (5)	13-4008 (4)	614-426 (4)	643-4036
KEF300B1/B2/B3 Lakota	01-03	12-1061/4 (5)	13-4008 (4)	614-426 (4)	643-4036
KLF300A1/A2 Bayou	86-87	12-1061/4 (5)	13-4008 (4)	614-426 (4)	643-4036
KLF300B1-B17 Bayou 300	88-04	12-1061/4 (5)	13-4008 (4)	614-426 (4)	643-4036
KLF300C1-C15 300 4x4	89-03	12-1061/4 (5)	13-4008 (4)	614-426 (4)	643-4043
KLF400B1-B7 Bayou 4x4	93-99	12-1061/4 (5)	13-4045 (5)	614-426 (4)	———
KSF400A1/A2 KFX400	03-04	——— (7)	13-3031 (7)	——— (8)	———
		——— (1)	———	———	———
KSF400A3/A6F KFX400	05-06	——— (8)	13-3031 (8)	——— (8)	———
		——— (1)	———	———	———

Kawasaki Dual Sport & Offroad

Model	Year	Friction Plate each	Drive(Metal) Plate each	Spring Set	Gasket each
KDX50A1/A2/A3	03-06	12-3004 (2)	——— (3)	——— (3)	———
KX60A1/A2	83-84	12-4038 (5)	13-4012 (4)	614-419 (6)	643-4020
KX60B1-B19	85-03	12-4038 (5)	13-4012 (4)	614-419 (6)	643-4020
KX65A1-A7F	00-07	12-4038 (5)	13-4048 (4)	——— (6)	———
KD80A/A2	75-76	12-4038 (4)	13-4012 (3)	614-417 (6)	———
KD80M1-M8	80-87	12-4038 (4)	13-4012 (3)	614-417 (6)	———
KD80N1/N2/N3	88-90	12-4038 (4)	13-4012 (3)	614-419 (6)	———
KDX80A1/A2	80-81	12-4038 (4)	13-4012 (3)	614-419 (6)	———
KDX80B2/B3	82-83	12-4038 (5)	13-4012 (4)	614-419 (6)	643-4020
KDX80C1/C2/C3/C4/C5	84-88	12-4038 (5)	13-4012 (4)	614-419 (6)	643-4020
KX80A1/A2	79-80	12-4038 (4)	13-4012 (3)	614-419 (6)	———
KX80C1/C2/	81-82	12-4038 (5)	13-4012 (4)	614-419 (6)	643-4020
KX80E1/E2	83-84	12-4038 (5)	13-4012 (4)	614-419 (6)	643-4020
KX80E3	1985	12-4038 (6)	13-4012 (5)	614-414 (5)	643-4020
KX80G1/G2	86-87	12-4038 (6)	13-4012 (5)	614-414 (5)	643-4032
KX80J2	1987	12-4038 (6)	13-4012 (5)	614-414 (5)	643-4032
KX80L1/L2/L3	88-90	12-4060 (7)	13-4012 (6)	——— (5)	643-4032
KX80N1/N2/N3	88-90	12-4060 (7)	13-4012 (6)	——— (5)	643-4032
KX80R1-R7	91-97	12-4060 (7)	13-4012 (5)	——— (5)	643-4032
KX80T1/T2/T3/T4	91-94	12-4060 (7)	13-4012 (5)	——— (5)	643-4032
KX80W1/W2/W3	98-00	12-1019 (6)	13-4047 (5)	——— (4)	643-4032(I)
KX85A1-A7F	01-07	12-1019 (6)	13-4047 (5)	——— (4)	643-4032(I)
G3TR-90 Bushmaster	69-70	12-4038 (4)	13-4012 (3)	614-417 (6)	———
MC1/MC1A/MC1B-90	73-75	12-4038 (4)	13-4012 (3)	614-417 (6)	———
MC1M/MC1MA-90	74-75	12-4038 (4)	13-4012 (3)	614-417 (6)	———
G31M/G31M A100	70-71	12-4038 (4)	13-4012 (3)	614-417 (6)	———
G4TR-100 Trail Boss	1970	12-4038 (4)	13-4012 (3)	614-417 (6)	———
G4TRA/B/C/D/E 100	71-75	12-4038 (4)	13-4012 (3)	614-417 (6)	———
G5/G5A/B/C-100	72-75	12-4038 (4)	13-4012 (3)	614-417 (6)	———
KD100M1/M2/M3/M4	76-79	12-4038 (4)	13-4012 (3)	614-417 (6)	———
KE100A5-A10	76-81	12-4038 (4)	13-4012 (3)	614-417 (6)	———
KE100B1-B20	82-01	12-4038 (4)	13-4012 (3)	614-417 (6)	———
KM100A1-A7	76-80	12-4038 (4)	13-4012 (3)	614-417 (6)	———
KV100A7	1976	12-4038 (4)	13-4012 (3)	614-417 (6)	———
KX100B5/B6/B7	95-97	12-4060 (7)	13-4012 (5)	——— (5)	643-4032
KX100C1/C2/C3	98-00	12-1019 (6)	13-4047 (5)	——— (4)	643-4032(I)
KX100D1-D7F	01-07	12-1019 (6)	13-4047 (5)	——— (4)	643-4032(I)
F6/A/B-125 Enduro	71-73	12-4041 (5)	13-4001 (4)	——— (5)	———
KD125/A2/A3/A4/A5	75-79	12-4041 (5)	13-4001 (4)	614-414 (5)	———
KS125/A	74-75	12-4041 (5)	13-4001 (4)	614-414 (5)	———
KE125A3-A10	76-83	12-4041 (5)	13-4001 (4)	614-414 (5)	———
KX125/A/A3	74-76	12-4041 (5)	13-4001 (4)	——— (5)	———
KX125A4/A5	78-79	12-4041 (6)	——— (4)	614-410 (6)	———
KX125A6	1980	12-4041 (6)	13-4001 (5)	614-410 (6)	———
KX125A7	1981	12-4041 (6)	——— (5)	614-410 (6)	———
KX125B1	1982	12-4041 (6)	——— (5)	614-410 (6)	———
KX125B2	1983	12-4041 (7)	13-4001 (6)	614-410 (6)	———
KX125C1	1984	12-4041 (7)	——— (6)	614-410 (6)	———
KX125D1/E1/E2	85-87	12-4058 (7)	13-4040 (6)	614-410 (6)	———
KX125F1/G1	88-89	12-4058 (8)	13-4040 (6)	614-415 (5)	643-4046(I)
KX125H1/H2	90-91	12-4058 (8)	13-4040 (7)	614-415 (5)	643-4046(I)
KX125J1	1992	12-4058 (8)	13-4040 (6)	614-415 (5)	———
KX125J2	1993	12-4058 (6)	13-4044 (7)	614-415 (5)	———
		12-4064 (2)	———	———	———
KX125K1/K2/K3	94-96	12-4063 (7)	13-4002 (6)	614-430 (4)	643-4055(I)
KX125K4/K5	97-98	12-4063 (5)	13-4002 (6)	614-433 (4)	643-4055(I)
		12-4049 (2)	———	———	———
KX125L1/L2/L3/L4	99-02	12-4063 (5)	13-4002 (6)	614-433 (4)	643-4055(I)
		12-4049 (2)	———	———	643-4055(I)
KX125M1/M2/M3	03-05	12-4063 (5)	13-4002 (6)	——— (5)	———
		12-4049 (2)	———	———	———
F7A/B/C/D-175 Enduro	71-75	12-4041 (5)	13-4001 (5)	———	———
KD175A1/A2/A3/A4	76-79	12-4041 (5)	13-4001 (4)	———	———
KDX175A1/A2/A3	80-82	12-4041 (6)	13-4001 (5)	614-410 (6)	———
KE175B1/B2/B3	76-78	12-4041 (5)	13-4001 (4)	614-413 (6)	———
KE175D2/D3/D4/D5	80-83	12-4041 (5)	13-4001 (4)	614-413 (6)	———
KDX200A1/A2/A3	83-85	12-4041 (7)	——— (6)	614-410 (6)	———
KDX200C1/C2/C3	86-88	12-4058 (7)	13-4026 (6)	614-410 (6)	643-4037
KDX200E1-E6	89-94	12-4058 (8)	13-4026 (7)	614-401 (5)	643-4037(I)
KDX200H1-H11	95-05	12-1034 (8)	13-4031 (7)	614-430 (4)	643-4037(I)
KDX200H6F	2006	12-1034 (8)	13-4031 (7)	614-430 (4)	643-4037(I)

Clutch Plates, Clutch Springs, & Clutch Cover Gasket

Kawasaki Dual Sport & Offroad

Model	Year	Friction Plate each	Drive(Metal) Plate each	Spring Set	Gasket each
KDX220A4-A12	97-05	12-1034 (8)	13-4031 (7)	614-430 (4)	643-4037(I)
KDX250A1/B1	80-81	12-1061/4 (6)	— (5)	614-412 (5)	—
KDX250B2/B3/B4	82-84	12-1061/4 (7)	13-4012 (6)	614-412 (5)	—
KDX250D1/D2/D3/D4	91-94	12-4059 (8)	13-4045 (7)	— (6)	—
KE250B1/B2/B3	77-79	12-1061/4 (6)	13-4008 (5)	614-415 (5)	—
KL250A1-A5	78-82	12-4049 (7)	13-4002 (6)	— (5)	—
KL250C1/C2	83-84	12-4049 (7)	13-4002 (6)	614-406 (5)	—
KL250D2-D22 KLR250	85-05	12-4049 (5)	13-4028 (5)	614-406 (5)	—
KL250G4-G7 Super Sherpa	00-03	12-4058 (7)	13-4044 (5)	— (6)	—
		—	13-4038 (1)	—	—
KLX250H6F KLX250S	2006	12-4058 (7)	13-4044 (5)	— (6)	—
		—	13-4038 (1)	—	—
KLX250A1/A2	79-80	12-4049 (7)	13-4002 (6)	614-405 (5)	—
KT250A/A2 Trials	75-76	12-4041 (5)	13-4001 (4)	614-410 (6)	—
KX250/A/A3	74-76	— (5)	— (4)	614-422 (6)	—
KX250A4/A5	78-79	12-1061/4 (5)	— (4)	614-422 (6)	—
KX250A6/A7	80-81	12-1061/4 (6)	— (5)	614-412 (5)	—
KX250B1	1982	12-1061/4 (7)	13-4013 (6)	614-412 (5)	—
KX250C1	1983	12-1061/4 (7)	13-4013 (6)	614-412 (5)	—
KX250C2	1984	— (7)	13-4013 (6)	614-412 (5)	—
KX250D1	1985	— (8)	13-4013 (7)	614-412 (5)	643-4030
KX250D2	1986	12-4059 (8)	13-4033 (7)	614-407 (5)	643-4030
KX250E1	1987	12-4059 (8)	13-4033 (7)	614-411 (6)	643-4049(I)
KX250F1	1988	12-4059 (8)	13-4033 (7)	614-411 (6)	643-4049(I)
KX250G1	1989	12-4059 (8)	13-4033 (7)	— (6)	643-4049(I)
KX250H1	1990	12-4059 (8)	13-4033 (7)	— (6)	643-4049(I)
KX250H2	1991	12-4059 (8)	13-4045 (7)	— (6)	643-4049(I)
KX250J1/J2	92-93	12-4040 (8)	13-4022 (7)	614-401 (5)	—
KX250K1/K2/K3	94-96	12-4040 (8)	13-4022 (7)	614-401 (5)	643-4056(I)
		—	—	—	643-4057(O)
KX250K4/K5	97-98	12-4040 (8)	13-4022 (7)	614-401 (5)	643-4056(I)
		—	—	—	643-4057(O)
KX250L1/L2/L3/L4	99-02	12-4040 (8)	13-4022 (7)	614-401 (5)	643-4056(I)
		—	—	—	643-4057(O)
KX250M1/M2	03-04	12-4040 (8)	13-4022 (7)	614-401 (5)	643-4056(I)
		—	—	—	643-4057(O)
KX250R1/R6F/R7F	05-07	12-4040 (8)	13-4022 (7)	— (5)	—
KLX300A2-A10	97-05	12-4058 (7)	13-4044 (5)	— (6)	—
		—	13-4038 (1)	—	—
KLX300A6F/A7F	06-07	12-4058 (7)	13-4044(5)	— (6)	—
		—	13-4038 (1)	—	—
KDX400A1/A2	79-80	12-1061/4 (6)	— (5)	614-411 (6)	—
KLX400A1 KLX400SR	2003	— (7)	13-4059 (7)	— (6)	—
		— (1)	—	—	—
KLX400B1 KLX400R	2003	— (7)	13-4059 (7)	— (6)	—
		— (1)	—	—	—
KDX420B1	1981	12-1061/4 (6)	— (5)	614-411 (6)	—
KX420A1/A2	80-81	12-1061/4 (6)	— (5)	614-411 (6)	—
KDX450A1	1982	12-1061/4 (6)	— (5)	614-411 (6)	—
KX450D6F/D7F	06-07	12-1054 (8)	13-4045 (7)	— (5)	—
KX500A1/A2	83-84	12-1061/4 (7)	13-4013 (6)	614-401 (5)	—
KX500B1	1985	— (8)	13-4013 (7)	614-401 (5)	—
KX500B2	1986	— (8)	13-4013 (7)	614-401 (5)	643-4034
KX500C1	1987	12-4059 (8)	13-4033 (7)	— (6)	643-4034
KX500D1	1988	12-4059 (8)	13-4033 (7)	— (6)	643-4034
KX500E1-E16	89-04	12-4059 (8)	13-4033 (7)	— (6)	643-4034
KL600A1 KLR600	1984	12-4040 (7)	13-4004 (6)	614-407 (5)	643-4013
KL600B1/B2 KLR600	85-86	12-4040 (7)	13-4004 (6)	614-412 (5)	643-4013
KL650A1-A9 KLR650	87-95	12-4040 (7)	13-4024 (6)	614-412 (5)	643-4013
KL650A10-A19 KLR650	96-05	12-4040 (8)	13-4024 (7)	614-401 (5)	643-4013
KL650A6F/A7F KLR650	06-07	12-4040 (8)	13-4024 (7)	614-401 (5)	643-4013
KL650B2/B3 Tengai	90-91	12-4040 (7)	13-4024 (6)	614-412 (5)	643-4013
KLX650A1/A2/A3	93-95	12-4040 (7)	13-4024 (6)	614-412 (5)	—
KLX650C1-C4 Dual	93-96	12-4040 (7)	13-4024 (6)	614-412 (5)	—
KLX650D1 KLX650R	1996	12-4040 (7)	13-4024 (6)	614-412 (5)	—

Suzuki Street

Model	Year	Friction Plate each	Drive(Metal) Plate each	Spring Set	Gasket each
SP100D Dual Sport	1983	12-3029 (5)	13-3003 (4)	614-318 (5)	—
GN125Z/D	82-83	12-3029 (5)	13-3003 (4)	614-318 (5)	—
GN125EM-EV	91-97	12-3029 (5)	13-3003 (4)	614-318 (5)	—
SP125Z/D Dual Sport	82-83	12-3029 (5)	13-3003 (4)	614-318 (5)	—
SP125G/H/J Dual Sport	86-88	12-3029 (5)	13-3003 (4)	614-318 (5)	—
GT185K/L/M/A/B	73-77	12-3029 (6)	13-3003 (5)	614-312 (7)	—
SP200G/H/J Dual Sport	86-88	12-3029 (6)	13-3003 (5)	614-318 (5)	—
		12-3029 (2)	—	—	—
GN250Z/D	82-83	12-3039 (4)	— (4)	— (4)	—
		12-3041 (1)	—	—	—
GN250F	1985	12-3039 (4)	— (4)	— (4)	—
		12-3041 (1)	—	—	—
GN250J	1988	12-3039 (4)	— (4)	— (4)	—
		12-3041 (1)	—	—	—
GS250TT/TX	80-81	12-3029 (7)	13-3003 (6)	614-309 (5)	—
GT250	76-77			614-301 (6)	—
GZ250X/Y/K1-K5 Marauder	99-05	12-3039 (4)	— (4)	— (4)	—
		12-3051 (1)	—	—	—
GS300LZ/LD	82-83	12-3029/2 (8)	— (7)	614-318 (5)	—
GS300LF	1985	12-3029/2 (8)	— (7)	614-318 (5)	—
GN400T/XT/XX/TX/TZ	80-82	12-3039 (6)	13-3004 (5)	614-305 (6)	
GS400B/XB/C/XC	77-78	12-3041/2 (6)	13-3004 (5)	614-301 (6)	—
		—	— (1)	—	—
GSF400M/N/P Bandit	91-93	12-3061 (6)	13-3003 (7)	614-318 (5)	
		12-3029 (1)	—	—	—
GS425N/EN	1979	12-3041/2 (6)	13-3004 (5)	614-306 (6)	—
		— (1)	—	—	
GS425LN	1979	12-3041/2 (6)	13-3004 (5)	614-306 (6)	—
		—	— (1)	—	—
GS450ET/EX/EZ/ED	80-83	12-3039 (7)	13-3004 (6)	614-305 (6)	643-3006
GS450LT/LX/LZ/LD	80-83	12-3039 (7)	13-3004 (6)	614-305 (6)	643-3006
GS450LF/LG/LH/LJ	85-88	12-3039 (7)	13-3004 (6)	614-305 (6)	643-3006
GS450ST/SX	80-81	12-3039 (7)	13-3004 (6)	614-305 (6)	643-3006
GS450TX/TZ/TXZ/TXD	81-83	12-3039 (7)	13-3004 (6)	614-305 (6)	643-3006
GS500EK-EK2	89-02	12-3039 (7)	13-3004 (6)	614-323 (6)	643-3006
GS500FK4/FK5/FK6/FK7	04-07	12-3039 (7)	13-3004 (6)	614-323 (6)	643-3006
GS550B/C/EC/N/EN	77-79	12-3041/2 (7)	13-3004 (6)	614-301 (6)	—
GS550ET	1980	12-3041/2 (7)	13-3004 (6)	614-301 (6)	—
GS550ED/ESD	1983	12-3041/2 (7)	13-3004 (6)	614-301 (6)	—
		—	— (1)	—	—
GS550ES3-ESG	83-86	12-3041/2 (7)	13-3004 (6)	614-301 (6)	—
		—	— (1)	—	—
GS550LN/LT/LX/LZ	79-82	12-3041/2 (7)	13-3004 (6)	614-301 (6)	—
GS550LD	1983	12-3041/2 (7)	13-3004 (6)	614-301 (6)	—
		—	— (1)	—	—
GS550LF/LG	85-86	12-3041/2 (7)	13-3004 (6)	614-301 (6)	—
		—	— (1)	—	—
GS550MZ Katana	1982	12-3041/2 (7)	13-3004 (6)	614-301 (6)	—
GS550TX	1981	12-3041/2 (7)	13-3004 (6)	614-301 (6)	—
GSF600ST-SK3 Bandit	96-03	12-3039 (8)	— (7)	614-328 (4)	643-3039
GSX600FJ-FM Katana	88-91	12-3039 (8)	— (7)	614-330 (4)	643-3039
GSX600FP-FV Katana	92-97	12-3063 (8)	13-3001 (9)	614-324 (6)	643-3039
GSX600FW-FK6 Katana	98-06	12-3039 (7)	— (7)	614-328 (4)	643-3039
		12-3051 (1)	—	—	—
GSX-R600WN/WP	92-93	12-3063 (8)	13-3002 (7)	614-324 (6)	643-3070
GSX-R600V/W	97-98	12-1042/2 (8)	13-3005 (7)	—	—
		12-1034 (1)	13-3028 (1)	—	—
GSX-R600X/Y	99-00	12-1042/2 (8)	— (8)	—	—
		12-1034 (1)	— (1)	—	—
GSX-R600K1/K2/K3	01-03	12-1042/2 (8)	13-3039 (7)	— (5)	—
		12-1034 (1)	13-3038 (1)	—	—
GSX-R600K4/K5	04-05	12-1042/2 (8)	—	— (5)	—
		12-1034 (1)	—	—	—
GSX-R600K6/K7	06-07	12-4063 (7)	— (6)	— (6)	—
		— (1)	13-3047 (1)	—	—
RF600RR/RS/RT	94-96	12-3063 (7)	13-3002 (6)	614-324 (6)	643-3070
		—	13-3001 (1)	—	—
GR650D/XD Tempter	1983	12-3039 (7)	— (5)	614-313 (4)	—
		12-3051 (1)	—	—	—

Clutch Plates, Clutch Springs, & Clutch Cover Gasket

Suzuki Street

Model	Year	Friction Plate each	Drive (Metal) Plate each	Spring Set	Gasket each
GS650EX/EZ	81-82	12-3041 (8)	— (8)	614-301(6)	—
GS650GX/GZ/GD	81-83	12-3041 (8)	— (8)	614-301(6)	—
GS650GLX/GLZ/GLD	81-83	12-3041 (8)	— (8)	614-301(6)	—
GS650MD Katana	1983	12-3041 (8)	— (8)	614-301(6)	—
LS650FG/FH Savage	86-87	12-3039 (5)	— (5)	614-330(4)	—
		12-3051 (1)	—	—	—
LS650PG/PH PJ Savage	86-88	12-3039 (5)	— (5)	614-330(4)	—
		12-3051 (1)	—	—	—
LS650PS-PK4 Savage	95-04	12-3039 (5)	13-3004 (6)	614-330(4)	—
		12-3051 (1)	—	—	—
SV650X/Y/K1/K2	99-02	12-3039 (5)	13-3004 (6)	— (6)	—
		12-3051 (1)	—	—	—
SV650650K3/K4/K5/K6	03-06	— (6)	13-3004 (6)	—	—
		— (1)	—	—	—
SV650SX/SY/SK1/SK2	99-02	12-3039 (5)	13-3004 (6)	— (6)	—
		12-3051 (1)	—	—	—
SV650SK3/SK4/SK5/SK6	03-06	— (6)	13-3004 (6)	—	—
		— (1)	—	—	—
XN85D Turbo	1983	12-3041 (9)	13-3004 (8)	614-305 (6)	—
GS700EF/ESF	1985	12-3041 (8)	— (8)	614-313 (4)	643-3016
GV700GLF/GLF2 Madura	1985	12-3039/3 (8)	— (8)	614-313(4)	—
VS700GLFG/GLFH Intruder	86-87	12-3039 (6)	— (6)	614-313(4)	—
		12-3051 (1)	—	—	—
GS750B/C/EC/N/EN	77-79	12-3041/2(8)	13-3004 (7)	614-303(6)	643-3001
GS750ET/EX/EZ	80-82	12-3041 (8)	— (8)	614-303(6)	643-3007
GS750ED/ESD	1983	12-3041 (8)	— (8)	614-321(4)	643-3016
GS750LN	1979	12-3041/2(8)	13-3004 (7)	614-303 (6)	643-3001
GS750LT/LX	80-81	12-3041 (8)	— (8)	614-303(6)	643-3007
GS750SD Katana	1983	12-3041 (8)	— (8)	614-303(6)	643-3007
GS750TZ/TD	82-83	12-3041 (8)	— (8)	614-303(6)	643-3007
GSX750FK-FV Katana	89-97	12-3063 (8)	13-3001 (9)	— (4)	643-3039
GSX750FW-FK6 Katana	98-06	12-3039 (7)	— (7)	614-328(4)	643-3039
		12-3051 (1)	—	—	—
GSX-R750G/H	86-87	12-3039 (8)	— (7)	614-313 (4)	643-3039
GSX-R750J/K	88-89	12-3063 (8)	13-3001 (9)	— (4)	643-3039
GSX-R750L/M/N	90-92	12-3063 (8)	13-3001 (9)	614-324(6)	643-3039
GSX-R750WP/WR/WS	93-95	12-3063 (8)	13-3002 (7)	614-324(6)	643-3070
GSX-R750T/V/W/X	96-99	12-1042/2(9)	13-3005 (7)	—	—
		12-1034 (1)	13-3028 (2)	—	—
GSX-R750Y/K1	00-01	12-1042/2(10)	— (7)	— (5)	—
		— (2)	—	—	—
GSX-R750K2/K3/K4/K5	02-05	12-1042/2(9)	— (2)	—	—
		12-1034 (1)	— (7)	—	—
GSX-R750K6/K7	06-07	12-4063 (8)	— (6)	— (6)	—
		— (1)	— (1)	—	—
GT750M/A/B Lemans	75-77	12-3041/2 (8)	— (7)	614-303 (6)	—
VS750GLPJ-GLPM Intruder	88-91	12-3039 (6)	— (6)	614-321(4)	643-3065
		12-3051 (1)	—	—	—
VS800GLN-GLK4 Intruder	92-04	12-3039 (6)	— (6)	614-321(4)	643-3065
		12-3051 (1)	—	—	—
VS800 Boulevard S50	05-06	—	—	—	643-3065
VX800L/M/N/P	90-93	12-3039 (6)	— (6)	—	643-3065
		12-3051 (1)	—	—	—
VZ800V-K3 Marauder	97-04	12-3039 (6)	— (6)	—	—
		12-3051 (1)	—	—	—
GS850GN/GT/GX	79-81	12-3041 (8)	— (8)	614-306 (6)	643-3001
GS850GZ/GD	82-83	12-3041 (8)	— (8)	614-306(6)	643-3009
GS850GLT	1980	12-3041 (8)	— (8)	614-306(6)	643-3001
GS850GLX/GLZ/GLD	81-83	12-3041 (8)	— (8)	614-306(6)	643-3009
RF900RR	1994	12-3052 (10)	13-3009 (10)	—	—
		— (1)	—	—	—
RF900RS/RZS/RT/RV	95-97	12-1042/2(9)	— (7)	12-1034(1) (2)	
DL-1000K2-K6 V-Storm	02-06	12-4062 (8)	13-3036 (7)	— (5)	—
		12-4062/2(1)	13-3037 (2)	—	—
		— (1)	—	—	—
GS1000C/EC/N/EN/ET	78-80	12-2024/2(8)	13-3034 (7)	614-303(6)	643-3002
GS100GT/GLT/GX/GLX	80-81	12-3045 (9)	13-3010 (8)	614-306(6)	643-3009
GS1000LN	1979	12-2024/2 (8)	13-3010 (8)	614-303(6)	643-3009
GS1000SN/ST	79-80	12-2024/2(8)	13-3034 (7)	614-303(6)	643-3002
GS1000SZ Katana	1982	12-3045 (9)	13-3010 (8)	614-307(6)	643-3008
GSX-R1000K1/K2/K3/K4	01-04	12-4063 (10)	13-3040 (9)	— (5)	—

Suzuki Street

Model	Year	Friction Plate each	Drive (Metal) Plate each	Spring Set	Gasket each
GSX-R1000K5/K6	05-06	12-4063 (9)	13-3047 (9)	— (5)	—
		— (1)	—	—	—
SV1000K3/K4/K5	03-05	12-4062 (8)	13-3036 (7)	—	—
		12-4062/2 (1)	13-3037 (2)	—	—
		— (1)	—	—	—
SV1000SK3-SK7	03-07	12-4062 (8)	13-3036 (7)	—	—
		12-4062/2 (1)	13-3037 (2)	—	—
		— (1)	—	—	—
TL1000RW/RX/RY	98-00	12-3064 (8)	13-3041 (8)	— (6)	—
		12-3065 (1)	—	—	—
TL100RK1/RK2/RK3	01-03	12-3068 (9)	13-3042 (9)	— (6)	—
		12-3065 (1)	—	—	—
TL1000SV/SW	97-98	12-1042/2 (9)	13-3008 (7)	— (5)	—
		12-1034 (1)	13-3028 (2)	—	—
TL1000SX/SY/SK1	99-01	12-3064 (8)	13-3041 (8)	— (6)	—
		12-3065 (1)	—	—	—
GS1100ET/EX/EZ	80-82	12-3045 (9)	13-3010 (8)	614-303 (6)	643-3008
GS1100ED/ESD	1983	— (10)	13-3010 (11)	614-307 (6)	643-3008
GS1100GZ/GD	82-83	12-3045 (9)	13-3010 (8)	614-305 (6)	643-3009
GS1100GLZ/GLD	82-83	12-3045 (9)	13-3010 (8)	614-305 (6)	643-3009
GS1100GKZ/GK2/GKD/GKE	82-84	12-3045 (9)	13-3010 (8)	614-305 (6)	643-3009
GS1100LT	1980	12-3045 (9)	13-3010 (8)	614-303 (6)	643-3008
GS1100SD	1983	— (10)	13-3010 (11)	614-307 (6)	643-3008
GSX1100FJ-FP Katana	88-93	12-3052 (11)	13-3010 (10)	—	643-3039
GSX2200GM/GN/GP Shaft	91-93	12-3052 (10)	13-3009 (10)	—	643-3039
GSX-R1100G/H/J	86-88	12-3052 (11)	13-3009 (10)	—	643-3039
GSX-R1100K/L/M/N	89-92	12-3052 (10)	13-3009 (10)	614-321 (4)	643-3039
GSX-R1100WP-WW	93-98	12-3052 (10)	13-3009 (10)	—	643-3070
		— (1)	—	—	—
GS1150ES3-ESG	83-86	12-3045 (9)	13-3010 (8)	614-307 (6)	643-3008
GSF1200SV-SK6 Bandit	97-06	12-1042/2(9)	13-3005 (7)	—	643-3039
		12-1034 (1)	13-3028 (2)	—	—
GSf1200SAV Bandit	1997	12-1042/2 (9)	13-3005 (7)	—	643-3039
		12-1034 (1)	13-3028 (2)	—	—
GV1200GLF/GLG Madura	85-86	12-1039 (9)	— (9)	614-313(4)	—
		12-3051 (1)	—	—	—
GV1200GLF2 Madura	1985	12-3039 (9)	—	614-313 (4	—
		12-3051 (1)	—	—	—
GSX1300R Hayabusa	99-01	12-4062 (8)	13-3036 (7)	— (6)	—
		12-4062/2 (2)	13-3037 (2)	—	—
GSX1300R Hayabusa	02-06	12-4062 (8)	13-3036 (7)	— (6)	—
		12-4062/2 (1)	13-3037 (2)	—	—
		— (1)	—	—	—
GSX1300RZK Hayabusa	04-06	12-4062 (8)	13-3036 (7)	— (6)	—
		12-4062/2 (1)	13-3037 (2)	—	—
		— (1)	—	—	—
GV1400GCG/GCH	86-87	12-3039/3 (10)	—	— (4)	—
Cavalcade		12-3051 (1)	—	—	—
GV1400GDG-GDJ	86-88	12-3039/3 (10)	—	— (4)	—
		12-3051 (1)	—	—	—
GV1400GTG/GTH	86-87	12-3039/3 (10)	—	— (4)	—
Calvacade		12-3051 (1)	—	—	—
VS1400GLFH Intruder	1987	12-3039/3 (9)	—	—	643-3066
		12-3051 (1)	—	—	—
VS1400GLP Intruder	87-88	12-3039/3 (9)	—	—	643-3066
		12-3051 (1)	—	—	—
VS1400GLP Intruder	90-04	12-3039/3 (9)	—	—	643-3066
		12-3051 (1)	—	—	—
VS1400 Boulevard S83	05-06	12-3039/3 (9)	—	—	643-3066
		12-3051 (1)	—	—	—
VL1500W-K4 Intruder LC	98-04	12-3045 (9)	13-3034 (8)	— (5)	643-3066
VL1500LC Boulevard C90	05-06	12-3045 (9)	—	— (5)	643-3066
VZ1600K4 Marauder	2004	12-4044 (8)	—	— (10)	—
VZ1600 Boulevard M95	2005	12-4044 (8)	—	— (10)	—

Clutch Plates, Clutch Springs, & Clutch Cover Gasket

Suzuki ATV

Model	Year	Friction Plate each	Drive(Metal) Plate each	Spring Set	Gasket each
ALT125D/E/F/G	83-86	12-3029 (3)	— (2)	—	—
LT125D/E/F/G/H	83-87	12-3029 (3)	— (2)	—	—
LT160E Quadrunner	89-92	12-3029/2 (6)	— (5)	— (4)	643-3033
LT-F160M-K1 Quadrunner	91-01	12-3029/2 (6)	— (5)	— (4)	643-3033
LT-F160K3/K4 Quadrunner	03-04	12-3029/2 (6)	— (5)	— (4)	643-3033
ALT185F	1985	12-3029 (3)	— (2)	—	—
LT185E/F/G/H	84-87	12-3029 (3)	— (2)	—	—
LT230E	87-93	12-3029/2 (6)	— (5)	614-316 (4)	643-3033
LT230GEF/GEG	85-86	12-3029/2 (6)	— (5)	614-316 (4)	643-3033
LT230SF/SG/SH/SJ	85-88	12-3029/2 (6)	— (6)	614-318 (4)	643-3034
LT250EFF/EFG	85-86	12-3029/2 (7)	— (6)	— (4)	
LT250RF/RG Quadracer	85-86	12-3029 (6)	— (5)	614-318 (5)	643-3036
LT250RH-RN Quadracer	87-92	12-3039/3 (6)	— (5)	614-319 (6)	643-3060
LT250SK/SL Quadsport	89-90	12-3029 (7)	13-3003 (6)	614-318 (4)	—
LT-F250J/K/L/M/N/P	88-93	— (7)	— (6)	643-3040	
LT-F250R/S/T/V/W/X/Y/K1	94-01	— (7)	— (6)	643-3040	
LT-F250FX/FY/FK1/FK2	99-02	12-3029/2 (7)	— (6)	614-316 (4)	643-3040
LT-F250K2 Ozark 2WD	2002	12-3029/2 (6)	— (5)	614-316 (4)	—
LT-F250K3 Ozark 2WD	2003	12-3029/2 (7)	— (5)	614-316 (4)	—
LT-F250K4 Ozark 2WD	2004	12-3029/2 (5)	— (5)	614-316 (4)	—
		12-3029 (1)	—	—	—
LT-F250K5-K7 Ozark 2WD	05-07	12-3029/2 (7)	— (6)	614-316 (4)	—
LT-Z250K4-K7 Quadsport	04-07	12-3029/2 (5)	— (5)	614-316 (4)	—
		12-3029 (1)	—	—	—
LT-4WDH/J/K/L/M/N/P	87-93	12-3029/2 (7)	— (6)	614-316 (4)	643-3040
LT-4WDR/S/T/V/W	94-98	12-3029/2 (7)	— (6)	—	643-3040
Quadrunner 250		—	—	—	—
LT300EH/EJ/EK	87-89	12-3029/2 (7)	— (6)	— (4)	643-3035
LT-F300FX/FY/FK1/FK2	99-02	12-3029/2 (8)	— (7)	614-316 (4)	643-3040
King Quad		—	—	—	—
LT-F4WDXM/N/P/R/S	91-95	12-3029/2 (8)	— (7)	614-316 (4)	643-3040
King Quad 300		—	—	—	—
LT-F4WDXT/V/W	96-98	12-3029/2 (8)	— (7)	614-316 (4)	643-3040
King Quad 300		—	—	—	—
LT-F400K2/K3/K4	02-04	12-1061/4 (6)	13-3031 (5)	— (4)	—
Eiger 2WD		—	—	—	—
LT-F400FK2-FK7	02-07	12-1061/4 (6)	13-3031 (5)	— (4)	—
Eiger 4WD		—	—	—	—
LT-Z400K3/K4	03-04	— (7)	13-3031 (7)	— (6)	—
Quadsport Z400		— (1)	—	—	—
LT-Z400K5/K6/K7	05-07	— (8)	13-3031 (8)	— (6)	—
		— (1)	—	—	—
LT-R450K6/K7	06-07	— (8)	13-3048 (6)	— (6)	—
		—	13-3049 (1)	—	—
LT500R Quadracer	87-90	12-3039/3 (8)	— (7)	614-319 (6)	643-3067
LT-F500FW-FK2	98-02	12-1061/4 (6)	13-3031 (5)	— (4)	—
LT-F500FK3-FK7	03-07	— (6)	13-3031 (5)	— (4)	—
Vinson 4WD					

Suzuki Dual Sport & Offroad

Model	Year	Friction Plate each	Drive(Metal) Plate each	Spring Set	Gasket each
JR50C-K7	78-07	12-3004 (2)	— (3)	614-314 (3)	—
OR50N/T	79-80	12-3029 (3)	13-3003 (2)	614-308 (5)	—
RM50C/N/T	78-80	12-3029 (3)	13-3003 (2)	614-308 (5)	—
RM60N/T/X/Z/D	79-83	12-3029 (5)	13-3003 (4)	614-308 (5)	—
RM60K3	2003	12-4038 (5)	13-4012 (4)	614-419 (6)	643-4020
TS75M/A/B Colt	75-77	12-3021 (4)	— (4)	— (6)	—
DS80C/N/T/X/Z/D	78-83	12-3029 (4)	13-3003 (3)	614-308 (5)	—
DS80F-Y	85-00	12-3029 (4)	13-3003 (3)	614-308 (5)	—
RM80B	1977	12-3029 (4)	13-3003 (3)	614-308 (5)	—
RM80C/N/T/X	78-81	12-3029 (5)	13-3003 (4)	614-308 (5)	—
RM80Z	1982	12-3029 (4)	13-3003 (3)	614-309 (5)	—
RM80D	1983	12-3029 (4)	13-3003 (3)	614-318 (5)	—
RM80E/F	84-85	12-3029 (5)	13-3003 (4)	614-318 (5)	—
RM80G/H/J	86-88	12-3053 (5)	— (4)	614-320 (4)	—
RM80K/L/M/N/P/R/S/T	89-96	12-3029 (5)	— (4)	614-325 (5)	—
RM80V/W/X/Y/K1	97-01	12-3029 (5)	— (4)	614-325 (5)	—
RM85K2/K3/K4/K5/K6/K7	02-07	12-3029 (5)	— (4)	614-325 (5)	—
RM85LK2-LK7	02-07	12-3029 (5)	— (4)	614-325 (5)	—
DR100D/E/F/G/H/J/K/L	83-90	12-3029 (5)	13-3003 (4)	614-318 (5)	—
DS100C/N/T/X	78-81	12-3029 (5)	13-3003 (4)	614-312 (7)	—
RM100A	1976	12-3029 (6)	13-3003 (5)	614-312 (7)	—

Suzuki Dual Sport & Offroad

Model	Year	Friction Plate each	Drive(Metal) Plate each	Spring Set	Gasket each
RM100B/C	77-78	12-3029 (7)	13-3003 (6)	614-312 (7)	—
RM100N/T/X	79-81	12-3029 (6)	13-3003 (5)	— (7)	—
SP100D	1983	12-3029 (5)	13-3003 (4)	614-318 (5)	—
TC100K/L/M/A/B Blazer	73-77	12-3021 (6)	— (6)	— (6)	—
TM100L/M	74-75	12-3029 (6)	13-3003 (5)	— (7)	—
TS100K/L/M/A/B Honcho	73-77	12-3021 (6)	— (6)	— (7)	—
TS100C/N/T/X	78-81	12-3029 (5)	13-3003 (4)	614-312 (7)	—
DR125Z/D/E	82-84	12-3029 (5)	13-3003 (4)	614-318 (5)	—
DR125G/H/J	86-88	12-3029 (5)	13-3003 (4)	614-318 (5)	—
DR125SER/SES/SET	94-96	12-3029 (5)	13-3003 (4)	614-318 (5)	—
DS125N/T/X	79-81	12-3029 (5)	13-3003 (4)	614-312 (7)	—
RM125M	1975	12-3029 (6)	13-3003 (5)	614-312 (7)	—
RM125A/B/C	76-78	12-3029 (7)	13-3003 (6)	614-312 (7)	—
RM125N/T	79-80	12-3029 (6)	13-3003 (5)	— (7)	—
RM125X/Z	81-82	12-3029 (7)	13-3003 (6)	614-309 (5)	—
RM125D	1983	12-3029 (7)	13-3003 (6)	614-318 (5)	—
RM125E	1984	12-3029/2 (8)	— (7)	614-318 (5)	—
RM125F	1985	12-3029 (7)	13-3003 (6)	614-318 (5)	—
RM125G/H	86-87	12-3029 (6)	13-3003 (5)	— (5)	643-3044
RM125J	1988	12-3029/2 (8)	— (7)	— (5)	—
RM125K	1989	12-3029/2 (8)	— (7)	— (5)	—
RM125L/M	90-91	12-3029/2 (8)	— (7)	— (5)	643-3055(I)
RM125N	1992	12-3062 (8)	— (7)	614-327 (5)	643-3074(I)
RM125P/R/S/T/V	93-97	12-3062 (8)	— (7)	— (5)	643-3074(I)
RM125W/X/Y/K1/K2	98-02	12-3062 (8)	— (7)	— (5)	—
RM125K3/K4/K5/K6/K7	03-07	12-4063 (8)	— (7)	— (5)	—
RV125K/L/M/A/B	73-77	12-3029 (5)	13-3003 (4)	— (5)	—
SP125Z/D	82-83	12-3029 (5)	13-3003 (4)	614-318 (5)	—
SP125G/H/J	86-88	12-3029 (5)	13-3003 (4)	614-318 (5)	—
TC125J/K/L/M/A/B	72-77	12-3029 (5)	13-3003 (4)	— (7)	—
TM125K/L/M Challenger	73-75	12-3029 (6)	13-3003 (5)	— (7)	—
TS125R/J/K/L/M/A/B Duster	71-77	12-3029 (5)	13-3003 (4)	— (7)	—
TS125C/N	78-79	12-3029 (5)	13-3003 (4)	614-312 (7)	—
TS125T/X	80-81	12-3029 (4)	13-3003 (4)	614-312 (7)	—
		12-3061 (1)	— (1)	—	—
PE175C/N/	78-79	12-3029 (7)	13-3003 (6)	614-312 (7)	—
PE175T/X/Z/D/E	80-84	12-3029 (7)	13-3003 (6)	614-312 (7)	—
RS175T/X/Z	80-82	12-3029 (7)	13-3003 (6)	614-312 (7)	—
DS185C/N/T	78-80	12-3029 (6)	13-3003 (5)	614-312 (7)	—
TC185L/M/A/B Ranger	74-77	12-3029 (6)	13-3003 (5)	—	—
TS185R/J	71-72	12-3029 (6)	13-3003 (5)	—	—
TS185K/L/M/A Sierra	73-76	12-3029 (6)	13-3003 (5)	—	—
TS185B/C/N/T/X	77-81	12-3029 (6)	13-3003 (5)	614-312 (7)	—
DR200G/H/J	86-88	12-3029 (7)	13-3003 (5)	614-318 (5)	—
DR200SET-SEK7 Dual	96-07	12-3029(6)	— (6)	614-318 (5)	—
SP200G/H/J Dual Sport	86-88	12-3029 (6)	13-3003 (5)	614-318 (5)	—
DR250Z/D	82-83	12-3039 (4)	— (4)	614-313 (4)	—
		12-3051 (1)	—	—	—
DR250F	1985	12-3039 (4)	— (4)	614-313 (4)	—
		12-3051 (1)	—	—	—
DR250L/M/N/P	90-93	12-3039/3 (7)	13-3004(6)	614-319 (6)	—
DR250SL-SES Dual Sport	90-95	12-3039/3 (7)	13-3004 (6)	614-319 (6)	—
DR-Z250K1-K6	01-06	12-1042/2 (6)	13-3013 (6)	— (5)	—
		12-1034 (1)	—	—	—
DS250T	1980	12-3051 (6)	— (6)	614-301 (6)	—
PE250B/C/N	77-79	12-3051 (5)	— (5)	614-303 (6)	—
PE250T/X	80-81	12-3039 (5)	— (4)	614-303 (6)	—
RL250L/M	74-75	12-3051 (6)	— (6)	614-301 (6)	—
RM250A/B/C/C2	76-78	12-3051 (5)	— (5)	614-303 (6)	—
RM250N/T/X	79-81	12-3039 (5)	— (4)	614-303 (6)	—
RM250Z/D/E/F	82-85	12-3039 (5)	— (4)	614-303 (6)	—
RM250G	1986	12-3039/3 (6)	— (5)	614-319 (6)	643-3045
RM250H	1987	12-3039/3 (6)	— (5)	614-319 (6)	—
RM250J	1988	12-3039/3 (8)	13-3004 (7)	614-324 (6)	643-3058
RM250K	1989	12-3039/3 (8)	13-3004 (7)	614-324 (6)	643-3059
RM250L/M	90-91	12-3039 (8)	13-3004 (7)	614-324 (6)	643-3059 (I)
RM250N/P	92-93	12-3039/3 (9)	13-3004 (8)	614-326 (6)	643-3059 (I)
RM250R/S	94-95	12-3039/3 (8)	13-3004 (7)	614-326 (6)	643-3075 (I)
RM250T/V	96-97	12-4040 (8)	13-3035 (7)	614-326 (6)	—
RM250W/X/Y	98-00	12-4040 (8)	13-3035 (7)	614-306 (6)	—
RM250K1/K2	01-02	12-4040 (8)	13-3035 (7)	614-306 (6)	—

Clutch Plates, Clutch Springs, & Clutch Cover Gasket

Suzuki Dual Sport & Offroad

Model	Year	Friction Plate each	Drive (Metal) Plate each	Spring Set	Gasket each
RM250K3/K4/K5	03-05	(8)	13-3035 (7)	614-306 (6)	—
RM250K6/K7	06-07	(8)	13-3035 (7)	614-326 (6)	—
RM-Z250K4/K5/K6	04-06	12-4063 (8)	13-4002 (7)	—	—
RMX250K	1989	12-3039/3 (8)	13-3004 (7)	614-324 (6)	643-3059 (I)
RMX250L/M	90-91	12-3039 (8)	13-3004 (7)	614-324 (6)	643-3059 (I)
RMX250N/P	92-93	12-3039/3 (8)	13-3004 (8)	614-326 (6)	643-3059 (I)
RMX250R/S/T/V/W	94-98	12-3039/3 (8)	13-3004 (7)	614-326 (6)	643-3059 (I)
RX250T/X	80-81	12-3039 (8)	— (4)	614-303 (6)	—
SP250Z/D Dual Sport	82-83	12-3039 (8)	— (4)	614-321 (4)	—
		12-3051 (1)	—	—	—
SP250F Dual Sport	1985	12-3039 (8)	— (4)	614-321 (4)	—
		12-3051 (1)	—	—	—
TM250J/K/L/M Champion	72-75	12-3051 (6)	— (6)	614-303 (6)	—
TS250J/K/L/M/A Savage	72-76	12-3051 (6)	— (6)	614-301 (6)	—
TS250B/C/N/T/X	77-81	12-3051 (6)	— (6)	614-301 (6)	—
DR350L-R Offroad	90-94	12-3039/3 (7)	13-3004 (6)	614-319 (6)	643-3064
DR350S-X Offroad	95-99	12-3039/3 (7)	13-3004 (6)	614-319 (6)	643-3069
DR350SL-SP Dual Sport	90-93	12-3039/3 (7)	13-3004 (6)	614-319 (6)	643-3064
DR350SER-SEX Dual Sport	94-99	12-3039/3 (7)	13-3004 (6)	614-319 (6)	643-3069
DR370C/N	78-79	12-3039/3 (5)	— (5)	614-303 (6)	—
RM370A/B	76-77	12-3039/3 (6)	— (6)	614-303 (6)	—
SP370C/N Dual Sport	78-79	12-3039/3 (5)	— (5)	614-303 (6)	—
DR400T	1980	12-3039 (5)	— (5)	614-305 (6)	—
DR-Z400Y-K6	00-06	— (7)	13-3031 (7)	— (6)	—
DR-Z400SY-SK7	00-07	— (7)	13-3031 (7)	— (6)	—
Dual Sport		— (1)	—	—	—
DR-Z400SMK5-SMK7	05-07	— (7)	13-3031 (7)	— (6)	—
Supermotard		— (1)	—	—	—
PE400T/X	80-81	12-3039 (6)	— (5)	614-306 (6)	—
RM400C	1978	12-3039/3 (6)	— (6)	614-303 (6)	—
RM400N/T	79-80	12-3039 (6)	— (5)	614-303 (6)	—
SP400T	1980	12-3039 (6)	— (5)	614-305 (6)	—
TM400R/J/K/L/M Cyclone	71-75	12-3039/3 (7)	— (7)	614-303 (6)	—
TS400L/M/A/B	74-77	12-3039/3 (7)	— (7)	614-305 (6)	—
RM-Z450K5/K6	05-06	— (8)	13-3048 (6)	—	—
		—	13-3049 (1)	—	—
RM465X/Z	81-82	12-3039 (7)	13-3004 (7)	614-303 (6)	—
DR500X/Z/D	81-83	12-3039 (5)	— (5)	— (4)	—
		12-3051 (1)	—	—	—
RM500D/E	83-84	12-3039 (7)	13-3004 (7)	614-303 (6)	—
SP500X/Z/D Dual Sport	81-83	12-3039 (5)	— (5)	— (4)	—
		12-3051 (1)	—	—	—
SP600F Dual Sport	1985	12-3039 (5)	— (5)	— (4)	—
		12-3051 (1)	—	—	—
DR650SL/SM/SN/SP Dual	90-93	12-3039/3 (6)	— (6)	— (4)	643-3068
		12-3051 (1)	—	—	—
DR650SER/SES Dual Sport	94-95	12-3039/3 (6)	— (6)	— (4)	643-3068
		12-3051 (1)	—	—	—
DR650SET-SEK7 Dual	96-07	12-3045 (8)	13-3034 (7)	614-330 (4)	—
			13-3010 (1)	—	—

Yamaha Street

Model	Year	Friction Plate each	Drive(Metal) Plate each	Spring Set	Gasket each
RX50/KL Special	83-84	12-2003 (2)	— (4)	— (4)	643-2024
RX50MK Midnight Special	1983	12-2003 (2)	— (4)	— (4)	643-2024
YSR50T/U/W/A/B/D	87-92	12-2003 (2)	— (4)	— (4)	643-2024
DT80H/J/K	81-83	12-2003 (3)	— (2)	614-219 (4)	643-2024
RD125B/C	75-76	12-2007 (5)	— (5)	614-234 (5)	—
XT125J/K/KC Dual Sport	82-83	12-2047 (4)	— (3)	— (4)	643-2012
SR185H/J Exciter	81-82	12-2047 (5)	— (4)	— (4)	643-2012
BW200N	1985	12-2047 (4)	— (4)	614-206 (4)	643-2012
		12-2007/2 (1)	—	—	—
BW200S	1986	12-2047 (4)	— (4)	614-227 (4)	643-2012
		12-2007/2 (1)	—	—	—
BW200ES/ET/EU	86-88	12-2047 (4)	— (4)	614-227 (4)	643-2012
		12-2007/2 (1)	—	—	—
TW200T/TC-W1/W1C	87-07	12-2047 (4)	— (4)	614-206 (4)	643-2012
Trailway		—	—	—	—
XT200J/K/KC Dual Sport	82-83	12-2047 (4)	— (4)	—	643-2012
XT225D/DC-M/MC Serrow	92-00	12-2047 (4)	— (5)	614-206 (4)	643-2012
		12-2007/2 (1)	—	—	—

Yamaha Street

Model	Year	Friction Plate each	Drive(Metal) Plate each	Spring Set	Gasket each
XT225N/NC-W/WC Serrow	01-07	12-2047 (6)	— (5)	614-206 (4)	643-2012
RD250/A/B	73-75	12-2042 (7)	— (7)	— (6)	—
SR250G/H Exciter	80-81	12-2041/2 (6)	— (5)	614-207 (4)	—
SR250J Exciter	1982	12-2042 (5)	— (4)	614-207 (4)	—
SRX250T/TC	1987	12-2042 (5)	— (4)	— (4)	—
XT250G/H/K/KC Dual	80-83	12-2041/2 (6)	— (5)	614-207 (4)	—
XT250L/LC Dual Sport	1984	12-2042 (5)	— (4)	614-207 (4)	643-2037
XV250U/UC-A/AC	88-90	12-2042 (4)	— (4)	614-207 (4)	—
		12-2042 (1)	—	—	—
XV250G/GC-K/KC Route 66	95-98	12-2042 (4)	— (4)	614-207 (4)	—
		12-2041 (1)	—	—	—
XV250L/LC Virago 250	1999	12-2042 (4)	— (4)	614-207 (4)	—
		12-2041 (1)	—	—	—
XV250P/PC-W1/W1C Virago	02-07	12-2042 (4)	— (4)	614-207 (4)	—
		12-2041 (1)	—	—	—
RD350/A/B	73-75	12-2042 (7)	— (7)	— (6)	—
RZ350L/N/NC/NCII	84-85	12-2042 (7)	— (6)	614-226 (6)	643-2011
XT350N/NC-M/MC Dual	85-00	12-2042 (7)	— (6)	614-209 (5)	643-2037
DT360A	1974				—
XS360C/D/2D	76-77	12-2041 (7)	— (6)	614-207 (4)	—
DT400B/C/D/E	75-78	12-2042 (7)	— (6)	—	—
FZR400U/SUC-A/SAC	88-90	12-2043 (8)	— (7)	614-225 (5)	643-2052
RD400C/D/E/F	76-79	12-2042 (7)	— (6)	614-226 (6)	—
XS400D/E/F	77-79	12-2041 (7)	— (6)	614-207 (4)	—
XS4002E/2F	78-79	12-2041 (7)	— (6)	614-207 (4)	—
XS400G/H Special	80-81	12-2041 (7)	— (6)	614-207 (4)	—
XS400J/K Maxim	82-83	12-2024/2 (5)	— (4)	614-214 (6)	—
XS400RJ/RK Seca	82-83	12-2024/2 (5)	— (4)	614-214 (6)	—
XS400SG/SH/SJ Special	80-82	12-2041 (7)	— (6)	614-207 (4)	—
SR500E/F/G/H	78-81	12-2041/2 (6)	— (7)	614-204 (6)	643-2003
TX500/A	73-74	12-2041 (8)	— (7)	— (6)	—
XS500B/C/D/E	75-78	12-2041 (8)	— (7)	— (6)	—
XT500C/D/E/F/G/D Dual	76-81	12-2041/2 (8)	— (7)	614-204 (6)	643-2003
XV500K Virago	1983	12-2044 (6)	— (5)	614-247 (5)	—
XV535T/TC/U/UC Virago	87-88	12-2044 (6)	— (5)	614-247 (5)	—
XV535A/AC Virago	1990	12-2044 (6)	— (5)	614-247 (5)	—
V535E/EC-M/MC Virago	93-00	12-2044 (6)	— (5)	614-247 (5)	—
XV535S Virago	94-97	12-2044 (6)	— (5)	614-247 (5)	—
XJ550H/J/K Maxim	81-83	12-2041 (7)	— (7)	614-209 (5)	643-2006
		12-2042 (1)	—	—	—
XJ550RH/RJ/RK Seca	81-83	12-2041 (7)	— (7)	614-209 (5)	643-2006
		12-2042 (1)	—	—	—
XZ550RJ/RK Vision	82-83	12-2041/2 (8)	— (7)	614-209 (5)	—
FJ600L/LC/N/NC	84-85	12-2041 (8)	— (7)	614-209 (5)	643-2006
FZ600S/SC/T/TC/U/UC	86-88	12-2041 (8)	— (7)	614-209 (5)	643-2006
FZ600SS/SSC/ST/STC FZ6	04-05	— (6)	— (6)	614-254 (6)	—
		12-2041 (1)	—	—	—
FZ600T/TC/V/VC FZ6	05-06	— (6)	— (6)	614-254 (6)	
		12-2041 (1)	—	—	—
FZR600W/WC/AC	89-90	12-2043 (9)	— (8)	614-225 (5)	643-2052
FZR600RA/RAC-RL/RLC	90-99	12-2043 (9)	— (8)	614-225 (5)	643-2052
SRX600S/SC	1986	12-2041/2 (6)	— (6)	614-210 (5)	643-2013
		12-2042 (1)	—	—	—
XJ600S Seca II	92-98	12-2041 (8)	— (7)	—	—
XT600L/LC-EG/EGC Dual	84-95	12-2041/2 (6)	— (7)	614-209 (5)	643-2013
		12-2042 (1)	—	614-210 (5)	—
YZF600RG/RGC-RV/RVC	95-06	12-2054 (9)	— (8)	—	—
YZF-R6L/LC-T/TC (R6)	99-05	— (8)	— (7)	614-201 (6)	—
YZF-R6V/VC (R6)	2006	— (9)	— (8)	— (6)	—
YZF-R6SN/SNC	2001	— (8)	— (7)	— (6)	—
Champions LTD Edition		—	— (1)	—	—
YZF-R6SR/SRC	2003	— (8)	— (7)	—	—
		—	— (1)	—	—
YZF-R6SV/SVC	2006	— (8)	— (7)	—	—
YZF-R6SPV/SPVC	2006	— (9)	— (8)	— (6)	—
YX600S/SC-A/AC Radian	86-90	12-2041 (8)	— (7)	614-209 (5)	643-2006
TX650A	1974	12-2024/2 (7)	— (6)	—	643-2002
XS650B/C/D/E/F/2F	75-79	12-2024/2 (7)	— (6)	614-214 (6)	643-2002
XS650G/H Special II	80-81	12-2024/2 (6)	— (5)	—	643-2002
XS650SE/SF Special	78-79	12-2024/2 (7)	— (6)	614-214 (6)	643-2002
XS650SG/SH Special	80-81	12-2024/2 (6)	— (5)	614-201 (6)	643-2002

Clutch Plates, Clutch Springs, & Clutch Cover Gasket

Yamaha Street

Model	Year	Friction Plate each	Drive(Metal) Plate each	Spring Set	Gasket each
XS650SJ/SK Heritage	82-83	12-2024/2 (6)	(5)	614-201 (6)	643-2002
XJ650G/H/J/K Maxim	80-83	12-2041 (8)	(8)	614-205 (5)	643-2022
XJ650LH Midnight Maxim	1981	12-2041 (8)	(8)	614-205 (5)	643-2022
XJ650LJ/LK Seca Turbo	82-83	12-2041 (8)	(8)	614-216 (5)	643-2022
XJ650RJ Seca	1982	12-2041 (8)	(8)	614-205 (5)	643-2022
XVS650AK/AKC-AV/AVC	98-06	12-2044 (7)	(7)	614-247 (5)	
V-Star Classic					
XVS650AT	03–06	12-2044 (7)	(7)	614-247 (5)	
V-Star Silverado					
XV650K/KC-S/SC	98-04	12-2044 (7)	(7)	614-247 (5)	
V-Star Custom					
XVS650T/TC/V/VC	05-06	12-2044 (7)	(7)	614-247 (5)	
V-Star Midnight Custom					
FZ700T/TC	1987	12-2041 (7)	(8)	614-254 (6)	643-2045
		12-2042 (1)			
FZX700S/SC/T/TC	86-87	12-2041 (8)	(8)	614-254 (6)	643-2045
XJ700N/NC/SC Maxim	85-86	12-2041 (8)	(8)	(6)	
XJ700XN/XS Maxim X	85-86	12-2041 (8)	(8)	(6)	
XV700L/LC/N/NC Virago	84-85	12-2044 (8)	(7)	614-211 (6)	643-2005
XV700CS/CSC/CT/CTC	86-87	12-2044 (8)	(7)	614-211 (6)	643-2005
XV700SS/SSC Virago	1986	12-2044 (8)	(7)	614-211 (6)	643-2005
FZ750N/S/SC	85-86	12-2041 (8)	(8)	614-254 (6)	643-2045
FZ750U/UC	1988	12-2041 (7)	(8)	614-254 (6)	643-2045
		12-2042 (1)			
FZR750RT/RU	87-88	12-2041 (8)	(8)	614-254 (6)	643-2045
		12-2042 (1)			
XS750D/2D	1977	12-2041 (7)	(6)	614-201 (6)	643-2004
XS750E/F	78-79	12-2041 (7)	(6)	614-201 (6)	643-2004
XS750SE/SF Special	78-79	12-2041 (7)	(6)	614-201 (6)	643-2004
XJ750J/K Maxim	82-83	12-2041 (8)	(8)	614-209 (5)	643-2022
XJ750MK Midnight Maxim	1983	12-2041 (8)	(8)	614-209 (5)	643-2022
XJ750RH/RJ/RK Seca	81-83	12-2041 (8)	(8)	614-209 (5)	643-2022
XV750H/J/K Virago	81-83	12-2044 (8)	(7)	614-211 (6)	643-2005
XV750MK Midnight Virago	1983	12-2044 (8)	(7)	614-211 (6)	643-2005
XV750U/UC-G/GC Virago	88-96	12-2044 (8)	(7)	614-211 (6)	643-2005
XV750H1/HC1/J1/JC1 Virago	96-97	12-2044 (8)	(7)	614-211 (6)	643-2005
YZF750RF/RFC	1994	12-2041 (9)	(8)	614-254 (6)	643-2045
YZF750R	96-98	12-2041 (9)	(8)	614-254 (6)	643-2045
TDM850D/DC/E/EC	92-93	12-2041 (9)	(7)	614-254 (6)	
XS850G/H	80-81	12-2041/2 (7)	(6)	614-201 (6)	643-2004
XS850LG/LH Midnight	80-81	12-2041/2 (7)	(6)	614-201 (6)	643-2004
XS850SG/SH Special	80-81	12-2041/2 (7)	(6)	614-201 (6)	643-2004
XJ900RK Seca	1983	12-2041 (8)	(6)		643-2022
XV920J/K Virago	82-83	12-2044 (8)	(8)	614-204 (6)	643-2005
XV920MK Midnight Virago	1983	12-2044 (8)	(8)	614-204 (6)	643-2005
XV920RH/RJ	81-82	12-2044 (8)	(8)	614-204 (6)	643-2005
FZR100T/TC/U/UC/W/WC	87-89	12-2041 (8)	(8)	614-254 (6)	643-2045
		12-2042 (1)			
FZR1000A/AC-D/DC	90-92	12-2041 (7)	(6)	614-254 (6)	643-2045
		12-2041/3 (1)			
		12-2042 (1)	(8)		
FZR1000E/EC-G/GC	93-95	12-2041 (8)	(8)	614-254 (6)	643-2045
		12-2041/3 (1)			
GTS1000AE/AEC/AF/AFC	93-94	12-2041 (8)	(8)	614-254 (6)	643-2045
		12-2041/3 (1)			
XV1000L/LC/N/NC Virago	84-85	12-2044 (8)	(8)	614-204 (6)	643-2045
YZF100RJ/RJC	1997	12-2041 (8)	(8)	614-254 (6)	643-2045
		12-2041/3 (1)			
YZF1000RK/RKC	1998	12-2024/2 (7)	(6)		
YZF-R1L/LC/M/MC/N/NC	99-01	12-2024/2 (7)	(7)	(6)	
		(1)			
YZF-R1P/PC/R/RC (R1)	02-03	12-2024/2 (7)	(7)	(6)	
YZF-R1S/SC/T/TC/V/VC	04-06	12-2044 (8)	(7)	(6)	
		(1)			
YZF-R1LEV/LEVC/ Limited	2006	12-2044 (8)	(7)	(6)	
		(9)			
YZF-R1SPV/SPVC	2006	12-2044 (8)	(7)		
50th Anniversary		(1)			
FJ1100L/LC/N/NC	84-85	12-2024/2 (6)	(7)		
		12-2033 (3)			

Yamaha Street

Model	Year	Friction Plate each	Drive(Metal) Plate each	Spring Set	Gasket each
XJ1100J Maxim	1982	12-2024/2 (8)	(8)	614-201 (6)	643-2004
XS1100E/F/G/H	78-81	12-2024/2 (8)	(8)	614-201 (6)	643-2004
XS1100LG/LH Midnight	80-81	12-2024/2 (8)	(8)	614-201 (6)	643-2004
XS1100SF/SG/SH/Special	79-81	12-2024/2 (8)	(8)	614-201 (6)	643-2004
XV1100S/SC-L/LC Virago	86-99	12-2044 (8)	(8)		643-2005
XV1100SH/SHC-SK/SKC	96-98	12-2044 (8)	(8)		643-2005
XVS1100V-Star	99-02	17-5812 (8)	(8)		
FJ1200S/SC/T/TC	86-87	12-2024/2 (6)	(7)		643-2048
		12-2033 (2)			
FJ1200W/WC-D/DC	89-92	12-2024/2 (6)	(7)		643-2048
		12-2033 (2)			
FJ1200AD/ADC/AE/AEC	92-93	12-2024/2 (6)	(7)		643-2048
		12-2033 (2)			
VMX12N/S V-Max	85-86	12-2020 (7)	(7)		
		12-2021 (1)			
VMX12U/UC-V/VC V-Max	88-06	12-2020 (7)	(7)		
		12-2021 (1)			
XVZ12/13 Venture & Royale	83-93	12-2020 (7)	(7)	614-217 (6)	
		12-2021 (1)			
XVZ13 Royal Star	96-00	17-5814 (1)	(1)		
Tour Classic/Tour Deluxe		17-5813 (7)	(6)		
XVZ13 Royal Star Venture	99-01	17-5813 (7)	(6)		
XV1600 Road Star	99-02	17-5814 (8)	(8)		
		17-5813 (1)			

Yamaha Street

Model	Year	Friction Plate each	Drive(Metal) Plate each	Spring Set	Gasket each
YFM 50RT/RV Raptor 50	05-06	12-2056 (5)	(4)	(8)	
YFM80N/S/T/U Moto-4	85-88	12-2056 (6)	(5)	(8)	
YFM80D-N/NC Badger	92-01	12-2056 (6)	(5)	(8)	
YFM80WP/WR/WE Raptor	02-04	12-2056 (6)	(5)	(8)	
YFM80RT/RV Raptor	05-			(8)	
YFM80GT/GV/GW Grizzly	05-07			(8)	
YFM100T/U/W/A/B Champ	87-91	12-2056/2 (6)	(5)	(8)	
		12-2056 (1)			
YT125G/H/J Tri-Moto	80-82	12-2036 (7)	(6)	614-202 (8)	
YT125J/K/L/N Tri-Moto	82-85			614-203 (8)	
YT175J/K/L/N Tri-Moto	82-85	12-2036 (8)			
YFM200N Moto-4	1985	12-2043 (5)	(4)	614-206 (4)	643-2017
YFM200DXS/DXT Moto-4	86-87	12-2043 (5)	(4)	614-206 (4)	643-2017
YFM200DXU/DXW Moto-4	88-89	12-2043 (5)	(4)	614-227 (4)	643-2017
YFS200U-V Blaster	88-06	12-2041 (1)	(6)	614-225 (5)	643-2030
		12-2042 (7)			
YFS200SEV Blaster	2006	12-2043 (5)	(6)	614-225 (6)	643-2011
		12-2042 (7)			
YTM200K/L/N Tri-Moto	83-85	12-2043 (5)	(4)	614-206 (4)	643-2017
YTM200EK/EL Tri-Moto	83-84	12-2043 (5)	(4)	614-206 (4)	643-2017
YTM200ERN Tri-Moto	1985	12-2043 (5)	(4)	614-206 (4)	643-2017
YFM225S/T/U Moto-4	86-88	12-2043 (5)	(4)	614-227 (4)	643-2017
YFU1W (230cc) Pro Hauler	1989	12-2043 (5))	(4)	614-227 (4)	
YFU1TW (230cc) Pro Hauler	1989	12-2043 (5)	(4)	614-227 (4)	
YTM225DRN/DRS Tri-Moto	85-86	12-2043 (5)	(4)	614-227 (4)	643-2017
YTM225DX Tri-Moto	83-85	12-2043 (5)	(4)	614-227 (4)	643-2017
YFB250D-H Timberwolf	92-96	12-2043 (5)	(4)		643-2017
YFB250UH-UK Timberwolf	94-00	12-2043 (5)	(4)		643-2017
YFB250UH-UK Timberwolf	96-98	12-2043 (5)	(4)		643-2017
YFM250W/A/B Moto-4	89-91	12-2043 (5)	(4)		643-2017
YFM250XS Beartracker	2004	12-2043 (5)	(4)		643-2017
YTZ250N/S Tri-Moto	85-86	12-2052 (7)	(6)		
YFM350ERT-ERG Moto-4	87-95	12-2042 (6)	(4)		643-2041
		12-2041 (1)	(2)		
YFM350FWT-FWJ Big Bear	87-97	12-2042 (6)	(4)		643-2041
		12-2041 (1)	(2)		
YFM350FWB Big Bear	97-99	12-2042 (7)	(6)		643-2041
YFM350FX Wolverine	95-03	12-2042 (7)	(6)		643-2041
YFM350UH-UL Big Bear	96-99	12-2042 (6)	(6)		643-2041
		12-2041 (1)			
YFM350XT-XS/XSC Warrior	87-04	12-2042 (6)	(6)		643-2041
		12-2041 (1)			

Clutch Plates, Clutch Springs, & Clutch Cover Gasket

Yamaha Street

Model	Year	Friction Plate each	Drive(Metal) Plate each	Spring Set	Gasket each
YFP 350U Terrapro	1988	12-2042 (7)	— (6)	— (5)	
YFZ350T-V Banshee	87-06	12-2042 (7)	— (6)	614-226 (6)	643-2011
YFZ350RB Banshee Limited	2003	12-2042 (7)	— (6)	614-226 (6)	643-2011
YFZ350LER/LES Limited	03-04	12-2042 (7)	— (6)	614-226 (6)	643-2011
YFZ350S Banshee SE	05-06	12-2042 (7)	— (6)	614-226 (6)	643-2011
YFZ350SPV Banshee SP	2006	12-2042 (7)	— (6)	614-226 (6)	643-2011
YFM400FW Kodiak 4WD	93-98	12-2042 (6)	— (6)	— (5)	643-2011
		12-2041 (1)	—	—	—
YFM400FW Kodiak 4WD	1999	12-2042 (7)	— (6)	614-205 (5)	—
YFZ450S/T	04-05	12-2044 (7)	— (7)	614-254 (6)	—
		— (1)	—	—	—
YFZ450V	2006	12-2044 (7)	— (7)	614-254 (6)	—
		(1)	—	—	—
YFZ450W	2007	12-2044 (7)	— (7)	— (6)	—
		(1)	—	—	—
YFZ450BBV	2006	12-2044 (7)	— (7)	614-254 (6)	—
		— (1)	—	—	—
YFZ450LES Limited Edition	2004	12-2044 (7)	— (7)	614-254 (6)	—
		— (1)	—	—	—
YFZ450SET Special Edition	2005	12-2044 (7)	— (7)	614-254 (6)	—
		— (1)	—	—	—
YFZ450SPV Special Edition	2006	12-2044 (7)	— (7)	614-254 (6)	—
		12-2021 (1)	—	—	—
YFM660RN/RNC/RP Raptor	01-02	12-2041 (6)	— (7)	614-209 (5)	—
		12-2042 (2)	—	—	—
YFM660RR/RS/RT Raptor	03-05	12-2041 (6)	— (7)	614-209 (5)	—
		12-2042 (2)	—	—	—
YFM660RPB Raptor 660R	2002	12-2041 (6)	— (7)	614-209 (5)	—
Limited Edition Black		12-2042 (2)	—	—	—
YFM660RLER/RLES Raptor	03-04	12-2041 (6)	— (7)	614-209 (5)	—
Limited Edition Blk		12-2042 (2)	—	—	—
YFM660RSET Raptor SE	2005	12-2041 (6)	— (7)	614-209 (5)	—
		12-2042 (2)	—	—	—
YFM700RV/RW Raptor	06-07	12-2044 (7)	— (7)	614-209 (6)	—
		— (1)	—	—	—
YFM700RSPV Raptor	2006	12-2044 (7)	— (7)	614-254 (6)	—
		— (1)	—	—	—

Yamaha Street

Model	Year	Friction Plate each	Drive(Metal) Plate each	Spring Set	Gasket each
DT50U/W/A	88-90	12-2003 (3)	— (2)	614-219 (4)	—
TT-R50EV/EW	06-07	12-1004 (2)	— (4)	—	—
YZ50G	1980	12-2003 (3)	— (2)	614-219 (4)	643-2024
YZ60H/J/K	81-83	12-2043 (4)	— (3)	614-224 (4)	—
BW80S/T/U Big Wheel	86-88	12-2056 (6)	— (5)	—	643-2028
BW80A Big Wheel	1990	12-2056 (6)	— (5)	—	643-2028
DT80H/J/K	81-83	12-2003 (3)	— (2)	614-219 (4)	643-2024
GT1-80	1973	12-2003 (3)	— (2)	614-219 (4)	643-2024
GT80A/B/C	74-76	12-2003 (3)	— (2)	614-219 (4)	643-2024
GT80E/F	78-79	12-2003 (3)	— (2)	614-219 (4)	643-2024
GTMX/GTMXA/GTMXB-80	73-75	12-2003 (3)	— (2)	614-219 (4)	643-2024
GTMXC/GTMXD-80	76-77	12-2003 (3)	— (2)	614-219 (4)	643-2024
GTMXE/GTMXF-80	78-79	12-2003 (3)	— (2)	614-219 (4)	643-2024
MX80G/H/J	80-82	12-2003 (3)	— (2)	614-219 (4)	643-2024
PW80K Y-Zinger	1983	12-2056 (6)	— (5)	614-220 (6)	643-2028
PW80N Y-Zinger	1985	12-2056 (6)	— (5)	614-220 (6)	643-2028
PW80B-V Y-Zinger	91-06	12-2056 (6)	— (5)	614-220 (6)	643-2028
YZ80A	1974	12-2003 (3)	— (2)	614-224 (4)	643-2024
YZ80B	1975	12-2003 (3)	— (2)	614-224 (4)	643-2024
YZ80C/D	76-77	12-2003/2 (4)	— (3)	614-224 (4)	643-2024
YZ80E/F	78-79	12-2003/2 (5)	— (4)	614-224 (4)	643-2024
YZ80G	1980	12-2003/2 (4)	— (3)	— (4)	643-2024
YZ80H	1981	12-2043 (5)	— (4)	614-219 (4)	—
YZ80J	1982	12-2043 (5)	— (4)	614-219 (4)	643-2018
YZ80J/K/L/N	83-85	12-2043 (5)	— (4)	614-224 (4)	643-2018
YZ80S/T/U/W/A/B/D	86-92	12-2043 (6)	— (5)	614-224 (4)	643-2018
YZ80E1/F1	93-94	12-2043 (6)	— (5)	— (4)	643-2059
YZ80G1/H1/J1/K1/L1/M1/N1	95-01	12-2043 (7)	— (6)	614-225 (4)	643-2059 (I)
YZ85P/R/S	02-04	12-2043 (7)	— (6)	614-225 (4)	643-2059 (I)
YZ85T/V/W1	05-07	12-2043 (7)	— (6)	614-234 (4)	643-2059 (I)
TT-R90M/MC/N/P/R/S	00-04	12-2060 (5)	— (4)	— (4)	—

Yamaha Street

Model	Year	Friction Plate each	Drive(Metal) Plate each	Spring Set	Gasket each
TT-R90ER/ES/ET/EV/EW	03-07	12-2060 (5)	— (4)	— (4)	—
MX100A/B	74-75	— (5)	— (5)	614-225 (5)	—
MX100F/G/H/J/K	79-83	12-2003/2 (5)	— (4)	614-219 (4)	—
RT100A-M	90-00	12-2003/2 (5)	— (4)	614-219 (4)	—
YZ100C/D	76-77	12-2047 (5)	— (4)	614-225 (5)	—
YZ100E/F/G/H	78-81	12-2047 (5)	— (4)	614-225 (5)	—
YZ/100J/K	82-83	12-2047 (5)	— (4)	614-225 (5)	—
IT125G/H	80-81	12-2047 (5)	— (4)	614-235 (5)	—
MX125A/B	74-75	— (5)	— (4)	614-235 (5)	—
MX125C	1976	12-2047 (6)	— (5)	614-225 (5)	—
TT-R125ER/ES	03-04	12-2003/2 (5)	— (4)	614-224 (4)	—
TT-R125ET/EV/EW	05-07	12-2003/2 (5)	— (4)	614-224 (4)	—
TT-R125M/MC-S	00-04	12-2003/2 (5)	— (4)	614-224 (4)	—
TT-R125LN/LPC/LR/LS	01-04	12-2003/2 (5)	— (4)	614-224 (4)	—
TT-R125LT/LV/LW	05-07	12-2003/2 (5)	— (4)	614-224 (4)	—
TT-R125LER/LES	03-04	12-2003/2 (5)	— (4)	614-224 (4)	—
TT-R125LET/LEV/LEW	05-07	12-2003/2 (5)	— (4)	614-224 (4)	—
TT-R125LWM	2000	12-2003/2 (5)	— (4)	614-224 (4)	—
XT125J/K/KC Dual Sport	82-83	12-2047 (4)	— (3)	— (4)	643-2012
YZ125A/B	74-75	— (5)	— (5)	614-235 (5)	—
YZ125C	1976	12-2047 (5)	— (5)	614-235 (5)	—
YZ125X	1976	12-2047 (5)	— (5)	614-235 (5)	—
YZ125D	1977	12-2047 (5)	— (5)	614-235 (5)	—
YZ125E	1978	12-2047 (5)	— (5)	614-235 (5)	—
YZ125F	1979	12-2047 (5)	— (5)	614-235 (5)	—
YZ125G	1980	12-2047 (5)	— (4)	614-225 (5)	—
YZ125H	1981	12-2047 (5)	— (5)	614-225 (5)	—
YZ125J	1982	12-2051 (6)	— (5)	614-225 (5)	—
YZ125K/L/N	83-85	12-2054 (6)	— (5)	614-225 (5)	—
YZ125S/T	86-87	12-2054 (6)	— (5)	614-248 (5)	—
YZ125U	1988	12-2054 (7)	— (6)	614-226 (6)	—
YZ125W/A	89-90	12-2054 (7)	— (6)	614-226 (6)	—
YZ125B/D1	91-92	12-2059 (7)	— (6)	614-205 (5)	—
YZ125E1	1993	12-2059 (8)	— (7)	614-205 (5)	—
YZ125F1/G1	94-95	12-2059 (8)	— (7)	614-205 (5)	643-2046 (I)
YZ125H1	1996	12-2059 (8)	— (7)	614-216 (5)	643-2046 (I)
YZ125J1/K1/L	97-01	12-2059 (8)	— (7)	614-205 (5)	643-2046 (I)
YZ125P/R/S1	02-04	12-2059 (8)	— (7)	614-216 (5)	643-2046 (I)
YZ125T1/V/W1	05-07	12-2059 (8)	— (7)	614-205 (5)	—
IT175D/E/F	77-79	12-2047 (6)	— (7)	614-225 (5)	—
IT175DG/H/J/K	80-83	12-2047 (6)	— (5)	614-225 (5)	—
MX175A/B	74-75	12-2006 (1)	— (5)	614-235 (5)	—
YZ175C	1976	12-2047 (6)	— (5)	614-225 (5)	—
BW200N/S	85-86	12-2047 (4)	— (5)	614-227 (5)	643-2012
		12-2007/2 (1)	—	—	—
BW200ES/ET/EU	86-88	12-2047 (4)	— (4)	614-227 (4)	643-2012
		12-2007/2 (1)	—	—	—
IT200L/N/S	84-86	12-2047 (6)	— (5)	614-225 (5)	—
TW200T/TC-W1/W1C	87-07	12-2047 (6)	— (4)	614-206 (4)	643-2012
Trailway		—	—	—	—
WR200RD	1992	12-2043 (6)	— (6)	614-225 (5)	643-2013
		12-2058 (1)	—	—	—
XT200J/K/KC Dual Sport	82-83	12-2047 (5)	— (4)	614-206 (4)	643-2012
TT225S/T	86-87	12-2047 (5)	— (5)	614-206 (4)	643-2012
		12-2007/2 (1)	—	—	—
TT-R225/L/LC-S/SC	99-04	12-2047 (5)	— (5)	614-206 (4)	643-2012
		12-2007/2 (1)	—	—	—
XT225D/DC-M/MC Serow	92-00	12-2047 (5)	— (5)	614-206 (4)	643-2012
		12-2007/2 (1)	—	—	—
XT225N/NC-W/WC Serow	01-07	12-2047 (6)	— (5)	614-206 (4)	643-2012
TT-R230T/TC-W/WC	05-07	12-2047 (5)	— (5)	614-206 (4)	643-2012
		12-2007/2 (1)	—	—	—
DT2MX-250	1972	12-2042 (6)	— (8)	— (6)	—
IT250D/E	77-78	12-2041 (6)	— (5)	614-226 (6)	—
IT250F	1979	12-2041 (5)	— (4)	614-226 (6)	—
IT250G	1980	12-2041 (5)	— (4)	614-226 (6)	—
IT250H/J	81-82	12-2041 (7)	— (6)	614-226 (6)	643-2016
IT250K	1983	12-2052 (7)	— (6)	614-226 (6)	643-2016
MX250/A	73-74	12-2042 (6)	— (7)	— (6)	—
MX250B	1975	— (7)	— (6)	614-228 (6)	—
TT250G/H/J	80-82	12-2041/2 (6)	— (5)	614-207 (4)	—

Clutch Plates, Clutch Springs, & Clutch Cover Gasket

Yamaha Dual Sport & Offroad

Model	Year	Friction Plate each	Drive(Metal) Plate each	Spring Set	Gasket each
TT250RL/RLC	1999	12-2059 (7)	— (6)	614-216 (5)	—
TT-R250M/MC-V/VC	00-06	12-2059 (7)	— (6)	614-216 (5)	—
WR250ZB/ZD/ZE	91-93	12-2044 (7)	— (6)	614-228 (6)	643-2046 (I)
WR250ZF/ZG/ZH/ZJ	94-97	12-2044 (8)	— (7)	614-228 (6)	643-2046 (I)
WR250FN-FV	01-06	12-2059 (9)	— (8)	614-216 (5)	—
XT250G/H/J/K/KC Dual	80-83	12-2041/2 (6)	— (5)	614-207 (4)	—
XT250L/LC Dual Sport	1984	12-2042 (5)	— (4)	614-207 (4)	643-2037
YZ250A/B	74-75	12-2041 (6)	— (5)	— (6)	—
YZ250C	1976	— (7)	— (6)	614-226 (6)	—
YZ250D	1977	12-2041 (6)	— (5)	614-226 (6)	—
YZ250E	1978	12-2041 (6)	— (5)	614-226 (6)	—
YZ250F	1979	12-2041 (5)	— (4)	614-226 (6)	—
YZ250G	1980	12-2041 (6)	— (5)	614-226 (6)	643-2016
YZ250H	1981	12-2041 (7)	— (6)	614-226 (6)	643-2016
YZ250J/K/L	82-84	12-2052 (7)	— (6)	614-226 (6)	—
YZ250N/S/T	85-87	12-2052 (7)	— (6)	614-204 (6)	—
YZ250U/W	88-89	12-2044 (7)	— (6)	614-211 (6)	643-2046
YZ250A/B/D1	90-92	12-2044(7)	— (6)	614-211 (6)	643-2046 (I)
YZ250E1/F1/G1/H1/J1/K1	93-98	12-2044 (8)	— (7)	614-211 (6)	643-2046 (I)
YZ250L1	1999	12-2044 (8)	— (7)	614-211 (6)	—
YZ250M1/N	00-01	12-2044 (8)	— (7)	— (6)	—
YZ250P-D2	02-12	12-2044 (8)	— (7)	— (6)	—
YZ250WRW/WRA	89-90	12-2044 (7)	— (6)	614-211 (6)	643-2046
YZ250FN-FV	01-06	12-2059 (9)	— (8)	614-216 (5)	—
BW350T/U Big Wheel	87-88	12-2042 (7)	— (6)	614-216 (5)	—
TT350S/T	86-87	12-2042 (7)	— (6)	614-209 (5)	643-2037
TY350N/S Trials	85-86	12-2052 (6)	— (5)	— (6)	—
XT350N/NC-M/MC Dual	85-00	12-2042 (7)	— (6)	614-209 (5)	643-2037
RT2MX-3600	1972	12-2042 (7)	— (8)	— (6)	—
YZ360A/B	74-75	12-2041(6)	— (5)	— (6)	—
IT400C	1976	12-2041 (7)	— (6)	614-226 (6)	—
IT400D/E	77-78	12-2041 (7)	— (6)	614-226 (6)	—
IT400F	1979	12-2041 (7)	— (6)	614-226 (6)	—
WR400FK/FL/FM	98-00	12-2041/2 (7)	— (7)	— (5)	—
		12-2041 (1)	—	—	—

Yamaha Dual Sport & Offroad

Model	Year	Friction Plate each	Drive(Metal) Plate each	Spring Set	Gasket each
YZ400F	1979	12-2041 (7)	— (6)	614-226 (6)	—
YZ400FK/FL	98-99	12-2041/2 (7)	— (7)	614-216 (5)	—
		12-2041 (1)	—	—	—
IT425G	1980	12-2041 (7)	— (6)	614-226 (6)	—
WR426FN/FP	01-02	12-2044 (8)	— (8)	— (6)	—
		— (1)	—	—	—
YZ426FM	2000	12-2044 (9)	— (8)	614-201 (6)	—
YZ426FN	01-02	12-2044 (8)	— (8)	— (6)	—
		— (1)	—	—	—
WR450FR/FS	03-04	12-2044 (9)	— (8)	— (6)	—
WR450FT/FV	05-06	12-2044 (8)	— (7)	— (6)	—
YZ450FR/FS/FT/FV	03-06	12-2044 (9)	— (8)	— (6)	—
IT465H/J	81-82	12-2041 (7)	— (6)	614-226 (6)	643-2016
YZ465G/H	80-81	12-2041 (7)	— (6)	614-226 (6)	643-2016
IT490K/L	83-84	12-2052 (7)	— (6)	614-226 (6)	643-2016
YZ490J/K/L/N	82-85	12-2052 (7)	— (6)	614-226 (6)	643-2016
YZ490S/T/U/W/A	86-90	12-2052 (7)	— (6)	614-226 (6)	643-2016
TT500C/D/E/F/G/H	76-81	12-2041/2 (8)	— (7)	614-204 (6)	643-2003
WR500ZD/ZE	92-93	12-2052 (7)	— (6)	614-226 (6)	643-2016
XT500C/D/E/E/F/G/H	76-81	12-2041/2 (8)	— (7)	614-204 (6)	643-2003
XT550J Dual Sport	1982	12-2041/2 (7)	— (7)	614-210 (5)	643-2013
		12-2042 (1)	—	—	—
XT550K Dual Sport	1983	12-2041/2 (6)	— (7)	614-210 (5)	643-2013
		12-2042 (2)	—	—	—
TT600K/L/N/S	83-86	12-2041/2 (6)	— (7)	614-213 (5)	643-2013
		12-2042 (1)	—	—	—
XT600L/LC-W/WC Dual	84-89	12-2041/2 (6)	— (7)	614-213 (5)	643-2013
		12-2042 (1)	—	—	—
XT600EA/EAC-EG/EGC	90-95	12-2041/2 (6)	— (7)	614-210 (5)	643-2013
		12-2042 (1)	—	—	—

OEM - Sudco Clutch Plate Interchange

Honda Friction Plates

O.E.M. Reference	Order No.
22201-001-010	12-1012
22201-028-000	12-1004
22201-030-000	12-1004
22201-030-405	12-1004
22201-033-010	12-1017
22201-033-405	12-1017
22201-040-000	12-1012
22201-046-000	12-1017
22201-086-000	12-1011
22201-087-010	12-1012
22201-088-000	12-1012
22201-092-010	12-1011
22201-096-000	12-1017
22201-107-000	12-1019
22201-121-631	12-1017
22201-121-690	12-1017
22201-165-951	12-1012
22201-166-000	12-1019
22201-235-000	12-1034
22201-240-000	12-1025
22201-268-020	12-1059/2
22201-283-000	12-1061/2
22201-286-010	12-1061/3
22201-300-000	12-1033
22201-302-010	12-1034
22201-323-010	12-1059

Honda Friction Plates

O.E.M. Reference	Order No.
22201-357-020	12-1061/3
22201-360-000	12-1019/2
22201-360-306	12-1019/2
22201-369-000	12-1061/3
22201-371-000	12-1033
22201-376-000	12-1061/3
22201-415-000	12-1061/3
22201-415-306	12-1061/3
22201-422-000	12-1044
22201-430-000	12-1046
22201-444-000	12-1047
22201-444-306	12-1047
22201-463-000	12-1067
22201-961-003	12-1046
22201-GBF-B40	12-1019
22201-GC4-600	12-1019
22201-GC4-701	12-1019
22201-GF6-000	12-1019
22201-GN8-920	12-1019
22201-GS2-000	12-1019
22201-GW8-681	12-1011
22201-HA2-000	12-1042/2
22201-HA5-670	12-1042/2
22201-HE0-000	12-1093
22201-HP1-670	12-1088
22201-HP2-670	12-1019

Honda Friction Plates

O.E.M. Reference	Order No.
22201-KA3-700	12-1019
22201-KA3-711	12-1042/2
22201-KA3-712	12-1042/2
22201-KA3-760	12-1087
22201-KA4-711	12-1054
22201-KA4-712	12-1054
22201-KAE-000	12-1042/2
22201-KB4-670	12-1019
22201-KBG-671	12-1019
22201-KBG-900	12-1019
22201-KBG-A00	12-1019
22201-KBW-900	12-1019
22201-KE1-000	12-1042/2
22201-KEB-000	12-1019
22201-KEB-600	12-1019
22201-KF0-000	12-1042/2
22201-KG0-980	12-1042/2
22201-KL3-670	12-1042/2
22201-KM4-000	12-1042/2
22201-KPM-850	12-1019
22201-KRN-670	12-1087
22201-KS6-700	12-1087
22201-KY1-000	12-1068
22201-KY2-000	12-1059
22201-KZ3-730	12-1054
22201-MA6-000	12-1059

Honda Friction Plates

O.E.M. Reference	Order No.
22201-MA7-000	12-1061/2
22201-MAE-000	12-1042/2
22201-MAH-000	12-1061
22201-MAL-600	12-1042/2
22201-MAS-000	12-1042
22201-MAS-E00	12-1042/2
22201-MAV-000	12-1042
22201-MB0-003	12-1061
22201-MBB-000	12-1061
22201-MBN-670	12-1088
22201-MC7-000	12-1067
22201-MCB-610	12-1042
22201-ME2-000	12-1061/3
22201-ME9-000	12-1061
22201-MEB-670	12-1054
22201-MEL-000	12-1059
22201-MEN-670	12-1054
22201-MG3-000	12-1054
22201-MG8-000	12-1061
22201-MG8-010	12-1061
22201-MG9-000	12-1067
22201-MJ1-761	12-1061
22201-MJ8-000	12-1068
22201-MK2-000	12-1054
22201-MK4-600	12-1088
22201-ML0-781	12-1019

Clutch Plates reference continues on next page, 406.

Motion Pro Clutch Holding Tool

Made from medium carbon steel with hardened jaws. Features 8mm spanner pins. Jaws open up to 5" wide. Hold clutch hubs, flywheels, gears, sprockets, etc. Recommended for square tooth style clutch hubs. **NOT RECOMMENDED** for v-groove or half round style clutch hubs. Sold each.

Order No. 950-728

Motion Pro Rotor and Sprocket Holder

Keeps flywheels, rotors and sprockets from rotating during removal and installation. Holds sprockets and rotors with holes center to center at a minimum distance of 13mm and a maximum distance of 230mm. Features 5 and 9mm pins. Adjustable stop-screw keeps tool open at set distance.

Order No. 950-756

O.E.M. - Sudco Clutch Plate Interchange

Honda Friction Plates

O.E.M. Reference	Order No.
22201-ML4-610	12-1042
22201-ML8-000	12-1079
22201-ML8-600	12-1079
22201-MM5-000	12-1061
22201-MN4-000	12-1059
22201-MN5-010	12-1045
22201-MN5-020	12-1045
22201-MN8-000	12-1042
22201-MN8-700	12-1042
22201-MR7-000	12-1042/2
22201-MR8-000	12-1019
22201-MS6-620	12-1042/2
22201-MT6-601	12-1059
22201-MT7-000	12-1061
22201-MT8-000	12-1045
22201-MV4-000	12-1042/2
22201-MW3-600	12-1059
22201-MW3-960	12-1059
22201-MY3-000	12-1061
22201-MY6-670	12-1061/4
22202-371-000	12-1070
22202-390-000	12-1070
22202-392-000	12-1070
22202-422-000	12-1072
22202-425-000	12-1073
22202-463-000	12-1074
22202-KV3-840	12-1094
22202-KV3-980	12-1094
22202-MAE-000	12-1034
22202-MG8-000	12-1061
22202-ML4-610	12-1034
22202-ML4-611	12-1034
22202-ML8-000	12-1079
22202-ML8-600	12-1079
22202-MN5-020	12-1073
22202-MT8-000	12-1073
22202-MV8-920	12-1034
22331-086-020	12-1077
22331-GW8-681	12-1077

Honda Metal Plates

22310-GB0-910	13-1020
22311-096-000	13-1021
22311-200-000	13-1046
22311-968-000	13-1004
22311-HE0-000	13-1007
22311-KN4-680	13-1005
22321-041-000	13-1001
22321-046-010	13-1001
22321-046-020	13-1001
22321-360-000	13-1009
22321-371-010	13-1027
22321-422-000	13-1028
22321-425-000	13-1029
22321-429-000	13-1014
22321-HN0-670	13-1049
22321-KA3-700	13-1008
22321-KA4-700	13-1018
22321-KA4-710	13-1015
22321-KE7-000	13-1030
22321-KE8-000	13-1006
22321-KF0-770	13-1011
22321-KZ3-690	13-1019
22321-MAS-000	13-1031
22321-MAT-000	13-1032
22321-MG8-000	13-1033

Honda Metal Plates

O.E.M. Reference	Order No.
22321-MG8-000	13-1023
22321-MG9-000	13-1027
22321-MM9-000	13-1013
22321-MN5-000	13-1034
22321-MN8-000	13-1035
22321-MR5-670	13-1036
22321-MR7-000	13-1012
22321-MT3-000	13-1017
22321-MV4-000	13-1048
22321-MV9-630	13-1037
22321-MW0-000	13-1038
22322-390-000	13-1039
22322-425-000	13-1040
22322-463-000	13-1041
22322-MEL-000	13-1050
22322-MG9-000	13-1042
22322-ML8-000	13-1043
22322-MN5-000	13-1044
22322-MZ0-000	13-1045
22331-046-000	13-1002
22341-943-000	13-1003
23311-200-000	13-1046
23311-413-000	13-1047
23321-329-000	13-1025
23321-333-010	13-1026

Kawasaki Friction Plates

13088-0003	12-4063
13088-0005	12-4063
13088-0006	12-4063
13088-0010	12-1054
13088-0012	12-1054
13088-0013	12-4063
13088-0014	12-4063
13088-0015	12-4063
13088-0018	12-4063
13088-0023	12-4040
13088-006	12-4038
13088-015	12-4049
13088-021	12-4052
13088-025	12-4041
13088-030	12-1045
13088-034	12-4049
13088-039	12-4041
13088-040	12-4040
13088-041	12-1061/4
13088-1002	12-4049
13088-1003	12-1061/4
13088-1004	12-4032
13088-1008	12-4049
13088-1009	12-1061/4
13088-1010	12-4038
13088-1011	12-4038
13088-1012	12-1012
13088-1013	12-4040
13088-1015	12-4041
13088-1016	12-1019
13088-1017	12-1004
13088-1018	12-4044
13088-1051	12-4040
13088-1052	12-4062
13088-1056	12-4041
13088-1057	12-4049
13088-1058	12-4058
13088-1062	12-4040
13088-1066	12-4059
13088-1068	12-1042/2

Kawasaki Friction Plates

O.E.M. Reference	Order No.
13088-1069	12-4059
13088-1070	12-4060
13088-1072	12-4058
13088-1076	12-4058
13088-1077	12-1068/2
13088-1081	12-4058
13088-1082	12-4060
13088-1083	12-4062
13088-1084	12-4063
13088-1085	12-1034
13088-1087	12-4040
13088-1088	12-4065
13088-1089	12-4040
13088-1090	12-4058
13088-1091	12-1061/4
13088-1098	12-1042/2
13088-1101	12-4064
13088-1102	12-4063
13088-1103	12-4038
13088-1105	12-4040
13088-1107	12-4062
13088-1111	12-4038
13088-1113	12-1004
13088-1114	12-4059
13088-1122	12-4058
13088-1124	12-4063
13088-1125	12-4058
13088-1131	12-1059
13088-1132	12-3065
13088-1133	12-4040
13088-1139	12-4040
13088-1140	12-3065
13088-1143	12-1059
13088-1145	12-4062
13088-S001	12-3029
13088-S005	12-3004

Kawasaki Metal Plates

13089-0003	13-4059
13089-0016	13-4062
13089-0017	13-4063
13089-003	13-4001
13089-005	13-4012
13089-013	13-4002
13089-022	13-4003
13089-026	13-4004
13089-027	13-4005
13089-1001	13-4008
13089-1003	13-4006
13089-1004	13-4007
13089-1005	13-4008
13089-1008	13-4011
13089-1009	13-4012
13089-1010	13-4013
13089-1012	13-4014
13089-1013	13-4015
13089-1014	13-4016
13089-1015	13-4017
13089-1016	13-4018
13089-1017	13-4020
13089-1056	13-4019
13089-1057	13-4020
13089-1063	13-4040
13089-1066	13-4022
13089-1067	13-4023
13089-1068	13-4024
13089-1070	13-4026

Kawasaki Metal Plates

O.E.M. Reference	Order No.
13089-1071	13-4027
13089-1073	13-4028
13089-1074	13-4033
13089-1075	13-4051
13089-1076	13-4031
13089-1079	13-4033
13089-1080	13-4052
13089-1081	13-4053
13089-1084	13-4054
13089-1085	13-4038
13089-1087	13-4048
13089-1089	13-4040
13089-1092	13-4042
13089-1094	13-4044
13089-1095	13-4045
13089-1097	13-4049
13089-1098	13-4040
13089-1120	13-4047
13089-1123	13-4056
13089-1124	13-4057
13089-1125	13-4058
13089-S001	13-3003

O.E.M. - Sudco Clutch Plate Interchange

Suzuki Friction Plates

O.E.M. Reference	Order No.
21440-19F00	12-3051
21440-35F00	12-1034
21440-39F00	12-1034
21441-01B00	12-3029/2
21441-02B00	12-3053
21441-02F10	12-3064
21441-02F11	12-3064
21441-03B00	12-3029
21441-03B01	12-3029
21441-04400	12-3004
21441-04501	12-3010
21441-04700	12-3011
21441-04710	12-3011
21441-06B00	12-3052
21441-06B01	12-3052
21441-07200	12-3013
21441-07A00	12-3039/3
21441-07A01	12-3039/3
21441-07A02	12-3039/3
21441-08000	12-3015
21441-08001	12-3015
21441-08002	12-3015
21441-09300	12-3041
21441-09D02	12-3004
21441-10000	12-3029
21441-11900	12-3029/2
21441-12000	12-3021
21441-12010	12-3021
21441-12D00	12-3039/3
21441-12D01	12-3039/3
21441-13A00	12-3029
21441-13A01	12-3029
21441-16500	12-3051
21441-16710	12-3025
21441-16711	12-3025
21441-17C02	12-3063
21441-17E10	12-3063
21441-17E21	12-3063
21441-19001	12-3033
21441-19A00	12-3029
21441-19A001	12-3029
21441-20C00	12-3063
21441-21D11	12-3013
21441-22001	12-3013
21441-22A00	12-3029/2
21441-22A01	12-3029/2
21441-24F00	12-4062
21441-24F10	12-4062
21441-24F20	12-4062
21441-24F30	12-4062
21441-25C01	12-3029
21441-28301	12-3029
21441-28C10	12-3039
21441-28C11	12-3039
21441-29B01	12-3029
21441-31600	12-3041/2
21441-31D00	12-3045
21441-31D20	12-3045
21441-31E00	12-1042/2
21441-31E10	12-1042/2
21441-31E20	12-1042/2
21441-31E30	12-1042/2
21441-31E40	12-1042/2
21441-31E50	12-1042/2
21441-31E60	12-1042/2
21441-31E70	12-1042/2
21441-32C00	12-3061

Suzuki Friction Plates

O.E.M. Reference	Order No.
21441-32C01	12-3061
21441-32C50	12-3029
21441-33C51	12-3029
21441-34000	12-2024
21441-35000	12-3033
21441-35300	12-3033
21441-36200	12-3061
21441-36E00	12-3062
21441-36E10	12-3062
21441-36F00	12-4063
21441-36F10	12-4063
21441-36F20	12-4063
21441-36F30	12-4063
21441-37001	12-2024
21441-37400	12-3039
21441-37410	12-3039
21441-37430	12-3039
21441-37440	12-3039
21441-37E00	12-4040
21441-37E10	12-4040
21441-37E20	12-4040
21441-40400	12-3039
21441-40402	12-3039
21441-40A00	12-3025
21441-40A00	12-3054
21441-40A01	12-3025
21441-40F00	12-4063
21441-40F10	12-4063
21441-41B01	12-3029/2
21441-41B02	12-3029/2
21441-42A00	12-3029
21441-42G00	12-3021
21441-43D00	12-3062
21441-44B00	12-3045
21441-44B01	12-3045
21441-45001	12-3041/2
21441-45100	12-3041
21441-45100	12-3041/2
21441-46000	12-3029
21441-46010	12-3029
21441-48B00	12-3052
21441-48B10	12-3052
21441-49001	12-2024/2
21441-49002	12-2024/2
21441-49200	12-3045
21442-02F10	12-3065
21442-02F11	12-3065
21442-12D00	12-3051
21442-17C00	12-3063
21442-24000	12-3033/2
21442-24001	12-3033/2
21442-31E00	12-1034
21442-31E00	12-3034
21442-31E21	12-1034
21442-37400	12-3051
21442-37401	12-3051
21442-48B00	12-3052
K1308-80005	12-4063
K1308-80006	12-4063
K1308-80014	12-4063
K1308-80015	12-4063

Suzuki Metal Plates

O.E.M. Reference	Order No.
21451-02F10	13-3041
21451-02F30	13-3042
21451-04400	13-3012
21451-13E10	13-3013
21451-14D00	13-3004
21451-17C00	13-3001
21451-17E00	13-3002
21451-17E10	13-3002
21451-19A00	13-3003
21451-24F00	13-3036
21451-24F10	13-3037
21451-28C30	13-3004
21451-28C31	13-3004
21451-31E00	13-3005
21451-31E10	13-3028
21451-31E20	13-3043
21451-31E20	13-3038
21451-31E30	13-3039
21451-31E30	13-3044
21451-35G00	13-3048
21451-37F00	13-3035
21451-40F00	13-3040
21451-40F10	13-3045
21451-40F20	13-3046
21451-41G00	13-3047
21451-44D00	13-3031
21451-45000	13-3004
21451-48B00	13-3009
21451-49200	13-3010
21452-35G00	13-3049
K1308-91009	13-4012
KK-130-89013	13-4002

Yamaha Friction Plates

116-16521-00-00	12-2056
131-16321-00-00	12-2003
132-16321-00-00	12-2006
168-16321-10-00	12-2042
1HX-16331-00-00	12-2058
1J7-16321-01-00	12-2041
1LX-16321-00-00	12-2054
1P6-E6330-00-00	12-1004
1V1-16321-00-00	12-2003/2
21V-16321-00-00	12-2043
22F-16521-00-00	12-2056
22U-16321-00-00	12-2044
24X-16321-00-00	12-2054
25G-16521-00-00	12-2031/2
25G-16521-01-00	12-2031/2
25G-16521-02-00	12-2019
25G-16521-02-00	12-2031/2
25G-16521-09-00	12-2019
25G-16521-09-00	12-2031/2
26H-16307-00-00	12-2020
26H-16307-01-00	12-2020
26H-16321-00-00	12-2021
26H-16321-01-00	12-2021
26H-16331-00-00	12-2020
26H-16331-01-00	12-2020
307-16321-00-00	12-2007
307-16321-01-00	12-2007
307-16321-09-00	12-2007
31A-16321-00-00	12-2041
31A-16321-01-00	12-2041
341-16321-00-00	12-2024
341-16321-03-00	12-2024

Yamaha Friction Plates

O.E.M. Reference	Order No.
341-16321-09-00	12-2024
341-16321-13-00	12-2024/2
360-16321-00-00	12-2042
36X-16321-00-00	12-2007/2
36Y-16331-00-00	12-2033
383-16321-00-00	12-2041
3E5-16521-00-00	12-2056
3FV-16321-00-00	12-2041
3FV-16321-01-00	12-2041
3GM-16321-00-00	12-2041/3
3HA-16321-00-00	12-2006
3JD-16321-00-00	12-2054
3JD-16331-00-00	12-2054
3V3-16321-00-00	12-2035
3X3-16521-00-00	12-2036
3XJ-16321-00-00	12-2059
3XK-16321-00-00	12-2044
3XP-16321-00-00	12-2043
3XV-16321-30-00	12-2059/2
3XV-16321-40-00	12-2059/2
3YR-16321-00-00	12-2060
409-16321-00-00	12-2038
437-16321-00-00	12-2006
4ES-16321-00-00	12-2043
4EU-16321-00-00	12-2003
4FN-16321-00-00	12-2041
4H7-16321-00-00	12-2041
4H7-16321-01-00	12-2041
4H7-16321-02-00	12-2041
4JH-16321-00-00	12-2054
4L0-16321-01-00	12-2042
4V0-16321-00-00	12-2043
4X7-16321-00-00	12-2044
525-16321-00-00	12-2047
537-16321-00-00	12-2047
559-16321-01-00	12-2007/2
56J-16521-00-00	12-2056/2
583-16321-00-00	12-2041/2
598-16321-01-00	12-2003/2
5BE-16321-00-00	12-2041/2
5BE-16331-00-00	12-2041
5DH-16321-00-00	12-2059
5JW-16321-00-00	12-2024/2
5MP-16321-00-00	12-2047
5TA-16321-00-00	12-2044
5TG-16321-00-00	12-2044
5VY-16321-00-00	12-2044
5VY-16330-00-00	12-2044
5X4-16321-00-00	12-2051
5X5-16321-00-00	12-2052
5X5-16321-01-00	12-2052
5XG-E6321-00-00	12-2043
5Y1-16321-00-00	12-2041/2
5Y1-16331-00-00	12-2042
5Y1-16331-01-00	12-2042
99999-00762-00	12-2024

RK Chain

RK Standard Chain

These RKM Standard chains are manufactured in Malaysia under technical license from RK Japan. Quality performance at an economical price. Available in the following sizes and links.

Links	M420STD	428STD	428 H-D
Link	—	316-000	—
80	—	—	—
82	315-002	—	—
84	—	—	—
86	—	—	—
88	—	—	—
90	—	—	—
92	—	—	—
94	—	—	—
96	—	316-009	—
98	—	—	—
100	—	—	—
102	—	—	—
104	—	—	—
106	—	—	—
108	—	—	—
110	315-016	—	320-016
112	—	—	320-017
114	—	—	—
116	—	—	—
118	—	—	—
120	—	—	—
Conn. Links	315-099	316-099	—
25 Ft. Reel	—	316-100	—
50 Ft. Reel	—	—	—
100 Ft. Reel	—	316-102	—
200 Ft. Reel	—	—	—

GB520MXZ3

Non o-ring, heavy duty long lasting chain with gold plated side plate. Recommended for 250cc/500cc MX.

Description	Order No.
1 Link	329-075
Conn. Link	329-083
25 Ft Reel	329-080
100 Ft Reel	329-082

428HO

O-ring, heavy duty chain.

Description	Order No.
1 Link	314-097
428HO x 120L	314-021
25 Ft Reel	314-100
100 Ft Reel	314-102

428MXZ

Non o-ring, heavy duty chain. Recommended for 125cc MX and below.

Description	Order No.
428MXZ x 120L	320-221
Conn. Link	320-299
100 Ft Reel	320-298

530DR

Non o-ring, heavy duty chain. For drag racing.

Description	Order No.
530DR x 1 Link	329-100
530DR Conn. Links	329-099

SUNSTAR

"Works" Triplestar Alloy Sportbike Sprockets

Here's the most cost effective performance and handling improvement modification you can make to your Japanese sportbike. Sunstar Engineering's lightweight 7075-T6 heat treated aircraft grade aluminum Triplestar Sportbike Sprockets save more than 2 pounds of weight over stock steel sprockets to reduce unsprung suspension and reciprocating drive train weight without sacrificing strength. The result is improved handling, quicker acceleration and braking. Combined with a gear ratio change the performance gain can be even more impressive! Each rear sprocket features a computer machined lightening pattern and is completed with an attractive gold anodized finish. Sunstar Triplestar Sportbike Sprockets are used by Team Vance & Hines/Yamaha Superbike and Team

Sunstar OEM Quality Steel Replacement Sprockets

The same precision quality original equipment sprockets demanded by Japan's leading motorcycle and ATV manufacturers are available as replacement sprockets in America from Sunstar Engineering. Choose from a complete line of rear sprockets featuring Original Equipment designs of heat treated 1045 High Carbon Steel Rear Sprockets for durability, both in stock and a wide range of optional rear ratios for increased performance or economy. For all front sprocket applications there's Sunstar's Chromoly Steel Countershaft Sprockets which are also heat treated for indestructible strength and durability.

RK X-Ring (XSO) Chain

RK's X-Ring chains feature an X-Ring shaped seal. The X-Ring has two lubrication pools and seal points versus the single seal point/pool design of a regular o-ring chain. X-Ring technology offers less torsinal friction, increased high-stress performance, and a 30% longer wear life compared to standard o-ring chains. X-Ring chains offer tremendous value, plus true quality and performance for all but the most demanding high performance applications.

"RX" Ring Cutaway

Links	O-Ring 520XSOZ1	O-Ring 525XSO NEW	O-Ring 530XSO "Gold"	O-Ring GR530SO	O-Ring 630SO	O-Ring 532GSV
1	324-000	—	—	—	—	—
80	324-001	—	325-001	—	326-001	—
82	324-002	—	325-002	—	326-002	—
84	324-003	—	325-003	—	326-003	—
86	324-004	—	325-004	—	326-004	—
88	324-005	—	325-005	—	326-005	—
90	324-006	—	325-006	—	326-006	—
92	324-007	—	325-007	—	326-007	—
94	324-008	—	325-008	—	326-008	—
96	324-009	—	325-009	—	326-009	—
98	324-010	—	325-010	—	326-010	—
100	324-011	—	325-011	—	326-011	—
102	324-012	—	325-012	—	326-012	—
104	324-013	—	325-013	—	326-013	—
106	324-014	—	325-014	—	326-014	—
108	324-015	—	325-015	—	326-015	—
110	324-016	—	325-016	—	326-016	329-036
112	324-017	—	325-017	—	326-017	—
114	324-018	328-405	325-018	—	326-018	329-035
116	324-019	328-406	325-019	—	326-019	—
118	324-020	328-407	325-020	—	326-020	329-035
120	324-021	—	325-021	329-021	326-021	—
130	324-026	—	—	—	—	—
Conn. Links	324-097	—	325-099	—	326-099	329-039
Rivet Links	324-099	—	325-098	329-026	326-098	—
25 Ft. Reel	324-100	—	325-100	—	326-100	—
50 Ft. Reel	324-101	—	325-101	—	326-101	329-037
100 Ft. Reel	324-102	—	325-102	—	—	—

Note: 630SO and 530XSO come with rivet links

RK Chain Close Out

Limited supply.

Links	GY520X	GY530X	GY530X0	532GSV
Conn. Link	—	—	—	329-039
114	—	—	328-140	—
120	—	328-162	—	
Rivet Link	328-275	—	328-147	—
50 Ft Reel	—	—	—	329-037
100 Ft Reel	328-274	328-166	328-146	—

RK Color O-Ring Chain

Model	Color
520XSO	
NB520XSO x 120	Blue
NM520XSO x 120	Green
NR520XSO x 120	Red
530 XSOZ1	
NB530XSOZ1 x 120	Blue
NM530XSOZ1 x 120	Green
NR530XSOZ1 x 120	Red
520 GXW	
NB520GXW x 120	Blue
NM520GXW x 120	Green
NY520GXW x 120	Yellow
ND520GXW x 120	Orange
NR520GXW x 120	Red
525 GXW	
NB525GXW x 120	Blue
NR525GXW x 120	Red
NM525GXW x 120	Green
NY525GXW x 120	Yellow
530GXW	
NB530GXW x 120	Blue
NM530GXW x 120	Green
NY530GXW x 120	Yellow
ND530GXW x 120	Orange
NR530GXW x 120	Red

Motion Pro Chain Breaker & Riveting Tool

Order No. 950-420

See page 505 for Chain Tools.

Fork Seals & Dust Seal Kits

K&S Fork Seal Kits & Dust Seal Kits

Fork Seals and Dust Seals sold in kits. (pairs)

Fork Seal Kits (Fork Seals only)

Dimensions	Order No.
27 x 37 x 7.1mm	516-1004
27 x 39 x 10.5mm	516-1005
30 x 40.5 x 10.5mm	516-1006
30 x 42 x 10.5mm	516-1007
31 x 43 x 10mm	516-1008
31 x 43 x 10.3mm	516-1009
31 x 43 x 12.5mm	516-1010
31.7 x 42 x 7/9mm	516-1062K
32 x 42 x 6.5/9.5mm	516-1063K
32 x 44 x 10.5mm	516-1011
33 x 45 x 10.5/12mm	516-1013
33 x 46 x 10.5mm	516-1014
33 x 46 x 11mm	516-1015
34 x 46 x 10.5mm	516-1016
35 x 46 x 11mm	516-1022
35 x 47 x 10.5mm	516-1021
35 x 48 x 8/9.5mm	516-1017
35 x 48 x 10.5mm	516-1019
35 x 48 x 11mm	516-1020
35 x 48 x 13mm	516-1055
36 x 48 x 8/9.5mm	516-1024
36 x 48 x 10.5mm	516-1025
36 x 48 x 11mm	516-1026
37 x 48 x 10.5mm	516-1027
37 x 48 x 12.5mm	516-1028
37 x 49 x 8mm	516-1029
37 x 50 x 11mm	516-1030
38 x 50 x 8/mm	516-1032
38 x 50 x 10.5mm	516-1031
38 x 52 x 11mm	516-1033
39 x 51 x 8/10mm	516-1034
39 x 52 x 11mm	516-1035
40 x 52 x 8/9.5mm	516-1036
40 x 50 x 7/10.5mm	516-1057K
41 x 53 x 8mm	516-1037
41 x 53 x 8/9.5mm	516-1038
41 x 53 x 8/10.5mm	516-1039
41 x 5 3x 10.5mm	516-1040
41 x 54 x 11mm	516-1041
41.3 x 54 x 13mm	516-1056
43 x 52.7 x 9.5/10.3mm	516-1058K
43 x 54 x 9mm	516-1043
43 x 54 x 9.5mm	516-1045
43 x 54 x 9.5/10mm	516-1049
43 x 54 x 11mm	516-1044
43 x 55 x 8/9.5mm	516-1042
43 x 55 x 9.5/10mm	516-1046
43 x 55 x 10.5mm	516-1047

Fork Seal Kits (Fork Seals only)

Dimensions	Order No.
45 x 57 x 11mm	516-1048
45 x 58 x 8.5/11mm	516-1054
46 x 58 x 9.5/11mm	516-1050
46 x 58 x 10.5mm	516-1070
48 x 57.7 x 9.5/10.3mm	516-1059K
46 x 58 x 10.5/11mm	516-1051
47 x 58 x 10mm	516-1053
48 x 58 x 11mm	516-1071
49 x 60 x 10mm	516-1052
50 x 60 x 7/10.5mm	516-1060K

Dust Seal Kits (Dust Seals only)

Dimensions	Order No.
31.7mm Paioli Forks	516-2062K
32mm Marzocchi Forks	516-2063K
35mm Marzocchi Forks	516-2021K
40mm White Power Forks	516-2057K
41mm KYB Forks	516-2038
41mm Showa Forks	516-2041
43mm KYB Forks	516-2046
43mm Showa Forks	516-2049
43mm White Power Forks	516-2058K
45mm Showa Forks	516-2048
45mm KTM Marzocchi Forks	516-2054K
46mm KYB Forks	516-2050
47mm Showa Forks	516-2053
48mm White Power Forks	516-2059K
48mm KYB Forks	516-2071
49mm Showa Forks	516-2052
50mm White Power Forks	516-2060K
50mm KTM Marzocchi Forks	516-2061K

Fork Seals & Dust Seal Kits

Buell

Model	Year	Fork Seal Kit	Dust Seal Kit
Cyclone M2 with Showa 43mm forks		516-1044	———
Lightning X1 with Showa 41mm forks		516-1041	———
Thunderbolt S3 & S3T w/Showa 41mm		516-1041	———

European Applications

Models with 35mm Forks	516-1021	———
Boge, Ceriani and Telesco Forks, AJS, Bultaco, Can-Am, CZ, Early Husqvarna, Montesa, Moto-Guzzi, Ossa, Penton, Puch, Rokon, KTM models with Betor Forks		
KTM models with 38mm Marzocchi Forks	516-1031	———
Husqvarna, KTM models with 40mm Marzocchi Forks	516-1036	———
Husqvarna models with 45mm Showa Forks	516-1048	———
Husqvarna, KTM models with 45mm Marzocchi Forks	516-1054	———
Triumph models with 43mm KYB Forks	516-1047	———
Triumph models with 45mm Showa Forks	516-1048	———

HARLEY-DAVIDSON®

Dyna Glide w/Showa 39mm forks	91-99	516-1035	———
Dyna Glide FXDWG w/ Showa 41mm	93-99	516-1041	———
FL models (4-speed) w/41mm forks	78-84	516-1056	———
FLT models w/41mm forks	80-83	516-1056	———
FLT models w/ Showa 41mm	84-99	516-1041	———
FX-1200	1978	516-1055	———
FXR models w/Showa 35mm forks	84-87	516-1020	———
FXR models w/Showa 39mm forks	87-00	516-1035	———
FXB-80	80-82	516-1055	———
FXDG	1983	516-1055	———
FXE	81-83	516-1055	———
FXE-1200	73-80	516-1055	———
FXEF	79-80	516-1055	———
FXEF-80	79-81	516-1055	———
FXEF	1985	516-1020	———
FXS	77-79	516-1055	———
FXS-80	79-82	516-1055	———
FXSB	1983	516-1055	———
FXSB	1984	516-1041	———
FXSB	1985	516-1020	———
FXST Softail	84-86	516-1041	———
FXWG Wide Glide	80-84	516-1056	———
FXWG Wide Glide	85-86	516-1041	———
Softail models w/41mm forks	87-on	516-1041	———
Sportster models w/KYB 35mm forks	75-83	516-1055	———
Sportster models w/Showa 35mm forks	84-87	516-1020	———
Sportster models w/Showa 39mm forks	87-03	516-1035	———

Honda Street

MB5-50	1982	516-1005	———
XL70K/K1	74-76	516-1005	———
XL75	77-79	516-1005	———
XL80S	80-85	516-1005	———
CL90 Scrambler 90	67-69	516-1004	———
CT90K1-K6 Trail 90	69-75	516-1004	———
CT90 Trail 90	76-79	516-1004	———
ST90K0/K1/K2 Trail Sport 90	73-75	516-1005	———
CB100K0/K1/K2 Super Sport 100	70-72	516-1004	———
CL100K0/K1/K2 Scrambler 100	70-72	516-1004	———
CL100S/S2/S3 Scrambler 100	71-73	516-1004	———
SL100K0/K1 Moto Sport 100 up to frame 21738	70-71	516-1008	———

Honda Street

Model	Year	Fork Seal Kit	Dust Seal Kit
SL100K1/K2/K3 Moto Sport 100	71-73	516-1010	———
from frame 21739		———	———
XL100K/K1	74-75	516-1010	———
XL100	76-78	516-1010	———
XL100S up to frame 5103463	79-80	516-1010	———
XL100S from frame 5103464	1980	516-1008	———
XL100S	81-85	516-1005	———
CB125S	73-75	516-1004	———
CB125S	76-82	516-1005	———
CB125S	84-85	516-1005	———
CB125TT	1990	516-1008	———
CL125S/S1 Scrambler 125	73-74	516-1004	———
MT125K/K1 Elsinore	74-76	516-1010	———
NX125	88-90	516-1020	———
SL125K0/K1/K2 Moto Sport	71-73	516-1010	———
XL125/K1	74-75	516-1010	———
XL125	76-78	516-1010	———
XL125S up to frame 5005875	79-80	516-1010	———
XL125S from frame 5005876	80-82	516-1009	———
XL125S	1984	516-1009	———
CB175K3-K7 Super Sport 175	69-73	516-1008	———
CL175K7 Scrambler 175	1973	516-1008	———
SL175K0/K1 Moto Sport	70-72	516-1008	———
XL175K/K1/K2	73-75	516-1010	———
XL175	76-78	516-1010	———
CM185T Twinstar	78-79	516-1008	———
XL185S up to frame 5006890	79-80	516-1010	———
XL185S from frame 5006891	80-83	516-1008	———
CB200K	1974	516-1008	———
CB200T	75-76	516-1008	———
CL200 Scrambler	1974	516-1008	———
CM200T Twinstar	80-82	516-1008	———
TR200	86-87	516-1008	———
XL200R	83-84	516-1014	———
CL72 Scrambler 250 **35x47x10.5mm**	62-65	516-1021	———
Use on the following frame numbers: 002002 - 0317995 1000001 - 1008850, 1100001 thru 1109459			
CL72 Scrambler 250 **35x46x10.5mm** Used from frame 1008851	62-65	———	———
CB250 Nighthawk	91-97	516-1008	———
CB250 Nighthawk	99-08	516-1008	———
CM250C Custom	82-83	516-1008	———
CMX250C Rebel	85-87	516-1014	———
CMX250C Rebel	97-09	516-1014	———
CMX250C2 Rebel	99-00	516-1014	———
CMX250CD Rebel	1986	516-1014	———
NX250	88-90	516-1030	———
VTR250 Interceptor	88-90	516-1020	———
XL250K/K1/K2 Moto Sport	72-75	516-1020	———
XL250	1976	516-1020	———
XL250S	80-81	516-1020	———
XL250R	82-83	516-1020	———
XL250R	84-86	516-1019	———
XL250R	1987	516-1020	———
CB350F/F1 Super Sport (4 cyl)	72-74	516-1014	———
CB350G Super Sport	1973	516-1014	———
CB350K4 Super Sport	72-73	516-1014	———
CL350K4/K5 Scrambler	72-73	516-1014	———
CB360	1974	516-1014	———
CB360G	1974	516-1014	———
CB360T	75-76	516-1014	———
CJ360T	76-77	516-1014	———
CL360K/K1 Scrambler	74-75	516-1014	———
CB400A Automatic	1978	516-1015	———
CB400F Super Sport	75-77	516-1015	———
CB400F CB1	89-90	516-1041	516-2041
CB400TI/TII Hawk	78-79	516-1014	———
CB400T Hawk	80-81	516-1015	———
CM400A Automatic	79-81	516-1015	———
CM400C Custom	1981	516-1015	———
CM400E	80-81	516-1015	———
CM400T	79-81	516-1015	———

Fork Seals & Dust Seal Kits

Honda Street

Model	Year	Fork Seal Kit	Dust Seal Kit
CB450K1/K2 Super Sport	68-69	516-1022	—
CB450K3 to frame 4017271	1970	516-1022	—
CB450K3/K4 frame 4017272 up	70-71	516-1020	—
CB450K5/K6/K7 Super Sport	72-74	516-1020	—
CB450SC Nighthawk	82-86	516-1015	—
CB450T Hawk	1982	516-1015	—
CM450A Automatic	82-83	516-1015	—
CM450C Custom	1982	516-1015	—
CM450E	82-83	516-1015	—
CMX450C Rebel	86-87	516-1030	—
CL450K1-K4 Scrambler 450	68-71	516-1022	—
CL450K5/K6/K7	72-74	516-1020	—
CB500/K1/K2	71-73	516-1020	—
CB500T	75-76	516-1020	—
CX500	78-79	516-1014	—
CX500C Custom	1979	516-1014	—
CX500C Custom	1980	516-1015	—
CX500C Custom	81-82	516-1020	—
CX500D Deluxe	1979	516-1014	—
CX500D Deluxe	80-81	516-1015	—
CX500TC Turbo	1982	516-1030	—
FT500 Ascot	82-83	516-1030	—
GB500	89-90	516-1020	—
GL500 Silverwing	81-82	516-1020	—
GL500I Silverwing Interstate	81-82	516-1020	—
VF500C Magna	84-85	516-1030	—
VF500F Interceptor	84-86	516-1030	—
VT500C Shadow	83-84	516-1030	—
VT500FT Ascot	83-84	516-1030	—
XL500R	1982	516-1030	—
XL500S	79-81	516-1020	—
CB550F Super Sport	75-77	516-1020	—
CB550K	74-78	516-1020	—
CB550SC Nighthawk	1983	516-1030	—
CB600F 599	2004	516-1041	516-2041
CB600F 599	2006	516-1041	—
CBR600F Hurricane	87-90	516-1030	—
CBR600F2 Hurricane	91-94	516-1041	516-2041
CBR600F3 Hurricane	95-98	516-1041	516-2041
CBR600F4 Hurricane	99-00	516-1044	—
CBR600F4i Hurricane	01-06	516-1044	—
CBR600RR	03-06	516-1048	—
CBR600SE	1998	516-1041	516-2041
CBR600SJR Replica	1996	516-1041	516-2041
FSC600 Silverwing	2002	516-1039	—
FSC600A Silverwing	03-06	—	—
FSC600D Silverwing	03-06	—	—
VT600C Shadow VLX	88-97	516-1034	—
VT600C Shadow	99-06	516-1034	—
VT600CD Shadow VLX	93-98	516-1034	—
VT600CD Shadow Deluxe	99-06	516-1034	—
VT600CD2 Shadow Deluxe	99-00	516-1034	—
XL600R	83-87	516-1035	—
XL600V Transalp	89-90	516-1041	—
CB650	79-82	516-1020	—
CB650C Custom	80-81	516-1020	—
CB650SC Nighthawk	1982	516-1030	—
CB650SC Nighthawk	83-85	516-1035	—
CX650C Custom	1983	516-1035	—
CX650T Turbo	1983	516-1030	—
GL650 Silverwing	1983	516-1030	—
GL650I Silverwing Interstate	1983	516-1030	—
NT650 Hawk GT	88-91	516-1041	516-2041
NX650	88-89	516-1041	516-2041
XR650L Dual Sport	93-07	516-1044	—
CB700SC Nighthawk	84-86	516-1034	—
VF700C Magna	1984	516-1030	—
VF700C Magna	85-87	516-1035	—
VF700F Interceptor	84-85	516-1035	—
VFR700F/F2 Interceptor	86-87	516-1030	—
VF700S Sabre	84-85	516-1030	—
VT700C Shadow	84-87	516-1035	—

Honda Street

Model	Year	Fork Seal Kit	Dust Seal Kit
CB750 Nighthawk 750	91-93	516-1041	516-2041
CB750 Nighthawk 750	95-03	516-1041	516-2041
CB750A Automatic	76-78	516-1020	—
CB750C Custom	80-82	516-1020	—
CB750F Super Sport	75-80	516-1020	—
CB750F Super Sport	81-82	516-1030	—
CB750K1/K2 up to frame 2093730	71-72	516-1020	—
CB750K2/K3/K4/K5 frame 2093731 UP	72-75	516-1020	—
CB750K SOHC	76-78	516-1020	—
CB750K DOHC	79-82	516-1020	—
CB750L LTD	1979	516-1020	—
CB750SC Nighthawk	82-83	516-1030	—
RVF750R RC45	1994	516-1041	516-2041
VF750C Magna	82-83	516-1030	—
VF750C Magna	1988	516-1035	—
VF750C Magna	94-03	516-1041	516-2041
VF750CD Magna Deluxe	95-96	516-1041	516-2041
VF750C2 Magna Deluxe	97-00	516-1041	516-2041
VF750F Interceptor	83-84	516-1035	—
VF750S Sabre	82-83	516-1030	—
VFR750F Interceptor	1986	516-1030	—
VFR750F	90-97	516-1041	516-2041
VFR750R RC30	1990	516-1044	—
VT750C Shadow	1983	516-1035	—
VT750C Shadow	98-00	516-1038	—
VT750C Shadow	04-06	—	—
VT750CA Shadow	04-06	—	—
VT750CD Shadow Deluxe	98-01	516-1038	—
VT750CD2 Shadow Deluxe	98-01	516-1038	—
VT750CDA/CDB/CDC/CDD	02-03	516-1038	—
Shadow ACE 750 Deluxe			
VT750DC Shadow Spirit 750	2001	516-1041	516-2041
VT750DCA Shadow Spirit 750	03-05	516-1041	516-2041
VT750DCA Shadow Spirit 750	2006	—	—
VT750DCB Shadow Spirit 750	03-05	516-1041	516-2041
VT750DCB Shadow Spirit 750	2006	—	—
PC800 Pacific Coast	89-90	516-1041	516-2041
PC800 Pacific Coast	94-98	516-1041	516-2041
VFR800 Interceptor	02-06	516-1044	—
VFR800A Interceptor ABS	02-06	516-1044	—
VFR800Fi Interceptor	98-01	516-1041	516-2041
VT800C Shadow	1988	516-1035	—
CB900C Custom	80-82	516-1030	—
CB900F Super Sport	81-82	516-1035	—
CB900F 919	02-04	516-1044	—
CB900F 919	2005	—	—
CBR900RR	93-99	516-1048	—
CBR929RR	00-01	516-1044	—
CBR954RR	02-03	516-1044	—
CB1000	94-95	516-1044	—
CB1000C Custom	1983	516-1035	—
CBR1000F Hurricane	87-88	516-1041	516-2041
CBR1000F Hurricane	90-91	516-1041	516-2041
CBR1000F Hurricane	93-96	516-1041	516-2041
CBR1000RR	04-06	516-1044	—
CBX	79-80	516-1020	—
CBX	81-82	516-1035	—
GL1000** (option) Goldwing	75-77	516-1027	—
GL1000 Goldwing	75-77	516-1028	—
GL1000 Goldwing	78-79	516-1028	—
GL1000L** (option) Goldwing	1976	516-1027	—
GL1000L Goldwing LTD	1976	516-1028	—
RVT1000R RC51	00-06	516-1044	—
VF1000F Interceptor	1984	516-1041	516-2041
VF1000R	85-86	516-1041	516-2041
VTR1000F Super Hawk	98-05	516-1041	516-2041
CB1100F Super Sport	1983	516-1035	—
CBR1100XX Blackbird	97-03	516-1044	—
GL1100 Goldwing	80-83	516-1035	—
GL1100A Goldwing Aspencade	82-83	516-1035	—
GL1100I Goldwing Interstate	80-83	516-1035	—
ST1100	91-02	516-1041	516-2041
ST1100A (ABS)	92-95	516-1041	516-2041

Fork Seals & Dust Seal Kits

Honda Street

Model	Year	Fork Seal Kit	Dust Seal Kit
ST1100A (ABS)	96-02	516-1044	—
VF1100C V65 Magna	83-86	516-1041	516-2041
VF1100S V65 Sabre	84-85	516-1041	516-2041
VT1100C Shadow 1100	85-90	516-1041	516-2041
VT1100C Shadow Spirit	98-06	516-1041	516-2041
VT1100C2 Shadow 1100 ACE	95-99	516-1041	516-2041
VT1100C2 Shadow Sabre	00-06	516-1039	—
VT1100C3 Shadow Aero	98-02	516-1041	516-2041
VT1100D2 Shadow 1100 ACE	1999	516-1041	516-2041
VT1100T Shadow 1100 ACE Tourer	98-01	516-1041	516-2041
GL1200 Goldwing	1984	516-1041	516-2041
GL1200A Goldwing Aspencade	84-87	516-1041	516-2041
GL1200I Goldwing Interstate	84-87	516-1041	516-2041
GL1200L Goldwing LTD	1985	516-1041	516-2041
GL1200SEi Goldwing SEi	1986	516-1041	516-2041
ST1300	03-06	516-1048	—
ST1300A (ABS)	03-06	516-1048	—
VTX1300C	04-06	516-1041	516-2041
VTX1300R	05-06	516-1041	516-2041
VTX1300S	03-06	516-1041	516-2041
GL1500 Goldwing	88-90	516-1041	516-2041
GL1500A Goldwing Aspencade	91-00	516-1041	516-2041
GL1500I Goldwing Interstate	91-96	516-1041	516-2041
GL1500SE Goldwing SE	90-00	516-1041	516-2041
GL1500C Valkyrie	97-00	516-1048	516-2048
GL1500C Valkyrie	2003	516-1048	516-2048
GL1500CD Valkyrie	01-03	516-1048	516-2048
GL1500CF Valkyrie Interstate	99-01	516-1048	516-2048
GL1500CT Valkyrie Tourer	97-00	516-1048	516-2048
GL1800 Goldwing	01-06	516-1048	—
GL1800A Goldwing	01-06	516-1048	—
VTX1800C	02-03	516-1048	—
VTX1800C1/C2/C3	2005	—	—
VTX1800F1/F2/F3	2005	—	—
VTX1800N1/N2/N3	04-05	516-1048	—
VTX1800R	02-03	516-1048	—
VTX1800R1/R2/R3	04-05	516-1048	—
VTX1800S	02-03	516-1048	—
VTX1800S1/S2/S3	04-05	516-1048	—

Honda ATV

ATC185S	1983	516-1007	—
ATC200	1983	516-1007	—
ATC200M	84-85	516-1007	—
ATC200S	84-86	516-1007	—
ATC200X	84-87	516-1015	—
ATC250ES	85-87	516-1015	—
ATC250R	81-82	516-1007	—
ATC250R	83-84	516-1020	—
ATC250R	85-86	516-1035	—
ATC250SX	85-87	516-1014	—
ATC350X	85-86	516-1020	—

Honda Dual Sport & Offroad

CR60R	1983	516-1005	—
CR60R	1984	516-1007	—
SL70K/K1	71-73	516-1005	—
XL70K/K1	74-76	516-1005	—
XR70R	97-03	516-1005	—
CRF70F	04-07	516-1005	—
XL75	77-79	516-1005	—
XR75/K	73-78	516-1005	—
CR80R	80-81	516-1007	—
CR80R	82-83	516-1008	—
CR80R	84-86	516-1015	—
CR80R	87-95	516-1020	—
CR80R	96-02	516-1030	—
CR80RB Big Wheel	96-02	516-1030	—
CRF80F	04-07	516-1005	—
XL80S	80-85	516-1005	—
XR80	79-84	516-1005	—

Honda Dual Sport & Offroad

Model	Year	Fork Seal Kit	Dust Seal Kit
XR80R	85-03	516-1005	—
CR85R	03-07	516-1030	—
CR85RB Big Wheel	03-07	516-1030	—
EZ90	91-95	516-1005	—
CRF100F	04-07	516-1005	—
SL100K/K1 Moto Sport up to frame 21738	70-71	516-1008	—
SL100K1/K2/K3 Moto Sport from frame 21739	71-73	516-1010	—
XL100K/K1	74-75	516-1010	—
XL100	76-78	516-1010	—
XL100S up to frame 5103463	79-80	516-1010	—
XL100S from frame 5103464	1980	516-1008	—
XL100S	81-85	516-1005	—
XR100	81-84	516-1005	—
XR100R	85-03	516-1005	—
CT125 Trail 125	1977	516-1010	—
CR125M1	74-75	516-1010	—
CR125M	76-78	516-1020	—
CR125R	79-80	516-1027	—
CR125R	81-82	516-1031	—
CR125R	83-89	516-1044	—
CR125R	90-91	516-1048	516-2048
CR125R	92-93	516-1049	516-2049
CR125R	94-96	516-1046	516-2046
CR125R	97-99	516-1050	516-2050
CR125R	00-06	516-1050	—
MT125K/K1 Elsinore	74-76	516-1010	—
NX125	88-90	516-1020	—
SL125K1/K2 Moto Sport	71-73	516-1010	—
TL125K/K1/K2	73-75	516-1010	—
TL125S Trials	1976	516-1010	—
XL125/K1	74-75	516-1010	—
XL125	76-78	516-1010	—
XL125S up to frame 5005875	79-80	516-1010	—
XL125S from frame 5005876	80-82	516-1009	—
XL125S	1984	516-1009	—
XL125S	1985	516-1008	—
CRF150F	03-07	516-1020	—
MR175 Elsinore	75-77	516-1010	—
SL175/K1 Moto Sport	70-72	516-1008	—
XL175K/K1/K2	73-75	516-1010	—
XL175	76-78	516-1010	—
XL185S up to frame 5006890	79-80	516-1010	—
XL185S from frame 5006891	80-83	516-1009	—
XR185	1979	516-1009	—
TLR200 Reflex	86-87	516-1014	—
TR200 Fatcat	86-87	516-1008	—
XL200R	83-84	516-1014	—
XR200	80-84	516-1008	—
XR200R	81-83	516-1020	—
XR200R	84-88	516-1025	—
XR200R	90-02	516-1025	—
CRF230F	03-07	516-1030	—
CR250R	78-80	516-1027	—
CR250R	1981	516-1040	—
CR250R	1982	516-1047	—
CR250R	83-88	516-1044	—
CR250R	89-91	516-1048	516-2048
CR250R	92-94	516-1049	516-2049
CR250R	1995	516-1046	516-2046
CR250R	1996	516-1050	516-2050
CR250R	97-00	516-1053	516-2053
CR250R	01-07	516-1053	—
CRF250R	04-07	516-1053	—
CRF250X	04-06	516-1053	—
MT250/K/K1 Elsinore	74-76	516-1020	—
MR250 Elsinore	1976	516-1020	—
NX250	88-90	516-1030	—
XL250K/K1/K2 Moto Sport	72-75	516-1020	—
XL250	1976	516-1020	—
XL250S	80-81	516-1020	—

Fork Seals & Dust Seal Kits

Honda Dual Sport & Offroad

Model	Year	Fork Seal Kit	Dust Seal Kit
XL250R	82-83	516-1020	—
XL250R	84-86	516-1019	—
XL250R	1987	516-1020	—
XR250	79-80	516-1020	—
XR250L	91-96	516-1041	—
XR250R	81-82	516-1030	—
XR250R	84-85	516-1044	—
XR250R	86-04	516-1038	—
SL350/K1 Moto Sport	70-71	516-1014	—
SL350K2 Moto Sport	1972	516-1020	—
XL350K/K1	74-75	516-1020	—
XL350	76-78	516-1020	—
XL350R	84-85	516-1035	—
XR350R	83-85	516-1041	—
XR400R	96-04	516-1044	—
CR450R	1981	516-1040	—
CRF450R	02-07	516-1053	—
CRF450X	05-07	516-1053	—
CR480R	1982	516-1047	—
CR480R	1983	516-1044	—
CR500R	84-88	516-1044	—
CR500R	89-91	516-1048	516-2048
CR500R	92-94	516-1049	516-2049
CR500R	1995	516-1046	516-2046
CR500R	96-01	516-1050	516-2050
XL500R	1982	516-1030	—
XL500S	79-81	516-1020	—
XR500	79-80	516-1020	—
XR500R	81-82	516-1030	—
XR500R	83-84	516-1044	—
XL600R	83-87	516-1035	—
XL600V Transalp	89-90	516-1041	—
XR600R	85-00	516-1044	—
NX650	88-89	516-1041	516-2041
XR650L	93-09	516-1044	—
XR650R	00-07	516-1051	—

Kawasaki Street

Model	Year	Fork Seal Kit	Dust Seal Kit
AR50A1	1982	516-1005	—
AR80A1	1982	516-1005	—
G3SS/A/B/C/D-90	69-73	516-1005	—
G3TR90	69-70	516-1005	—
GSSSE100	1975	516-1005	—
KH100B7/B8	76-77	516-1005	—
EL250B2/B3 Eliminator	88-89	516-1026	—
EL250E1/E2/E3/E4	91-94	516-1026	—
EX250E1/E2 Ninja 250R	86-87	516-1020	—
EX250F2/F3/F4 Ninja 250R	88-90	516-1026	—
EX250F6-F19 Ninja 250R	92-05	516-1026	—
EX250F6F Ninja 250R	2006	516-1026	—
KE250B1/B2/B3	77-79	516-1019	—
KL250A1/A2	78-79	516-1019	—
KL250A3/A4/A5	80-82	516-1025	—
KL250C1/C2	83-84	516-1025	—
KL250D2-D22 KLR Dual Sport	85-05	516-1025	—
KLX250H6F Dual Sport	2006	516-1046	—
KZ250D1/D2 LTD & CSR	80-81	516-1010	—
KZ250L1 CSR	1982	516-1008	—
KZ250W1 LTD	1982	516-1008	—
S1A/B/C-250 (2-stroke triple)	73-75	516-1016	—
KH250A5 (2-stroke triple)	1976	516-1016	—
EX305B1 GPz	1983	516-1008	—
KZ305A1/A2 CSR	81-82	516-1015	—
KZ305B1 CSR	1982	516-1015	—
KZ305B2/B3 LTD	87-88	516-1015	—
S2/S2A-350 (2-stroke triple)	72-73	516-1016	—
KZ400A1/A2 Deluxe	77-78	516-1015	—
KZ400B1/B2	78-79	516-1015	—
KZ400C1	1978	516-1015	—
KZ400D/D3/D4	75-77	516-1015	—
KZ400H1 LTD	1979	516-1015	—

Kawasaki Street

Model	Year	Fork Seal Kit	Dust Seal Kit
S3/S3A-400 (2-stroke triple)	74-75	516-1016	—
KH400A3/A4/A5 (2-stroke triple)	76-78	516-1016	—
KZ440A1/A2/A3/A4 LTD	80-83	516-1014	—
KZ440B1/B2	80-81	516-1014	—
KZ440D1-D5 LTD Belt	80-83	516-1014	—
KZ440G1 Belt	1982	516-1014	—
EN450A1-A6 454 LTD	85-00	516-1026	—
EN500A1-A7 Vulcan 500	90-96	516-1026	—
EN500C1-C10 Vulcan 500 LTD	96-05	516-1038	—
EN500C6F Vulcan 500 LTD	2006	516-1038	—
EX500A1-A7	87-93	516-1026	—
EX500D1/D2/D3 Ninja 500	94-96	516-1030	—
EX500D4-D12 Ninja 500R	97-05	516-1030	—
EX500D6F/D7F Ninja 500R	06-07	516-1030	—
H1/H1A/C-500 Mach III	69-72	516-1016	—
H1B-500 2-stroke triple with points Ign.	1972	516-1025	—
H1D/E/F-500 (2-stroke triple)	73-75	516-1025	—
KH500A8 (2-stroke triple)	1976	516-1025	—
KZ550A1/A2/A3/A4	80-83	516-1026	—
KZ550C1/C2/C3/C4 LTD	80-83	516-1026	—
KZ550D1 GPz	1981	516-1026	—
KZ550F1 Spectre	1983	516-1024	—
KZ550F2 LTD	1984	516-1024	—
KZ550H1/H2 GPz	82-83	516-1020	—
KZ550M1 LTD	1983	516-1024	—
ZR550B1/B2/B3/B4 Zephyr	90-93	516-1034	—
ZX550A1/A2 GPz	84-85	516-1020	—
KL600A1 KLR600	1984	516-1031	—
KL600B1/B2 KLR600	85-86	516-1031	—
ZL600A1/A2 Eliminator	86-87	516-1029	—
ZL600B2/B3 Eliminator	96-97	516-1029	—
ZX600A1/A2/A3 Ninja 600R	85-87	516-1029	—
ZX600B1 Ninja 600RX	1987	516-1029	—
ZX600C1-C10 Ninja 600R	88-97	516-1032	—
ZX600D1-D4 Ninja ZX-6	90-93	516-1041	516-2041
ZX600E1-E10 Ninja ZX-6	93-02	516-1041	516-2041
ZX600E11/E12 ZZR600	03-04	516-1041	516-2041
ZX600F1/F2/F3 Ninja ZX-6R	95-97	516-1037	—
ZX600G1/G2 Ninja ZX-6R	98-99	516-1070	—
ZX600J1/J2/J3 Ninja ZX-6R	00-02	516-1070	—
ZX600J4 ZZR600	2005	516-1070	—
ZX600K1/K1L Ninja ZX-6RR	2003	516-1039	—
ZX600M1 Ninja ZX-6RR	2004	516-1039	—
ZX600N1 Ninja ZX-6RR	2005	516-1041	—
ZX600N6F Ninja ZX-6RR	2006	—	—
ZX636B1/B2 Ninja ZX-6R	03-04	516-1039	—
ZX636C1 Ninja ZX-6R	2005	—	—
ZX636C6F Ninja ZX-6R	2006	—	—
ZX636D6F Ninja ZX-6R	2006	—	—
EJ650A2/A3 W650 Twin	00-01	516-1034	—
KL650A1-A19 KLR650	87-05	516-1031	—
KL650A6F/A7F KLR650	06-07	516-1031	—
KL650B2 Tengai KLR	1990	516-1031	—
KLX650C1-C4 Dual Sport	93-96	516-1046	516-2046
KZ650B1/B2/B2A/B3	77-79	516-1025	—
KZ650C1/C2/C3 Custom	77-79	516-1025	—
KZ650D1/D1A/D2 SR	78-79	516-1025	—
KZ650E1 LTD	1980	516-1025	—
KZ650F1	1980	516-1025	—
KZ650H1/H2/H3 CSR	81-83	516-1024	—
KZ700A1	1984	516-1024	—
VN700A1 Vulcan	1985	516-1033	—
ZN700A1/A2 LTD	84-85	516-1024	—
H2/A/B/C-750 (2-stroke triple)	72-75	516-1025	—
KZ750B1/B2/B3/B4 (2cyl.)	76-79	516-1025	—
KZ750E1/E2/E3	80-82	516-1024	—
KZ750F1 LTD	1983	516-1026	—
KZ750G1 LTD (2cyl.)	1980	516-1025	—
KZ750H1/H2/H3/H4 LTD	80-83	516-1024	—
KZ750K1/K2 LTD (2cyl.)	83-84	516-1024	—

Fork Seals & Dust Seal Kits

Kawasaki Street

Model	Year	Fork Seal Kit	Dust Seal Kit
KZ750L3	1983	516-1024	—
KZ750M1 CSR (2cyl.)	1982	516-1024	—
KZ750N1/N2 Spectre	82-83	516-1026	—
KZ750R1 GPz	1982	516-1024	—
VN750A1-A21 Vulcan 750	86-05	516-1033	—
VN750A6F Vulcan 750	2006	516-1033	—
ZR750C1/C2/C3 Zephyr	91-93	516-1038	—
ZR750F2 ZR-7	2000	516-1039	—
ZR750H1/H2/H3 ZR-7S	01-03	516-1039	—
ZR750K1/K6F Z750S	05-06	516-1039	—
ZX750A1/A2/A3 GPz	83-85	516-1029	—
ZX750E1/E2 GPz Turbo	84-85	516-1029	—
ZX750F1-F4 Ninja 750R	87-90	516-1032	—
ZX750H1/H2 Ninja ZX-7	89-90	516-1046	—
ZX750J1/J2 Ninja ZX-7	91-92	516-1046	—
ZX750K1/K2 Ninja ZX-7R	91-92	516-1038	—
ZX750L1/L2/L3 Ninja ZX-7	93-95	516-1038	—
ZX750M1/M2 Ninja ZX-7R	93-94	516-1038	—
ZX750N1/N2 Ninja ZX-7RR	96-97	516-1046	—
ZX750P1-P8 Ninja ZX-7R	96-03	516-1046	—
VN800A1-A11 Vulcan 800	95-05	516-1041	516-2041
VN800B1-B10 Vulcan Classic	96-05	516-1041	516-2041
VN800C1/C2 Vulcan Drifter	99-00	516-1041	516-2041
VN800E1-E6F Vulcan Drifter	01-06	516-1041	516-2041
KZ900A4/A5	76-77	516-1025	—
KZ900B1 LTD	1976	516-1025	—
Z1/A/B-900	73-75	516-1025	—
ZL900A1/A2 Eliminator	85-86	516-1033	—
ZX900A1/A2/A3 Ninja	84-86	516-1032	—
ZX900B1-B4 Ninja ZX-9R	94-97	516-1037	—
ZX900C1/C2 Ninja ZX-9R	98-99	516-1070	—
ZX900E1/E2 Ninja ZX-9R	00-01	516-1070	—
ZX900F1/F2 Ninja ZX-9R	02-03	516-1070	—
KZ1000A1/A2	77-78	516-1025	—
KZ1000A3/A3A/A4 MKII	79-80	516-1025	—
KZ1000B1/B2/B3/B4 LTD	77-80	516-1025	—
KZ1000C1-C4 Police	78-81	516-1031	—
KZ1000D1 Z1R	1978	516-1025	—
KZ1000D3 Z1R	1980	516-1025	—
KZ1000E1/E2 Shaft ST	79-80	516-1036	—
KZ1000G1 LTD Classic	1980	516-1025	—
KZ1000J1/J2/J3	81-83	516-1032	—
KZ1000K1/K2 LTD	81-82	516-1032	—
KZ1000M1/M2 CSR	81-82	516-1032	—
KZ1000P1-P21 Police	82-02	516-1032	—
KZ1000P24 Police	2005	516-1032	—
KZ1000R1/R2 Replica	82-83	516-1032	—
ZG1000A1-A13 Concours	86-98	516-1038	—
ZG1000A14-A20 Concours	99-05	516-1039	—
ZG1000A6F Concours	2006	516-1039	—
ZL1000A1 Eliminator	1987	516-1033	—
ZR1000A1/A2/A3 Z1000	03-05	516-1041	516-2041
ZX1000A1/A2 Ninja 1000R	86-87	516-1036	—
ZX1000B1/B2/B3 Ninja ZX-10	88-90	516-1038	—
ZX1000C1/C2 Ninja ZX-10R	04-05	516-1046	—
ZX1000D6F Ninja ZX-10R	2006	—	—
KZ1100A1/A2/A3 Shaft	81-83	516-1032	—
KZ1100B1/B2 GPz	81-82	516-1032	—
KZ1100D1/D2 Spectre	82-83	516-1032	—
KZ1100L1 LTD	1983	516-1032	—
ZN1100B1/B2 LTD	84-85	516-1032	—
ZR1100A1/A2/A3	92-94	516-1046	—
ZR1100C3/C4 ZRX1100	99-00	516-1046	—
ZX1100A1/A2 GPz	83-84	516-1029	—
ZX1100C Ninja ZX-11	90-93	516-1046	—
ZX1100D1-D9 Ninja ZX-11	93-01	516-1046	—
ZX1100E1/E2/E3 GPz	95-97	516-1038	—
ZX1100F1 GPz (ABS)	1996	516-1038	—
ZG1200A1 Voyager XII	1986	516-1041	516-2041
ZG1200B Voyager XII	87-03	516-1041	516-2041
ZR1200A1-A5 ZRX1200	01-05	516-1046	—

Kawasaki Street

Model	Year	Fork Seal Kit	Dust Seal Kit
ZX1200A1/A2 Ninja ZX-12R	00-01	516-1046	—
ZX1200B1-B4 Ninja ZX-12R	02-05	516-1046	—
ZX1200C1-C4 ZZR1200	02-05	516-1046	—
KZ1300A1/A2/A3/A4	79-82	516-1038	—
KZ1300B2 Touring	1980	516-1038	—
ZN1300A1-A6 Voyager	83-87	516-1038	—
VN1500A1-A9 Vulcan 88	87-95	516-1041	516-2041
VN1500A10-A12 Vulcan	96-98	516-1041	516-2041
VN1500B1-B4 Vulcan 88SE	87-90	516-1041	516-2041
VN1500C3/C4 Vulcan 1500L	96-97	516-1041	516-2041
VN1500D1-D3 1500 Classic	96-98	516-1041	516-2041
VN1500E1-E8 Vulcan Classic	98-05	516-1041	516-2041
VN1500G1 Vulcan Nomad	1999	516-1041	516-2041
VN1500G1A Vulcan Nomad	1999	516-1041	516-2041
VN1500G2A Vulcan Nomad	2000	516-1041	516-2041
VN1500J1/J2 Vulcan Drifter	99-00	516-1041	516-2041
VN1500L1-L5 Nomad FI	00-04	516-1041	516-2041
VN1500N1 Vulcan Classic FI	2000	516-1041	516-2041
VN1500P1/P2 Mean Streak	02-03	516-1044	—
VN1500R3/R4 Vulcan Drifter	03-04	516-1041	516-2041
VN1600A1/A2 Vulcan 1600 Classic	03-04	516-1046	—
VN1600A3/A6F Vulcan 1600 Classic	05-06	516-1046	—
VN1600E6F Vulcan 1600 Classic	2006	516-1046	—
VN1600B1/B2 Vulcan 1600 Mean Streak	04-05	—	—
VN1600B6F Vulcan 1600 Mean Streak	2006	—	—
VN1600F6F Vulcan 1600 Mean Streak	2006	—	—
VN1600D1/D6F Vulcan 1600 Nomad	05-06	516-1046	—
VN1600G6FVulcan 1600 Nomad	2006	516-1046	—

Kawasaki ATV

KLT110A2/A3	85-86	516-1007	—
KLT160A1	1985	516-1007	—
KLT185A1/A2 Bayou	86-87	516-1007	—
KXT250A1/A2 Tecate 3	84-85	516-1025	—
KXT250B1/B2 Tecate 3	86-87	516-1040	—

Kawasaki Dual Sport & Offroad

KX60A1/A2	83-84	516-1007	—
KX60B1-B19	85-03	516-1007	—
KX65A1-A7F	00-07	516-1015	—
KD80/A2	75-76	516-1005	—
KD80M1-M8	80-87	516-1005	—
KD80N1/N2/N3	88-90	516-1005	—
KDX80A1/A2/B2/B3	80-83	516-1007	—
KDX80C1/C2/C3/C4/C5	84-88	516-1007	—
KX80A1/A2/C1	79-81	516-1007	—
KX80C2	1982	516-1008	—
KX80E1	1983	516-1014	—
KX80E2/E3	84-85	516-1013	—
KX80G1/G2	86-87	516-1019	—
KX80J2 Big Wheel	1987	516-1019	—
KX80L1/L2/L3	88-90	516-1019	—
KX80N1/N2/N3 Big Wheel	88-90	516-1019	—
KX80R1	1991	516-1019	—
KX80R2/R3/R4/R5/R6/R7	92-97	516-1031	—
KX80T1 Big Wheel	1991	516-1019	—
KX80T2/T3/T4	92-94	516-1024	—
KX80W1/W2/W3	98-00	516-1024	—
KX85A1-A7F	01-07	516-1024	—
G3TR90	69-70	516-1005	—
MC1/MC1A/MC1B-90	73-75	516-1005	—
G3TRA100	1971	516-1005	—
G31M/G31MA-100	70-71	516-1006	—
G4TR/A-100 Trail Boss	70-71	516-1006	—
G4TRB/C/D/E-100	72-75	516-1006	—
G5/G5A/G5B/G5C-100	72-75	516-1006	—
KD100M1/M2/M3/M4	76-79	516-1005	—
KE100A5-A10	76-81	516-1006	—
KE100B1-B20	82-01	516-1006	—

Fork Seals & Dust Seal Kits

Kawasaki Dual Sport & Offroad

Model	Year	Fork Seal Kit	Dust Seal Kit
KM100A1-A7	76-81	516-1005	—
KV100A7	1976	516-1006	—
KX100B5/B6/B7	95-97	516-1024	—
KX100C1/C2/C3	98-00	516-1024	—
KX100D1-D7F	01-07	516-1024	—
KLX110A1/A2/A3/A4/A6F/A7F	02-07	516-1007	—
C2SS120/C2TR-120	67-68	516-1005	—
C2SS120/C2TR-120	1969	516-1006	—
F6/A/B-125	71-73	516-1006	—
KD125/A2/A3/A4/A5	75-79	516-1010	—
KS125/A	74-75	516-1010	—
KE125A3-A10	76-83	516-1010	—
KLX125A1/A2/A3	03-05	516-1007	—
KLX125B1/B2/B3	03-05	516-1007	—
KX125A/A3	74-76	516-1010	—
KX125A4/A5	78-79	516-1025	—
KX125A6/A7	80-81	516-1031	—
KX125B1	1982	516-1040	—
KX125B2/C1/D1/E1/E2	83-87	516-1047	—
KX125F1	1988	516-1046	—
KX125G1	1989	516-1051	—
KX125H1	1990	516-1038	516-2038
KX125H2/J1/J2/K1/K2	91-95	516-1046	516-2046
KX125K3/K4/K5/L1	96-99	516-1050	516-2050
KX125L2/L3	00-01	516-1050	—
KX125L4/M1/M2/M3	02-05	516-1071	516-2071
F3-175 Bushwhacker	68-70	516-1006	—
F7/A/B/C/D-175 Enduro	71-75	516-1006	—
KD175A1/A2/A3/A4	76-79	516-1011	—
KDX175A1/A2/A3	80-82	516-1025	—
KE175B1/B2/B3	76-78	516-1011	—
KE175D2/D3/D4/D5	80-83	516-1020	—
KDX200A1/A2/A3	83-85	516-1031	—
KDX200C1/C2/C3	86-88	516-1047	—
KDX200E1/E2/E3/E4	89-92	516-1047	—
KDX200E5/E6	93-94	516-1038	516-2038
KDX200H1-H11	95-05	516-1046	—
KDX200H6F	2006	516-1046	—
KDX220A4-A12	97-05	516-1046	—
F4-250	68-70	516-1016	—
F8/F8A-250	71-72	516-1016	—
F11/A/B-250	73-75	516-1016	—
F11M250	1973	516-1018	—
KDX250A1	1980	516-1031	—
KDX250B1/B2/B3/B4	81-84	516-1031	—
KDX250D1/D2/D3/D4	91-94	516-1046	516-2046
KE250B1/B2/B3	77-79	516-1019	—
KL250A1/A2	78-79	516-1019	—
KL250A3/A4/A5	80-82	516-1025	—
KL250C1/C2	83-84	516-1025	—
KL250D2-D22 KLR	85-05	516-1025	—
KLX250A1/A2	79-80	516-1025	—
KLX250D2/D3/D4	94-96	516-1046	516-2046
KLX250H6F Dual Sport	2006	516-1046	—
KT250A/A2 Trials	75-76	516-1016	—
KX250/A/A3	74-76	516-1025	—
KX250A4	1978	516-1025	—
KX250A5/A6/A7	79-81	516-1031	—
KX250B1	1982	516-1040	—
KX250C1/C2/D1/D2/E1	83-87	516-1047	—
KX250F1	1988	516-1046	—
KX250G1	1989	516-1051	—
KX250H1	1990	516-1038	516-2038
KX250H2/J1/J2/K1/K2	91-95	516-1046	516-2046
KX250K3/K4/K5/L1/L2/L3	96-01	516-1050	516-2050
KX250L4/M1/M2	02-04	516-1071	516-2071
KX250R1/R6F/R7F	05-07	—	516-2071
KX250N1 KX250F	2004	516-1071	516-2071

Kawasaki Dual Sport & Offroad

Model	Year	Fork Seal Kit	Dust Seal Kit
KX250N2 KX250F	2005	—	—
KX250N6F/N7F KX250F	06-07	—	—
KLX300A2-A10	97-05	516-1046	—
KLX300A6F/A7F	06-07	516-1046	—
F5/F5A 350 Bighorn	70-71	516-1016	—
F9/A/B/C350	72-75	516-1016	—
KDX400A1/A2	79-80	516-1031	—
KLX400A1 KLX400SR Dual	2003	516-1052	516-2052
KX400B1 KLX400R Offroad	2003	516-1052	516-2052
KX400/A2	75-76	516-1025	—
KDX420B1	1981	516-1031	—
KX420A1/A2	80-81	516-1031	—
KDX450 A1	1982	516-1031	—
F12MX450	1973	516-1016	—
KX450	1974	516-1016	—
KX450D6F/D7F	06-07	—	516-2071
KX500A1/A2	83-84	516-1047	—
KX500B1/B2	85-86	516-1047	—
KX500C1	1987	516-1047	—
KX500D1	1988	516-1046	—
KX500E1	1989	516-1051	—
KX500E2	1990	516-1038	516-2038
KX500E3/E4/E5/E6/E7/E8	91-96	516-1046	516-2046
KX500E9-E16	97-04	516-1050	516-2050
KL600A1 KLR600	1984	516-1031	—
KL600B1/B2 KLR600	85-86	516-1031	—
KL650A1-A19 KLR650	87-05	516-1031	—
KL650A6F/A7F KLR650	06-07	516-1031	—
KL650B2 Tengai KLR	1990	516-1031	—
KLX650A1/A2/A3 KLX650R	93-95	516-1046	516-2046
KLX650C1-C4 Dual Sport	93-96	516-1046	516-2046
KLX650D1 KLX650R	1996	516-1046	516-2046

KTM

Model	Year	Fork Seal Kit	Dust Seal Kit
50 SXR Adventure	97-99	516-1062K	516-2062K
50 SXR Pro Junior	97-99	516-1062K	516-2062K
50 SXR Pro Senior	97-99	516-1062K	516-2062K
50 SX Mini-Adventure	00-01	516-1062K	516-2062K
50 SX Junior-Adventure	00-01	516-1062K	516-2062K
50 SX Senior-Adventure	00-01	516-1062K	516-2062K
50 SX Pro Junior LC	02-04	516-1063K	516-2063K
50 SX Pro Senior LC	02-04	516-1063K	516-2063K
50 Mini-Adventure	02-04	516-1063K	516-2063K
50 Junior-Adventure	02-03	516-1063K	516-2063K
50 Senior-Adventure	02-04	516-1063K	516-2063K
60 SX	98-01	516-1062K	516-2062K
65 SX	98-01	516-1062K	516-2062K
65 SX	02-06	516-1021	516-2021K
80 MX Pro-mini	1986	516-1021	516-2021K
80/85 MX Super-mini	1986	516-1021	516-2021K
80/85 MX Pro-Lever	1986	516-1031	———
85SX	03-06	516-1058K	———
125 DXC	90-92	516-1057K	516-2057K
125 EGS	90-95	516-1057K	516-2057K
125 EGS	95-97	516-1054	516-2054K
125 EGS	1999	516-1060K	516-2060K
125 EXC	90-95	516-1057K	516-2057K
125 EXC	95-97	516-1054	516-2054K
125 EXC	1999	516-1060K	516-2060K
125 EXC	00-02	516-1058K	516-2058K
125 GS	1983	516-1031	———
125 GS	85-86	516-1057K	516-2057K
125 MX	83-84	516-1036	———
125 MX	85-86	516-1057K	516-2057K
125 MX	90-92	516-1057K	516-2057K
125 MX	1994	516-1057K	516-2057K
125 MX	1999	516-1060K	516-2060K
125 MX Enduro	87-90	516-1057K	516-2057K
125 MX Enduro	1988	516-1036	———
125 MXC	83-84	516-1036	———
125 MXC	85-86	516-1057K	516-2057K
125 MXC	00-02	516-1058	516-2058K
125 SGP-GS	00-02	516-1058K	516-2058K
125 SX	1993	516-1057K	516-2057K
125 SX	1995	516-1057K	516-2057K
125 SX	95-97	516-1054	516-2054K
125 SX	1999	516-1060K	516-2060K
125 SX	00-02	516-1058K	516-2058K
125 SX	02-06	516-1059K	516-2059K
200 SX/MXC/EXC/EGS	1999	516-1060K	516-2060K
200 SX/MXC/EXC/SGP-GS	00-02	516-1058K	516-2058K
200 SX/MXC/EXC Racing	02-06	516-1059K	516-2059K
240 MX Enduro	87-89	516-1057K	516-2057K
240 MX Enduro	1988	516-1036	———
240 MX/MXC/GS	1986	516-1057K	516-2057K
250 DXC	90-92	516-1057K	516-2057K
250 EXC/EGS	90-95	516-1057K	516-2057K
250 EXC/EGS	95-96	516-1054	516-2054K
250 EXC/EGS	1997	516-1061K	516-2061K
250 EXC/EGS	98-99	516-1060K	516-2060K
250 EXC/EGS	00-02	516-1058K	516-2058K
250 EXC Racing	2002	516-1059K	516-2059K
250 GS	1983	516-1031	———
250 GS	1984	516-1036	———
250 GS	85-86	516-1057K	516-2057K
250 MX	83-84	516-1036	———
250 MX	85-86	516-1057K	516-2057K
250 MX	90-92	516-1057K	516-2057K
250 MX Enduro	87-89	516-1057K	516-2057K
250 MX Enduro	1988	516-1036	———
250 MXC	83-84	516-1036	———
250 MXC	85-86	516-1057K	516-2057K
250 MXC	1994	516-1057K	516-2057K
250 MXC	95-96	516-1054	516-2054K
250 MXC	1997	516-1061K	516-2061K
250 MXC	98-99	516-1060K	516-2060K

KTM

Model	Year	Fork Seal Kit	Dust Seal Kit
250 MXC	00-02	516-1058K	516-2058K
250 MXC Racing	2002	516-1059K	516-2059K
250 SX	93-95	516-1057K	516-2057K
250 SX	95-96	516-1054	516-2054K
250 SX	1997	516-1061K	516-2061K
250 SX	98-99	516-1060K	516-2060K
250 SX	00-02	516-1058K	516-2058K
250 SX Racing	02-06	516-1059K	516-2059K
300 DXC	90-92	516-1057K	516-2057K
300 EXC/EGS	90-95	516-1057K	516-2057K
300 EXC/EGS	95-96	516-1054	516-2054K
300 EXC/EGS	1997	516-1061K	516-2061K
300 EXC/EGS	98-99	516-1060K	516-2060K
300 EXC/EGS	00-02	516-1058K	516-2058K
300 EXC Racing	2002	516-1059K	516-2059K
300 GS	1986	516-1057K	516-2057K
300 MX	1986	516-1057K	516-2057K
300 MX	90-92	516-1057K	516-2057K
300 MXC	1986	516-1057K	516-2057K
300 MXC	94-95	516-1057K	516-2057K
300 MXC	95-96	516-1054	516-2054K
300 MXC	1997	516-1061K	516-2061K
300 MXC	98-99	516-1060K	516-2060K
300 MXC	00-02	516-1058K	516-2058K
300 MXC Racing	2002	516-1059K	516-2059K
300 SX	93-95	516-1057K	516-2057K
300 SX	95-96	516-1054	516-2054K
300 SX	1997	516-1061K	516-2061K
300 SX	98-99	516-1060K	516-2060K
300 SX	00-02	516-1058K	516-2058K
300 SX Racing	2002	516-1059K	516-2059K
300 TXC	1992	516-1057K	516-2057K
350 EXC/EGS	90-91	516-1057K	516-2057K
350 EXC/EGS	94-95	516-1057K	516-2057K
350 GSXC	1985	516-1057K	516-2057K
350 LC4 EXC	1994	516-1057K	516-2057K
350 MX	85-86	516-1057K	516-2057K
350 MX	90-91	516-1057K	516-2057K
350 MX	1994	516-1057K	516-2057K
350 MX Enduro	1987	516-1057K	516-2057K
350 MXC/GS	85-86	516-1057K	516-2057K
350 SX	1994	516-1057K	516-2057K
350 SX/Super Competition	1995	516-1057K	516-2057K
360 SX/EXC/MXC/EGS	1996	516-1054	516-2054K
360 SX/EXC/MXC/EGS	1997	516-1061K	516-2061K
380 SX/EXC/MXC/EGS	98-99	516-1060K	516-2060K
380 SX/EXC/MXC/EGS	00-02	516-1058K	516-2058K
380 SX/MXC/EXC Racing	2002	516-1059K	516-2059K
400 Duke	1995	516-1057K	516-2057K
400 EGS	94-95	516-1057K	516-2057K
400 EGSE	1997	516-1057K	516-2057K
400 EX	1995	516-1054	516-2054K
400 EX	1995	516-1057K	516-2057K
400 EXC	93-95	516-1057K	516-2057K
400 EXC	1995	516-1054	516-2054K
400 EXC Racing USA	2000	516-1058K	516-2058K
400 EXC Racing	00-02	516-1058K	516-2058K
400 LC4/Racing	98-00	516-1060K	516-2060K
400 LC4 EXC	93-94	516-1057K	516-2057K
400 LSE	1997	516-1057K	516-2057K
400 MXC	1995	516-1054	516-2054K
400 MXC	1995	516-1057K	516-2057K
400 MXC Racing	01-02	516-1058K	516-2058K
400 RXC	94-95	516-1057K	516-2057K
400 RXCE	94-95	516-1057K	516-2057K
400 RXCE	97-98	516-1057K	516-2057K
400 SX	1994	516-1057K	516-2057K
400 SX	00-01	516-1058K	516-2058K
400 SX	2002	516-1059K	516-2059K
400 SX Super Competition	1996	516-1054	516-2054K
400 SX Super Competition	95-96	516-1057K	516-2057K
400 SX Super Competition	97-98	516-1060K	516-2060K

Fork Seals & Dust Seal Kits

KTM

Model	Year	Fork Seal Kit	Dust Seal Kit
400 SX Racing	00-02	516-1058K	516-2058K
400 SXC	1999	516-1060K	516-2060K
420 GS/MXC	1984	516-1057K	516-2057K
440 SX/EXC/MXC	94-95	516-1057K	516-2057K
440 SX/EXC/MXC	1995	516-1054	516-2054K
495 MX/MXC	1984	516-1057K	516-2057K
500 DXC/EGS	90-92	516-1057K	516-2057K
500 EC	1985	516-1057K	516-2057K
500 EXC	90-92	516-1057K	516-2057K
500 EXC	1995	516-1057K	516-2057K
500 EXC	1995	516-1054	516-2054K
500 GS	84-85	516-1057K	516-2057K
500 LC4 MX/EXC	1989	516-1057K	516-2057K
500 LC4 DXC/EXC/EGS	90-92	516-1057K	516-2057K
500 LC4 MX -Enduro	1988	516-1057K	516-2057K
500 MX	84-92	516-1057K	516-2057K
500 MX	1994	516-1057K	516-2057K
500 MX/MX Enduro	88-89	516-1036	———
500 MX Enduro	1987	516-1057K	516-2057K
500 MX Enduro	1989	516-1057K	516-2057K
500 MX LC4	90-91	516-1057K	516-2057K
500 MXC	85-86	516-1057K	516-2057K
500 MXC	1995	516-1054	516-2054K
500 SX	1993	516-1057K	516-2057K
500 SX	1995	516-1054	516-2054K
520 EXC	00-01	516-1058K	516-2058K
520 EXC	2002	516-1059K	516-2059K
520 EXC Racing	00-02	516-1058K	516-2058K
520 EXC Racing	2002	516-1059K	516-2059K
520 MXC	2002	516-1059K	516-2059K
520 MXC Racing	00-02	516-1058K	516-2058K
520 MXC Racing	2002	516-1059K	516-2059K
520 SX	00-01	516-1058K	516-2058K
520 SX	2002	516-1059K	516-2059K
520 SX Racing	00-02	516-1058K	516-2058K
520 SX Racing	2002	516-1059K	516-2059K
525 EXC Racing	03-06	516-1059K	516-2059K
525 MXC Racing	03-06	516-1059K	516-2059K
525 SX Racing	03-06	516-1059K	516-2059K
540 DXC	90-91	516-1057K	516-2057K
540 DXC	1994	516-1057K	516-2057K
540 SXC	1999	516-1060K	516-2060K
550 DXC	1992	516-1057K	516-2057K
550 EXC	1992	516-1057K	516-2057K
550 EXC	1995	516-1057K	516-2057K
550 EXC	1995	516-1054	516-2054K
550 MX	1992	516-1057K	516-2057K
550 MXC	93-96	516-1057K	516-2057K
550 MXC	95-96	516-1054	516-2054K
550 SX	1995	516-1057K	516-2057K
550 SX	1995	516-1054	516-2054K
600 DXC/EGS	90-92	516-1057K	516-2057K
600 Enduro LC4	1989	516-1057K	516-2057K
600 EXC	90-93	516-1057K	516-2057K
600 GS	1984	516-1057K	516-2057K
600 LC4	1997	516-1060K	516-2060K
600 LC4 DXC/EGS	90-92	516-1057K	516-2057K
600 LC4 EXC	89-93	516-1057K	516-2057K
600 LC4 MX	89-91	516-1057K	516-2057K
600 LC4 MX -Enduro	1988	516-1057K	516-2057K
600 MX	1984	516-1057K	516-2057K
600 MX	89-91	516-1057K	516-2057K
620 DUKE	95-97	516-1057K	516-2057K
620 EGSE	1997	516-1057K	516-2057K
620 EGSE Adventure	1997	516-1060K	516-2060K
620 EXC / EGS	94-95	516-1057K	516-2057K
620 LC4 Competiton	98-00	516-1060K	516-2060K
620 LC4 EXC	1994	516-1057K	516-2057K
620 LSE	1997	516-1057K	516-2057K
620 RXC	1996	516-1054	516-2054K
620 RXC/RXC LC4	94-95	516-1057K	516-2057K
620 RXCE	94-95	516-1057K	516-2057K

KTM

Model	Year	Fork Seal Kit	Dust Seal Kit
620 RXCE	97-98	516-1057K	516-2057K
620 SC	97-98	516-1060K	516-2060K
620 SX	1994	516-1057K	516-2057K
620 SX	97-98	516-1060K	516-2060K
620 SX	1999	516-1060K	516-2060K
620 SX, Super Competition	95-96	516-1057K	516-2057K
620 SX, Super Competition	1996	516-1054	516-2054K
620 SX Super Competition	97-98	516-1060K	516-2060K
640 Adventure R	1999	516-1060K	516-2060K
640 DUKE	2000	516-1058K	516-2058K
640 LC4	98-00	516-1060K	516-2060K
640 LC4 E / LC4 Super Moto	00-01	516-1058K	516-2058K
640 LC4 R	1999	516-1060K	516-2060K
640 LC4 R Adventure	2000	516-1060K	516-2060K
640 LC4 Super Moto	1999	516-1060K	516-2060K

Suzuki Street

RV90L/M/A/B Rover	74-77	516-1005	———
TC90	1970	516-1006	———
TC90R/J	71-72	516-1006	———
TS90	1970	516-1006	———
TS90R/J	71-72	516-1006	———
B100	65-67	516-1006	———
TC100K/L/M/A Blazer	73-77	516-1006	———
TS100K/L/M/A Honcho	73-77	516-1006	———
TS100C/N	78-79	516-1005	———
TS100T/X	80-81	516-1007	———
B105P	65-67	516-1006	———
KT120	65-67	516-1006	———
DR125SER/SES/SET Dual Sport	94-96	516-1020	———
GN125Z/D	82-83	516-1011	———
GN125EM-EV	91-97	516-1011	———
SP125Z/D	82-83	516-1010	———
SP125G/H/J	86-88	516-1020	———
TC125J/K/L/M/A/B Prospector	72-77	516-1006	———
TS125R/J/K/L/M/B Duster	71-77	516-1006	———
TS125C/N	78-79	516-1007	———
TS125T/X	80-81	516-1010	———
GT185K/L Adventurer	73-74	516-1006	———
GT185M/A/B	75-77	516-1007	———
TC185L/M/A/B Ranger	74-77	516-1006	———
TS185R/J/K/L/M/A Sierra	71-76	516-1006	———
TS185B/C	77-78	516-1006	———
TS185N/T/X	79-81	516-1011	———
DR200SET-SEK7 Dual Sport	96-07	516-1020	———
SP200G/H/J	86-88	516-1020	———
T200	65-69	516-1006	———
TC200	65-69	516-1006	———
DR250SL-SES Dual Sport	90-95	516-1044	———
GN250Z/D	82-83	516-1014	———
GN250F	1985	516-1014	———
GN250J	1988	516-1014	———
GS250TT/TX	80-81	516-1014	———
GT250K/L/M/A/B Hustler	73-77	516-1014	———
GZ250X/Y/K1-K7	99-07	516-1030	———
SP250Z/D	82-83	516-1020	———
SP250F	1985	516-1020	———
T250 (T20)	1969	516-1016	———
T250II/R/J	70-72	516-1016	———
TC250	1969	516-1016	———
TS250I Savage	1969	516-1019	———
TS250II Savage	1970	516-1016	———
TS250R/J/K/L/M/A	71-76	516-1016	———
TS250B/C/N	77-79	516-1020	———
TS250T/X	80-81	516-1024	———
GS300LZ/LD	82-83	516-1014	———
GS300LF	1985	516-1014	———
T305	1969	516-1016	———
TC305 Scrambler	1969	516-1016	———
DR350SL-SEX Dual Sport	90-99	516-1044	———
T350I/II/R/J	69-72	516-1016	———

Suzuki Street

Model	Year	Fork Seal Kit	Dust Seal Kit
SP370C/N	78-79	516-1024	—
GT380J/K/L/M/A/B Sebring	72-77	516-1014	—
DR-Z400SMK5-K7 Supermotard	05-07	516-1053	—
DR-Z400SY-SK7 Dual Sport	00-07	516-1052	516-2052
GN400T/XT/XX	80-81	516-1020	—
GN400TX/TZ	81-82	516-1020	—
GS400B/XB/C/XC	77-78	516-1015	—
GS400M/N/P Bandit	91-93	516-1038	—
SP400T Dual Sport	1980	516-1024	—
TS400J-B Apache	71-77	516-1016	—
GS425N/EN/LN	1979	516-1014	—
GS450ET/EX/EZ/ED	80-83	516-1014	—
GS450GAZ/GAD Automatic	82-83	516-1014	—
GS450GAF Automatic	1985	516-1014	—
GS450LT/LX/LZ	80-82	516-1014	—
GS450LD	1983	516-1020	—
GS450LF/LG/LH/LJ	85-88	516-1020	—
GS450ST/SX	80-81	516-1014	—
GS450TX/TZ	81-82	516-1014	—
GS450TXZ/TXD	82-83	516-1014	—
GS500EK-EK2	89-02	516-1029	—
GS500FK4-FK6	04-06	—	—
GT500A/B Titan	76-77	516-1020	—
RE5/RE5MA Rotary	75-76	516-1020	—
SP500X/Z/D	81-83	516-1024	—
T5001/2/3 Titan	68-70	516-1016	—
T500R/J/K/L/M Titan	71-75	516-1016	—
GS550B/C/EC	77-78	516-1020	—
GS550N/EN/ET	79-80	516-1020	—
GS550ED/ESD/EF	83-84	516-1029	—
GS550ESF/ESG	85-86	516-1029	—
GS550LN/LT/LX/LZ	79-82	516-1020	—
GS550LD	1983	516-1030	—
GS550LF	1985	516-1030	—
GS550LG	1986	516-1020	—
GS550MZ	1982	516-1020	—
GS550TX	1981	516-1020	—
GT550J/K/L/M/A/B Indy	72-77	516-1020	—
XN85D Turbo	1983	516-1030	—
GSF600ST/SV/SW Bandit	96-98	516-1038	—
GSF600SX-SK3Bandit	99-03	516-1039	—
GSX600FJ-FK6 Katana	88-06	516-1041	516-2041
GSX-R600WN/WP	92-93	516-1041	—
GSX-R600V/W/X/Y/K1/K2/K3	97-03	516-1048	516-2048
GSX-R600K4/K5	04-05	516-1044	—
RF600RR/RS/RT	94-96	516-1041	—
DL650K4/K5/K6 V-Storm	04-06	516-1044	—
DR650SL/SM/SN/SP	90-93	516-1038	—
DR650SER/SES	94-95	516-1038	—
DR650SET-SEK5 Dual	96-05	516-1047	—
GR650D/XD Tempter	1983	516-1020	—
SV650X/Y/K1/K2/K3/K4/K5	99-05	516-1038	—
SV650SX/SY/SK1/SK2/SK3	99-03	516-1039	—
SV650SK4/SK5	04-05	516-1039	—
GS700EF/ESF	1985	516-1030	—
GS650EX/EZ	81-82	516-1020	—
GS650GX/GZ/GD	81-83	516-1020	—
GS650GLX/GLZ/GLD	81-83	516-1020	—
GS650MD Katana	1983	516-1030	—
LS650FPG/FPH/FPJ Savage	86-88	516-1032	—
LS650FFG/FFH Savage	86-87	516-1032	—
LS650PT-PK4 Savage	96-04	516-1032	—
LS650 Boulevard S40	05-07	516-1032	—
GS700EF/ESF	1985	516-1030	—
VS700GLFG/GLFH Intruder	86-87	516-1030	—
VS700GLPG/GLPH Intruder	86-87	516-1030	—
VS700GLEFG/GLEFH	86-87	516-1030	—
VS700GLEPG/GLEPH	86-87	516-1030	—
GS750B/C/EC/N	77-78	516-1020	—
GS750EN/ET/EX/EZ	79-82	516-1020	—
GS750ED/ESD	1983	516-1030	—
GS750LN	1979	516-1030	—

Suzuki Street

Model	Year	Fork Seal Kit	Dust Seal Kit
GS750LT/LX	80-81	516-1020	—
GS750TZ/TD	82-83	516-1020	—
GS750SD Katana	1983	516-1029	—
GSX750FK-FT Katana	89-96	516-1041	—
GSX750FV-FK6 Katana	97-06	516-1041	516-2041
GSX-R750G/H	86-87	516-1038	—
GSX-R750RG	1986	516-1038	—
GSX-R750J/K/L	88-90	516-1044	—
GSX-R750M/N	91-92	516-1041	—
GSX-R750WP	1993	516-1041	—
GSX-R750WR/WS	94-95	516-1044	—
GSX-R750T/V/W/X/Y	96-00	516-1044	—
GSX-R750K1/K2/K3/K4/K5	01-05	516-1044	—
GSX-R750K6	2006	—	—
GT750J/K/L/M/A/B Lemans	72-77	516-1020	—
VS750GLPJ-GLPM Intruder	88-91	516-1035	—
VL800K1-K4 Volusia	01-04	516-1041	—
VL800 Boulevard C50	05-06	516-1041	—
VL800 Boulevard C50T	2006	516-1041	—
VS800GLN-GLK4 Intruder	92-04	516-1035	—
VS800 Boulevard S50	05-06	516-1035	—
VX800L/M/N/P	90-93	516-1038	—
VZ800V-K3 Marauder	97-03	516-1038	—
GS850GN/GT/GX/GZ/GD	79-83	516-1016	—
GS850GLT-GLD	80-83	516-1016	—
RF900RR/RS/RT/RV	94-97	516-1044	—
RF900RZS	1995	516-1044	—
DL1000K2-K6 V-Storm	02-06	516-1044	—
GS1000C/N	78-79	516-1016	—
GS1000EC/EN/ET	78-80	516-1029	—
GS1000GT/GX	80-81	516-1029	—
GS1000GLT/GLX	80-81	516-1029	—
GS1000LN	1979	516-1029	—
GS1000SN/ST	79-80	516-1029	—
GS1000SZ	1982	516-1029	—
GSX-R1000K1/K2/K3/K4	01-04	516-1046	—
GSX-R1000K5/K6	05-06	—	—
SV1000K3/K4/K5	03-05	516-1070	—
SV1000SK3/SK4/SK5/SK6/SK7	03-07	516-1070	—
TL1000SV/SW/SX/SY/SK1	97-01	516-1046	—
TL1000RW-RK2	98-02	516-1046	—
GS1100ET/EX/EZ	80-82	516-1029	—
GS1100ED/ESD	1983	516-1029	—
GS1100GZ/GD	82-83	516-1029	—
GS1100GLZ/GLD	82-83	516-1029	—
GS1100GKZ/GK2	1982	516-1046	—
GS1100GKD/GKE	83-84	516-1046	—
GS1100LT	1980	516-1029	—
GS1100SD Katana	1983	516-1029	—
GSX1100GM/GN/GP Shaft	91-93	516-1046	—
GSX1100FJ-FP Katana	88-93	516-1041	—
GSX-R1100G/H/J	86-88	516-1037	—
GSX-R1100K/L	89-90	516-1046	—
GSX-R1100M/N	91-92	516-1038	—
GSX-R1100WP/WR	93-94	516-1038	—
GSX-R1100WS/WT/WV/WW	95-98	516-1046	—
GS1150ES3/EF/EG	83-85	516-1029	—
GS1150ESE/ESF/ESG	84-86	516-1029	—
GS1150EF2	1985	516-1029	—
GSF1200SV-SK6 Bandit	97-06	516-1044	—
GSF1200SAV Bandit	1997	516-1044	—
GV1200GLF/GLF2/GLG Madura	85-86	516-1038	—
GSX1300RX-RK6 Hayabusa	99-06	516-1046	—
GV1400GCG/GCH Calvacade	86-87	516-1046	—
GV1400GDG/GDH/GDJ Calvacade	86-88	516-1046	—
GV1400GTG/GTH Calvacade	86-87	516-1046	—
VS1400GLFH Intruder	1987	516-1041	—
VS1400GLPH-GLPK4 Intruder	87-04	516-1041	—
VS1400 Boulevard S83	05-06	516-1041	—
VL1500W-K4 Intruder 1500LC	98-04	516-1041	—
VL1500LC Boulevard C90	05-06	516-1041	—
VL1500LC Boulevard C90T	2006	516-1041	—

Fork Seals & Dust Seal Kits

Suzuki Street

Model	Year	Fork Seal Kit	Dust Seal Kit
GS1150EF2	1985	516-1029	—
GSF1200SV-SK6 Bandit	97-06	516-1044	—
GSF1200SAV Bandit	1997	516-1044	—
GV1200GLF/GLF2/GLG Madura	85-86	516-1038	—
GSX1300RX-RK6 Hayabusa	99-06	516-1046	—
GV1400GCG/GCH Calvacade	86-87	516-1046	—
GV1400GDG/GDH/GDJ Calvacade	86-88	516-1046	—
GV1400GTG/GTH Calvacade	86-87	516-1046	—
VS1400GLFH Intruder	1987	516-1041	—
VS1400GLPH-GLPK4 Intruder	87-04	516-1041	—
VS1400 Boulevard S83	05-06	516-1041	—
VL1500W-K4 Intruder 1500LC	98-04	516-1041	—
VL1500LC Boulevard C90	05-06	516-1041	—
VL1500LC Boulevard C90T	2006	516-1041	—

Suzuki Dual Sport & Offroad

RM60K3	2003	516-1007	—
RM65K3/K4/K5	03-05	516-1015	—
TM75L/M/A	74-76	516-1005	—
TS75M/A/B Colt	75-77	516-1005	—
RM80B/C	77-78	516-1005	—
RM80N-F	79-85	516-1007	—
RM80G/H/J	86-88	516-1014	—
RM80K-K1	89-01	516-1020	—
RM85K2/K3/K4/K5/K6/K7	02-07	516-1030	—
RM85LK2-LK7	02-07	516-1030	—
RV90L/M/A/B Rover	74-77	516-1005	—
TC90	1970	516-1006	—
TC90R/J	71-72	516-1006	—
TS90	1970	516-1006	—
TS90R/J	71-72	516-1006	—
DR100D-L	83-90	516-1007	—
DS100C/N/T/X	78-81	516-1005	—
RM100A/B/C	76-78	516-1006	—
RM100N/T/X	79-81	516-1020	—
RM100K3	2003	516-1024	—
TC100K/L/M/A Blazer	73-77	516-1006	—
TM100L/M	74-75	516-1006	—
TS100K/L/M/A Honcho	73-77	516-1006	—
TS100C/N	78-79	516-1005	—
TS100T/X	80-81	516-1007	—
DR-Z110K3/K4/K5	03-05	516-1007	—
DR125Z/D/E	82-84	516-1011	—
DR125G/H/J	86-88	516-1020	—
DR125SER/SES/SET	94-96	516-1020	—
DR-Z125K3/K4/K5/K6/K7	03-07	516-1007	—
DR-Z125LK3-/LK7	03-07	516-1007	—
DS125N/T/X	79-81	516-1007	—
RM125M/A	75-76	516-1020	—
RM125B/C	77-78	516-1024	—
RM125N/T/X/Z/D	79-83	516-1031	—
RM125E/F/G/H	84-87	516-1047	—
RM125J	1988	516-1046	—
RM125K	1989	516-1051	—
RM125L	1990	516-1038	516-2038
RM125M/N/P/R/S	91-95	516-1048	516-2048
RM125T/V/W/X/Y	96-00	516-1052	516-2052
RM125K1/K2/K3/K4	01-04	516-1053	516-2053
RM125K5/K6/K7	05-07	—	—
SP125Z/D	82-83	516-1010	—
SP125G/H/J	86-88	516-1020	—
TC125J/K/L/M/A/B Prospector	72-77	516-1006	—
TM125K/L/M	73-75	516-1006	—
TS125R/J/K/L/M/B Duster	71-77	516-1006	—
TS125C/N	78-79	516-1007	—

Suzuki Dual Sport & Offroad

Model	Year	Fork Seal Kit	Dust Seal Kit
TS125T/X	80-81	516-1010	—
PE175C/N/T/X	78-81	516-1024	—
PE175Z/D/E	82-84	516-1031	—
RS175T/X/Z	80-82	516-1024	—
DS185C	1978	516-1006	—
DS185N/T	79-80	516-1011	—
TC185L/M/A/B Ranger	74-77	516-1006	—
TS185R/J/K/L/M/A Sierra	71-76	516-1006	—
TS185B/C	77-78	516-1006	—
TS185N/T/X	79-81	516-1011	—
DR200G/H/J	86-88	516-1020	—
DR200SET-SEK7 Dual Sport	96-07	516-1020	—
SP200G/H/J	86-88	516-1020	—
DR250Z/D	82-83	516-1024	—
DR250F	1985	516-1024	—
DR250L/M/N/P Offroad	90-93	516-1044	—
DR250SL-SES Dual Sport	90-95	516-1044	—
DR-Z250K1/K2/K3/K4/K5/K6	01-06	516-1044	—
DS250T	1980	516-1024	—
PE250B/C/N/T/X	77-81	516-1024	—
RL250L/M Trials	74-75	516-1020	—
RM250A/B/C/C2	76-78	516-1024	—
RM250N/T/X/Z	79-82	516-1031	—
RM250D/E/F/G/H	83-87	516-1047	—
RM250J	1988	516-1046	—
RM250K/L	89-90	516-1038	516-2038
RM250M/N/P/R/S	91-95	516-1048	516-2048
RM250T/V/W/X/Y	96-00	516-1052	516-2052
RM250K1/K2/K3	01-03	516-1050	516-2050
RM250K4	2004	516-1053	—
RM-Z250K4	2004	516-1071	516-2071
RMX250K/L	89-90	516-1038	516-2038
RMX250M-W	91-98	516-1048	516-2048
RS250T/X	80-81	516-1024	—
SP250Z/D	82-83	516-1020	—
SP250F	1985	516-1020	—
TM250J/K	72-73	516-1016	—
TM250L/M	74-75	516-1020	—
TS250I Savage	1969	516-1019	—
TS250II Savage	1970	516-1016	—
TS250R/J/K/L/M/A	71-76	516-1016	—
TS250B/C/N	77-79	516-1020	—
TS250T/X	80-81	516-1024	—
DR350L-X Offroad	90-99	516-1044	—
DR350SL-SEX Dual Sport	90-99	516-1044	—
DR370C/N	78-79	516-1024	—
RM370A/B	76-77	516-1024	—
SP370C/N	78-79	516-1024	—
DR400T	1980	516-1024	—
DR-Z400EY-EK7	00-07	516-1052	516-2052
DR-Z400SMK5-K7 Supermotard	05-07	516-1053	—
DR-Z400SY-SK7 Dual Sport	00-07	516-1052	516-2052
DR-Z400Y/K1/K2/K3/K4	00-04	516-1052	516-2052
PE400T/X	80-81	516-1024	—
RM400C	1978	516-1024	—
RM400N/T	79-80	516-1031	—
SP400T Dual Sport	1980	516-1024	—
TM400R/J Cyclone	71-72	516-1016	—
TM400K/L/M	73-75	516-1020	—
TS400J-B Apache	71-77	516-1016	—
RM465X/Z	81-82	516-1047	—
DR500X/Z/D	81-83	516-1024	—
RM500D/E	83-84	516-1047	—
SP500X/Z/D	81-83	516-1024	—
DR650SL-SES Dual Sport	90-95	516-1038	—
DR650SET-SEK7 Dual Sport	96-07	516-1047	—

Triumph

Model	Year	Fork Seal Kit	Dust Seal Kit
Models with 43mm Forks		516-1047	———
Models with 45mm Forks		516-1048	———

Yamaha Street

Model	Year	Fork Seal Kit	Dust Seal Kit
DT50U/W/A	88-90	516-1006	———
YSR50T/U/W/A/B/D	87-92	516-1005	———
HS1/HS1B-90	70-71	516-1005	———
DT100A/B/C	74-76	516-1006	———
DT100D-K	77-83	516-1005	———
LS2-100	1972	516-1005	———
RS100B/C	75-76	516-1005	———
AT1E125 Enduro	1969	516-1006	———
AT1B/AT1C/AT2/AT3-125 Enduro	70-73	516-1006	———
DT125A/B/C	74-76	516-1006	———
DT125E	1978	516-1010	———
DT125F/G/H	79-81	516-1011	———
TZ125G	1980	516-1006	———
XT125J/K/KC Dual Sport	83-83	516-1011	———
CT1/B/CT1C-175 Enduro	69-71	516-1006	———
CT2/CT3-175 Enduro	72-73	516-1006	———
DT175A/B/C	74-76	516-1006	———
DT175E	1978	516-1010	———
DT175F/G/H	79-81	516-1011	———
SR185H/J Exciter	81-82	516-1007	———
CS3C/CS3B-200	70-71	516-1006	———
CS5-200	1972	516-1006	———
RD200A/B/C	74-76	516-1006	———
TW200T/TC-V/VC Trailway	87-06	516-1013	———
XT200J/K/KC Dual Sport	82-83	516-1019	———
XT225E/EC-V/VC Serrow	93-06	516-1026	———
DS6C/DS6B-250	69-70	516-1011	———
DS7-250	1972	516-1016	———
DT1/DT1B/DT1C/DT1E-250 Enduro	68-71	516-1016	———
DT1S-250 Enduro	1969	516-1016	———
DT2/DT3-250 Enduro	72-73	516-1016	———
DT250A/B/C/D/E	74-78	516-1016	———
DT250F	1979	516-1025	———
RD250/A/B	73-75	516-1016	———
SR250G/H/J Exciter	80-82	516-1011	———
SR250TH Exciter II	1981	516-1011	———
SRX250T/TC	1987	516-1013	———
TD3-250 (Roadrace)	1972	516-1016	———
TZ250 (Roadrace)	1973	516-1016	———
TZ250C/D/E (Roadrace)	76-78	516-1019	———
TZ250F (Roadrace)	1979	516-1017	———
XT250G/H/J/K/KC Dual Sport	80-83	516-1019	———
XT250L/LC Dual Sport	1984	516-1025	———
XV250U/UC/W/WC/A/AC Route 66	88-90	516-1013	———
XV250G/GC/H/HC/K/KC Route 66	95-98	516-1013	———
XV250L/LC Virago 250	1999	516-1013	———
XV250P/PC-V/VC Virago 250	02-06	516-1013	———
R3-350	1969	516-1016	———
R5/R5B/R5C-350	70-72	516-1016	———
RD350/A/B	73-75	516-1016	———
RZ350L/N/NC/NCII	84-85	516-1020	———
TR3 350 (Roadrace)	1972	516-1016	———
TZ350 (Roadrace)	1973	516-1016	———
TZ350C/D/E	76-78	516-1019	———
XT350N/NC-M/MC Dual Sport	85-00	516-1025	———
DT360A/B Enduro	74-75	516-1016	———
RT1/RT1B-360 Enduro	70-71	516-1016	———
RT2/RT3-360 Enduro	72-73	516-1016	———
XS360C/D/2D	76-77	516-1014	———
DT400B/C/D/E	75-78	516-1016	———
FZR400U/SUCW/SWC/A/SAC	88-90	516-1032	———

Yamaha Street

Model	Year	Fork Seal Kit	Dust Seal Kit
RD400C/D/E	76-78	516-1016	———
RD400F	1979	516-1019	———
XS400D/E/2E/F/2F	77-79	516-1014	———
XS400G/H Special	80-81	516-1014	———
XS400J/K Maxim	82-83	516-1020	———
XS400RJ/RK Seca	82-83	516-1020	———
XS400SG/SH/SJ Special	80-82	516-1014	———
SR500E/F/G/H	78-81	516-1019	———
XT500C/D/E/F/G/H Dual Sport	76-81	516-1025	———
TX500/A	73-74	516-1016	———
XS500B	1975	516-1016	———
XS500C/D/E	76-78	516-1020	———
XV500K Virago	1983	516-1024	———
XV535T/TC/U Virago	87-88	516-1026	———
XV535A/AC Virago	1990	516-1026	———
XV535E/EC-L/LC Virago	93-99	516-1026	———
XV535SF/SFC-SJ/SJC Virago	94-97	516-1026	———
XJ550H/J/K Maxim	81-83	516-1024	———
XJ550RH/RJ/RK Seca	81-83	516-1017	———
XT550J/K Dual Sport	82-83	516-1032	———
XZ550RJ/RK Vision	82-83	516-1017	———
FJ600L/LC/N/NC	84-85	516-1024	———
FZ600S/SC/T/TC/U/UC	86-88	516-1024	———
FZR600W/WC/AC	89-90	516-1032	———
FZR600RA/RAC-RL/RLC	90-99	516-1032	———
SRX600S/SC	1986	516-1024	———
XJ600SD/SDC-SJ/SJC Seca II	92-97	516-1032	———
XT600L/LC-EG/EGC Dual Sport	84-95	516-1040	———
YX600S/SC-A/AC Radian	86-90	516-1024	———
YZF600RG/RGC-RV/RVC	95-06	516-1038	———
YZF-R6L/LC-S/SC (43mm forks)	99-04	516-1046	———
YZF-R6SCS (43mm forks)	2004	516-1046	———
YZF-R6T/TC	2005	———	———
YZF-R6V/VC	2006	———	———
YZF-R6SN/SNC Champions L.E.	2001	516-1046	———
YZF-R6SPV/SPVC 50th Anniversary	2006	———	———
YZF-R6SR/SRC/SS (43mm forks)	03-04	516-1046	———
YZF-R6SV/SVC (43mm forks)	2006	516-1046	———
XJ650G/H/J/K Maxim	80-83	516-1024	———
XJ650LH Midnight Maxim	1981	516-1024	———
XJ650LJ Seca Turbo	1982	516-1024	———
XJ650LK Seca Turbo	1983	516-1029	———
XJ650RJ Seca	1982	516-1024	———
XS1/XS1B/XS2-650	70-72	516-1016	———
TX650/A	73-74	516-1016	———
XS650B/C	75-76	516-1016	———
XS650D/E/F/2F	77-79	516-1019	———
XS650G/H Special II	80-81	516-1019	———
XS650SE/SF/SG/SH Special	78-81	516-1019	———
XS650SJ/SK Heritage Special	82-83	516-1019	———
XVS650AK/AKC-AV/AVC V-Star Classic	98-06	516-1038	———
XVS650ATR/ATRC V-Star Silverado	2003	516-1038	———
XVS650ATS/ATSC V-Star Silverado	2004	516-1038	———
XVS650ATT/ATTC V-Star Silverado	2005	516-1038	———
XVS650ATV/ATVC V-Star Silverado	2006	516-1038	———
XVS650K/KC-S/SC V-Star Custom	98-04	516-1038	———
XVS650T/TC/V/VC	05-06	516-1038	———
V-Star Midnight Custom			
FZ700T/TC	1987	516-1034	———
XJ700N/NC/S/SC Maxim	85-86	516-1032	———
XJ700XN/XNC/XS/XSC Maxim X	85-86	516-1032	———
XV700L/LC/N/NC Virago	84-85	516-1032	———
XV700CS/CSC/CT/CTC Virago	86-87	516-1032	———
XV700SS/SSC Virago	1986	516-1032	———
FZ750N/S/SC	85-86	516-1034	———
FZ750U/UC	1988	516-1034	———

Fork Seals & Dust Seal Kits

Yamaha Street

Model	Year	Fork Seal Kit	Dust Seal Kit
FZR750RT/RU	87-88	516-1038	———
TX750/A	73-74	516-1019	———
TZ750A Roadracer	1974	516-1019	———
TZ750D Roadracer	1977	516-1019	———
XS750D	1977	516-1020	———
XS7502D/E/SE/F/SF	77-79	516-1026	———
XJ750J/K Maxim	82-83	516-1024	———
XJ750MK Midnight Maxim	82-83	516-1024	———
XJ750RH/RJ/RK Seca	81-83	516-1026	———
XV750H/J/K Virago	81-83	516-1024	———
XV750MK Midnight Virago	1983	516-1024	———
XV750U/UC-G/GC Virago	88-95	516-1032	———
XV750H1/HC1/J1/JC1	96-97	516-1032	———
YZF750RF/RFC	1994	516-1038	———
YZF750RH/RHC-RK/RKC	96-98	516-1038	———
XS850G/H	80-81	516-1026	———
XS850LG/LH Midnight Special	80-81	516-1024	———
XS850SG/SH Special	80-81	516-1024	———
XJ900RK Seca	1983	516-1029	———
XV920J Virago	1982	516-1026	———
XV920K Virago	1983	516-1024	———
XV920MK Midnight Virago	1983	516-1024	———
XV920RH/RJ	81-82	516-1029	———
FZR1000T/TC/U/UC	87-88	516-1038	———
FZR1000W/WC/A/AC	89-90	516-1046	———
FZR1000B/BC/D/DC/E/EC	91-93	516-1038	———
FZR1000F/FC/G/GC	94-95	516-1046	———
FZS1000N/NC-V/VC FZ1	01-06	516-1044	———
FZS1000SPR/SPRC FZ1	2003	516-1044	———
XV1000L/LC/N/NC Virago	84-85	516-1032	———
YZF1000RK/RKC	1998	516-1038	———
YZF-R1L/LC/M/MC/N/NC	99-01	516-1038	———
YZF-R1P/PC-V/VC	02-06	516-1046	———
FJ1100L/LC/N/NC	84-85	516-1038	———
XJ1100J Maxim	1982	516-1030	———
XS1100E/F/G/H	78-81	516-1029	———
XS1100LG/LH Midnight Special	80-81	516-1027	———
XS1100SF/SG/SH Special	79-81	516-1027	———
XV1100S/SC-J/JC Virago	86-97	516-1032	———
XV1100SH/SHC/SJ/SJC Virago	96-97	516-1032	———
XVS1100AM/AMC-AS/ASC V-Star 1100 Classic	00-04	516-1038	———
XVS1100AWR/AWRC V-Star 1100 Classic	2003	516-1038	———
XVS1100AWT/AWTC V-Star 1100 Classic	2005	516-1038	———
XVS1100AWV/AWVC V-Star 1100 Classic	2006	516-1038	———
XVS1100L/LC-S/SC V-Star 1100 Classic	99-04	516-1038	———
XVS1100 V-Star 1100 Custom w/flames	2005	516-1038	———
XVS1100AT V-Star 1100 Silverado	03-06	516-1038	———
FJ1200S/SC/T/TC	86-87	516-1038	———
FJ1200W/WC-D/DC	89-92	516-1038	———
FJ1200AD/ADC/AE/AEC (ABS)	92-93	516-1038	———
VMX12N/NC/S/SC V-Max	85-86	516-1036	———
VMX12U/UC-D/DC	88-92	516-1036	———
VMX12E/EC-V/VC V-Max	93-06	516-1046	———
XVZ12TK/L/KC2 Venture	83-84	516-1036	———
XVZ12DL/DKC2/DN Venture Royale	84-85	516-1036	———
XVZ12TDK Venture Royale	1983	516-1036	———
XVZ13DS/DSC-DE/DEC Royale	86-93	516-1036	———
XVZ13T/TC/U/UC Venture	87-88	516-1036	———
XVZ13AH/AHC-AK/AKC Royal Star	96-98	516-1044	———
XVZ1300AL/ALC-AN/ANC Royal Star Boulevard	99-01	516-1044	———

Yamaha Street

Model	Year	Fork Seal Kit	Dust Seal Kit
XVZ1300ATH/ATHC-ATM/ATMC Royal Star Tour Classic	96-00	516-1044	———
XVZ13LT/LTJC-LTN/LTNC Royal Star Tour Deluxe	97-01	516-1044	———
XV1600AL/ALC-AR/ARC Road Star	99-03	516-1044	———
XV1600ALER/ALERC Road Star Limited Edition	2003	516-1044	———
XV1600ASN/ASNC/ASP/ASPC Road Star Midnight	01-02	516-1044	———
XV1600ASR/ASRC Road Star Midnight	2003	516-1044	———
XV1600ATLRoad Star Silverado	1999	516-1044	———
XV1600ATN/ATNC/ATP/ATPC Road Star Silverado	01-02	516-1044	———
XV1600ATR/ATRC Road Star Silverado	2003	516-1044	———
XV1600ATLER/ATLERC Road Star Silverado Limited Edition	2003	516-1044	———
XV1700AMS/AMSC/AMT/AMTC Road Star Midnight	04-05	516-1044	———
XV1700AS/ASC/AT/ATC Road Star	04-05	516-1044	———
XV1700AV/AVC Road Star	2006	516-1044	———
XV1700ATS/ATSC Road Star Silverado	2004	516-1044	———
XV1700ATT/ATTC Road Star Silverado	2005	516-1044	———
XV1700ATV/ATVC Road Star Silverado	2006	516-1044	———
XV1700ATMS/ATMSC/ATMT/ATMTC Road Star Midnight Silverado	04-05	516-1044	———
XV1700ATMV/ATMVC Road Star Midnight Silverado	2006	516-1044	———
XV1700AWT/AWTC Road Star	2005	516-1044	———
XV1700AWV/AWVC Road Star	2006	516-1044	———
XV1700PCR/PCRC Road Star Warrior	2003	516-1038	———
XV1700PCRB/PCRBC Road Star Warrior	2003	516-1038	———
XV1700PCS/PCSC Road Star Warrior	2004	516-1038	———
XV1700PCT/PCTC Road Star Midnight	2005	516-1038	———
XV1700PCV/PCVC Road Star Warrior	2006	516-1038	———
XV1700PCT-F/PCTC-F/PCV-F/PCVC-F Road Star Warrior w/flames	05-06	516-1038	———
XV1700PCMV/PCMVC Road Star Midnight Warrior	2006	516-1038	———

Yamaha ATV

YT175J/K Tri-Moto	82-83	516-1007	———
YTM200K/L/N/EK/EL/ERN	83-85	516-1007	———
YTM225DXK-DXN/DRN	83-85	516-1007	———
YTZ250N Tri-Z	1985	516-1020	———
YTZ250S Tri-Z	1986	516-1035	———

Yamaha Dual Sport & Offroad

DT50U/W/A	88-90	516-1006	———
YZ80A/B/C/D/E	74-78	516-1005	———
YZ80F/G/H/J	79-82	516-1007	———
YZ80K-D	83-92	516-1013	———
YZ80E1-N1	93-01	516-1024	———
YZ85P/R/S/T/V/W1/X/Y/Z/A/B/D	02-13	516-1024	———
HT1/HT1B/HT1BM90	70-71	516-1005	———
DT100A/B/C	74-76	516-1006	———
DT100D-K	77-83	516-1005	———
LT2/LT3/LT2M/LT2MX-100	72-73	516-1005	———
MX100A/B	74-75	516-1006	———
MX100F/G/H/J/K	79-83	516-1005	———
RT100A-M	90-00	516-1005	———
YZ100C/D	76-77	516-1016	———
YZ100E/F	78-79	516-1011	———
YZ100G/H	80-81	516-1019	———
YZ100J/K	82-83	516-1025	———
AT1E125 Enduro	1969	516-1006	———

Yamaha Dual Sport & Offroad

Model	Year	Fork Seal Kit	Dust Seal Kit
AT1B/AT1C/AT2/AT3-125 Enduro	70-73	516-1006	—
AT1M/AT1MB-125	69-70	516-1006	—
AT1MX/AT2M/AT2MX-125	71-73	516-1006	—
DT125A/B/C	74-76	516-1006	—
DT125E	1978	516-1010	—
DT125F/G/H	79-81	516-1011	—
IT125G	1980	516-1011	—
IT125H	1981	516-1019	—
MX125A/B	74-75	516-1006	—
MX125C	1976	516-1016	—
TTR125M/MC/N/P/R/S	00-04	516-1006	—
TTR125ER/ES/ET/EV	03-06	516-1006	—
TTR125LER/LES/LET/LEV	03-06	516-1006	—
TTR125LWM	2000	516-1006	—
TTR125LN/LPC/LR/LS/LT/LV	01-06	516-1006	—
XT125J/K/KC Dual Sport	83-83	516-1011	—
YZ125A/B	74-75	516-1006	—
YZ125C	1976	516-1016	—
YZ125D/E/F/G	77-80	516-1025	—
YZ125H/J/K	81-83	516-1032	—
YZ125L/N	84-85	516-1044	—
YZ125S/T	86-87	516-1047	—
YZ125U	1988	516-1046	—
YZ125W/A	89-90	516-1038	516-2038
YZ125B/D1/E1/F1/G1	91-95	516-1046	516-2046
YZ125H1-R	96-03	516-1050	516-2050
YZ125S1	2004	516-1071	516-2071
YZ125T1/V	05-06	516-1071	—
CT1/B/CT1C-175 Enduro	69-71	516-1006	—
CT2/CT3-175 Enduro	72-73	516-1006	—
DT175A/B/C	74-76	516-1006	—
DT175E	1978	516-1010	—
DT175F/G/H	79-81	516-1011	—
IT175D/E/F/G/H	77-81	516-1025	—
IT175J/K	82-83	516-1032	—
MX175A/B	74-75	516-1006	—
MX175F/G/H	79-81	516-1011	—
TY175B/C Trials	75-76	516-1006	—
BW200N/S/ES/ET/EU	85-88	516-1013	—
IT200L/N/S	84-86	516-1047	—
TW200T/TC-V/VC Trailway	87-06	516-1013	—
WR200RD	1992	516-1038	516-2038
XT200J/K/KC Dual Sport	82-83	516-1019	—
TT225S/T	86-87	516-1026	—
TT225L/LC/RM/RMC	00-01	516-1026	—
TT-R225N/NC/P/PC/R/RC	01-03	516-1026	—
TT-R225S/SC	2004	516-1026	—
XT225E/EC-V/VC Dual Sport	93-06	516-1026	—
TT-R230T/TC/V	05-06	516-1026	—
DT1/DT1B/DT1C/DT1E-250 Enduro	68-71	516-1016	—
DT1S-250 Enduro	1969	516-1016	—
DT2/DT3-250 Enduro	72-73	516-1016	—
DT250A/B/C/D/E	74-78	516-1016	—
DT250F	1979	516-1025	—
DT1CMX/DT1EMX-250	70-71	516-1016	—
DT2MX-250	1972	516-1016	—
IT250D/E/F/G	77-80	516-1025	—
IT250H/J	81-82	516-1032	—
IT250K	1983	516-1047	—
MX250/A/B	73-75	516-1016	—
TT250G/H/J	80-82	516-1025	—
TT250RL/RLC/RM/RMC	99-00	516-1046	516-2046
TT-R250N/NC-V/VC	01-06	516-1046	516-2046
TY250A Trials	1974	516-1016	—
TY250C/D Trials	76-77	516-1016	—

Yamaha Dual Sport & Offroad

Model	Year	Fork Seal Kit	Dust Seal Kit
WR250ZB-ZJ	91-97	516-1046	516-2046
WR250FN/FP/FR/FS	01-04	516-1050	516-2050
WR250FT/FV	05-06	516-1071	—
XT250G/H/J/K/KC Dual Sport	80-83	516-1019	—
XT250L/LC Dual Sport	1984	516-1025	—
YZ250A/B	74-75	516-1016	—
YZ250D/E/F/G	77-80	516-1032	—
YZ250H/J/K/L/N/S/T	81-87	516-1047	—
YZ250U	1988	516-1046	516-2046
YZ250W/A	89-90	516-1038	516-2038
YZ250WRW/WRA	89-90	516-1038	516-2038
YZ250B1/D1/E1/F1/G1	91-95	516-1046	516-2046
YZ250H1/J1/K1/L1/M1	96-00	516-1050	516-2050
YZ250N1/P/R	01-03	516-1050	516-2050
YZ250S1	2004	516-1071	516-2071
YZ250T1/V	05-06	516-1071	—
YZ250FN/FP/FR	01-03	516-1050	516-2050
YZ250FS	2004	516-1071	516-2071
YZ250FT/FV	05-06	516-1071	—
BW350U	1988	516-1013	—
TT350S/T	86-87	516-1041	—
TY350N/S Trials	85-86	516-1025	—
XT350N/NC-M/MC Dual Sport	85-00	516-1025	—
RT1/RT1B-360 Enduro	70-71	516-1016	—
RT2/RT3-360 Enduro	72-73	516-1016	—
RT1M/RT1BMX/RT2MX-360	70-72	516-1016	—
DT360A/B Enduro	74-75	516-1016	—
MX360/A	73-74	516-1016	—
YZ360A/B	74-75	516-1016	—
DT400B/C/D/E	75-78	516-1016	—
IT400C/D/E/F	76-79	516-1025	—
MX400B	1975	516-1016	—
WR400FK/FL/FM	98-00	516-1050	516-2050
YZ400D/E/F	77-79	516-1032	—
YZ400FK/FL	98-99	516-1050	516-2050
IT425G	1980	516-1025	—
WR426FN/FP	01-02	516-1050	516-2050
YZ426FM/FN/FP	00-02	516-1050	516-2050
WR450FR/FS	03-04	516-1050	516-2050
WR450FT/FV	05-06	516-1071	516-2071
YZ450FR	2003	516-1050	516-2050
YZ450FS	2004	516-1071	516-2071
YZ450FT/FV	05-06	516-1071	—
IT465H/J	81-82	516-1032	—
YZ465G	1980	516-1032	—
YZ465H	1981	516-1047	—
IT490K/L	83-84	516-1047	—
YZ490J/K/L/N/S/T	82-87	516-1047	—
YZ490U/W/A	88-90	516-1046	516-2046
SC500/A Scrambler	73-74	516-1016	—
TT500C/D/E/F/G/H	76-81	516-1025	—
XT500C/D/E/F/G/H Dual Sport	76-81	516-1025	—
WR500ZD/ZE	92-93	516-1046	516-2046
XT550J/K Dual Sport	82-83	516-1032	—
TT600K/L/N/S	83-86	516-1047	—
XT600L/LC-EG/EGC Dual Sport	84-95	516-1040	—

Suspension Accessories

PC Racing Fork Skins

Forkskins protect the fork tubes from mud and dirt contamination, keeping fork seals clean in all conditions. Increases fork seal life. Included at no charge with each Fork Skins is a set of grip DONUTZ which help prevent nasty thumb blisters.

Description	Order No.
Fork Skins Small Diameter "Short Version"	**945-100**
Fits fork tubes with a diameter of 32mm - 43mm.	
Application: 50cc to 85cc motocross and trail bikes.	
Fork Skins Large Diameter "Short Version"	**945-101**
Fits fork tubes with a diameter of 44mm - 50mm.	
Application: 125cc and larger motocross bikes.	
Fork Skins Small Diameter "Long Version"	**945-103**
Fits fork tubes with a diameter of 32mm - 43mm.	
Application: 50cc to 85cc motocross and trail bikes.	
Fork Skins Large Diameter "Long Version"	**945-104**
Fits fork tubes with a diameter of 44mm - 50mm.	
Application: 125cc and larger motocross bikes	

PC Racing Fork Support

- Sized to fit most 80cc and up big bore applications
- Stabilizes bike during transportation
- Keeps bike strapped down tight without damaging fork seals
- Bikes won't bounce off tie-down's, preventing damage to motorcycle or vehicle
- Fits all bikes with 11 inches or more of travel
- Polycarbonate injected molded plastic

Order No. 945-095

Motion Pro Fork Seal Drivers

Manufactured from CAD-II plated carbon steel and features a split design. Each driver weighs approximately 25oz.
Sold individually.(Split as shown in photo) ***Made in U.S.A.***

Size	Order No.
39mm	950-392
41mm	950-393
43mm	950-394
45mm	950-395
46/47mm combo	950-396
48mm **New**	950-769
49/50mm combo	950-397

Redline Suspension Fluids

Red Line Suspension Fluids provide very good shear stability which means that they should not degrade with use. They change very little with temperature and will provide lower operating temperatures for the same viscosity when compared to conventional suspension fluids. They are also very low forming and provide good seal lubricity and anti-wear properties. They can be blended together in any proportion to achieve an intermediate viscosity. For use in cartridge forks and motorcycle shocks. Sold in 16 oz. bottle.

Description	SAE Weight	Order No.
Like Water Suspension Fluid no	No SAE rating	900-860
Extra Light Suspension Fluid	2.5wt	900-861
Lightweight Suspension Fluid	5wt	900-862
Medium Suspension Fluid	10wt	900-863

PJ1 Fork Tuner Oil

For updating and adjusting fork systems.

- An effective and inexpensive method to "tune" conventional fork compression
- For different rider weights and conditions

Sold in 1/2 lt. and 1 lt. bottle.

Description	Order No.
2.5W, 1/2 lt. bottle	899-040
5W, 1 lt. bottle	899-043
7.5W, 1 lt. bottle	899-045
10W, 1 lt. bottle	899-047

Cartridge Pro Fork Fluid

Meets or exceeds OEM specifications for Showa and Kayaba cartridge / twin chamber forks.
Sold in 1 lt. bottle.

Order No. 899-060

Fork Dust Boot (Dust Shield) NEW

Replaces Kawasaki OEM 44010-032.
Sold in pair. Available for the following Kawasaki models.

Order No. 516-010

Kawasaki Street

Model	Year
H1D/H1E/H1F-500	73-75
KH500A8	1976
KZ650B1/B2/B2A/B3	77-79
KZ650C1/C2/C3 Custom	77-79
KZ650D1/D1A/D2 SR	78-79
KZ650E1 LTD	1980
KZ650F1	1980
KZ750B1/B2/B3/B4 2-cyl.	77-79
KZ750G1 LTD 2-cylinder	1980
KZ900A4/A5	76-77
KZ900B1 LTD	1976
KZ1000A2/A2A	1978
KZ1000A3/A3A/A4 MKII	79-80
KZ1000B1/B2/B3/B4 LTD	77-80
KZ1000D1 Z1R	1978
KZ1000D3 Z1R	1980
KZ1000G1 LTD Classic	1980

Kawasaki Offroad

KXT250A1/A2 Tecate 3	84-85
KX250/A/A3	74-76
KX250A4/A5	78-79
KX400/A2	75-76

Seal Mate

Easy way to keep your fork seals clean and debris free.
Extract dirt and debris trapped between fork seal and tube.
Works on most conventional and up-side-down forks.

Order No. 950-399

Steering Stem Bearing Kits

Steering Stem Bearing Kits

Quality bearing kits sourced from **Japan** and made to OEM specifications. Kits with an * **(asterisk)** are an upgrade from stock ball bearing/race to tapered bearing for improved handling and longer life. All other kits are replacements for original tapered bearings.
Made in Japan.

BMW

Upper Bearing Dimension	Lower Bearing Dimension	Mfg.#	Order No.
34 x 51 x 12mm	34 x 51 x 12mm	SSW055*	713-810
28 x 52 x 16.5mm	28 x 52 x 16.5mm	SSW901	713-820

Honda

22.5 x 41 x 12.5mm	24 x 41 x 12.5mm	SSH200*	713-020
26 x 48.5 x 15.2mm	30 x 50 x 14.4mm	SSH750*	713-030
26 x 47 x 15mm	26 x 47 x 15mm	SSH902	713-042
26 x 47 x 15mm	26 x 47 x 15mm	SSH902R	713-043
26 x 47 x 15mm	30 x 55 x 17mm	SSH903	713-044
26 x 47 x 15mm	30 x 55 x 17mm	SSH903R	713-045
26 x 47 x 15mm	30 x 51 x 15mm	SSH904	713-046
30 x 51 x 15mm	30 x 51 x 15mm	SSH905	713-047
30 x 51 x 15mm	30 x 55 x 17mm	SSH907	713-049

Kawasaki

30 x 48 x 14mm	30 x 48 x 12mm	SSK100*	713-610
30 x 48 x 14mm	30 x 52 x 17mm	SSK400*	713-630
25 x 47 x 15mm	30 x 55 x 17mm	SSH901	713-040
25 x 47 x 15mm	28 x 52 x 16.5mm	SSK902	713-650
35 x 55 x 14mm	35 x 55 x 14mm	SSK907	713-653

Suzuki

25 x 48 x 13mm	30 x 48 x 13mm	SSY125*	713-230
25 x 47 x 15mm	30 x 55 x 17mm	SSH901	713-040
25 x 48 x 16mm	27 x 48 x 14mm	SSS250	713-410
25 x 48 x 13mm	30 x 55 x 18mm	SSS902	713-450
30 x 55 x 17mm	30 x 55 x 17mm	SSS903	713-451

Yamaha

25 x 48 x 16mm	27 x 48 x 14mm	SSS250*	713-410
25 x 43 x 11mm	30 x 48 x 12mm	SSY080*	713-210
25 x 48 x 13mm	30 x 48 x 13mm	SSY125*	713-230
25 x 48 x 15.2mm	30 x 48 x 15mm	SSY500*	713-240
25 x 47 x 15mm	30 x 55 x 17mm	SSH901	713-040
25 x 47 x 15mm	30 x 55 x 17mm	SSH901R	713-041

Note: SSH901R contains spacer washer and uses same bearings as SSH901. (SSH901R is not shown in application chart)

BMW

Model	Year	Mfg. Ref #	Order No.
All BMW models	59-69	SSW055*	713-810
All BMW models except F650	70-	SSW901*	713-820

Honda Street

MB5-50	1982	SSH200	713-020
NSF50F	1990	SSH200	713-020
CB100/K1/K2 Super Sport 100	70-72	SSH200	713-020
CL100/K1/K2 Scrambler 100	70-72	SSH200	713-020
CL100S/S2/S3 Scrambler 100S	71-73	SSH200	713-020
CB125S/S1/S2	73-75	SSH200	713-020
CB125S	1976	SSH200	713-020
CB125S	78-82	SSH200	713-020
CB125S	84-85	SSH200	713-020
CB125TT	1990	SSH200	713-020
MT125R/RII Roadracer	77-78	SSH200	713-020
CM185T Twinstar	78-79	SSH200	713-020
CM200T Twinstar	80-82	SSH200	713-020
CB250 Nighthawk	91-08	SSH200	713-020
CM250C Custom	82-83	SSH200	713-020
CMX250C/CD Rebel 250	85-87	SSH200	713-020
CMX250C	96-06	SSH200	713-020
CMX250C2	99-00	SSH200	713-020
VTR250 Interceptor	1988	SSH750	713-030
VTR250 Interceptor	89-90	SSH903	713-044
CB350F/F1 Super Sport	73-74	SSH750	713-030
CB350G	1973	SSH750	713-030
CB350/K1-K4 Super Sport	68-72	SSH750	713-030
CL350/K1-K5 Scrambler	68-73	SSH750	713-030
SL350/K1/K2 Motosport	69-73	SSH750	713-030
CB360/G	1974	SSH750	713-030
CB360T	75-76	SSH750	713-030
CJ360T	76-77	SSH750	713-030
CL360/K1 Scrambler	74-75	SSH750	713-030
CB400A Automatic	1978	SSH750	713-030
CB400F Super Sport	75-77	SSH750	713-030
CB400TI/TII Hawk	78-79	SSH750	713-030
CB400T Hawk	80-81	SSH750	713-030
CM400A Automatic	79-81	SSH750	713-030
CM400C Custom	1981	SSH750	713-030
CM400E	80-81	SSH750	713-030
CM400T	79-81	SSH750	713-030
CB450 Super Sport 450	65-68	SSH750	713-030
CB450K1-K7 Super Sport 450	68-74	SSH750	713-030
CB450SC Nighthawk	82-83	SSH750	713-030
CB450SC Nighthawk	85-86	SSH750	713-030
CB450T Hawk	1982	SSH750	713-030
CL450K1-K6 Scrambler	68-74	SSH750	713-030
CM450A Automatic	82-83	SSH750	713-030
CM450C Custom	1982	SSH750	713-030
CM450E	82-83	SSH750	713-030
CMX450C Rebel	86-87	SSH903	713-044
CB500/K1/K2	71-73	SSH750	713-030
CB500T	75-76	SSH750	713-030
CX500	78-79	SSH750	713-030
CX500C Custom	79-82	SSH750	713-030
CX500D	79-81	SSH750	713-030
CX500TC Turbo	1982	SSH903	713-044
FT500 Ascot	82-83	SSH750	713-030
GB500	89-90	SSH750	713-030
GL500 Silverwing	81-82	SSH750	713-030
GL500I Silverwing Interstate	81-82	SSH750	713-030
VF500C Magna	84-85	SSH903R	713-045
VF500F Interceptor	84-86	SSH903R	713-045
VT500C Shadow	83-84	SSH750	713-030
VT500C Shadow	85-86	SSH903R	713-045

Steering Stem Bearing Kits

Honda Street

Model	Year	Mfg. Ref #	Order No.
VT500FT Ascot	83-84	SSH750	713-030
CB550F Super Sport	75-77	SSH750	713-030
CB550/K1	74-75	SSH750	713-030
CB550K	76-78	SSH750	713-030
CB550SC Nighthawk	1983	SSH750	713-030
CBR600F Hurricane	87-90	SSH903R	713-045
CBR600F2 Hurricane	91-94	SSH903R	713-045
CBR600F3 Hurricane	95-98	SSH903R	713-045
CBR600SE Hurricane	1998	SSH903R	713-045
CBR600RR	03-06	SSH903R	713-045
CBR600SJR	1996	SSH903R	713-045
CBR600F4 Hurricane	99-01	SSH903R	713-045
VT600C Shadow VLX	88-89	SSH903	713-044
VT600C Shadow VLX	91-97	SSH903	713-044
VT600C Shadow	99-05	SSH903	713-044
VT600CD Shadow VLX Deluxe	93-98	SSH903	713-044
VT600CD Shadow Deluxe	99-06	SSH903	713-044
VT600CD2 Shadow Deluxe	99-00	SSH903	713-044
CB650	79-82	SSH750	713-030
CB650C Custom	80-81	SSH750	713-030
CB650SC Nighthawk	82-85	SSH750	713-030
CX650C	1983	SSH750	713-030
CX650T Turbo	1983	SSH903	713-044
GL650 Silverwing	1983	SSH750	713-030
GL650I Silverwing Interstate	1983	SSH750	713-030
NT650 Hawk GT	88-91	SSH903R	713-045
CB700SC Nighthawk	84-86	SSH903	713-044
VF700C Magna	84-87	SSH903	713-044
VF700F Interceptor	84-85	SSH903R	713-045
VFR700F Interceptor	1986	SSH903R	713-045
VFR700F2 Interceptor	86-87	SSH903R	713-045
VF700S Sabre	84-85	SSH903R	713-045
VT700C Shadow	84-85	SSH750	713-030
VT700C Shadow	86-87	SSH903	713-044
CB750 Nighthawk	91-93	SSH903	713-044
CB750 Nighthawk	95-03	SSH903	713-044
CB750A Automatic	76-78	SSH750	713-030
CB750C Custom	80-82	SSH903	713-044
CB750F Super Sport	75-78	SSH750	713-030
CB750F Super Sport	80-82	SSH903	713-044
CB750K	69-70	SSH750	713-030
CB750K	71-78	SSH750	713-030
CB750K	80-82	SSH903	713-044
CB750SC Nighthawk	82-83	SSH903	713-044
VF750C Magna	82-83	SSH903	713-044
VF750C Magna	1988	SSH903	713-044
VF750C Magna	94-03	SSH903	713-044
VF750CD Magna	95-96	SSH903	713-044
VF750C2 Magna Deluxe	97-03	SSH903	713-044
VF750F Interceptor	83-84	SSH903	713-044
VF750S Sabre	82-83	SSH903	713-044
VFR750F Interceptor	1986	SSH903R	713-045
VFR750F	90-97	SSH903R	713-045
VT750C Shadow	1983	SSH750	713-030
VT750C Shadow Ace 750	98-02	SSH903	713-044
VT750C Shadow Aero	04-06	SSH903	713-044
VT750CA Shadow Aero	04-06	SSH903	713-044
VT750CD Shadow Deluxe	98-02	SSH903	713-044
VT750CD2 Shadow Deluxe	98-02	SSH903	713-044
VT750CDA Shadow Ace 750	02-03	SSH903	713-044
VT750CDB Shadow Ace 750	02-03	SSH903	713-044
VT750CDC Shadow Ace 750	02-03	SSH903	713-044
VT750CDD Shadow Ace 750	02-03	SSH903	713-044
VT750DC Shadow Sprint 750	01-03	SSH903	713-044
VT750DCA Shadow Sprint 750	03-06	SSH903	713-044

Honda Street

Model	Year	Mfg. Ref #	Order No.
VT750DCB	03-06	SSH903	713-044
PC800 Pacific Coast	89-90	SSH903	713-044
PC800 Pacific Coast	94-98	SSH903	713-044
VFR800 Interceptor	02-06	SSH903R	713-045
VFR800A Interceptor ABS	02-06	SSH903R	713-045
VFR800FI Interceptor	98-01	SSH903R	713-045
VT800C Shadow	1988	SSH903R	713-045
CB900C Custom	80-82	SSH903	713-044
CB900F Super Sport	81-82	SSH903	713-044
CB900F 919	02-06	SSH903R	713-045
CBR900RR	93-99	SSH903R	713-045
CBR929RR	00-01	SSH903R	713-045
CBR954RR	02-03	SSH903R	713-045
CB1000	94-95	SSH903	713-044
CB1000C Custom	1983	SSH903	713-044
CBR1000F Hurricane	87-88	SSH903	713-044
CBR1000F Hurricane	90-91	SSH903B	713-044
CBR1000F Hurricane	93-96	SSH903	713-044
CBX1000	80-82	SSH903	713-044
GL1000 Goldwing	75-76	SSH750	713-030
GL1000L LTD	1976	SSH750	713-030
VF1000F Interceptor	1984	SSH903	713-044
VF1000R	85-86	SSH903	713-044
VTR1000F Super Hawk	98-05	SSH903R	713-045
CB1100F Super Sport	1983	SSH903	713-044
CBR1100XX Blackbird	97-03	SSH903R	713-045
GL1100 Goldwing	80-83	SSH903	713-044
GL1100A Goldwing Aspencade	82-83	SSH903	713-044
GL1100I Goldwing Interstate	80-83	SSH903	713-044
ST1100	91-02	SSH903R	713-045
ST1100A (ABS)	92-02	SSH903R	713-045
VF1100C Magna	83-86	SSH903R	713-045
VF1100S Sabre	84-85	SSH903R	713-045
VT1100C Shadow 1100	85-86	SSH903	713-044
VT1100C Shadow 1100	87-90	SSH903	713-044
VT1100C Shadow 1100	92-96	SSH903	713-044
VT1100C Shadow 1100 Spirit	97-01	SSH903	713-044
VT1100C2 Shadow ACE	95-99	SSH903	713-044
VT1100C2 Shadow Sabre	2000	SSH903	713-044
VT1100C2-2 ACE	1997	SSH903	713-044
VT1100C3 Shadow Aero	98-00	SSH903	713-044
VT1100D2 ACE	1999	SSH903	713-044
VT1100T ACE Tourer	98-00	SSH903	713-044
GL1200 Goldwing	1984	SSH903	713-044
GL1200A Goldwing Aspencade	84-87	SSH903	713-044
GL1200I Goldwing Interstate	84-87	SSH903	713-044
GL1200L Goldwing LTD	1985	SSH903	713-044
GL1200SEi	1986	SSH903	713-044
ST1300	03-06	SSH903R	713-045
ST1300A	03-06	SSH903R	713-045
VTX1300C	03-06	SSH903R	713-045
VTX1300R	05-06	SSH903R	713-045
VTX1300S	03-06	SSH903R	713-045
GL1500 Goldwing	88-90	SSH903	713-044
GL1500A Goldwing Aspencade	91-00	SSH903	713-044
GL1500I Goldwing Interstate	91-96	SSH903	713-044
GL1500SE Goldwing SE	90-00	SSH903	713-044
GL1500C Valkyrie	97-00	SSH903	713-044
GL1500C	2003	SSH903	713-044
GL1500CD	01-03	SSH903	713-044
GL1500CF Valkyrie Interstate	99-01	SSH903	713-044
GL1500CT Valkyrie Tourer	97-00	SSH903	713-044
VTX1800C	02-04	SSH903	713-044
VTX1800R	02-04	SSH903	713-044
VTX1800S	02-04	SSH903	713-044

Steering Stem Bearing Kits

Honda ATV

Model	Year	Mfg. Ref #	Order No.
ATC70/K1	73-74	SSH200	713-020
ATC70	78-85	SSH200	713-020
ATC90/K1/K2/K3	70-75	SSH200	713-020
ATC90	76-78	SSH200	713-020
ATC110	79-85	SSH200	713-020
ATC125M	84-87	SSH200	713-020
ATC185	1980	SSH200	713-020
ATC185S	81-83	SSH200	713-020
ATC200	81-83	SSH200	713-020
ATC200E Big Red	82-83	SSH200	713-020
ATC200ES Big Red	1984	SSH200	713-020
ATC200S	84-85	SSH200	713-020
ATC250R	83-86	SSH902	713-042

Honda Dual Sport & Offroad

CRF50F	04-11	SSH200	713-020
MR50/K1 Elsinore	74-75	SSH200	713-020
XR50R	00-03	SSH200	713-020
Z50AK3/AK4/AK5	72-75	SSH200	713-020
Z50A Mini Trail 50	76-78	SSH200	713-020
Z50R	79-87	SSH200	713-020
Z50RD Special	1986	SSH200	713-020
CR60R	1983	SSH200	713-020
CRF70F	04-07	SSH200	713-020
CL70/K1/K2/K3 Scrambler	69-73	SSH200	713-020
CT70 Trail 70	69-71	SSH200	713-020
CT70H/HK1 Trail 70H	70-73	SSH200	713-020
CT70K1/K2/K3/K4 Trail 70	72-75	SSH200	713-020
CT70 Trail 70	76-82	SSH200	713-020
SL70/K1	71-73	SSH200	713-020
XL70	74-76	SSH200	713-020
XL75	77-79	SSH200	713-020
XR75/K1/K2	73-75	SSH200	713-020
XR75	76-78	SSH200	713-020
CR80R	80-81	SSH200	713-020
CR80R	87-91	SSH902	713-042
CRF80F	04-09	SSH200	713-020
XL80S	80-85	SSH200	713-020
XR80	79-84	SSH200	713-020
XR80R	85-03	SSH200	713-020
CT90 Trail 90	66-68	SSH200	713-020
CT90K1-K6 Trail 90	69-75	SSH200	713-020
CT90 Trail 90	76-79	SSH200	713-020
SL90 Motosport	1969	SSH200	713-020
SL100/K1/K2/K3 Motosport	70-73	SSH200	713-020
CRF100F	04-11	SSH200	713-020
XL100/K1	74-75	SSH200	713-020
XL100	76-78	SSH200	713-020
XL100S	79-85	SSH200	713-020
XR100	81-84	SSH200	713-020
XR100R	85-03	SSH200	713-020
CT110 Trail 110	80-84	SSH200	713-020
CT110 Trail 110	1986	SSH200	713-020
CR125M/M1 Elsinore	74-78	SSH200	713-020
CR125R	82-83	SSH902	713-042
CR125R	84-89	SSH902R	713-043
CR125R	90-92	SSH904	713-046
CR125R	93-94	SSH905	713-047
CR125R	95-97	SSH907	713-049
CR125R	98-07	SSH905	713-047
CT125 Trail 125	1977	SSH200	713-020
MT125K Elsinore	74-76	SSH200	713-020
NX125	88-90	SSH902	713-042
SL125/K1/K2 Motosport	71-73	SSH200	713-020
TL125/K1/K2/S Trials	73-76	SSH200	713-020
XL125/K1	74-75	SSH200	713-020

Honda Dual Sport & Offroad

Model	Year	Mfg. Ref #	Order No.
XL125S	76-82	SSH200	713-020
XL125S	84-85	SSH200	713-020
MR175K Elsinore	75-77	SSH200	713-020
XL185S	79-83	SSH200*	713-020
XR185	1979	SSH200*	713-020
XL200R Dual Sport	83-84	SSH902	713-042
XR200 (2 shock)	80-84	SSH200*	713-020
XR200R Prolink	81-83	SSH902	713-042
XR200R Prolink	84-87	SSH902	713-042
XR200R	1988	SSH902R	713-043
XR200R	90-91	SSH902R	713-043
XR200R	93-03	SSH902R	713-043
CR250R	81-83	SSH902	713-042
CR250R	84-89	SSH902R	713-043
CR250R	90-91	SSH904	713-046
CR250R	92-94	SSH905	713-047
CR250R	95-96	SSH907	713-049
CR250R	97-05	SSH905	713-047
NX250	88-90	SSH902R	713-043
XL250R	82-87	SSH902R	713-043
XR250L	91-96	SSH902R	713-043
XR250R	81-82	SSH902	713-042
XR250R	84-87	SSH902R	713-043
XR250R	88-91	SSH902	713-042
XR250R	92-03	SSH902R	713-043
XL350R	84-85	SSH902	713-042
XR350R	83-85	SSH902	713-042
XR400R	97-04	SSH902	713-042
CR450R	1981	SSH902	713-042
CRF450R	02-08	SSH905	713-047
CRF450X	05-09	SSH905	713-047
CR480R	82-83	SSH902	713-042
CR500R	84-89	SSH902R	713-043
CR500R	90-01	SSH904	713-046
XL500R	1982	SSH902	713-042
XR500R	81-84	SSH902	713-042
XL600R	83-87	SSH902	713-042
XL600V Transalp	89-90	SSH902	713-042
XR600R	85-87	SSH902	713-042
XR600R	88-00	SSH902R	713-043
NX650	88-89	SSH902R	713-043
XR650L	93-07	SSH902R	713-043
XR650R	01-07	SSH902R	713-043

Kawasaki Street

EL250B2/B3 Eliminator	88-89	SSK400	713-630
EL250E1/E2/E3 250HS Eliminator	91-93	SSK400	713-630
EX250E1/E2 Ninja 250R	86-87	SSK400	713-630
EX250F6-F19 Ninja 250R	92-05	SSK400	713-630
EX250F6F Ninja 250R	2006	SSK400	713-630
S1A/B/C-250 (2-stroke triple)	73-75	SSK100	713-610
KH250A5 (2-stroke triple)	1976	SSK100	713-610
EX305B1 GPz	1983	SSK100	713-610
KZ305A1/A2 CSR	81-82	SSK100	713-610
KZ305B1 CSR Belt	1982	SSK100	713-610
KZ305B2/B3 LTD Belt	87-88	SSK100	713-610
S2/S2A 350 (2-stroke triple)	72-73	SSK100	713-610
S3/S3A-400 (2-stroke triple)	74-75	SSK100	713-610
KH400A3/A4/A5 (2-stroke triple)	76-78	SSK100	713-610
KZ400A1/A2 Deluxe	77-78	SSK100	713-610
KZ400B1/B2	78-79	SSK100	713-610
KZ400C1	1978	SSK100	713-610
KZ400/D/D3/D4	74-77	SSK100	713-610
KZ400H1 LTD	1979	SSK100	713-610
KZ400S/S2/S3 Special	75-77	SSK100	713-610
KZ440A1/A2/A3/A4 LTD	80-83	SSK100	713-610

Steering Stem Bearing Kits

Kawasaki Street

Model	Year	Mfg. Ref #	Order No.
KZ440B1/B2	80-81	SSK100	713-610
KZ440D1-D5 LTD Belt	80-83	SSK100	713-610
KZ440G1 Belt	1982	SSK100	713-610
EN450A1-A6 LTD 454	85-90	SSK902	713-650
H1C/D/E/F-500 (2-stroke triple)	72-75	SSK100	713-610
KH500A8 2-stroke triple	1976	SSK100	713-610
EN500A1-A6 Vulcan 500	90-96	SSK902	713-650
EN500C1-C10 Vulcan 500 LTD	96-05	SSK902	713-650
EN500C7F Vulcan 500 LTD	06-07	SSK902	713-650
EX500A1-A7	87-93	SSK400	713-630
EX500D1/D2/D3 Ninja 500	94-96	SSK400	713-630
EX500D4-D12 Ninja 500R	97-05	SSK400	713-630
EX500D6F-D9F Ninja 500R	06-09	SSK400	713-630
KZ550A1/A2/A3/A4	80-83	SSK400	713-630
KZ550C1/C2/C3/C4 LTD	80-83	SSK400	713-630
KZ550D1 GPz	1981	SSK400	713-630
KZ550H1/H2 GPz	82-83	SSK902	713-650
KZ550F1/F2 Spectre & LTD	83-84	SSK902	713-650
KZ550M1 LTD	1983	SSK902	713-650
ZR550B1/B2/B3/B4 Zephyr	90-93	SSK902	713-650
ZX550A1/A2 GPz	84-85	SSK902	713-650
ZX600A1/A2/A3 Ninja 600R	85-87	SSK902	713-650
ZX600B1 Ninja 600RX	1987	SSK902	713-650
ZX600C1-C10 Ninja 600R	88-97	SSK902	713-650
ZX600D1/D2/D3/D4 Ninja ZX-6	90-93	SSK902	713-650
ZX600E1-E10 Ninja ZX-6	93-02	SSK902	713-650
ZX600F1/F2/F3 Ninja ZX-6R	95-97	SSK902	713-650
EJ650A2/A3 W650	00-01	SSK902	713-650
KZ650B1/B2/B2A/B3	77-79	SSK400	713-630
KZ650C1/C2/C3 Custom	77-79	SSK400	713-630
KZ650D1/D1A/D2 SR	78-79	SSK400	713-630
KZ650E1/F1	1980	SSK400	713-630
KZ650H1/H2/H3 CSR	81-83	SSK400	713-630
KZ700A1	1984	SSK902	713-650
ZN700A1/A2 LTD	84-85	SSK902	713-650
H2/A/B/C-750 triple	72-75	SSK100	713-610
KZ750B1/B2 (2-cylinder)	76-77	SSK400	713-630
KZ750B3/B4 (2-cylinder)	78-79	SSK400	713-630
KZ750E1/E2/E3	80-82	SSK400	713-630
KZ750F1 LTD	1983	SSK902	713-650
KZ750G1 LTD (2-cylinder)	1980	SSK400	713-630
KZ750H1/H2/H3/H4 LTD	80-83	SSK400	713-630
KZ750K1/K2 LTD (2-cylinder)	83-84	SSK400	713-630
KZ750L3	1983	SSK902	713-650
KZ750M1 CSR (2-cylinder)	1982	SSK400	713-630
KZ750N1/N2 Spectre	82-83	SSK902	713-650
KZ750R1 GPz	1982	SSK902	713-650
ZR750C1/C2/C3 Zephyr	91-93	SSK902	713-650
ZR750F2 ZR-7	2000	SSK902	713-650
ZX750A1/A2/A3 GPz	83-85	SSK902	713-650
ZX750E1/E2 GPz Turbo	84-85	SSK902	713-650
ZX750F1/F2/F3/F4 Ninja 750R	87-90	SSK902	713-650
ZX750H1/H2 Ninja ZX-7	89-90	SSK902	713-650
ZX750J1/J2 Ninja ZX-7	91-92	SSK907	713-653
ZX750K1/K2 Ninja ZX-7R	91-92	SSK907	713-653
ZX750L1/L2/L3 Ninja ZX-7	93-95	SSK907	713-653
ZX750M1/M2 Ninja ZX-7R	93-94	SSK907	713-653
ZX750N1/N2 Ninja ZX-7RR	96-97	SSK907	713-653
ZX750P1-P6 ZX-7R	96-01	SSK907	713-653
VN800A1-A7 Vulcan 800	95-01	SSK902	713-650
VN800B1-B6 Vulcan 800 Classic	96-01	SSK902	713-650
VN800C1/C2/E1 Vulcan 800 Drifter	99-01	SSK902	713-650
Z1/A/B-900	73-75	SSK400	713-630
KZ900A4/A5	76-77	SSK400	713-630
KZ900B1 LTD	1976	SSK400	713-630
ZL900A1/A2 Eliminator	85-86	SSK902	713-650

Kawasaki Street

Model	Year	Mfg. Ref #	Order No.
ZX900A1/A2/A3 Ninja 900R	84-86	SSK902	713-650
ZX900B1/B2/B3/B4 Ninja ZX-9R	94-97	SSK907	713-653
ZX900C1/C2 Ninja ZX-9R	98-99	SSK907	713-653
KZ1000A1/A2/A2A	77-78	SSK400	713-630
KZ1000A3/A3A/A4 MKII	79-80	SSK400	713-630
KZ1000B1/B2/B3/B4 LTD	77-80	SSK400	713-630
KZ1000C1/C1A/C2/C3/C4 Police	78-81	SSK400	713-630
KZ1000D1 Z1R	1978	SSK400	713-630
KZ1000D3 Z1R	1980	SSK400	713-630
KZ1000G1 LTD Classic	1980	SSK400	713-630
KZ1000J1/J2/J3	81-83	SSK902	713-650
KZ1000K1/K2 LTD	81-82	SSK902	713-650
KZ1000M1/M2 CSR	81-82	SSK902	713-650
KZ1000P1-P21 Police	82-02	SSK902	713-650
KZ1000R1/R2 Replica	82-83	SSK902	713-650
ZG1000A1-A20 Concours	86-05	SSK902	713-650
ZL1000A1 Eliminator	1987	SSK902	713-650
ZX1000A1/A2 Ninja 1000R	86-87	SSK902	713-650
ZX1000B1/B2/B3 Ninja ZX-10	88-90	SSK902	713-650
KZ1100A1/A2/A3 Shaft	81-83	SSK902	713-650
KZ1100B1/B2 GPz	81-82	SSK902	713-650
KZ1100D1/D2 Spectre	82-83	SSK902	713-650
KZ1100L1 LTD	1983	SSK902	713-650
ZN1100B1/B2 LTD Shaft	84-85	SSK902	713-650
ZR1100A1-A4	92-95	SSK902	713-650
ZR1100C3/C4 ZRX1100	99-00	SSK902	713-650
ZX1100A1/A2 GPz	83-84	SSK902	713-650
ZX1100D1-D9 Ninja ZX-11	93-01	SSK907	713-653
ZG1200A1 Voyager XII	1986	SSH901	713-040
ZG1200B1-B17 Voyager XII	87-03	SSH901	713-040
VN1500A1-A9 Vulcan 88	87-95	SSK902	713-650
VN1500A10-A12 Vulcan 1500	96-98	SSK902	713-650
VN1500B1/B2/B3/B4 Vulcan 88 SE	87-90	SSK902	713-650
VN1500C3/C4 Vulcan 1500L	96-97	SSK902	713-650
VN1500D1/D2 Vulcan Classic	96-97	SSK902	713-650
VN1500E1-E4 Vulcan Classic	98-01	SSK902	713-650
VN1500G1/G1A/G2A/G3 Nomad	99-01	SSK907	713-653
VN1500J1/J2/R1 Vulcan Drifter	99-01	SSK907	713-653
VN1500L1/L2 Vulcan Nomad F.I.	00-01	SSK907	713-653
VN1500N1/N2 Vulcan Classic F.I.	00-01	SSK907	713-653

Kawasaki ATV

KXT250A1/A2/B1/B2 Tecate 3	84-87	SSH901	713-040

Kawasaki Dual Sport & Offroad

KX125B1/B2/C1/D1/E1/E2	82-87	SSH901	713-040
KX125F1/G1/H1/H2	88-91	SSH901	713-040
KDX200A1/A2/A3/C1/C2/C3	83-88	SSH901	713-040
KDX200E1/E2/E3/E4/E5/E6	89-94	SSH901	713-040
KDX200H1-H10	95-04	SSH901	713-040
KDX220A4-A11	97-04	SSH901	713-040
KDX250A1/B1/B2/B3/B4	80-84	SSH901	713-040
KL250D2-D22 KLR250	85-05	SSK902	713-650
KL250G4/G5/G6/G7 Super Sherpa	00-03	SSK902	713-650
KLX250D2/D3/D4	94-96	SSH901	713-040
KX250B1/C1/C2	82-84	SSH901	713-040
KX250D1/D2/E1/F1/G1/H1/H2	85-91	SSH901	713-040
KLX300A2-A10 KLX300R	97-05	SSK902	713-650
KLX300A6F	2006	SSK902	713-650
KDX420B1	1981	SSH901	713-040
KX420A1/A2	80-81	SSH901	713-040
KDX450A1	1982	SSH901	713-040
KX500A1/A2/B1/B2/C1/D1	83-88	SSH901	713-040
KX500E1-E16	89-04	SSH901	713-040
KL600A1/B1/B2 KLR600	84-86	SSK902	713-650
KL650A1-A19 KLR650	87-05	SSK902	713-650

Steering Stem Bearing Kits

Kawasaki Dual Sport & Offroad

Model	Year	Mfg. Ref #	Order No.
KL650A6F KLR650	2006	SSK902	713-650
KL650B2 Tengai KLR650	1990	SSK902	713-650
KLX650A1/A2/A3 Offroad	93-95	SSH901	713-040
KLX650C1/C2/C3/C4 Dual Sport	93-96	SSH901	713-040
KLX650D1 Offroad	1996	SSH901	713-040

Suzuki Street

GN250Z/D/F	82-85	SSH901	713-040
GN250J	1988	SSH901	713-040
GS250TT/TX	80-81	SSS250	713-410
GT250A/B Hustler	76-77	SSS250	713-410
GS300LZ/LD	82-83	SSS250	713-410
GS300LF	1985	SSS250	713-410
GT380K/L/M/A/B Sebring	73-77	SSS250	713-410
GN400T/XT/XX/TX/TZ	80-82	SSH901	713-040
GS400B/XB/C/XC	77-78	SSS250	713-410
GSF400M/N/P Bandit	91-93	SSH901	713-040
GS425N/EN/LN	1979	SSS250	713-410
GS450ET/EX/EZ/ED	80-83	SSH901	713-040
GS450GAZ/GAD Automatic	82-83	SSH901	713-040
GS450GAF Automatic	1985	SSH901	713-040
GS450LT/LX/LZ/LD	80-83	SSH901	713-040
GS450LF/LG/LH/LJ	85-88	SSH901	713-040
GS450ST/SX	80-81	SSH901	713-040
GS450TX/TZ	81-82	SSH901	713-040
GS450TXZ/TXD	82-83	SSH901	713-040
GS500EK-K2	89-02	SSH901	713-040
GT500A/B Titan	76-77	SSS250	713-410
RE-5M/A Rotary	75-76	SSS250	713-410
GS550B/C/EC/N/EN	77-79	SSS250	713-410
GS550ET	1980	SSH901	713-040
GS550ED/ESD	1983	SSH901	713-040
GS550ES3/ESE/EF/ESF/ESG	83-86	SSH901	713-040
GS550LN	1979	SSS250	713-410
GS550LT/LX/LZ/LD	80-83	SSH901	713-040
GS550LF/LG	85-86	SSH901	713-040
GS550MZ Katana	1982	SSH901	713-040
GS550TX	1981	SSH901	713-040
GT550J/K/L/M/A/B Indy	72-77	SSS250	713-410
GSF600ST-SK3 Bandit	96-03	SSH901	713-040
GSX600FJ-K6 Katana	88-06	SSH901	713-040
GSX-R600WN/WP	92-93	SSH901	713-040
GSX-R600V-K5	97-05	SSS903	713-451
RF600RR/RS/RT	94-96	SSH901	713-040
GR650D/XD Tempter	1983	SSH901	713-040
GS650EX/EZ	81-82	SSH901	713-040
GS650GX/GZ/GD	81-83	SSH901	713-040
GS650GLX/GLZ/GLD	81-83	SSH901	713-040
GS650MDKatana	1983	SSH901	713-040
LS650PS-PK4 Savage	95-04	SSH901	713-040
SV650X/Y/K1/K2/K3/K4/K5 /K6/K7	99-07	SSH901	713-040
SV650SX-SK7	99-07	SSH901	713-040
XN85D Turbo	1983	SSH901	713-040
GS700EF/ESF	1985	SSH901	713-040
GV700GLF/GLF2 Madura	1985	SSH901	713-040
VS700G Intruder	86-87	SSH901	713-040
GS750B/C/EC/N/EN	77-79	SSS250	713-410
GS750ET/EX/EZ	80-82	SSH901	713-040
GS750ED/ESD	1983	SSH901	713-040
GS750LN	1979	SSS250	713-410
GS750LT/LX	80-81	SSH901	713-040
GS750TZ/TD	82-83	SSH901	713-040
GS750SD Katana	1983	SSH901	713-040

Suzuki Street

Model	Year	Mfg. Ref #	Order No.
GSX750FK-FK7 Katana	89-07	SSH901	713-040
GSX-R750RG	1986	SSH901	713-040
GSX-R75G/H/J/K/L/M/N	86-92	SSH901	713-040
GSX-R750WP/WR/WS	93-95	SSH901	713-040
GSX-R750T/V/W/X/Y	96-00	SSS903	713-451
GSX-R750K1/K2/K3/K4/K5	01-05	SSS903	713-451
GT750J/K/L/M/A/B Lemans	72-77	SSS250	713-410
VS750GLPJ-GLPM Intruder	88-91	SSH901	713-040
VS800GLPN-GLPK4 Intruder	92-04	SSH901	713-040
VX800L/M/N/P	90-93	SSH901	713-040
VZ800V-K4 Marauder	97-04	SSH901	713-040
GS850GN/GT/GX/GZ/GD	79-83	SSH901	713-040
GS850GLT/GLX/GLZ/GLD	80-83	SSH901	713-040
RF900RR/RS/RT/RV	94-97	SSH901	713-040
DL1000K2-K5 V-Storm	02-05	SSS903R	———
GS1000C/EC/N/EN	78-79	SSH901	713-040
GS1000ET	1980	SSH901	713-040
GS1000GT/GLT/GX/GLX	80-81	SSH901	713-040
GS1000LN	1979	SSH901	713-040
GS1000SN/ST	79-80	SSH901	713-040
GS1000SZ Katana	1982	SSH901	713-040
GSX-R1000K1/K2/K3/K4/K5	01-05	SSS903	713-451
TL1000SV-SK1	97-01	SSS903	713-451
TL1000RW-RK3	98-03	SSS903R	———
GS1100ET/EX/EZ/ED/ESD	80-83	SSH901	713-040
GS1100GZ/GLZ/GD/GLD	82-83	SSH901	713-040
GS1100LT	1980	SSH901	713-040
GS1100SD Katana	1983	SSH901	713-040
GSX1100FJ-FP Katana	88-93	SSH901	713-040
GSX1100GM/GN/GP Shaft	91-93	SSH901	713-040
GSX-R1100G/H/J/K/L/M/N	86-92	SSH901	713-040
GSX-R1100WP-WW	93-98	SSH901	713-040
GS1150ES3/ESE/EF/ESF/EG	83-86	SSH901	713-040
GSF1200SV-SK6 Bandit	97-06	SSH901	713-040
GSF1200SAV Bandit	1997	SSH901	713-040
GV1200GLF/GLF2/GLG Madura	85-86	SSH901	713-040
GV1400GCG/GCH Cavalcade LXE	86-87	SSH901	713-040
GV1400GDG-GDJ Cavalcade LX	86-88	SSH901	713-040
GV1400GTG/GTH Cavalcade	86-87	SSH901	713-040
VS1400GLPH-GLPK2 Intruder	87-02	SSH901	713-040
VL1500W/X/Y/K1/K2/K3 Intruder	98-03	SSH901	713-040

Suzuki Dual Sport & Offroad

RM100N/T/X	79-81	SSY125	713-230
DR125SER/SES/SET Dual Sport	94-96	SSH901	713-040
RM125/A/B/C	75-78	SSS250	713-410
RM125N/T	79-80	SSY125	713-230
RM125J	1988	SSH901	713-040
PE175C/N	78-79	SSS250	713-410
PE175T/X	80-81	SSH901	713-040
PE175Z/D/E	82-84	SSH901	713-040
RS175T/X/Z	80-82	SSH901	713-040
DR200SET-SEK6 Dual Sport	96-06	SSH901	713-040
DR250L/M/N/P Offroad	90-93	SSH901	713-040
DR250SL-SES Dual Sport	90-95	SSH901	713-040
PE250C/N	78-79	SSS250	713-410
PE250T/X	80-81	SSH901	713-040
RM250A/B/C/C2	76-78	SSS250	713-410
RM250N/T	79-80	SSY125	713-230
RM250J	1988	SSH901	713-040
RS250T/X	80-81	SSH901	713-040
SP250Z/D	82-83	SSS902	713-450
SP250F	1985	SSS902	713-450

Steering Stem Bearing Kits

Suzuki Dual Sport & Offroad

Model	Year	Mfg. Ref #	Order No.
TM250J/K/L/M	72-75	SSS250	713-410
TS250R/J/K/L/M/A/B/C/N	71-79	SSS250	713-410
DR350L-X Offroad	90-99	SSH901	713-040
DR350SL-SEX Dual Sport	90-99	SSH901	713-040
RM370A/B	76-77	SSS250	713-410
SP370C/N Dual Sport	78-79	SSS250	713-410
DR400T	1980	SSH901	713-040
PE400T/X	80-81	SSH901	713-040
RM400C	1978	SSS250	713-410
RM400N/T	79-80	SSY125	713-230
SP400T Dual Sport	1980	SSS250	713-410
TM400	73-75	SSS250	713-410
TS400	73-77	SSS250	713-410
DR500X/Z/D	81-83	SSH901	713-040
RM500D/E	83-84	SSS902	713-450
SP500X/Z/D Dual Sport	81-83	SSH901	713-040
DR650SN/SP/SER/SES Dual Sport	92-95	SSH901	713-040

Yamaha Street

Model	Year	Mfg. Ref #	Order No.
RX50K	1983	SSY080	713-210
RX50MK Midnight Special	1983	SSY080	713-210
YSR50T/U/W/A/B/D	87-92	SSY080	713-210
RD60/A/B	73-75	SSY080	713-210
L5T/L5TA 100	69-70	SSY125	713-230
RD125B/C	75-76	SSY125	713-230
TA125		SSY125	713-230
TD2/TD2B/TR2/TR2B-125	70-71	SSY125	713-230
TZ125G	1980	SSY125	713-230
SR185H/J Exciter	81-82	SSY080	713-210
RD200A/B/C	74-76	SSY125	713-230
RD250/A/B	73-75	SSY125	713-230
SR250G/H/J Exciter	80-82	SSY125	713-230
SR250TH Exciter II	1981	SSY125	713-230
SRX250T/TC	1987	SSY125	713-230
TD3/TR3 250 (Race)	1972	SSY125	713-230
TZ250 (Race)	1973	SSY125	713-230
TZ250C/D/E (Race)	76-78	SSY125	713-230
TZ250F/G/H/J (Race)	79-82	SSH901	713-040
XV250U/UC/W/WC Route 66	88-89	SSY125	713-230
XV250A/AC Route 66	1990	SSY125	713-230
XV250G/GC-L/LC Route 66	95-99	SSY125	713-230
XV250M/MC-T/TC Virago 250	00-05	SSY125	713-230
R5/B/C 350	70-72	SSY125	713-230
RD350/A/B	73-75	SSY125	713-230
RZ350L/N/NC/NCII	84-85	SSY125	713-230
TZ350/C/D/E	74-78	SSY125	713-230
XS360C/D/2D	76-77	SSY125	713-230
FZR400U/SUC/W/SWC/A/SAC	88-90	SSH901	713-040
RD400C/D/E/F	76-79	SSY125	713-230
XS400D/E/F	77-79	SSY125	713-230
XS4002E/2F	78-79	SSY125	713-230
XS400G/H Special II	80-81	SSY125	713-230
XS400J/K Maxim	82-83	SSY125	713-230
XS400RJ/RK Seca	82-83	SSY125	713-230
XS400SG/SH Special	80-81	SSY125	713-230
XS400SJ Heritage Special	1982	SSY125	713-230
SR500E/F/G/H	78-81	SSY080	713-210
TX500/A	73-74	SSY500	713-240
XS500B/C/D/E	75-78	SSY500	713-240
XT500C/D/E/F/G/H Dual Sport	76-81	SSY080	713-210
XV500K Virago	1983	SSY125	713-230
XV535T/TC/U Virago	87-88	SSY125	713-230
XV535A/AC Virago	1990	SSY125	713-230

Yamaha Street

Model	Year	Mfg. Ref #	Order No.
XV535E/EC-L/LC Virago	93-99	SSY125	713-230
XV535SF/SFC-SJ/SJC Virago	94-97	SSY125	713-230
XJ550H/J/K Maxim	81-83	SSY125	713-230
XJ550RH/RJ/RK Seca	81-83	SSY125	713-230
XZ550RJ/RK Vision	82-83	SSY500	713-240
FJ600L/LC/N/NC	84-85	SSY125	713-230
FZ600S/SC/T/TC/U/UC	86-88	SSY500	713-240
FZR600W/WC/AC	89-90	SSH901	713-040
FZR600RA/RAC-RL/RLC	90-99	SSH901	713-040
XJ600SD/SDC-SK/SKC Seca II	92-98	SSH901	713-040
SRX600S/SC	1986	SSY500	713-240
YX600S/SC-A/AC Radian	86-90	SSY125	713-230
YZF600RG/RGC-RV/RVC	95-06	SSH901	713-040
YZF-R6L/LC-T/TC	99-05	SSS903R	———
YZF-R6SN/SNC Champions LTD. ED	2001	SSS903R	———
XS1/XS1B/XS2 650	70-72	SSY500	713-240
TX650/A	73-74	SSY500	713-240
XS650B/C/D/E/F/2F	75-79	SSY500	713-240
XS650G/H Special II	80-81	SSY500	713-240
XS650SE/SF/SG/SH	78-81	SSY500	713-240
XS650SJ/SK Heritage Special	82-83	SSY500	713-240
XJ650G/H/J/K Maxim	80-83	SSY500	713-240
XJ650LH Midnight Maxim	1981	SSY500	713-240
XJ650LJ/LK Seca Turbo	82-83	SSY500	713-240
XJ650RJ Seca	1982	SSY500	713-240
XVS650L/LC-T/TC V-Star	99-05	SSH901	713-040
XVS650AK/AKC-ATC V-Star Classic	98-05	SSH901	713-040
XVS650ATR/ATRC/ATS Silverado	03-04	SSH901	713-040
XVS650ATT/ATTC V-Star Silverado	2005	SSH901	713-040
XVS650K/KC-T/TC V-Star Custom	98-05	SSH901	713-040
FZ700T/TC	1987	SSH901	713-040
FZX700S/SC/T/TC Fazer	86-87	SSH901	713-040
XJ700N/NC/S/SC Maxim	85-86	SSH901	713-040
XJ700XN/XNC/XS/XSC Maxim X	85-86	SSH901	713-040
XV700L/LC/N/NC Virago	84-85	SSH901	713-040
XV700CS/CSC/CT/CTC Virago	86-87	SSH901	713-040
XV700SS/SSC Virago	1986	SSH901	713-040
FZ750N/S/SC	85-86	SSH901	713-040
FZ750U/UC	1988	SSH901	713-040
FZR750RT/RU	87-88	SSH901	713-040
TX750/A	73-74	SSY500	713-240
XS750D/2D/E/F	77-79	SSH901	713-040
XS750SE/SF Special	78-79	SSH901	713-040
XJ750J/K Maxim	82-83	SSY500	713-240
XJ750MK Midnight Maxim	1983	SSY500	713-240
XJ750RH/RJ/RK Seca	81-83	SSY500	713-240
XV750H/J/K Virago	81-83	SSY500	713-240
XV750MK Midnight Virago	1983	SSY500	713-240
XV750U/UC-G/GC Virago	88-95	SSH901	713-040
XV750H1/HC1/J1/J1C Virago	96-97	SSH901	713-040
YZF750RF/RFC	1994	SSH901	713-040
YZF750RH/RHC/RK/RKC	96-98	SSH901	713-040
TDM850D/DC/E/EC	92-93	SSH901	713-040
XS850G/H	80-81	SSH901	713-040
XS850LG/LH Midnight Special	80-81	SSH901	713-040
XS850SG/SH Special	80-81	SSH901	713-040
XJ900RK Seca	1983	SSH901	713-040
XV920J/K/MK Virago	82-83	SSY500	713-240
XV920RH/RJ	81-82	SSY500	713-240
FZR1000T/TC-G/GC	87-95	SSH901	713-040
FZS1000N/NC-T/TC FZ1	01-05	SSH901	713-040
XV1000L/LC/N/NC Virago	84-85	SSH901	713-040
YZF1000RJ/RJC	1997	SSH901	713-040

Steering Stem Bearing Kits

Yamaha Street

Model	Year	Mfg. Ref #	Order No.
YZF1000RK/RKC	1998	SSS903R	———
YZF-R1L/LC-T/TC	99-05	SSS903R	———
YZF-R1SN/SNC Champions LTD.ED.	2001	SSS903R	———
FJ1100L/LC/N/NC	84-85	SSH901	713-040
XJ1100J Maxim	1982	SSH901	713-040
XS1100E/F/G/H	78-81	SSH901	713-040
XS1100LG/LH Midnight Special	80-81	SSH901	713-040
XS1100SF/SG/SH Special	79-81	SSH901	713-040
XV1100S/SC-L/LC Virago	86-99	SSH901	713-040
XV1100SH/SHC-SK/SKC Virago	96-98	SSH901	713-040
XVS1100A V-Star 1100 Classic	00-04	SSH901	713-040
XVS1100A V-Star 1100 Silverado	03-05	SSH901	713-040
XVS1100AT V-Star 1100 Silverado	2005	SSH901	713-040
XVS1100AW V-Star 1100 Classic	03-05	SSH901	713-040
XVS1100L/LC-S/SC V-Star Custom	99-04	SSH901	713-040
FJ1200S/SC/T/TC	86-87	SSH901	713-040
FJ1200W/WC/A/AC/B/BC/D/DC	89-92	SSH901	713-040
FJ1200AD/ADC/AE/AEC (ABS)	92-93	SSH901	713-040
VMX12N/NC/S/SC V-Max	85-86	SSH901	713-040
VMX12U/UC-V/VC V-Max	88-06	SSH901	713-040
XVZ12TK Venture	1983	SSH901	713-040
XVZ12TDK Venture Royale	1983	SSH901	713-040
XVZ12L/KC2 Venture	1984	SSH901	713-040
XVZ13DL/DN Venture Royale	84-85	SSH901	713-040
XVZ12DKC2 Venture Royale	1984	SSH901	713-040
XVZ13DS/DSC/DTC Venture Royale	86-87	SSH901	713-040
XVZ13T/TC/U/UC Venture	87-88	SSH901	713-040
XVZ13D Venture Royale	89-93	SSH901	713-040
XVZ13AH/AHC-AN/ANC Royal Star	96-01	SSH901	713-040
XVZ13AT Royal Star Tour Classic	96-00	SSH901	713-040
XVZ13LT Royal Star Tour Deluxe	97-01	SSH901	713-040
XVZ13TF Royal Star Venture	99-01	SSH901	713-040
XVZ13TFS Venture Limited Edition	2000	SSH901	713-040
XVZ1300CTT Royal Star Tour Deluxe	2005	SSH901	713-040
XVZ1300TFS Royal Star Midnight	02-04	SSH901	713-040
XVZ1300TFSMC Royal Star Venture	2000	SSH901	713-040
XVZ1300TF Royal Star Venture	99-04	SSH901	713-040
XV1600A Road Star	99-03	SSH901	713-040
XV1600AT Road Star Silverado	99-03	SSH901	713-040
XV1600 Road Star Limited Edition	2003	SSH901	713-040
XV1600AS Road Star Midnight	01-03	SSH901	713-040
XV1700AM Road Star Midnight	04-05	SSH901	713-040
XV1700AS/ASC/AT/ATC Road Star	04-05	SSH901	713-040
XV1700ATS/ATSC/ATT/ATTC	04-05	SSH901	713-040
XV1700AWT/AWTC Road Star	2005	SSH901	713-040

Yamaha ATV

YT125N Tri-Moto	1985	SSY080	713-210
YT175J/K Tri-Moto	82-83	SSY080	713-210
YTM200K/EK Tri-Moto	1983	SSY080	713-210
YTM200N/ERN Tri-Moto	1984	SSY125	713-230
YTM225DXK/DXL/DXN Tri-Moto	83-85	SSY080	713-210
YTM225DRN/DRS Tri-Moto	85-86	SSY125	713-230

Yamaha Dual Sport & Offroad

DT50U/W/A	88-90	SSY080	713-210
YZ50G	1980	SSY080	713-210
JT2/JT2MX-60 Mini	1972	SSY080	713-210
YZ60H/J/K	81-83	SSY080	713-210
BW80S/T/U/A	86-90	SSY080	713-210
DT80H/J/K	81-83	SSY080	713-210
GT80A-G	74-80	SSY080	713-210
GT1/GTMX-80	1973	SSY080	713-210

Yamaha Dual Sport & Offroad

Model	Year	Mfg. Ref #	Order No.
GTMXA/MXB/MXC-80	74-76	SSY080	713-210
GTMXD/MXE/MXF-80	77-79	SSY080	713-210
MX80G/H/J	80-82	SSY080	713-210
TY80A/B Trials	74-75	SSY080	713-210
YZ80A/B/C/D/E/F/G/H/J/K	74-83	SSY080	713-210
HT1/HT1B/HT1BM-90 Enduro	70-71	SSY080	713-210
TT-R90M/MC-EV	00-06	SSY080	713-210
DT100A-K	74-83	SSY080	713-210
LT2/LT3-100	72-73	SSY080	713-210
LT2M/LT2MX-100	72-73	SSY080	713-210
MX100A/B	74-75	SSY080	713-210
MX100F/G/H/J/K	79-83	SSY080	713-210
RS100B/C	75-76	SSY080	713-210
RT100A-M	90-00	SSY080	713-210
YZ100C/D/E/F/G/H	76-81	SSY080	713-210
YZ100J/K	82-83	SSH901	713-040
AT1M/AT1MB-125	69-70	SSY080	713-210
AT1MX/AT2M/ATMX-125	71-73	SSY080	713-210
AT1E/AT1B/AT1C-125 Enduro	69-71	SSY080	713-210
AT2/AT3-125 Enduro	72-73	SSY080	713-210
DT125A-H Enduro	74-81	SSY080	713-210
IT125G/H	80-81	SSY080	713-210
MX125A/B/C	74-76	SSY080	713-210
XT125J/K/KC Dual Sport	82-83	SSY080	713-210
YZ125A/B/C/X	74-76	SSY080	713-210
YZ125D/E/F/G/H/J	77-82	SSH901	713-040
YZ125K/L/N/S	83-86	SSH901	713-040
YZ125T/U/W/A/B/D1	87-92	SSY901	———
YZ125E1/F1/G1	93-95	SSY901	———
YZ125H1-T1	96-05	SSY903T	———
CT1/B/C/CT2/CT3 175 Enduro	69-73	SSY080	713-210
DT175A/B/C	74-76	SSY080	713-210
DT175F/G/H	79-81	SSY080	713-210
IT175D/E/F/G/H/J/K	77-83	SSH901	713-040
MX175A/B	74-75	SSY080	713-210
MX175G/H/J	79-81	SSY080	713-210
TY175B/C Trials	75-76	SSY080	713-210
YZ175C	1976	SSY080	713-210
BW200N/S/ES/ET/EU	85-88	SSY080	713-210
IT200L/N/S	84-86	SSH901	713-040
TW200T/TC-N/NC Trailway	87-01	SSY080	713-210
XT200J/K/KC Dual Sport	82-83	SSY080	713-210
DT1/DT1B/DT1S-250 Enduro	68-69	SSY080	713-210
DT1C/DT1E/DT2/DT3-250 Enduro	70-73	SSY080	713-210
DT250A/B/C/D/E/F Enduro	74-79	SSY080	713-210
DT1CMX/DT1MX-250	1971	SSY080	713-210
DT2MX-250	1972	SSY080	713-210
IT250D/E/F/G/H/J	77-82	SSH901	713-040
IT250K	1983	SSH901	713-040
MX250/A/B	73-75	SSY080	713-210
TT250G/H/J	80-82	SSY080	713-210
TT250RL/RLC	1999	SSY901	———
TT-R250N/NC-T/TC	01-05	SSY901	———
TY250A/C/D Trials	74-77	SSY080	713-210
WR250FP/FR/FS/FT	02-05	SSY903T	———
WR250ZB/ZD/ZE/ZF/ZG/ZH/ZJ	91-97	SSY901	———
XT250G/H/J/K/KC Dual Sport	80-83	SSY080	713-210
XT250L/LC Dual Sport	1984	SSH901	713-040
YZ250A/B/C	74-76	SSY080	713-210
YZ250D/E/F/G/H/J	77-82	SSH901	713-040
YZ250K/L/N/S	83-86	SSH901	713-040
YZ250T-G1	87-95	SSY901	———
YZ250H1-T1	96-05	SSY903T	———

Yamaha Dual Sport & Offroad

Model	Year	Mfg. Ref #	Order No.
YZ250FN-FV	01-06	SSY903T	———
YZ250WRW/WRA	89-90	SSY901	———
TT350S/T Offroad	86-87	SSH901	713-040
XT350N/NC-M/MC Dual Sport	85-00	SSH901	713-040
RT1M/RT1/RT2MX-360	70-72	SSY080	713-210
MX360/A	73-74	SSY080	713-210
RT1/RT1B/RT2/RT3-360 Enduro	70-73	SSY080	713-210
DT360A	1974	SSY080	713-210
YZ360A/B	74-75	SSY080	713-210
DT400B/C/D/E	75-78	SSY080	713-210
IT400C	1976	SSY080	713-210
IT400D/E/F	77-79	SSH901	713-040
MX400B	1975	SSY080	713-210
YZ400C	1976	SSY080	713-210
YZ400D/E/F	77-79	SSH901	713-040
YZ400FK/FL	98-99	SSY903T	———
WR400FK/FL/FM	98-00	SSY903T	———
IT425G	1980	SSH901	713-040
WR426FN/FP	01-02	SSY903T	———
YZ426FM/FN/FP	00-02	SSY903T	———
WR450FR/FS/FT/FV	03-06	SSY903T	———
YZ450FR/FS/FT/FV	03-06	SSY903T	———
IT465H/J	81-82	SSH901	713-040
YZ465G/H	80-81	SSH901	713-040
IT490K/L	83-84	SSH901	713-040
YZ490J/K/L/N/S/T/U/W/A	82-90	SSH901	713-040
SC500/A Scrambler	73-74	SSY080	713-210
TT500C/D/E/F/G/H Offroad	76-81	SSY080	713-210
XT500C/D/E/F/G/H Dual Sport	76-81	SSY080	713-210
WR500ZD/ZE	92-93	SSY901	———
XT550J/K Dual Sport	82-83	SSH901	713-040
TT600K/L/N/S Offroad	83-86	SSH901	713-040
XT600L/LC-G/GC	84-95	SSH901	713-040

Brake Master Cylinder Rebuild Kits

850-120

850-131

Brake Master Cylinder Rebuild Kits

Complete kits contain all necessary components to rebuild one OEM master cylinder. ***Made in Japan***

Honda Street

Model	Year	Front	Rear
CB50R Dream	2004	850-102	———
NSR50R	2004	850-112	———
CB125TT	1990	850-102	———
CMX250C Rebel 250	85-87	850-112	———
CMX250C Rebel 250	96-97	850-112	———
CMX250C Rebel 250	99-09	850-112	———
CMX250C2 Rebel	99-00	850-112	———
CMX250CD Rebel 250 Limited	1986	850-112	———
CN250 Helix (Scooter)	86-87	850-102	———
CN250 Helix (Scooter)	92-01	850-102	———
CN250 Helix (Scooter)	04-07	850-102	———
NSS250 Reflex 250 (Scooter)	01-07	850-112	850-102
NSS250A Reflex 250 ABS (Scooter)	01-07	850-112	850-102
NSS250AS (Scooter)	04-07	850-112	850-102
NSS250S Reflex 250 Sport (Scooter)	04-07	850-112	850-102
PS250 Big Ruckus (Scooter)	05-06	850-112	850-102
VTR250R Interceptor	88-90	850-112	———
CB360 G/T	73-76	850-103	———
CB400 Super Sport	75-77	850-103	———
CB400F CB-1	89-90	———	850-122
CB400T Hawk	1981	850-102	———
CM400A Automatic	1981	850-102	———
CM400C Custom	1981	850-102	———
CM400T	1981	850-102	———
CB450SC Nighthawk	82-83	850-102	———
CB450SC Nighthawk	85-86	850-102	———
CB450T Hawk	1982	850-102	———
CM450A Automatic	82-83	850-102	———
CM450C Custom	82-83	850-102	———
CMX450C Rebel	86-87	850-112	———
CX500C Custom	81-82	850-102	———
CX500D Deluxe	1981	850-102	———
FT500 Ascot (Single Cylinder)	82-83	850-102	———
GB500	89-90	850-112	———
GL500 Silver Wing	81-82	850-102	———
VF500C Magna	84-85	850-102	———
VF500F Interceptor	84-86	———	850-120
VT500C Shadow	83-86	850-102	———
VT500FT Ascot	83-84	850-102	———
CB500T	75-76	850-103	———
CB550SC Nighthawk	1983	850-102	———
CB550F/K	75-76	850-103	
CB600F (599)	2004	850-112	850-122
CB600F (599)	2006	850-112	850-122
CBR600F Hurricane	87-90	850-102	850-120
CBR600F2 Hurricane	91-94	850-112	850-120
CBR600F3 Hurricane	95-98	850-112	850-122
CBR600F4 Hurricane	99-00	———	850-122
CBR600F4i Hurricane	01-06	———	850-122
CBR600RA	09-10	———	850-122
CBR600SE	1998	850-112	850-122
CBR600SJR Replica	1996	850-112	850-122
CB650	81-82	850-102	———

Honda Street

Model	Year	Front	Rear
CX650C Custom	1983	850-102	———
NT650 Hawk GT	88-91	850-112	850-120
XR650L Dual Sport	93-09	850-113	850-120
XR650L Dual Sport	2012	850-113	850-120
NSA700A	2009	850-102	———
VF700C Magna	1987	850-112	———
VF700F Interceptor	84-85	———	850-122
VFR700F/F2 Interceptor	86-87	———	850-120
VT700C Shadow	86-87	850-102	———
CB750A	1976	850-103	———
CB750F	75-76	850-103	———
CB750K0/K1/K2/K3/K4/K5/K	69-76	850-103	———
CB750K	81-82	850-102	———
RVF750R (RC45)	1994	———	850-122
VF750C Magna	1988	850-112	———
VF750F Interceptor	83-84	———	850-122
VFR750F	90-97	850-112	850-120
VFR750F Interceptor	1986	———	850-120
VFR750R (RC30)	1990	———	850-122
PC800 Pacific Coast	89-90	850-102	———
PC800 Pacific Coast	94-98	850-102	———
VFR800	02-09	850-102	———
VFR800A (ABS)	02-09	850-102	———
VT800C Shadow	1988	850-112	———
CB900F (919)	02-06	850-102	850-120
CB1000	94-95	850-102	850-122
CBR1000F Hurricane	87-88	———	850-120
CBR1000F Hurricane	90-91	850-102	850-120
CBR1000RR	2006	———	850-122
RVT1000R (RC51)	00-06	———	850-122
VF1000F Interceptor	1984	———	850-122
VF1000R	85-86	———	850-120
VTR1000F Super Hawk	98-05	———	850-122
GL1100I Goldwing Interstate	1983	850-102	———
ST1100	91-02	850-102	850-120
ST1100A ABS	92-02	850-102	850-120
VT1100C Shadow Spirit	97-06	850-112	———
VT1100C2 Shadow 1100 ACE	95-99	850-112	850-120
VT1100C2 Shadow Sabre	00-06	850-112	850-120
VT1100C3 Shadow Aero	98-02	850-112	850-120
VT1100D2 Shadow 1100 ACE	1999	850-112	850-120
VT1100T Shadow 1100 ACE	98-01	850-112	850-120
GL1200A Gold Wing Aspencade	84-87	850-112	———
GL1200I Gold Wing Interstate	84-87	850-112	———
VTX1300C	04-06	———	850-120
VTX1300R	05-06	———	850-120
VTX1300S	03-04	850-112	850-120
VTX1300S	05-06	———	850-120
GL1500C Valkyrie	97-00	———	850-120
GL1500C Valkyrie	2003	———	850-120
GL1500CD Valkyrie	01-03	———	850-120
GL1500CF Valkyrie Interstate	99-01	———	850-120
GL1500CT Valkyrie Tourer	97-00	———	850-120
VTX1800C	02-04	850-102	———
VTX1800C1	05-07	850-102	———
VTX1800C2	05-06	850-102	———
VTX1800C3	05-06	850-102	———

Brake Master Cylinder Rebuild Kits

Honda Street

Model	Year	Front	Rear
VTX1800F1	05-08	850-102	—
VTX1800F2	05-07	850-102	—
VTX1800F3	05-08	850-102	—
VTX1800N1	04-08	850-102	—
VTX1800N2	04-07	850-102	—
VTX1800N3	04-08	850-102	—
VTX1800R	02-03	850-102	—
VTX1800R1	04-07	850-102	—
VTX1800R2	04-07	850-102	—
VTX1800R3	04-07	850-102	—
VTX1800S	02-03	850-102	—
VTX1800S1	04-06	850-102	—
VTX1800S2	04-06	850-102	—
VTX1800S3	04-06	850-102	—
VTX1800T1	07-08	850-102	—
VTX1800T2	2007	850-102	—
VTX1800T3	2008	850-102	—

Honda ATV

ATC200X	86-87	850-112	850-122
TRX200 Fourtrax 200	1984	850-112	—
TRX200 Fourtrax 200	90-91	850-112	—
TRX200D Fourtrax Type II	91-97	850-112	—
TRX200SX Fourtrax	86-88	850-112	—
ATC250R	85-86	850-112	—
TRX250 Fourtrax 250	85-86	850-112	—
TRX250 Recon	97-01	850-112	—
TRX250EX Sportrax 250EX	01-06	850-112	—
TRX250TE Fourtrax Recon ES	02-06	850-112	—
TRX250TM Fourtrax Recon	02-06	850-112	—
TRX250R Fourtrax 250R	1986	—	850-122
TRX250R Fourtrax 250R	87-89	850-113	850-122
TRX250X Fourtrax	87-88	850-113	850-120
TRX250X Fourtrax	91-92	850-113	850-120
TRX300 Fourtrax 300	88-00	850-112	—
TRX300EX Fourtrax 300EX	93-00	850-113	850-120
TRX300EX Sportrax 300EX	01-04	850-113	850-120
TRX300EX Sportrax 300EX	05-06	850-112	850-120
TRX300FW Fourtrax 300 4x4	1988	850-114	—
TRX300FW Fourtrax 300 4x4	90-00	850-114	—
ATC350X	85-86	850-112	—
TRX350 Fourtrax 4x4	86-87	850-112	—
TRX350D Fourtrax Fourman 4x4	1987	850-112	—
TRX350FE Rancher 4x4 ES	00-03	850-112	—
TRX350FM Fourtrax Rancher 4x4	00-03	850-112	—
TRX350TE Fourtrax Rancher ES	00-03	850-112	—
TRX350TM Fourtrax Rancher	00-03	850-112	—
TRX400EX Fourtrax 400 EX	99-00	850-112	850-122
TRX400EX Sportrax 400 EX	01-06	850-112	850-122
TRX400FW Fourtrax Foreman	95-03	850-114	—
TRX450ER	2006	—	850-120
TRX450FE Fourtrax Foreman ES	02-04	850-114	—
TRX450FM Fourtrax Foreman S	02-05	850-114	—
TRX450R	04-06	—	850-120
TRX450S	98-01	850-114	—
TRX500FA Foreman Rubicon	01-04	850-114	—
TRX500FGA Foreman Rubicon GPS	2004	850-114	—

Honda Dual Sport & Offroad

CR80R	92-97	—	850-120
CR80R	98-99	850-111	850-120
CR80R	00-02	850-110	850-120
CR80RB Expert	92-97	—	850-120
CR80RB Expert	98-99	850-111	850-120
CR80RB Expert	00-02	850-110	850-120
CR85R	03-07	850-110	850-120
CR85RB Expert	03-07	850-110	850-120
CR125R	1986	850-111	—
CR125R	87-99	850-111	850-120
CR125R	00-01	850-110	850-120

Honda Dual Sport & Offroad

Model	Year	Front	Rear
CR125R	02-07	850-110	850-121
CRF150R	07-09	850-110	—
CRF150R	2012	850-110	—
CRF150RB	07-09	850-110	—
CRF150RB	2012	850-110	—
CRF230L Dual Sport	08-09	—	850-122
CRF230M Motard	2009	—	850-122
CR250R	1986	850-111	—
CR250R	87-99	850-111	850-120
CR250-R	00-01	850-110	850-120
CR250R	02-07	850-110	850-121
CRF250R	04-06	850-110	850-121
CRF250R	07-12	—	850-121
CRF250X	04-06	850-110	850-121
CRF250X	07-09	850-110	850-121
NX250	88-90	—	—
XR250L Dual Sport	91-96	850-113	850-121
XR250R	86-89	—	—
XR250R	90-95	—	850-120
XR250R	96-99	850-111	850-122
XR250R	00-04	850-110	850-122
XR350R	1985	850-111	—
XR400R	96-99	850-111	850-120
XR400R	00-04	850-110	850-120
CRF450R	02-06	850-110	850-121
CRF450R	07-12	—	850-121
CRF450X	05-09	850-110	850-121
CRF450X	2012	850-110	850-121
CR500R	1986	850-111	—
CR500R	87-99	850-111	850-120
CR500R	00-01	850-110	850-120
XR600R	1985	850-111	—
XR600R	86-90	—	—
XR600R	91-00	—	850-120
XR650L Dual Sport	93-09	850-113	850-120
XR650L Dual Sport	2012	850-113	850-120
XR650R	00-07	850-110	850-120

Kawasaki Street

S2/S2A-350 2-stroke triple	72-73	850-100	—
S3/S3A-400 2-stroke triple	74-75	850-100	—
KH400A3/A4 2-stroke triple	76-77	850-100	—
KLX400A1 KLX400SR Dual Sport	2003	—	850-110
KZ400A1/A2	77-78	850-100	—
KZ400/D/D3/D4	74-77	850-100	—
EX500D1/D2/D3 Ninja 500	94-96	850-170	850-171
EX500D4-D12 Ninja 500R	97-05	850-170	850-171
EX500D6F/D7F Ninja 500R	06-07	850-170	850-171
H1B 500 2-stroke triple	1972	850-100	—
H1D/H1E/H1F 500 2-stroke triple	73-75	850-100	—
KH500A8 2-stroke triple	1976	850-100	—
ZR550B1/B2 Zephyr	90-91	—	850-171
ZR550B3/B4 (Canada)	92-93	—	850-171
ZX600E1-E10 Ninja ZX-6	93-02	—	850-171
ZX600E11/E12 ZZR600	03-04	—	850-171
ZX600F1/F2/F3 Ninja ZX-6R	95-97	—	850-171
ZX600G1 Ninja ZX-6R	1998	—	850-171
ZX600K1 Ninja ZX-6RR	2003	850-170	—
ZX600M1 Ninja ZX-6RR	2004	850-170	—
ZX636B1/B2 Ninja ZX-6R	03-04	850-170	—
EX650A6F/A7F Ninja 650R	06-07	—	850-171
KL650A1-A19 KLR650	87-05	—	850-171
KL650A6F/A7F KLR650	06-07	—	850-171
KL650B2/B3 Tengai KLR	90-91	—	850-171
KZ650B1	1977	850-100	—
H2/A/B/C-750 2-stroke triple	72-75	850-100	—
ZX750J1/J2 Ninja ZX-7	91-92	—	850-171
ZX750K1/K2 Ninja ZX-7R	91-92	—	850-171
ZX750L1/L2/L3 Ninja ZX-7	93-95	—	850-171
ZX750M1/M2 Ninja ZX-7R	93-94	—	850-171

Brake Master Cylinder Rebuild Kits

Kawasaki Street

Model	Year	Front	Rear
VN800C2 Vulcan 800 Drifter 2000	2000	850-170	—
VN800E1-E6F Vulcan 800 Drifter	01-08	850-170	—
Z1/Z1A/Z1B-900	73-75	850-100	—
KZ900A4/A5	76-77	850-100	—
ZX900B1/B2/B3/B4 Ninja ZX-9R	94-97	—	850-171
ZX900C1/C2 Ninja ZX-9R	98-99	—	850-171
ZX900E1/E2 Ninja ZX-9R	00-01	—	850-171
ZX900F1/F2 Ninja ZX-9R	02-03	—	850-171
KZ1000A1	1977	850-100	—
ZR1000A1/A2/A3 Z1000	03-05	—	850-171
ZX1100E1/E2/E3 Gpz	95-97	—	850-171
ZX1100F1 GPz (ABS)	1996	—	850-171
VN1500J1/J2 Vulcan 1500 Drifter	99-00	850-170	—
VN1500N1/N2/N3 Vulcan 1500 Classic FI.	00-02	850-170	—
VN1500R1-R5 Vulcan 1500 Drifter	01-05	850-170	—

Kawasaki ATV

KSF250A1 Mojave	1987	—	850-171
KSF250A2-A17 Mojave	88-03	850-170	850-171
KSF250A18 KFX250	2004	850-170	850-171
KXF250A1/A2 Tecate 4	87-88	—	850-171
KXT250B2 Tecate 3	1987	—	—
KEF300A1-A6 Lakota 300	95-00	850-170	850-171
KEF300B1/B2/B3 Lakota Sport	01-03	850-170	850-171
KLF300A1/A2 Bayou	86-87	850-170	—
KLF300B1-B17 Bayou 300	88-04	850-170	—
KLF300C1-C16 Bayou 300 4x4	89-04	850-170	—
KVF300A1-A4 Prairie 300 4x4	99-02	850-170	—
KVF300B1-B4 Prairie 300	99-02	850-170	—
KVF360A1/A2/A3 Prairie 360 4x4	03-05	850-170	—
KVF360A6F/A7F Prairie 360 4x4	06-07	850-170	—
KVF360B1/B2/B3 Prairie 360	03-05	850-170	—
KVF360B6F/B7F Prairie 360	06-07	850-170	—
KVF360C1 Prairie 360 4x4 Advantage Classic	2003	850-170	—
KVF360C2/C3 Prairie 360 4x4 Hardwoods	04-05	850-170	—
KVF360C6F/C7F Prairie 360 4x4 Hardwoods	06-07	850-170	—
KLF400B1-B7 Bayou 4x4	93-99	850-170	—
KSF400A1/A2/A3/A6F KFX400	03-06	850-150	—
KVF400A1/A2 Prairie 400 4x4	97-98	850-170	—
KVF400B1 Prairie 400 2x4	1998	850-170	—
KVF400C1-C4 Prairie 400 4x4	99-02	850-170	—
KVF400D1-D4 Prairie 400	99-02	850-170	—
KSF450B8F/BFA/B9F KFX450R	08-09	—	850-171
KSF450B9FB KFX450R Monster Energy	2009	—	850-171
KSF450BAF/BBF KFX450R	10-11	—	850-171
KVF650A1/A2 Prairie 650 4x4	02-03	850-170	—
KVF650B1/B2 Prairie 650 4x4 Advantage	02-03	850-170	—
KVF650D1/D6F/D7F Brute Force 650 4x4	05-07	850-170	—
KVF650E1/E6F/E7F Brute Force 650 4x4 Hardwoods	05-07	850-170	—
KSV700A1/A2/A6F/A7F KFX700 V-Force	04-07	850-170	—
KSV700B1/B2/B6F/B7F KFX700 V-Force	04-07	850-170	—
KSV700C6F KFX700 V-Force	2006	850-170	—
KVF700A1/A2/A6F Prairie 700 4x4	04-06	850-170	—
KVF700B1/B2 Prairie 700 4x4 Hardwoods	04-05	850-170	—

Kawasaki Dual Sport & Offroad

KX65A1/A2/A3/A4/A5/A6F/A7F	00-07	—	850-171
KX80L1/L2/L3	88-90	—	850-171
KX80N1/N2/N3	88-90	—	850-171
KX80R1/R2/R3	91-93	—	850-171
KX80T1/T2/T3	91-93	—	850-171
KX80T4/R4/R5/R6/R7	94-97	—	850-171
KX80W1/W2/W3	98-00	—	850-171
KX85A1/A2/A3/A4/A5	01-05	850-181	850-171
KX85A6F/A7F	06-07	850-181	850-171
KX100B5/B6/B7	95-97	—	850-171
KX100C1/C2/C3	98-00	—	850-171
KX100D1/D2/D3/D4/D5	01-05	850-181	850-171

Kawasaki Dual Sport & Offroad

Model	Year	Front	Rear
KX100D6F/D7F	06-07	850-181	850-171
KX125E1	1986	—	850-171
KX125E2/F1/G1	87-90	—	850-171
KX125K1/K2/K3	94-96	—	850-171
KX125K4/K5/L1	97-99	850-180	850-171
KX125L2	2000	—	850-171
KX125L3/L4	01-02	850-181	850-171
KX125M1/M2/M3	03-05	850-181	850-171
KDX200E1/E2/E3/E4/E5/E6	89-94	—	850-171
KDX200H1-H11	95-05	—	850-171
KDX220A4-A12	97-05	—	850-171
KL250G4-G7 Super Sherpa	00-03	—	850-171
KX250D2	1986	—	850-171
KX250E1/F1/G1	87-89	—	850-171
KX250H1/H2	90-91	—	850-171
KX250K1/K2/K3	94-96	—	850-171
KX250K4/K5/L1	97-99	850-180	850-171
KX250L2	2000	—	850-171
KX250L3/L4	01-02	850-181	850-171
KX250M1/M2/M3	03-05	850-181	850-171
KX250N1/N2 KX250F	04-05	850-181	850-171
KX250R6F/R7F	06-07	850-181	850-171
KX250T6F/T7F KX250F	06-07	850-181	850-171
KLX300A2-A10	97-05	—	850-171
KLX300A6F/A7F	06-07	—	850-171
KLX400A1/A1L KLX400SR Dual Sport	2003	850-110	—
KLX400B1 KLX400R Offroad	2003	850-110	—
KX450D6F/D7F	06-07	850-181	850-171
KX500B2	1986	—	850-171
KX500C1/D1	87-88	—	850-171
KX500E1/E2	89-90	—	850-171
KX500E3/E4/E5	91-93	—	—
KX500E6-E15	94-03	—	850-171
KX500E16	2004	850-181	850-171
KL650A1-A19 KLR650	87-05	—	850-171
KL650A6F/A7F KLR650	06-07	—	850-171
KL650B2/B3 Tengai KLR650	90-91	—	850-171
KLX650A1/A2/A3 KLX650R	93-95	—	850-171
KLX650C1/C2/C3/C4 Dual Sport	93-96	—	850-171
KLX650D1 KLX650R Offroad	1996	—	850-171

Suzuki Street

GN125EV	1997	850-150	—
DR-Z400SY/SK1-SK7	00-07	850-110	850-120
DR-Z400SMK5/SMK6 Supermotard	05-06	850-110	850-120
GSF400M/N/P Bandit	91-93	850-150	850-120
GS500EK-EK2	89-02	850-150	850-120
GS550LD	1983	850-150	—
GS550LF/LG	85-86	850-150	—
GSF600ST/SV/SW/SX Bandit	96-99	850-151	850-120
GSF600SY/SK1/SK2/SK3 Bandit	00-03	—	850-120
GSX600FJ Katana	1988	850-151	850-120
GSX600FK-FV Katana	89-97	—	850-120
GSX600FW-FK6 Katana	98-06	850-151	850-120
GSX-R600WN/WP	92-93	—	850-120
GSX-R600V/W/X/Y	97-00	850-151	850-120
GSX-R600K1/K2/K3	01-03	—	850-120
RF600RR/RS/RT	94-96	850-150	850-120
RF900RR/RS/RT/RV	94-97	—	850-120
DR650SL/SM/SN/SP/SER/SES Dual	90-95	850-151	—
DR650SET-SEK7 Dual Sport	96-07	850-150	850-120
GS650GLD	1983	850-151	—
LS650FG/FH Savage	86-87	850-150	—
LS650PG/PH/PJ Savage	86-88	850-150	—
LS650PS-PK4 Savage	95-04	850-150	—
LS650 Boulevard S40	05-07	850-150	—
SV650X/Y/K1/K2	99-02	—	850-120
SV650SX/SY/SK1/SK2	99-02	—	850-120
VS700GLEFG/GLEFH Intruder	86-87	850-151	—
VS700GLEPG/GLEPH Intruder	86-87	850-151	—
VS700GLFG/GLFH Intruder	86-87	850-151	—

Brake Master Cylinder Rebuild Kits

Suzuki Street

Model	Year	Front	Rear
VS700GLPG/GLPH Intruder	86-87	850-151	———
GSX750FK-FK6 Katana	89-06	850-151	850-120
GSX-R750G/H	86-87	———	850-160
GSX-R750J/K	88-89	850-151	850-160
GSX-R750L/M/N	90-92	———	850-160
GSX-R750WP/WR/WS	93-95	———	850-120
GSX-R750T/V/W/X/Y	96-00	———	850-120
GSX-R750K1-K6	01-03	———	850-120
VS750GLPJ-GLPM Intruder	88-91	850-150	———
VL800K1-K4 Volusia	01-04	850-150	———
VS800GLN-GLK4 Intruder	92-04	850-150	———
VS800G Boulevard S50	05-06	850-150	———
VX800L/M/N/P	90-93	850-150	———
VZ800V-K4 Marauder	97-04	850-150	———
VZ800K5/K6 Boulevard M50	05-06	850-150	———
RF900RR/RS/RT/RV	94-97	———	850-120
RF900RZS	1995	———	850-120
GSX-R1000K1/K2	00-02	———	850-120
TL1000RW-RK3	98-03	———	850-120
TL1000SV/SW/SX/SY/SK1	97-01	850-151	850-120
GSX1100FJ-FP Katana	88-93	850-151	850-120
GSX1100GM/GN/GP Shaft	91-93	———	850-120
GSX-R1100G/H	86-87	———	850-160
GSX-R1100J/K	88-89	850-151	850-160
GSX-R1100K/L/M/N	89-92	850-151	———
GSX-R1100WP-WW	93-98	———	850-120
GSF1200SAV Bandit	1997	———	850-120
GSF1200SV/SW/SX/SY Bandit	97-00	———	850-120
GSF1200SK1-SK5 Bandit	01-05	———	850-120
GSX1300RK-RK6 Hayabusa	99-06	———	850-120
GV1400GCG/GCH Cavalcade LXE	86-87	———	850-120
GV1400GDG/GDH/GDJ Cavalcade LX	86-88	———	850-120
GV1400GTG/GTH Cavalcade	86-87	———	850-120
VL1500W-K1 Intruder 1500 LC	98-01	850-150	———
VL1500K2/K3/K4 Intruder 1500 LC	02-04	———	850-120
VL1500LC Boulevard C90	05-06	———	850-120
VL1500LC Boulevard C90T	2006	———	850-120

Suzuki ATV

LT230EH-EP Quadrunner	87-93	850-150	850-160
LT230GEF/GEG Quadrunner	85-86	850-150	———
LT230SF/SG/SH/SJ Quadsport	85-88	850-150	850-160
LTF230G/H Quadrunner	86-87	850-150	———
LT250EFF/EFG	85-86	850-151	———
LT250RF-RN Quadracer	85-92	850-150	850-160
LT250SK/SL Quadrunner	89-90	850-150	850-160
LT-Z250K4/K5/K6/K7 Quadsport	04-07	850-150	———
LT300EH/EJ/EK Quadrunner	87-89	850-150	———
LT-4WDH Quadrunner	1987	850-150	———
LT-Z400K3/K4/K5/K6/K7 Quadsport	03-07	850-150	———
LT500RH/RJ/RK/RL Quadracer	87-90	850-150	850-160
LT-A500FY Vinson 4WD	2000	850-151	———
LT-F500FW-FK2 Quadrunner	98-02	850-151	———

Suzuki Dual Sport & Offroad

RM85K2/K3/K4	02-04	———	850-120
RM85K5/K6/K7/K8/K9/L0	05-10	850-152	850-120
RM85LK2/LK3/LK4	02-04	———	850-120
RM85LK5/LK6/LK7/LK8/LK9/LK0	05-10	850-152	850-120
RM125J	1988	———	850-160
RM125K/L/M	89-91	———	850-160
RM125N	1992	———	850-120
RM125T/V/W/X/Y/K1/K2/K3	96-03	850-153	850-120
RM125K4/K5/K6/K7/K8	04-08	850-152	850-120
DR250L/M/N/P	90-93	———	850-120
DR250SL/SM/SN/SP/SER/SES Dual Sport	90-95	850-110	850-120
RM250T/V/W/X/Y/K1/K2/K3	96-03	850-153	850-120
RM250K4/K5/K6/K7	04-07	850-152	850-120

Suzuki Dual Sport & Offroad

Model	Year	Front	Rear
RM-Z250K4/K5/K6	04-06	850-181	850-171
DR350L-X Offroad	90-99	———	850-120
DR350SL-SEX Dual Sport	90-99	850-110	850-120
DR-Z400Y/K1-K6	00-06	850-153	850-120
DR-Z400EY/EK1-EK7	00-07	850-153	850-120
DR-Z400SY/SK1-SK7 Dual Sport	00-07	850-110	850-120
DR-Z400SMK5/SMK6 Supermotard	05-06	850-110	850-120
RM-Z450K5-K9/L0/L1/L2/L3	05-13	850-152	———
DR650SL/SM/SN/SP/SER/SES Dual Sport	90-95	850-151	———
DR650SET-SEK7 Dual Sport	96-07	850-150	850-120

Yamaha Street

YSR50T/U/W/A/B/D	87-92	850-107	———
RX50K/L	83-84	850-105	———
RX50MK	1983	850-105	———
SRX250T/TC	1987	850-108	———
XV250U/UC/W/WC/A/AC Route66	88-90	850-108	———
XV250G-X	95-08	850-108	———
XV250RC/XR/YCR/YR	08-09	850-108	———
RZ350L/N/NC/NCII	84-85	850-133	850-144
XS400J/K Maxim	82-83	850-108	———
XS400RJ/RK Seca	82-83	850-108	———
XV500K Virago	1983	850-108	———
XV535T/TC/U/UC Virago 535	87-88	850-105	———
XV535A/AC Virago 535	1990	850-105	———
XV535E/EC-M/MC Virago 535	93-00	850-105	———
XV535SF/SFC/SG/SGC Virago 535	94-95	850-105	———
XV535SJ/SJC Virago 535	1997	850-105	———
XJ550H/J/K Maxim	81-83	850-108	———
XJ550RH/RJ/RK Seca	81-83	850-108	———
XZ550RJ Vision	1982	850-108	———
XZ550RK Vision	1983	850-133	———
XJ650G/H/J/K Maxim	80-83	850-105	———
XJ650LH Midnight Maxim	1981	850-105	———
XJ650LJ/LK Seca Turbo	82-83	850-133	———
XJ650RJ Seca	1982	850-133	———
XJ700N/NC/S/SC Maxim	85-86	850-133	———
XJ700XN/XNC/XS/XSC Maxim X	85-86	850-133	———
XV700L/LC/N/NC Virago	84-85	850-133	———
XV700CS/CSC/CT/CTC Virago	86-87	850-133	———
XV700SS/SSC Virago	1986	850-133	———
XJ750J/K Maxim	82-83	850-133	———
XJ750MK Midnight Maxim	1983	850-133	———
XV750H/J/K Virago 750	81-83	850-105	———
XV750MK Midnight Virago 750	1983	850-105	———
XV750U/UC-H/HC Virago	88-96	850-133	———
XV750H1/H1C/J1/J1C Virago	96-97	850-133	———
XJ900RK Seca	1983	850-133	———
XV920J Virago	1982	850-133	———
XV920K Virago	1983	850-105	———
XV920MK Midnight Virago	1983	850-105	———
XV920RH/RJ	81-82	850-133	———
FZR1000W/WC/A/AC	89-90	850-133	850-143
FZR1000B/BC-G/GC	91-95	———	850-143
XV1000L/LC/N/NC Virago	84-85	850-133	———
XJ1100J Maxim	1982	850-105	———
XS1100LH	1981	850-105	———
XV1100S/SC-L/LC Virago	86-99	850-133	———
XV1100SH/SHC-SK/SKC Virago	96-98	850-133	———
XVZ12KC/KC2/DL/DK/TK/DN	83-85	850-108	———
XVZ1200L/LC/DL/DN	84-85	850-108	———
XVZ1300AH/AHC/AJ/AJC/AK/AKC	96-98	850-133	———
Royal Star			
XVZ1300AL/ALC/AM/AMC/AN/ANC	99-01	850-133	———
Boulevard			
XVZ1300ATH/ATHC-ATM/ATMC	96-00	850-133	———
Royal Star Tour Classic			
XVZ1300CTT/CTTC Royal Star Tour Deluxe	2005	850-133	———
XVZ1300CTV/CTVC Royal Star Tour Deluxe	2006	850-133	———
XVZ1300CTMVC Royal Star	2006	850-133	———

Brake Master Cylinder Rebuild Kits

Yamaha Street

Model	Year	Front	Rear
XVZ1300LTJ/LTJC-LTN/LTNC	97-01	850-133	———
Royal Star Tour Deluxe			
XVZ1300TFSMC Royal Star Venture MM	2000	850-133	———
XVZ1300TFL/TFLC-TFV/TFVC	99-06	850-133	———
Royal Star Venture			
VZ1300TFSP/TFSPC-TFMV/TFMVC	02-06	850-133	———
Royal Star Midnight Venture			
XV1600AL/ALC-AR/ARC Road Star	99-03	850-133	———
XV1600ATL/ATLC-ATR-ATRC	99-03	850-133	———
Road Star Silverado			
XV1600ASM/ASMC Road Star MM Limited	2000	850-133	———
XV1600ASN/ASNC-ASR/ASRC	01-03	850-133	———
Road Star Midnight			
XV1600ALER/ALERC	2003	850-133	———
Road Star Limited Edition			
XXV1600ATLER/ATLERC	2003	850-133	———
Road Star Silverado Limited Edition			

Yamaha ATV

Model	Year	Front	Rear
YTZ250N Tri-Z	1985	850-108	850-144
YTZ250S Tri-Z	1986	———	850-144
YFM350FHL/FHLC Big Bear	1999	850-133	———
4WD Hunter			
YFM350FWBJ/FWBK/FWBKC	97-98	850-132	———
Big Bear 4WD			
YFM350FWBL/FWBLC Big Bear 4WD	1999	850-133	———
YFM350FWH Big Bear 4WD	1996	850-132	———
YFM350FWT-FWG Big Bear 4WD	87-95	850-132	———
YFM350FXG/FXH/FXJ/FXK	95-98	850-132	———
Wolverine 4WD			
YFM350FXL/FXLC/FXM/FXMC	99-00	850-132	———
Wolverine 4WD			
YFM350FXN Wolverine 4WD	2001	850-132	———
YFM350FXP/FXR Wolverine 4WD	02-03	———	
YFM350UH/UJ Big Bear 2WD	96-97	850-132	———
YFM350UL/ULC Big Bear 2x4	1999	850-133	———
YFM350XT Warrior	1987	———	850-144
YFM350XU/XW Warrior	88-89	850-132	850-144
YFM350XA-XS/XSC Warrior	90-01	850-132	850-143
YFM350XP/XPC-XS/XSC Warrior	02-04	850-134	850-143
YFZ350T-N Banshee	87-01	850-132	850-144
YFZ350P/R/S/T/V Banshee	02-06	850-134	———
YFZ350LER/LES Banshee L.E.	03-04	850-134	———
YFZ350RB Banshee Limited Edition	2003	850-134	———
YFZ350SET/SEV Banshee SE	05-06	850-134	———
YFZ350SPV Banshee SP	2006	850-134	———
YFM350RS/RT/RV Raptor 350	04-06	850-134	———
YFM350RSET/RSEV Raptor 350 SE	05-06	850-134	———
YFM400AM/AMC/AN/ANC Kodiak 2WD	00-01	850-132	———
YFM400FAHM/FAHMC Kodiak	2000	850-132	———
4WD Hunter			
YFM400FAHN Kodiak 4WD	2001	850-132	———
Real Tree Hunter			
YFM400FAM/FAMC/FAN Kodiak 4WD	00-01	850-132	———
YFM400FHM Big Bear Buckmaster 4WD	2000	850-132	———
YFM400FM/FMC Big Bear 4WD	2000	850-132	———
YFM400FWE/FWF/FWG Kodiak 4WD	93-95	850-132	———
YFM400FWH/FWJ/FWK Kodiak 4WD	96-98	850-132	———
YFM400FWBL/FWBLC Kodiak 4WD	1999	850-133	———
YFM400HN Big Bear 2WD	2001	850-132	———
Real Tree Hunter			
YFM400NM/NMC Big Bear 2WD	2000	850-132	———
YFZ450S/T/V	04-06	850-134	850-145
YFZ450BBV Bill Balance Edition	2006	850-134	850-145
YFZ450LES Limited Edition	2004	850-134	850-145
YFZ450SET Special Edition	2005	850-134	850-145
YFZ450SPV Special Edition	2006	850-134	850-145
YFM600FWAK/FWAKC Grizzly	98-99	850-133	———

Yamaha ATV

Model	Year	Front	Rear
YFM600FM/FMC/FN Grizzly	00-01	850-133	———
YFM600FWHM/FWHMC	2000	850-133	———
Grizzly Real Tree			
YFM600FHN Grizzly Real Tree Hunter	2001	850-133	———
YFM660RN/RNC/RP Raptor 660R	01-02	850-134	850-145
YFM660RR/RS/RT Raptor 660R	03-05	850-134	850-145
YFM660RLER Raptor 660R	2003	850-134	850-145
Limited Edition			
YFM660RLES Raptor 660R	2004	850-134	850-145
Limited Edition			
YFM660RSET Raptor SE	2005	850-134	850-145
YFM700RV Raptor 700	2006	850-134	850-145
YFM700RSPV Raptor 700	2006	850-134	850-145

Yamaha Dual Sport & Offroad

YZ80S/T/U/W/A/B/D	86-90	850-107	———
YZ80E1/F1/G1/H1	93-96	850-107	850-140
YZ80J1/K1/L1/M1	97-00	———	850-140
YZ80N1	2001	850-130	850-140
YZ85P/R/S/T/V	02-06	850-131	850-140
YZ125U/W	88-89	———	850-140
YZ125A/B/D1/E1/F1/G1	90-95	———	850-140
YZ125H1/J1/K1/L1/M1	96-00	———	850-141
YZ125N	1985	850-107	———
YZ125S/T/U/W	86-89	850-107	———
YZ125N1	2001	850-130	850-141
YZ125P	2002	850-131	850-141
YZ125R/S/T/V	03-06	850-131	850-142
IT200S	1986	850-107	———
WR200RD	1992	———	850-140
TT225L/LC	1999	850-107	———
TT-R230T/TC/V	05-06	850-131	———
TT250RL/RLC	1999	———	850-144
TT-R250M/MC/N/NC/P/PC	00-02	———	850-144
TT-R250R/RC/S/SC/T/TC/V/VC	03-06	875-107	850-144
TT-R250R/RC/S/SC/T/TC/V/VC	03-06	875-107	850-144
WR250ZB/ZD/ZE/ZF/ZG/ZH	91-96	———	850-140
WR250ZJ	1997	———	850-141
WR250FN	2001	850-130	850-141
WR250FP	2002	850-131	850-141
WR250FR/FS/FT/FV	03-06	850-131	850-142
YZ250FN	2001	850-130	850-141
YZ250FP	2002	850-131	850-141
YZ250FR/FS/FT/FV	03-06	850-131	850-142
YZ250SPV	2006	850-131	850-142
YZ250N/S/T/U/W/WRW	85-89	850-107	———
YZ250U/W	88-89	———	850-140
YZ250A/B/D1/E1/F1/G1	90-95	———	850-140
YZ250H1/J1/K1/L1/M1	96-00	———	850-141
YZ250N1	2001	850-130	850-141
YZ250P	2002	850-131	850-141
YZ250R/S1/T1/V	03-06	850-131	850-142
YZ250WRW	1989	———	850-140
YZ250WRA	1990	———	850-140
TT350S/T	86-87	850-107	———
XT350	85-00	850-107	———
WR400FM	2000	———	850-141
WR426FN	2001	850-130	850-141
WR426FP	2002	850-131	850-141
YZ426FM	2000	———	850-141
YZ426FN	2001	850-130	850-141
YZ426FP	2002	850-131	850-141
WR450FR/FS/FT/FV	03-06	850-131	850-142
YZ450FR/FS/FT/FV	03-06	850-131	850-142
YZ450SPV	2006	850-131	850-142
YZ490A/N/S/T/U/W	85-89	850-107	———
WR500ZD/ZE	92-93	———	850-140
TT600N/S	85-86	850-107	———
XT600L/LC-W/WC Dual Sport	84-89	850-108	———
XT600EEC-EGC Dual Sport	90-95	850-108	———

Sudco Part Number to OEM Cross Reference
Brake Master Cylinder Rebuild Kits

Honda

OEM Reference	Order No.
43520-KZ4-J41	850-121
43520-KZ4-J43	850-121
45520-MB2-305	850-122
43520-MB2-315	850-122
43520-MJ6-305	850-120
43520-MJ6-315	850-120
45530-377-305	850-103
45530-471-831	850-112
45530-HC5-006	850-114
45530-KCE-671	850-110
45530-KJ1-701	850-113
45530-KJ1-702	850-113
45530-KN5-305	850-111
45530-MN9-305	850-112
45530-MA4-671	850-102

Kawasaki

43020-0016	850-181
43020-1056	850-170
43020-1063	850-171
43020-1094	850-171
43020-1112	850-180
43020-1123	850-181
43020-S004	850-150
43020-S006	850-110
43073-001	850-100

Suzuki

59600-04810	850-150
59600-36830	850-153
59600-37810	850-152
59600-45850	850-151
69600-04810	850-160
69600-04820	850-120
69600-16820	850-160
K4302-00016	850-181
K4302-01123	850-181

Yamaha

1FK-W0042-50-00	850-140
1J3-W0041-20-00	850-106
23L-W0041-00-00	850-108
29L-W0042-50-00	850-144
2KR-W0042-50-00	850-143
3GD-W0042-00-00	850-143
4GY-W0042-00-00	850-144
4H7-W0041-00-00	850-105
4H7-W0041-50-00	850-132
4K0-W0041-00-00	850-133
4K0-W0041-50-00	850-133
4SS-W0042-50-00	850-141
56A-W0041-00-00	850-107
5LP-W0041-00-00	850-134
5MV-W0041-00-00	850-130
5NY-W0041-00-00	850-131
5NY-W0041-01-00	850-131
5TG-W0042-50-00	850-145
5UN-W0042-50-00	850-142

Motion Pro Master Cylinder Snap-Ring Pliers

Allows removal of internal snap rings used in hydraulic master cylinders Replaces Honda# 07914-SA50001, can be used to remove and replace small to medium internal snap rings up to 50mm deep, including those used for transmission gear locating, bearing retention, and oil seal retention, applicable to some fork seal retaining rings.

Order No. 950-775

Master Cylinders

Nissin Master Cylinders

Remote reservoir master cylinders from Nissin feature powerful stopping performance. Lever angle is adjustable to four different positions. Fits 7/8" handlebars. ***Made in Japan.***
Note: Suzuki models need M10 x P1.25mm banjo bolt.

Clutch, 5/8" Piston & Silver Body

Description	Order No.
Master Cylinder with 5/8" Piston & Silver Lever	850-001
Master Cylinder Rebuild Kit with 5/8" Piston	850-020
Master Cylinder Reservoir Tank & Hose	850-022
Clutch Lever for Master Cylinder	850-023

Clutch, 14mm Piston & Silver Body

Description	Order No.
Master Cylinder with14mm Piston & Silver Lever	850-002
Master Cylinder Rebuild Kit with 14mm Piston	850-021
Master Cylinder Reservoir Tank & Hose	850-022
Clutch Lever for Master Cylinder	850-023

Brake, 5/8" Piston & Silver Body

Description	Order No.
Master Cylinder with 5/8" Piston & Silver Lever	850-010
Master Cylinder Rebuild Kit with 5/8" Piston	850-030
Master Cylinder Reservoir Tank & Hose	850-032
Brake Lever for Master Cylinder	850-033

Brake, 14mm Piston & Silver Body

Description	Order No.
Master Cylinder with14mm Piston & Silver Lever	850-011
Master Cylinder Rebuild Kit with 14mm Piston	850-031
Master Cylinder Reservoir Tank & Hose	850-032
Brake Lever for Master Cylinder	850-033

Brake, 1/2" Piston, Silver Body & Short Lever

Description	Order No.
Master Cylinder with 1/2" Piston & Silver Lever	850-012
Master Cylinder Rebuild Kit with 1/2" Piston	———
Master Cylinder Reservoir Tank & Hose	850-032
Brake Lever for Master Cylinder	———

Brake, 1/2" Piston, Black Body & Short Lever

Description	Order No.
Master Cylinder with 1/2" Piston & Black Lever	850-012B
Master Cylinder Rebuild Kit with 1/2" Piston	———
Master Cylinder Reservoir Tank & Hose	850-032
Brake Lever for Master Cylinder	———

Nissin Radial Master Cylinders

The vertically angled body lets the lever flow fluid directly through the master cylinder giving it excellent braking response and powerful stopping performance. Lever is adjustable to six different positions. Fits 7/8" handlebars. ***Made in Japan.***
Note: Use with M10 x P1.25mm banjo bolt.

Brake, 17mm Piston & Black Body

Description	Order No.
Master Cylinder with 17mm Piston & Black Lever	850-016
Master Cylinder Rebuild Kit with 17mm Piston	———
Master Cylinder Reservoir Tank & Hose	850-032
Brake Lever for Master Cylinder	———

Brake, 19mm Piston & Black Body

Description	Order No.
Master Cylinder with 19mm Piston & Silver Lever	850-015
Master Cylinder Rebuild Kit with 19mm Piston	———
Master Cylinder Reservoir Tank & Hose	850-032
Brake Lever for Master Cylinder	———

Brake, 19mm Piston & Black Body

Description	Order No.
Master Cylinder with 19mm Piston & Black Lever	850-015B
Master Cylinder Rebuild Kit with 19mm Piston	———
Master Cylinder Reservoir Tank & Hose	850-032
Brake Lever for Master Cylinder	———

Brake, 19mm Piston & Gold Body

Description	Order No.
Master Cylinder with 19mm Piston & Silver Lever	850-015G
Master Cylinder Rebuild Kit with 19mm Piston	———
Master Cylinder Reservoir Tank & Hose	850-032
Brake Lever for Master Cylinder	———

Mityvac Brake Bleeding Kit

Flushes out brake fluid quickly and cleanly into reservoir container. Kit includes a repairable pump, reservoir container with transfer and storage lids, bleed adapters, plastic tubing and complete instructions.

Order No. 850-060

Motion Pro Lever & Perch Assemblies

Available in black or polished for cable operated clutch and brake applications. Inexpensive replacement for Japanese OEM units. Split-perch design holder. Sold as an assembly - lever, lever holder (perch) and cable adjuster.

Not for use with hydraulic brake or clutches.

Polished

Description	Order No.
Honda Clutch	628-302
Honda Front Brake Cable Type Brake	628-303
Kawasaki/Suzuki/Yamaha Clutch	628-306
Kawasaki/Suzuki/Yamaha Front Brake Cable Type Brake	628-307

Black

Description	Order No.
Honda Clutch	628-300
Honda Front Brake Cable Type Brake	628-301
Kawasaki/Suzuki/Yamaha Clutch	628-304
Kawasaki/Suzuki/Yamaha Front Brake Cable Type Brake	628-305

Quick Adjust MX Clutch Lever

Fits all 7/8" handlebars. Features quality 6061-T6 forged aluminum, Quick-adjuster for on-the-fly adjustments, CR ratio, Includes black rubber mud cover. Sold as an assembly - lever, lever holder (perch) and quick cable adjuster.

Order No. 628-313

Quick Adjust MX Clutch Lever with Hot Start Lever

Fits all 7/8" handlebars. Features quality 6061-T6 forged aluminum, roller bearing in pivot for effortless operation and quick cable adjuster for on-the-fly adjustments. CR ratio. Nylon mounting sleeve rotates on impact to protect lever. Sold as an assembly - lever, lever holder (perch) and quick cable adjuster.

Order No. 628-311

Sudco Banshee Carburetor Cable Kits

Fits stock thumb throttle. Sold as a kit for Yamaha YFZ350 Banshee. Two kits available.

YFZ350 Banshee Carburetor Cable Kit without Idle Screws

Order No. 021-923

Includes 2 caps, 2 cable adjuster screws, 2 locknuts and throttle cable for stock thumb throttle.

YFZ350 Banshee Carburetor Cable Kit with Idle Screws

Order No. 021-924

Includes 2 caps, 2 cable adjuster screws, 4 locknuts, throttle cable for stock thumb throttle and idle screws.

Individual Replacement Parts

Description	Order No.
Cable Adjuster Screw with Locknut	021-273
Idle Adjuster Screw only	002-184
Idle Adjuster Screw Locknut only	002-065
Top Cap only VM34/27 (each)	002-066
Throttle Cable for stock Thumb Throttle	021-278

021-921

021-922

Sudco Blaster/Banshee Carburetor Caps

Sold as kits for Yamaha YFS200 Blaster, and YFZ350 Banshee.

YFZ350 Banshee Kit **Order No. 021-921**

Includes 2 caps, 2 cable adjuster screws and 2 locknuts.

YFZ200 Blaster Kit **Order No. 021-922**

Includes 1 cap, 1 cable adjuster screw and 1 locknut. Individual Replacement Parts

Description	Order No.
Cable Adjuster Screw with Locknut	021-273
Top Cap only VM34/27 (each)	002-066

Motion Pro Honda CRF/XR50 Control Kit

This kit is designed for use with most high rise bar kits. Intended for use with stock carburetor. Includes the following: CR Pro Throttle, Throttle Cable with Carb Cap, Brake Lever with Perch Assembly and Brake Cable.

Order No. 021-953

Throttles

Motion Pro Straight Push-Pull Throttle

Die-cast aluminum housing with black epoxy finish.
This throttle is similar to Yamaha YZ/WR400, FZR, YZF and XT dual-sport bikes.

Order No. 021-280

Motion Pro Turbo Throttle

Polished die-cast aluminum housing. Opens 28-38mm carburetors. Perfect ratio for off-road motorcycles or ATV's. Comes with cable adjuster and dust boot.

Order No. 021-274

Motion Pro CR Pro Throttle

Made from die cast aluminum with a black epoxy finish. Opens 30-34mm carburetors. Throttle cable will clear brake master cylinder on handlebar. Early disk-brake Honda CR replacement. Includes throttle sleeve with grip retaining ring and pop out end.

Order No. 021-966

Motion Pro Vortex Throttle

Made from die cast aluminum with a gray finish and gray rubber mud cover. Similar to most OEM late model Japanese MX/off road bikes.

Description	Order No.
Vortex Throttle. Fits Kaw KX125/250 (92-03), Suz RM125/250 (95-04) & Yam YZ125/250 (96-04)	021-951
Replacement Sleeve for Vortex Throttle.	021-952

Magura 314 Straight Pull Throttle

Reinforced polycarbonate housing with a black finish. Adjustable turn ratio from MX to Enduro in minutes. Includes protective rubber cable boot. Ideal for MX/off road bikes or ATV's.

Order No. 005-225

Motion Pro ATV Twist Throttle Kit

Description	Order No.
Throttle Kit for Yamaha YFZ450 (2004)	021-950
Kit includes Vortex throttle, and cable.	
Throttle Kit for Yamaha YFZ350 Banshee.	021-270
Kit includes Turbo throttle, and 2-into-1 cable.	
Replacement 2-into-1 Throttle Cable.for **021-270**	021-270A

Motion Pro Push/Pull Throttle Assembly

Die-cast aluminum housing with black epoxy finish.Use with Mikuni smooth-bore conversions on street and race bikes. Includes push/pull twist throttle and both cables with adjusters.

Order No. 005-230

Replacement Parts for 005-230 Push/Pull Throttle Assembly

Description	Order No.
Pull Throttle Cable only for Mikuni Smooth Bore	005-230A
Push Throttle Cable only for Mikuni Smooth Bore	005-230B
Push/Pull Twist Throttle only	005-230C
Throttle Tube only	005-230D

Pedal Anchor Kit

Prevents brake pedal from catching on berms, branches, rocks, etc., includes 3 cables, 3 special crimp fittings and 12 in. of 1/8 in. clear PVC

Order No. 950-777

PC Racing Shifter Skins

The PC Racing Shifterskin protects your shoes from ugly shifter marks

- Made from durable, washable neoprene
- Shifterskin provides easier shifting
- Fits most bikes
- Slides on in seconds

Color		Order No.
Black	PCSSBLACK	945-120
Gray	PCSSGREY	945-121

Control Cables

Motion Pro ATV Terminator Clutch Cables

Replacement clutch cables for ATV applications. Sold each.

Honda

Model	Year	M.P. Ref.	Order No.
ATC250R	81-84	02-0208	655-050
ATC250R	85-86	02-0207	655-051
TRX250R Fourtrax 250R	86-89	02-0208	655-050
TRX400EX Fourtrax 400EX	99-00	02-0392	655-055
TRX400EX Sportrax 400EX	01-05	02-0392	655-055

Kawasaki

KSF400A1/A2/A3 KFX400	03-05	04-0229	655-645

Suzuki

LT230SF/SG/SH/SJ Quad	85-88	04-0101	655-420
LT250RF-RN Quadracer	85-92	04-0102	655-422
LT250SK/SL Quadrunner	89-90	04-0101	655-420
LT-Z400K3/K4/K5 Quadracer	03-05	04-0229	655-645
LT500R Quadracer	87-90	04-0108	655-421

Yamaha

YFS200 Blaster	88-05	05-0187	655-211
YFM350X Warrior	87-04	05-0117	655-212
YFZ350 Banshee	87-05	05-0116	655-210
YFZ450R	04-05	05-0312	655-213
YFM660 Raptor	02-05	05-0272	655-214

Brake Light Switch (Hydraulic)

Universal hydraulic brake light switch. Use with high performance master cylinder without integral brake light switch. (10 x 1.25mm PITCH)

Order No. 950-275

Rear Brake Kit for Yamaha Blaster

Fits Yamaha YFS200 Blaster from 1988-2006. Eliminates the stock cable from the handlebar. Cable mounts from the rear brake pedal to the caliper.

Order No. 604-670

Motion Pro Cable Luber

Use to inject lubricant into cable housing. Clamps over cable housing allowing an aerosol can tip to be connected for injection inside. Once the lubricant runs out of far end, the cable is lubricated. Sold each.

Order No. 950-447

PJ1 Cable Lube

Cleans, lubricates and extends cable life.
Makes cable pull easier.
Sold in11 fl.oz aersol can..

Order No. 899-190

Motion Pro ATV & Offroad Throttle Cables

Replacement throttle cables for carburetor and applications listed.
Sold each.

ATV's & Dirtbikes

	Throttle	Carburetor	Notes	Order No.
ATV's & Dirtbikes	M.P. Turbo	Mikuni TM28-34, Keihin PJ34-38, PWK28-39	Single Carb 41	021-277
ATV's & Dirtbikes	M.P. Turbo	Mikuni VM30-38, TM36-38, TMS Keihin PE36-38	Single Carb 40.5	021-276
ATV's & Dirtbikes	Magura Duo	Mikuni VM30-38, TM32-38, TMX, TMS38 Keihin PJ, PWK	Single Carb 50	657-902B

Honda

ATC250R (85-86) TRX250R 86-89	Stock Thumb	Mikuni TM36-38, Keihin PJ36-38, PWK35-39	Single Carb 45° elbow at carb	021-910
ATC250R (81-86) TRX250R (86-89)	M.P. Turbo	Mikuni TM36-38, TMX35-38, VM30-38 Keihin PE35-38	Single Carb 45° elbow at carb	021-911
	M.P. Turbo	Mikuni TM28-34, Keihin PJ34-38, PWK28-39	Single Carb 45° elbow at carb	021-912

Suzuki

LT250R, LT500R	Stock Thumb	Keihin PJ34-38, PWK35-39	Single Carb	021-915
	M.P. Turbo	Keihin PJ34-38, PWK35-39, Mikuni TM28-34	Single Carb 45° elbow at carb	021-912
	M.P. Turbo	Mikuni VM32-38, TM36-38, TMX35-38 TMS38	Single Carb 45° elbow at carb	021-911

Yamaha

YFS200 Blaster	M.P. Turbo	Stock, Mikuni TM28-34,Keihin PJ34,	Single Carb 47.75	021-277
	Stock Thumb	Stock, Mikuni TM28-34,Keihin PJ34, PWK28-35	Single Carb 41	021-279
YFM350X Warrior		Stock, Mikuni VM30-34		021-949
YFZ350 Banshee	M.P. Turbo	Stock, Mikuni TM28-34, Keihin PJ34, PWK28-35	2 into 1	021-275
	Stock Thumb	Stock, Mikuni TM28-34, Keihin PJ34, PWK28-35	2 into 1	021-278
	M.P. Turbo	Mikuni VM30-34	2 into 1	021-270A
	Stock Thumb	Mikuni VM30-34	2 into 1	021-955
YXR660 Rhino	Stock	Keihin FCR	Single	021-963
		Mikuni HSR	Single	021-964

Motion Pro Vintage Street Throttle Cables

Replacement throttle cables for carburetor and applications listed.
Sold each.

Ducati

Model	Throttle	Carburetor	Notes	Order No.
	Stock	Mikuni TM38		021-907
	Stock	Mikuni TM38	Choke Cable for TM38	021-906

Enfield

500	Stock	Mikuni VM34		021-947

HARLEY-DAVIDSON®

	Stock	Mikuni VM36-38, TM36-41		657-900
	Stock	Mikuni VM36-38, TM36-41	90° at carb	657-901

Norton

	Stock	Mikuni VM34 single	MK34/39	007-575
	Stock	Mikuni VM36-38	MK36/39	007-576
	Stock	Mikuni Dual VM32-34	2-into-1	002-025
	M.P. YZF style	Keihin Dual 35H FCR	Push/Pull	021-940

Triumph

TR6/TR7	Stock	Mikuni VM30-34	MK32/43	007-577
T120/T140	Stock	Mikuni VM30-34	MK32/18 (2 cables required, carb to junction box only)	007-578

Yamaha

RD350 (73-75) RZ350 (84-85)	M.P. Turbo	Mikuni TM32-41, VM34-38, Keihin PJ34-38, PWK28-39	2 into 1, some soldering is required	002-025

Brake Pads & Brake Shoes

How to order Vesrah Brakes from Sudco

Brake Pads: All pads have a "610" prefix.

Brake Pad Compounds:
Kevlar/Carbon Pads have a simple 3 digit suffix "610-134".
Sintered Metal Pads have a "JL" after the 3 digit suffix "610-134JL".

Compound Specification:
Kevlar/Carbon - Since the elimination of asbestos in the Vesrah product line, Kevlar has been the standard brake pad material since 1990. Kevlar/Carbon pads are very temperature stable and have a high coefficient of friction for sure footed braking under all conditions, and are stainless steel rotor safe.

Sintered Metal - The sintered Metal "JL" pads from Vesrah feature the latest generation of high performance friction materials. Sintered metal pads are a mixture of copper, tin, graphite and other materials
resulting in a brake pad with very high performance characteristics, especially in wet conditions. Sintered pads are stainless steel rotor compatible.

Brake Shoes: All shoes have a "611" prefix.

Brake Shoe Compounds:
Standard Kevlar / Carbon Shoes have a simple 3 digit suffix "611-150" Grooved shoes have an "NS" after the 3 digit suffix "611-150NS".

Compound Specifications:
Grooved brake shoes offer more consistent performance in wet conditions and higher friction levels for motocross and off-road racing than with standard shoes.

Brake Pads & Brake Shoes

Honda Street

Model	Year	Qt	Kevlar Front	Kevlar Rear	Qt	Sintered Front	Sintered Rear
CHF50 Metropolitan	02-11	1	611-150	611-150	1	611-150NS	611-150NS
MB5-50	1982	1	610-120	611-126	1	—	611-150NS
NA50 Express II	79-81	1	611-134	611-141	1	—	—
NB50 Aero 50	86-87	1	611-134	611-141	1	—	—
NB50M Aero 50	83-85	1	611-134	611-141	1	—	—
NC50 Express	77-80	1	611-134	611-134	1	—	—
NC50 Express	81-83	1	611-134	611-141	1	—	—
NN50MD Gyro	1984	1	611-134	611-134	1	—	—
NQ50 Spree	84-87	1	611-134	611-134	1	—	—
NQ50D Spree Special	1986	1	611-134	611-134	1	—	—
NS50F	1990	1	611-101	611-126	1		611-126NS
NU50 Urban Express	82-83	1	611-150	611-141	1	611-150NS	
NU50M Deluxe	82-83	1	611-150	611-141	1	611-150NS	
NX50M Express SR	81-82	1	611-134	611-141	1	—	—
P50	67-68	1	611-134	—	1	—	—
PA50	78-79	1	611-134	611-134	1	—	—
PA50II Moped	78-83	1	611-134	611-134	1	—	—
SA50 Elite 50 LX	88-93	1	611-134	611-141	1	—	—
SB50 Elite 50 ES	1988	1	611-134	611-134	1	—	—
SB50P Elite 50 E	88-90	1	611-134	611-134	1	—	—
SE50 Elite 50 S	1987	1	611-134	611-141	1	—	—
SE50P Elite 50	1987	1	611-134	611-141	1	—	—
TG50 Gyro S	1986	1	611-134	611-134	1	—	—
TG50M Gyro S	1985	1	611-134	611-134	1	—	—
C70 Passport	80-83	1	611-101	611-101	1	—	—
C70K1 Honda 70	72-73	1	611-101	611-101	1	—	—
CL70/K1-K3 Scrambler	69-73	1	611-101	611-101	1	—	—
CT70	91-94	1	611-101	611-101	1	—	—
CT70 Trail 70	69-71	1	611-101	611-101	1	—	—
CT70 Trail 70	76-82	1	611-101	611-101	1	—	—
CT70H/HK1 Trail 70H	70-73	1	611-101	611-101	1	—	—
CT70K1-K4 Trail 70	72-75	1	611-101	611-101	1	—	—
XL70/K1	74-75	1	611-101	611-101	1	—	—
XL70	76-78	1	611-101	611-101	1	—	—
XL75	77-79	1	611-126	611-126	1	611-126NS	611-126NS
CH80 Elite 80	85-07	1	611-101	611-150	1	—	611-126NS
NH80MD Aero 80	83-84	1	611-101	611-141	1	—	—
NH80 Aero 80	1985	1	611-101	611-141	1	—	—
XL80S	80-85	1	611-126	611-126	1	611-126NS	611-126NS
CT90K1-K4 Trail 90	69-73	1	611-101	611-101	1	—	—
CT90K5/K6 Trail 90	74-75	1	611-101	611-126	1	—	611-126NS
CT90 Trail 90	76-79	1	611-101	611-126	1	—	611-126NS
EZ90 Cub	91-96	1	611-101	611-101	1	—	—
SL90 Motorsport 90	1969	1	611-101	611-101	1	—	—
ST90K0/K1/K2	73-75	1	611-101	611-101	1	—	—
SL100K0/K1/K2	70-73	1	611-101	611-126	1	—	611-126NS
XL100K0/K1	74-75	1	611-126	611-126	1	611-126NS	611-126NS
XL 100	1976	1	611-126	611-126	1	611-126NS	611-126NS
XL 100	77-78	1	611-101	611-126	1	—	611-126NS
XL100S	79-85	1	611-126	611-126	1	611-126NS	611-126NS
CB125S	1973	1	611-101	611-101	1	—	—
CB125S1/S2	74-75	1	610-109	611-126	1	—	611-126NS
CB125S	1976	1	610-109	611-126	1	610-109NR	611-126NS
CB125S	1978	1	610-109	611-126	1	—	611-126NS
CB125S	79-82	1	611-126	611-126	1	611-126NS	611-126NS
CB125S	84-85	1	611-126	611-126	1	611-126NS	611-126NS
CB125TT	1990	1	610-143/2	611-130	1	610-143/2J	—
CH125 Elite 125	1984	1	611-101	611-101	1	—	—
CL125S Scrambler	1973	1	611-101	611-101	1	—	—
CL125S Scrambler	1974	1	610-109	611-126	1		611-126NS
CT125 Trail 125	1977	1	611-126	611-126	1	611-126NS	611-126NS
MT125K0/K1 Elsinore	74-75	1	611-126	611-126	1	611-126NS	611-126NS
MT125 Elsinore	1976	1	611-126	611-126	1	611-126NS	611-126NS
NH125 Aero 125	1984	1	611-101	611-101	1	—	—
NX 125	88-90	1	611-142	611-126	1	—	611-126NS
SL125K0/K1/K2	71-73	1	611-101	611-126	1	—	611-126NS
XL125K0/K1	74-75	1	611-126	611-126	1	611-126NS	611-126NS
XL125	1976	1	611-126	611-126	1	611-126NS	611-126NS
XL125	77-78	1	611-101	611-126	1	—	611-126NS
XL125S	79-82	1	611-126	611-126	1	611-126NS	611-126NS

Honda Street

Model	Year	Qt	Kevlar Front	Kevlar Rear	Qt	Sintered Front	Sintered Rear
XL125S	1984	1	611-126	611-126	1	611-126NS	611-126NS
XL125S	1985	1	—	611-126	1	—	—
CH150 Elite 150	1985	1	611-101	611-101	1	—	—
CH150 Elite 150	1987	1	611-101	611-101	1	—	—
CH150D Deluxe	85-86	1	611-101	611-101	1	—	—
CB175K3-K7	69-73	1	610-110	611-139	1	—	—
CL175K0/K3-K7	68-73	1	610-110	611-139	1	—	—
SL175K0/K1	70-72	1	611-139	611-139	1	—	—
XL175K0/K1/K2	73-75	1	611-125	611-130	1	—	—
XL175	76-78	1	611-125	611-130	1	—	—
CM185T Twinstar	78-79	1	611-125	611-130	1	—	—
XL185S	79-83	1	611-126	611-126	1	611-126NS	611-126NS
CB200K0	1974	1	611-110	611-139	1	—	—
CB200T	75-76	1	610-110	611-139	1	—	—
CL200 Scrambler	1974	1	610-110	611-139	1	—	—
CM200T Twinstar	80-82	1	611-125	611-130	1	—	—
TLR200 Reflex	86-87	1	611-126	611-126	1	611-126NS	611-126NS
TR200 Fatcat	86-87	1	611-126	611-126	1	611-126NS	611-126NS
XL200R Dual Sport	83-84	1	611-126	611-126	1	611-126NS	611-126NS
CB250 Nighthawk	91-07	1	611-125	611-130	1	—	—
CH250 Elite 250	85-86	1	—	—	1	—	—
CH250 Elite 250	87-88	1	—	611-142	1	—	—
CH250 Elite 250	89-90	1	611-142	611-142	1	—	—
CM250C Custom	82-83	1	611-125	611-130	1	—	—
CMX250C Rebel	85-87	1	610-131	611-130	1	—	—
CMX250C Rebel	96-04	1	VD-340/2JL	611-136	1	—	—
CMX250C Rebel	05-12	1	VD-340/2JL	611-136	1	—	—
CMX250CD Rebel	1986	1	610-131	611-130	1	—	—
CN250 Helix	86-87	1	610-123	611-142	1	610-123J	—
CN250 Helix	92-93	1	610-123	611-142	1	610-123J	—
CN250 Helix	94-01	1	610-156/3	611-142	1	—	—
CN250 Helix	04-07	1	610-156/3	—	1	—	—
NSS250 (Scooter)	01-06	1	610-165/2	—	1	610-165/2J	—
NSS250A (Scooter)	01-06	1	610-165/2	—	1	610-165/2J	—
NX250	88-89	1	610-139	611-140	1	610-139J	—
NX250	1990	1	610-161	611-140	1	—	—
VTR250 Interceptor	88-89	1	—	611-139	1	—	—
VTR250 Interceptor	1990	1	610-142	611-139	1	610-142J	—
VTR250	98-11	1	610-156/3	VD-147JL	1	—	—
XL250K0 Motorsport	72-73	1	611-124	611-125	1	—	—
XL250K1/K2	74-75	1	611-124	611-125	1	—	—
XL250	1976	1	611-124	611-125	1	—	—
XR250L Dual Sport	91-96	1	610-161	610-144	1	—	—
CB350F/F1 Super Sport 4-cylinder	72-74	1	610-102	611-127	1	—	—
CB350G Super Sport 2-cylinder	1973	1	610-102	611-127	1	—	—
CB350K0-K4 (2-cyl)	68-73	1	611-119	611-127	1	—	—
CL350K0/K1/-K5	68-73	1	611-119	611-127	1	—	—
SL350K0	1970	1	611-119	611-127	1	—	—
SL350K1/K2	71-72	1	—	611-139	1	—	—
XL350K0/K1	74-75	1	611-124	611-125	1	—	—
XL350	76-78	1	611-124	611-125	1	610-134J	—
XL350R	84-85	1	611-134	611-140	1	—	—
CB360	1974	1	610-102	611-127	1	—	—
CB360G	1974	1	610-102	611-127	1	—	—
CB350T	75-76	1	610-102	611-127	1	—	—
CJ360T	76-77	1	611-119	611-127	1	—	—
CL360K0 Scrambler	1974	1	611-119	611-127	1	—	—
CB400A Automatic	1978	1	610-117	611-132	1	610-156/2J	—
CB400F CB-1	89-90	1	610-156/2	—	1	—	—
CB400F Super Sport	75-77	1	610-102	611-127	1	—	—
CB400T Hawk	80-81	1	610-123/2	611-132	1	—	—
CB400FTI Hawk I	78-79	1	611-119	611-132	1	—	—
CB400FTII Hawk II	78-79	1	610-117	611-132	1	—	—
CM400A Automatic	79-81	1	610-117	611-132	1	—	—
CM400C Custom	1981	1	610-123/2	611-132	1	—	—
CM400E	80-81	1	611-119	611-132	1	—	—
CM400T	79-81	1	610-117	611-132	1	—	—
CB450SC Nighthawk	82-85	1	610-130	611-132	1	—	—

Brake Pads & Brake Shoes

Honda Street

Model	Year	Qt	Kevlar Front	Kevlar Rear	Qt	Sintered Front	Sintered Rear
CB450SC Nighthawk	1986	1	610-123/2	611-132	1	—	—
CB450T Hawk	1982	1	610-130	611-132	1	—	—
CM450A Automatic	82-83	1	610-130	611-132	1	—	—
CM450C Custom	1982	1	610-130	611-132	1	—	—
CM450E	82-83	1	611-119	611-132	1	—	—
CMX450C Rebel	86-87	1	610-123	611-132	1	610-123J	—
CB500K0/K1/K2	71-73	1	610-102	611-128	1	—	—
CB500T	75-76	1	610-102	611-128	1	—	—
CX500	78-79	1	610-112/2	611-133	1	—	—
CX500C Custom	79-80	1	610-112/2	611-133	1	—	—
CX500C Custom	1981	1	610-112	611-133	1	610-112J	—
CX500C Custom	1982	1	610-123	611-133	1	610-123J	—
CX500D Deluxe	79-80	1	610-112/2	611-133	1	—	—
CX500D Deluxe	1981	1	610-112	611-133	1	610-112J	—
CX500TC Turbo	1982	2	610-123	611-123	2	610-123J	610-123J
FT500 Ascot	82-83	1	610-123	611-123	1	610-123J	610-123J
GB500	89-90	1	610-123/3		1	—	—
GL500 Silver Wing	81-82	2	610-123	611-133	2	610-123J	—
GL500I Interstate	81-82	2	610-123/2	611-133	2	—	—
VF500C V30 Magna	84-85	1	610-123	611-133	1	610-123J	—
VF500F Interceptor	84-86	2	611-123/2	610-123	2		610-123J
VT500C Shadow	83-86	1	610-123	610-133	1	610-123J	—
VT500FT Ascot	83-84	1	610-123	611-132	1	610-123J	—
XL500R Dual Sport	1982	1	611-148	611-136	1	—	—
XL500R Dual Sport	83-84	1	610-134	611-136	1	610-134J	—
XL500S Dual Sport	79-80	1	611-125	611-136	1	—	—
XL500R Dual Sport	1981	1	611-138	611-139	1	—	—
CB550F Super Sport	75-77	1	610-102	611-128	1	—	—
CB550/K1	74-75	1	610-102	611-128	1	—	—
CB550K	76-78	1	611-102	611-128	1	—	—
CB550SC Nighthawk	1983	1	610-123	611-132	1	610-123J	—
CB600F (599)	2004	2	610-156	610-163	2	—	—
CB600F (599)	00-06	2	610-156	610-163	2	—	—
CB600F (599)	07-11	2	610-156	VD-174JL	2	—	—
CBR600F Hurricane	87-90	2	610-142	610-123/3	2	—	—
CBR600F2 Hurricane	91-94	2	610-142	610-163	2	—	—
CBR600F3 Hurricane	95-98	2	610-156	610-163	2	—	—
CBR600F4 Hurricane	99-00	2	610-166	610-163	2	—	—
CBR600F4I Hurricane	01-06	2	610-166/2	610-163	2	—	—
CBR600FR Rossi	2002	2	610-166/2	610-163	2	—	—
CBR600RR	03-04	2	610-166/2	610-163	2	—	—
CBR600RR	05-06	2	VD-170	611-163	2	—	—
CBR600RR	07-11	2	VD-170	VD-174	2	SD-170	SD-174
CBR600SE	1998	2	610-156	610-163	2	—	—
CBR600SJR Replica	1996	2	610-156	610-163	2	—	—
FSC600 Silver Wing	02-07	1	610-165/3	610-156	1	—	—
FSC600A Silver Wing	03-11	1	610-165/3	610-156	1	—	—
FSC600D Silver Wing	03-09	1	610-165/3	610-156	1	—	—
VT600C Shadow VLX	88-89	1	610-143/2	611-133	1	610-143/2J	—
VT600C Shadow VLX	88-89	1	610-143/2	611-133N	1	610-143/2J	—
VT600C Shadow VLX	91-93	1	610-143/2	611-133N	1	610-143/2J	—
VT600C Shadow VLX	94-03	1	610-156/3	611-133	1	—	—
VT600C Shadow VLX	04-07	1	610-156/3	611-157	1	—	—
VT600CD VLX Deluxe	1993	1	610-143/2	611-133	1	610-143/2J	—
VT600CD VLX Deluxe	1994	1	610-143/2	610-156/3	1	610-143/2J	—
VT600CD VLX Deluxe	95-03	1	610-156/3	611-133	1	—	—
VT600CD VLX Deluxe	04-07	1	610-156/3	611-157	1	—	—
VT600CD2 VLX Deluxe	99-00	1	610-156/3	611-133	1	—	—
XL600R Dual Sport	83-87	1	610-134	611-136	1	610-134J	—
XL600V Transalp	89-90	1	610-123	611-136	1	—	610-123J
CB650	79-81	1	610-117	611-129	1	—	611-129NS
CB650	1982	1	610-123	611-129	1	610-123J	611-129NS
CB650C Custom	80-81	1	610-117	611-129	1	—	611-129NS
CB650SC Nighthawk	1982	2	610-130	611-129	2	—	611-129NS
CB650SC Nighthawk	83-85	2	610-123/2	611-133	2	—	—
CX650C Custom	1983	1	610-123	611-133	1	610-123J	—
CX650C Turbo	1983	2	610-123/2	610-123	2	—	—
GL650 Silverwing	1983	2	610-123/2	611-133	2	—	—
GL650I Interstate	1983	2	610-123/2	611-133	2	—	—
NT650 Hawk GT	88-91	1	611-156/2		1	610-156/2J	—

Honda Street

Model	Year	Qt	Kevlar Front	Kevlar Rear	Qt	Sintered Front	Sintered Rear
NX650	88-89	1	610-143/2	611-136	1	610-143/2J	—
XR650L Dual Sport	93-12	1	610-161	610-144	1	—	—
CB700SC Nighthawk	84-86	2	610-123	611-146	2	—	—
VF700C Magna	1984	2	610-123	611-133	2	610-123J	—
VF700C Magna	85-86	2	610-123	611-146	2	610-123J	—
VF700C Magna	1987	2	610-123/3	611-146	2	—	—
VF7000F Interceptor	84-85	2	610-123	610-123/3	2	610-123J	—
VF700S Sabre	84-85	2	610-123	611-133	2	610-123J	—
VFR700F/F2	86-87	2	610-143	611-123/3	2	—	—
Interceptor							
VT700C Shadow	84-85	2	610-130	611-133	2	—	—
VT700C Shadow	86-87	2	610-123	611-146	2	610-123J	—
CB750 Nighthawk 750	91-93	2	610-156/3	611-133	1	—	—
CB750 Nighthawk 750	91-93	1	610-156/3	611-133N	1	—	—
CB750A Automatic	76-78	1	610-102	611-129	1	—	611-129NS
CB750C Custom	80-81	2	610-117	611-129	2	—	611-129NS
CB750C Custom	1982	2	610-123/2	611-129	2	—	611-129NS
CB750F Super Sport	75-76	1	610-102	610-108	1	—	—
CB750F Super Sport	77-79	2	610-112	610-112	2	610-112J	610-112J
CB750F Super Sport	1980	2	610-112/2	610-112/2	2	—	—
CB750F Super Sport	81-82	2	610-123/2	610-123	2	—	610-123J
CB750K0/K1-K5	69-75	1	610-101	611-129	1	—	611-129NS
CB750K	1976	1	610-129	611-129	1	—	611-129NS
CB750K	77-78	1	610-102	611-129	1	—	611-129NS
CB750K	79-81	1	610-117	611-129	1	—	611-129NS
CB750K	1982	1	610-123	611-129	1	610-123J	611-129NS
CB750L LTD	1979	1	610-117	611-129	1	—	611-129NS
CB750SC Nighthawk	82-83	2	610-123/2	611-129	2	—	611-129NS
RVF750R (RC45)	1994	2	610-154		2	—	—
VF750C V45 Magna	82-83	2	610-123	611-133	2	610-123J	—
VF750C V45 Magna	1988	1	610-123	611-146	1	610-123J	—
VF750C Magna	94-03	1	610-156/2	611-146	1	610-156/2J	—
VF750C2 Deluxe	97-03	1	610-165/2	611-146	1	610-165/2J	—
VF750CD Magna	95-03	1	610-156/2	611-146	1	610-165/2J	—
VF750F Interceptor	83-84	2	610-123	611-123/3	1	610-139J	—
VF750S Sabre	82-83	2	610-123	611-133	2	610-123J	—
VF750S Sabre	82-83	2	610-123	611-133N	2	610-123J	—
VFR750F Interceptor	1986	2	610-123/3	610-123/3	2	—	—
VFR750F	90-97	2	610-156	610-156/2	2	—	610-156/2J
VFR750R (RC30)	1990	2	610-154		1	610-154J	—
VT750C Shadow	1983	2	610-130	611-133	2	—	—
VT750C Shadow A.C.E	98-02	1	610-156/2	611-146	1	610-156/2J	—
VT750C Shadow Aero	04-07	1	610-156/2	611-146	1	610-156/2J	—
VT750 Shadow Aero	08-11	1	610-156/2	611-146	1	610-156/2J	—
VT750C2F Shadow Spirit	10-11	1	610-156/2	611-146	1	610-156/2J	—
VT750CA Shadow Aero	04-10	1	610-156/2	611-146	1	610-156/2J	—
VT750CD Deluxe	98-02	1	610-156/2	611-146	1	610-156/2J	—
VT750CD2 Deluxe	98-02	1	610-156/2	611-146	1	610-156/2J	—
VT750CDA Shadow	02-03	1	610-156/2	611-146	1	610-156/2J	—
VT750CDB Shadow	02-03	1	610-156/2	611-146	1	610-156/2J	—
VT750CDC Shadow	02-03	1	610-156/2	611-146	1	610-156/2J	—
VT750CDD Shadow	02-03	1	610-156/2	611-146	1	610-156/2J	—
VT750DC	01-09	1	610-156/2	611-146	1	610-156/2J	—
Shadow Spirit 750							
VT750DCA	01-07	1	610-156/2	611-146	1	610-156/2J	—
Shadow Spirit							
VT750DCB	01-07	1	610-156/2	611-146	1	610-156/2J	—
Shadow Spirit 750							
PC800 Pacific Coast	89-90	2	610-156	611-146	2	—	—
PC800 Pacific Coast	94-98	2	610-156	611-146	2	—	—
VFR800 Interceptor	02-05	2	610-165/2	610-165/2	2	610-165/2J	610-1652J
VFR800 Interceptor	06-11	2		610-165/2	2	—	610-165/2J
VFR800A Interceptor	02-05	2	610-165/2	610-165/2	2	610-165/2J	610-165/2J
VFR800A Interceptor	06-11	2	VD-172	610-165/2	2	—	—
VFR800Fi Interceptor	98-01	2	610-165/2	610-165/2	2	610-165/2J	610-1652J
VT800C Shadow	1988	2	610-123	611-146	2	610-123J	—
CB900C Custom	1980	2	610-112	610-117	2	—	—
CB900C Custom	1981	2	610-112/2	610-117	2	—	—
CB900C Custom	1982	2	610-123/2	610-123	2	—	610-123J
CB900F Super Sport	81-82	1	610-123/2	610-123	2	—	610-123J

Honda Street

Model	Year	Qt	Kevlar Front	Kevlar Rear	Qt	Sintered Front	Sintered Rear
CB900F Hornet	02-07	2	610-154	610-163	2	610-154J	—
CBR900RR	93-95	2	610-154	610-163	2	610-154J	—
CBR900RR	96-97	2	610-154/2	610-163	2	—	—
CBR900RR	98-99	2	610-166	610-163	2	—	—
CBR929RE	2001	2	610-166/2	610-163	2	—	—
CBR929RR	00-01	2	610-166/2	610-163	2	—	—
CBR954RR	02-03	2	610-166/2	610-163	2	—	—
CB1000	94-95	2	610-154	610-163	2	610-154J	—
CB100C Custom	1983	1	610-112/2	610-123	1	—	610-123J
CBR1000F Hurricane	87-88	2	610-143	610-123/3	2	—	—
CBR1000F Hurricane	90-91	2	610-156/2	610-153-2	2	610-156/2J	610-156/2J
CBR1000F Hurricane	93-96	2	610-164	610-164	2	—	—
CBR1000RR	04-05	2		610-163	2	—	—
CBR1000RR	06-11	2	VD-170JL	VD-174JL	2	—	—
GL1000 Goldwing	75-77	2	610-112/2	610-108	2	—	—
GL1000 Goldwing	78-79	2	610-112	610-108	2	610-112J	—
GL1000L Goldwing LTD	1976	2	610-112/2	610-108	2	—	—
RVT1000R (RC51)	00-06	2	610-123	611-163	2	—	—
VF100F Interceptor	1984	2	610-123	610-123/3	2	610-123J	—
VF1000R	85-86	2	610-123	610-140	2	610-123J	—
VTR1000F Super Hawk	98-05	2	610-154/2	610-163	2	—	—
CBX Super Sport	1979	2	610-112	610-112	2	610-112J	610-112J
CBX Super Sport	1980	2	610-112	611-112/2	2	610-112J	—
CBX Super Sport	81-82	2	610-123/2	610-123	2	—	610-123J
CB1100F Super Sport	1983	2	610-123/2	610-123	2	—	610-123J
CB1000 Hornet	1999	2	610-165	610-165		—	—
CBR1100XX Blackbird	97-00	2	610-165/2	610-165/2	2	610-165/2J	610-165/2J
CBR1100XX Blackbird	01-03	2	610-165/2	610-165/2	2	—	610-165/2J
GL1100 Goldwing	80-81	2	610-112	611-112/2	2	610-112J	—
GL1100 Goldwing	82-83	2	610-123/2	610-123	2	—	610-123J
GL1100A Aspencade	82-83	2	610-123/2	610-123	2	—	610-123J
GL1100I Interstate	80-81	2	610-112	610-112/2	2	610-112J	—
GL1100I Interstate	82-83	2	610-123/2	610-123	2	—	610-123J
ST1100	91-02	2	610-156	610-156/3	2	—	—
ST1100A ABS	92-95	2	610-156	610-156/3	2	—	—
ST1100A ABS	96-02	2	610-165/2	610-156/3	2	—	—
VF1100C V65 Magna	83-86	2	610-165/2	610-165	2	610-165/2J	—
VF1100S V65 Sabre	84-85	2	610-123	610-123/3	2	610-123J	—
VT1100C Shadow	85-86	1	610-123	610-123/3	1	610-123J	—
VT1100C Shadow	87-90	1	610-123	611-146	1	610-123J	—
VT1100C Shadow	92-93	1	610-123/3	611-146	1	610-123J	—
VT1100C Shadow	94-96	1	610-123/3	611-146	1	610-123J	—
VT1100C Spirit	97-07	1	610-156/2	611-146	1	610-156/2J	—
VT1100C2 Shadow A.C.E.	95-01	1	610-156/2	610-163	1	610-156/2J	—
VT1100C2 Shadow Sabre	00-07	1	610-156/2	610-163	1	610-156/2J	—
VT1100C2-2 Shadow 1100	1997	1	610-156/2	610-163	1	610-156/2J	—
VT1100C3 Shadow Aero	98-02	1	610-156/2	610-163	1	610-156/2J	—
VT1100D2 Shadow A.C.E.	1999	1	610-156/2	610-163	1	610-156/2J	—
VT1100T Shadow Tourer	98-01	1	610-156/2	610-163	1	610-156/2J	—
GL1200 Goldwing	1984	2	610-123/3	610-123/3	2	—	—
GL1200A Aspencade	84-87	2	610-123/3	610-123/3	2	—	—
GL1200I Interstate	84-87	2	610-123/3	610-123/3	2	—	—
GL1200L Goldwing LTD	1985	2	610-123/3	610-123/3	2	—	—
GL1200SEi Goldwing	1986	2	610-123/3	610-123/3	2	—	—
ST1300	02-07	2	610-165/2	610-165	1	—	—
ST1300A ABS	03-07	2	610-165/2	610-165	1	—	—
ST1300A ABS	08-11	2	VD-172JL	610-165			
VTX1300C	04-10	1	610-156/2	610-163	1	610-156/2J	—
VTX1300R	05-09	1	610-156/2	610-163	1	610-156/2J	—
VTX1300S	03-07	1	610-156/2	610-163	1	610-156/2J	—
GL1500 Goldwing	88-90	2	610-143/2	610-123/4	2	610-143/2J	610-123/4J
GL1500A Aspencade	91-00	2	610-143/2	610-123/4	2	610-143/2J	610-123/4J
GL1500C Valkyrie	97-00	2	610-156	610-156/3	2	—	—
GL1500C Valkyrie	2003	2	610-156	610-156/3	2	—	—

Honda Street

Model	Year	Qt	Kevlar Front	Kevlar Rear	Qt	Sintered Front	Sintered Rear
GL1500CD Valkyride	01-03	2	610-156	610-156/3	2	—	—
GL1500CF Valkyride Interstate	99-01	2	610-156	610-156/3		—	—
GL1500 CT Valkyrie Tourer	97-00	2	610-156	610-156/3	2	—	—
GL1500I Interstate	91-96	2	610-143/2	610/123/4	2	610-143/2J	610-123/4J
GL1500SE Goldwing	90-00	2	610-143/2	610/123/4	2	610-143/2J	610-123/4J
GL1800 Goldwing	01-12	2	610-165/2		2	—	—
GL1800A Goldwing	01-11	2	610-165/2	610-165/2	2	—	—
GL1800A Goldwing AB	01-11	2	610-165/2		2	—	—
NRX1800DA/DB Rune	2004	2	610-165/2	610-165/2	2	610-165/2J	—
NRX1800EA/EB Rune	2004	2	610-165/2	610-165/2	2	610-165/2J	—
VTX1800C	02-04	2	610-165/2	610-165	2	—	—
VTX1800C1/C2/C3	03-08	2	610-165/2	610-165	2	—	—
VTX1800	05-11	2	610-165/2	610-165	2	—	—
VTX1800N	04-11	2	610-165/2	610-165	2	—	—
VTX1800R Retro	02-08	2	610-165/2	610-165	2	610-165/2J	—
VTX1800R1/R2/R3	04-08	2	610-165/2	610-165	2	—	—
VTX1800S Retro	02-08	2	610-165/2	610-165	2	—	—
VTX1800S1/S2/S3	02-08	2	610-165/2	610-165	2	—	—
VTX1800T	07-11	2	610-165/2	610-165		—	—

Honda ATV

Model	Year	Qt	Kevlar Front	Kevlar Rear	Qt	Sintered Front	Sintered Rear
ATC70	78-85	1	—	611-130	1	—	—
TRX70 Fourtrax 70	86-87	1	—	—	1	—	—
ATC90K1/K2/K3	70-75	1	—	611-135	1	—	611-135NS
ATC90	76-78	1	—	611-135	1	—	611-135NS
TRX90 Fourtrax 90	93-01	2	611-101	611-135	2	—	611-135NS
TRX90 Sportrax 90	02-06	2	611-101	611-135	2	—	611-135NS
TRX90EX	07-08	2	611-101	611-135			
TRX90X	09-12	2	611-101	611-135			
ATC110	79-85	1	—	611-135	1	—	611-135NS
ATC125M	84-87	1	611-101	611-135	1	—	611-135NS
TRX125 Fourtrax	85-88	2	611-101	611-135	2	—	611-135NS
ATC185	1980	1	611-101	611-135	1	—	611-135NS
ATC185S	81-83	1	611-101	611-135	1	—	611-135NS
ATC200	81-83	1	611-101	611-135	1	—	611-135NS
ATC100E Big Red	82-83	1	611-101	611-135	1	—	611-135NS
ATC200ES Big Red	1984	1	611-101	611-135	1	—	611-135NS
ATC200M	84-85	1	611-101	611-135	1	—	611-135NS
ATC200S	84-85	1	611-101	611-135	1	—	611-135NS
ATC200X	83-87	1	610-127	610-127/2	1	610-127J	610-127/2J
TRX200 Fourtrax 200	1984	2	611-147	611-135	2	—	611-135NS
TRX200 Fourtrax 200	90-91	2	611-152	611-135	2	—	611-135NS
TRX200D Type II	91-97	2	611-152	611-135	2	—	611-135NS
TRX200SX Fourtrax	86-88	2	611-152	611-135	2	—	611-135NS
ATC250ES Big Red	85-87	1	611-135	611-127	1	611-135NS	—
ATC250R	1981	1	610-120	611-135	1	—	611-135NS
ATC250R	82-84	1	610-127	610-127/2	1	610-127J	610-127/2J
ATC250R	85-86	1	610-134	610-134	1	610-134J	610-134J
ATC250SX	85-87	1	611-135	611-127	1	611-135NS	—
FL250 Odyssey	77-84	2	610-109	611-135	1	610-109NR	611-135NS
TRX250 Fourtrax	85-87	2	611-147	611-135	2	—	611-135NS
TRX250 Recon	97-01	2	611-152	—	2	—	—
TRX250EX Sportrax	01-08	2	610-127	—	2	610-127J	—
TRX250R Fourtrax	86-89	2	610-139	610-134	2	610-139J	610-134J
TRX250TE Fourtrax Recon ES	02-12	2	611-152	—	2	—	—
TRX250TE Recon	2006	2	611-152	—	2	—	—
TRX250TM Fourtrax Recon	02-12	2	611-152	—	2	—	—
TRX250TM Recon ES	02-12	2	611-152	—	2	—	—
TRX250X Fourtrax	87-88	2	610-127	610-127/3	2	610-127J	610-127/3J
TRX250X Fourtrax	91-92	2	610-127	610-127/3	2	610-127J	610-127/3J
TRX300 Fourtrax	88-00	2	611-152	611-127	2	—	—
TRX300EX Fourtrax	93-09	2	610-127	610-127	2	610-127J	610-127J
TRX300FW Fourtrax 300 4x4	1988	2	611-156	611-127	2	—	—
TRX300FW Fourtrax 300 4x4	90-00	2	611-156	611-127	2	—	—

Brake Pads & Brake Shoes

Honda ATV

Model	Year	Qt	Kevlar Front	Kevlar Rear	Qt	Sintered Front	Sintered Rear
ATC350X	1985	1	610-134	610-127/2	1	610-134J	610-127/2J
ATC350X	1986	1	610-139	610-127/2	1	610-139J	610-127/2J
FL350R Odyssey	85-87	2	611-147	610-138	1	—	—
TRX350 Fourtrax 4x4	86-87	2	611-153	611-146	2	—	—
TRX350D Fourtrax	87-89	2	611-153	611-146	2	—	—
Foreman 4x4							
TRX350FE	00-06	2	611-156	611-157	2	—	—
Rancher 4x4 ES							
TRX350FM	00-06	2	611-156	611-157	2	—	—
Rancher 4x4							
TRX350TE	00-06	2	611-156	611-157	2	—	—
Rancher ES							
TRX350TM	00-06	2	611-156	611-157	2	—	—
Fourtrax Rancher							
FL400R Pilot	89-90	2	611-147	610-138/2	2	—	—
TRX400EX	99-00	2	610-127	610-127	2	610-127J	610-127J
Fourtrax 400EX							
TRX400EX	01-08	2	610-127	610-127/2	1	610-127J	610-127/2J
Sportrax 400EX							
TRX400FA	04-07	2	611-156	611-157	2	—	—
Fourtrax Rancher AT							
TRX400FGA	04-07	2	611-156	611-157	2	—	—
Fourtrax Rancher AT							
TRX400FGA	2006	2	611-156	611-157	2	—	—
Fourtrax Rancher AT GPS							
TRX400FM	2002	2	611-156	611-157	2	—	—
Fourtrax Foreman							
TRX400FW	95-01	2	611-156	611-157	2	—	—
Fourtrax Foreman							
TRX400FW	2003	2	611-156	611-157	2	—	—
Fourtrax Foreman							
TRX400X	09-12	2	610-139	610-134	2	610-139J	610-134J
TRX450ER	06-12	2	610-161	—	2	—	—
TRX450ES	98-03	2	611-156	611-157	2	—	—
Fourtrax Foreman ES							
TRX450FE	02-04	2	611-156	611-157	2	—	—
Fourtrax Foreman ES							
TRX450FM	02-04	2	611-156	611-157	2	—	—
Fourtrax Foreman S							
TRX450R Sportrax	04-09	2	610-161	—	2	—	—
TRX450S	98-03	2	611-156	611-157	2	—	—
Fourtrax Foreman							
TRX500FA	04-04	2	611-156	611-146	2	—	—
Fourtrax Rubicon							
TRX500FA Rubicon	05-12	2	—	611-146	2	—	—
TRX500FE	05-11	2	—	611-146	2	—	—
Fourtrax Foreman 4x4 ES							
TRX500FGA	2004	2	611-156	611-146	2	—	—
Foreman Rubicon							
TRX500FGA	2005	2	—	611-146	2	—	—
Foreman Rubicon							
TRX500FGA	06-08	2	—	611-146	2	—	—
Foreman Rubicon GPS							
TRX500FM	05-11	2	—	611-146	2	—	—
Fourtrax Foreman 4x4							
TRX500TM	05-06	2	—	611-146	2	—	—
Fourtrax Foreman							
TRX650FA Rincon	2003	2	611-156	—	2	—	—
TRX650FA	04-05	2	611-156	—	2	—	—
Fourtrax Rincon Gpscape							
TRX650FGA	04-05	2	611-156	—	2	—	—

Honda Dual Sport & Offroad

Model	Year	Qt	Kevlar Front	Kevlar Rear	Qt	Sintered Front	Sintered Rear
CRF50F	04-12	1	611-134	611-134	1	—	—
QA50K1/K2/K3	73-75	1	611-101	611-101	1	—	—
XR50R	00-03	1	611-134	611-134	1	—	—
ZB50	1988	1	611-101	611-101	1	—	—
Z50AK0/K1-AK6	68-75	1	611-101	611-101	1	—	—
Z50A	76-78	1	611-101	611-101	1	—	—

Honda Dual Sport & Offroad

Model	Year	Qt	Kevlar Front	Kevlar Rear	Qt	Sintered Front	Sintered Rear
Z50R	1979	1	611-101	611-101	1	—	—
Z50R	80-89	1	611-134	611-134	1	—	—
Z50R	91-99	1	611-134	611-134	1	—	—
Z50RD Special	1986	1	611-134	611-134	1	—	—
CR60R	83-84	1	611-150	611-150	1	611-150NS	611-150NS
CRF70F	04-12	1	611-150	611-150	1	611-150NS	611-150NS
CT70 Trail 70	76-79	1	611-101	611-101	1	—	—
CT70 Trail 70	80-82	1	611-101	611-101	1	—	—
CT70	91-94	1	611-101	611-101	1	—	—
CT70HK0/HK1	70-73	1	611-101	611-101	1	—	—
CT70K0 Trail 70	69-71	1	611-101	611-101	1	—	—
CT70K1-K4 Trail 70	72-75	1	611-101	611-101	1	—	—
SL70K0/K1	71-73	1	611-101	611-101	1	—	—
XL70K0/K1	74-75	1	611-126	611-126	1	611-126NS	611-126NS
XL70	1976	1	611-126	611-126	1	611-126NS	611-126NS
XR70R	97-03	1	611-126	611-126	1	611-126NS	611-126NS
XL75	77-79	1	611-126	611-126	1	611-126NS	611-126NS
XR75K0/K1/K2	73-75	1	611-101	611-101	1	—	—
XR75	76-78	1	611-101	611-101	1	—	—
CR80R	80-81	1	611-126	611-126	1	611-126NS	611-126NS
CR80R	1982	1	611-126	611-150	1	611-126NS	611-150NS
CR80R	83-85	1	611-150	611-150	1	611-150NS	611-150NS
CR80R	86-91	1	611-120	611-150	1	—	611-150NS
CR80R	92-00	1	610-120	610-144	1	—	—
CR80R	01-02	1	610-127	610-144	1	610-127J	—
CR80RB Expert	96-00	1	610-120	610-144	1	—	—
CR80RB Expert	01-02	1	610-127	610-144	1	610-127J	—
CRF80F	04-12	1	611-150	611-150	1	611-150NS	611-150NS
XL80S	80-85	1	611-126	611-126	1	611-126NS	611-126NS
XR80	79-84	1	611-126	611-126	1	611-126NS	611-126NS
XR80R	85-03	1	611-150	611-150	1	611-150NS	611-150NS
CR85R	03-07	1	610-127	610-144	1	610-127J	—
CR85RB Expert	03-07	1	610-127	610-144	1	610-127J	—
CT90K1-K4 Trail 90	69-73	1	611-101	611-101	1	—	—
CT90K5/K6 Trail 90	74-75	1	611-101	611-126	1	—	611-126NS
CT90 Trail 90	76-79	1	611-101	611-126	1	—	611-126NS
EZ90 Cub	91-96	1	611-101	611-101	1	—	—
SL90 Motorsport 90	1969	1	611-101	611-101	1	—	—
ST90K0/K1/K2	73-75	1	611-101	611-101	1	—	—
CRF100F	04-12	1	611-150	611-150	1	611-150NS	611-150NS
SL100K0/K1/K2	70-73	1	611-101	611-126	1	—	611-126NS
XL100K0/K1	74-75	1	611-126	611-126	1	611-126NS	611-126NS
XL100	1976	1	611-126	611-126	1	611-126NS	611-126NS
XL100	77-78	1	611-101	611-126	1	—	611-126NS
XL100S	79-85	1	611-126	611-126	1	611-126NS	611-126NS
XR100	81-84	1	611-126	611-126	1	611-126NS	611-126NS
XR100R Pro-Link	85-03	1	611-150	611-150	1	611-150NS	611-150NS
CT110 Trail 110	80-86	1	611-101	611-126	1	—	611-126NS
CR125M Elsinore	76-78	1	611-126	611-126	1	611-126NS	611-126NS
CR125R	1982	1	—	—	1	—	—
CR125R	1983	1	611-143	611-143	1	611-143NS	611-143NS
CR125R	84-85	1	611-134	611-143	1	611-14J	611-143NS
CR125R	1986	1	610-134	611-142	1	610-134J	—
CR125R	87-94	1	610-139	610-144	1	610-139J	—
CR125R	95-01	1	610-161	610-144	1	—	—
CR125R	02-07	1	610-161	—		—	—
CT125 Trail 125	1977	1	611-126	611-126	1	611-126NS	611-126NS
MT125K0/K1 Elsinore	74-75	1	611-126	611-126	1	611-126NS	611-126NS
MT125 Elsinore	1976	1	611-126	611-126	1	611-126NS	611-126NS
SL125K0/K1/K2	71-73	1	611-101	611-126	1	—	611-126NS
NX125	88-90	1	611-142	611-126	1	—	611-126NS
TL125 Trials	73-75	1	611-126	611-126	1	611-126NS	611-126NS
TL125S Trials	1976	1	611-126	611-126	1	611-126NS	611-126NS
XL125K0/K1	74-75	1	611-126	611-126	1	611-126NS	611-126NS
XL125	1976	1	611-126	611-126	1	611-126NS	611-126NS
XL125	77-78	1	611-126	611-126	1	—	611-126NS
XL125S	79-82	1	611-126	611-126	1	611-126NS	611-126NS
XL125S	1984	1	611-126	611-126	1	611-126NS	611-126NS
XL125S	1985	1	—	611-126	1	—	611-126NS
CRF150F	03-05	1	610-161	—		—	—

Brake Pads & Brake Shoes

Honda Dual Sport & Offroad

Model	Year	Qt	Kevlar Front	Kevlar Rear	Qt	Sintered Front	Sintered Rear
MR175	75-77	1	611-126	611-126	1	611-126NS	611-126NS
SL175K0/K1	70-72	1	611-139	611-139	1	—	—
XL175K0/K1/K2	73-75	1	611-125	611-130	1	—	—
XL175	76-78	1	611-125	611-130	1	—	—
XL185	79-83	1	611-126	611-126	1	611-126NS	611-126NS
XR185	1979	1	611-126	611-126	1	611-126NS	611-126NS
TLR200 Reflex	86-87	1	611-126	611-126	1	611-126NS	611-126NS
TR200 Fatcat	86-87	1	611-126	611-126	1	611-126NS	611-126NS
XL200R Dual Sport	83-84	1	611-126	611-126	1	611-126NS	611-126NS
XR200	80-84	1	611-126	611-126	1	611-126NS	611-126NS
XR200R Pro-Link	81-83	1	611-126	611-126	1	611-126NS	611-126NS
XR200R	84-02	1	611-126	611-126	1	611-126NS	611-126NS
CRF230F	03-09	1	610-161	—	1	—	—
CR250R	84-85	1	610-134	611-143	1	611-134J	611-143NS
CR250R	1986	1	610-134	611-142	1	611-134J	611-142NS
CR250R	87-94	1	610-139	610-144	1	610-139J	610-144J
CR250R	95-01	1	610-161	610-144	1	—	610-144J
CR250R	02-07	1	610-161	—		—	—
CRF250R	04-12	1	610-161	—	1	—	—
CRF250X	04-12	1	610-161	—	1	—	—
NX250	88-89	1	610-139	611-140	1	610-139J	611-140NS
NX250	1990	1	611-126	611-150	1	—	611-140NS
XL250K0	72-73	1	611-124	611-125	1	—	—
XL250K1/K2	74-75	1	611-124	611-125	1	—	—
XL250	1976	1	611-124	611-125	1	—	—
XL250	79-80	1	611-125	611-140	1	—	611-140NS
XR250	91-96	1	610-161	610-144	1	—	610-144J
XR250L Dual Sport	81-82	1	611-149	611-140	1	611-149NS	611-140NS
XR250R	84-87	1	610-134	611-126	1	610-134J	611-126NS
XR250R	88-91	1	610-139	611-126	1	610-139J	611-126NS
XR250R	92-95	1	610-139	610-144	1	610-139J	—
XR250R	96-04	1	610-161	610-144	1	—	—
XR250R	1970	1	611-119	611-127	1	—	—
SL350K0	71-72	1	—	611-139	1	—	—
SL350K1/K2	74-75	1	611-124	611-125	1	—	—
XL350K0/K1	76-78	1	611-124	611-125	1	—	—
XL350	84-85	1	610-134	611-140	1	—	611-140NS
XL350R	1983	1	611-143	611-126	1	611-143NS	611-126NS
XR350R	84-85	1	610-134	611-126	1	—	611-126NS
XR400R	96-04	1	610-161	610-144	1	—	—
CR450R	1981	1	611-149	611-159	1	611-149NS	—
CRF450R	02-12	1	610-161	—	1	610-161JL	—
CRF450X	05-12	1	610-161	—	1	—	—
CR480R	1982	1	611-149	611-159	1	611-149NS	—
CR480R	1983	1	611-144	611-142	1	—	—
CR500R	84-85	1	610-134	611-143	1	—	611-143NS
CR500R	1986	1	610-134	611-142	1	—	—
CR500R	87-94	1	610-139	610-144	1	—	—
CR500R	95-01	1	610-161	610-144	1	—	—
XL500R	1982	1	611-148	611-136	1	—	—
XL500R	83-84	1	610-134	611-136	1	610-134J	—
XL500S	79-80	1	611-125	611-136	1	—	—
XL500S	1981	1	611-138	611-139	1	—	—
XR500	79-80	1	611-137	611-136	1	—	—
XR500R	81-82	1	611-149	611-136	1	611-149NS	—
XR500R	83-84	1	610-134	611-126	1	610-134J	611-126NS
XL600R	83-87	1	610-134	611-136	1	610-134J	—
XL600V Transalp	89-90	1	610-123	611-136	1	610-123J	—
XR600R	85-87	1	610-134	611-126	1	610-134J	611-126NS
XR600R	88-90	1	610-139	611-126	1	610-139J	611-126NS
XR600R	91-92	1	610-139	611-144/2	1	610-139J	—
XR600R	1993	1	610-161	610-144	1	—	—
XR600R	94-00	1	610-139	610-144	1	—	—
NX650	88-89	1	610-143/2	611-136	1	610-143/2J	—
XR650L Dual Sport	93-12	1	610-161	610-144	1	—	—
XR650R	00-07	1	610-161	610-144	1	—	—

Kawasaki Street

Model	Year	Qt	Kevlar Front	Kevlar Rear	Qt	Sintered Front	Sintered Rear
AR50A1	1982	1	610-342	611-312	1	—	—
AR50A1	1982	1	610-342	611-312	1	—	—
G3SS/A/B/C/D/E-90	69-75	1	611-312	611-312	1	—	—
G3TR-90 Brushmaster	69-70	1	611-312	611-312	1	—	—
MC1/MC1A/MC1B-90	73-75	1	611-312	611-312	1	—	—
G3TRA-100	1971	1	611-312	611-312	1	—	—
G4TR/A-100 Trail Boss	70-71	1	611-312	611-312	1	—	—
G4TRB/C/D/E-100	72-75	1	611-312	611-312	1	—	—
G5/G5Z/G5B/G5C-100	72-75	1	611-312	611-312	1	—	—
KD100M1-M4	76-79	1	611-312	611-312	1	—	—
KE100A5-A10	76-81	1	611-312	611-312	1	—	—
KE100B1-B20	82-80	1	611-312	611-312	1	—	—
KH100B7/B8	76-77	1	611-312	611-312	1	—	—
KM100A1-A7	76-81	1	611-312	611-312	1	—	—
KV100A7	1976	1	611-312	611-312	1	—	—
C2SS-120 Roadrunner	67-69	1	611-312	611-312	1	—	—
C2TR-120 Roadrunner	67-69	1	611-312	611-312	1	—	—
BN125A1/A9F	98-09	1	—	611-409	1	—	—
F6/A/B-125 Enduro	71-73	1	611-302	611-302	1	—	—
KE125A3-A10	76-83	1	611-409	611-409	1	—	—
KS125/A	74-75	1	611-408	611-409	1	—	—
F3-175	68-70	1	—	611-309	1	—	—
F7A/B-175 Enduro	71-73	1	611-302	611-302	1	—	—
F7C/D-175 Enduro	74-75	1	611-409	611-409	1	—	—
KE175B1/B2/B3	76-78	1	611-408	611-411	1	—	611-411NS
KE175D2-D5	80-83	1	611-408	611-416	1	—	—
KZ200A1/A2	78-79	1	610-309	611-409	1	—	—
EL250B2/B3 Eliminator	88-89	1	610-426	611-413	1	610-426J	—
EL250E1 Eliminator	1991	1	610-426	610-413	1	610-426J	—
EX250E Ninja 250R	86-87	1	610-426	610-426	1	610-426J	610-426J
EX250F Ninja 250R	88-90	1	610-427	610-430	1	610-427J	610-430J
EX250F5-F19 Ninja 250R	92-05	1	610-427	610-430	1	610-427J	610-430J
EX250D6F-D7F Ninja 250R	06-07	1	610-427	610-430	1	610-427J	610-430J
EX250J8F-JCF Ninja 250R	08-12	1	VD-250JL	VD-250JL	1	SD-250	SD-250
F8-250 Enduro	71-72	1	611-309	610-309	1	—	—
F11/A/B-250	73-75	1	611-309	610-309	1	—	—
KE250B1/B2/B3	77-79	1	611-411	610-309	1	—	—
KH250A5	1976	1	—	611-404	1	—	—
KL250A1/A1A/A2	78-79	1	611-411	611-309	1	—	—
KKL250A3/A4/A5	80-82	1	611-408	611-416	1	—	—
KL250C1/C2	83-84	1	611-408	611-416	1	—	—
KL250D2-D22 KLR	85-05	1	610-425	611-416	1	610-425J	—
KL250G4/G5/G6/G7	00-03	1	—	610-425	1	—	—
Super Sharpa							
KZ250D1 LTD	1980	1	611-309	611-409	1	—	—
K1250D2 CSR	1981	1	611-309	611-409	1	—	—
KZ250L1 CSR	1982	1	611-309	611-409	1	—	—
KZ250W1 LTD	1983	1	611-309	611-404	1	—	—
S1A/S1B/S1C-250	73-75	1	—	611-413	1	610-426J	—
EX305B1 GPz	1983	1	610-426	611-413	1	610-420/2J	—
KZ305A1/A2 CSR	81-82	1	610-420/2	611-413	1	610-420/2J	—
KZ305B1 LTD	1982	1	610-420/2	611-413	1	610-420/2J	—
KZ305B2/B3 LTD	87-88	1	610-420/2	611-413	1	—	—
S2/S2A-350	72-73	1	—	611-404	1	—	—
KH400A3/A4/A5	76-78	1	610-414	611-404	1	—	—
KLX400A1 Dual Sport	2003	1	610-161	610-144	1	—	—
KZ400A1/A2 Deluxe	77-78	1	—	611-404	1	—	—
KZ400B1/B2	78-79	1	611-413	611-413	1	—	—
KZ400C1	1978	1	—	611-413	1	—	—
KZ400/D/D3/D4	74-77	1	—	611-404	1	—	—
KZ400H1 LTD	1979	1	610-414	611-413	1	—	—
KZ400S/S2/S3I	75-77	1	—	611-404	1	—	—
S3/S3A-400	74-75	1	—	611-404	1	—	—
KZ440A1/A2/A3 LTD	80-82	1	610-414	611-404	1	—	—
KZ440A4 LTD	1983	1	610-420/2	611-413	1	610-420/2J	—
KZ440B1/B2	80-81	1	—	611-413	1	—	—
KZ440D1-D4 LTD	80-82	1	610-414	611-413	1	—	—
KZ440D5 LTD	1983	1	610-420/2	611-413	1	610-420/2J	—
KZ440G1	1983	1	610-420/2	611-413	1	610-420/2J	—
EN450A1-A6 454 LTD	85-90	1	610-426	611-412	1	610-426J	—

Brake Pads & Brake Shoes

Kawasaki Street

Model	Year	Qt	Kevlar Front	Kevlar Rear	Qt	Sintered Front	Sintered Rear
EN500A1-A7 Vulcan	90-96	1	610-426	611-412	1	610-426J	—
EN500C1-C10 Vulcan	96-05	1	610-426	611-412	1	610-426J	—
EN500C6F/C7F	06-09	1	610-426	611-412	1	610-426J	—
EX500A1-A7	87-93	1	610-427	611-412	1	610-427J	—
EX500D1-D3 Ninja 500	94-96	1	610-427	610-425	1	610-427J	610-625J
EX500D4-D12	97-05	1	610-427	610-425	1	610-427J	610-425J
500REX500D6F/D7F	06-09	1	610-427	610-425	1	610-427J	610-425J
H1D/E/F-500	73-75	1	610-414	—	1	—	—
H1 500	69-71	1	610-420	611-420	1	—	—
KH500A8	1976	1	610-414	—	1	—	—
KZ550A1	1980	1	610-414	611-412	1	—	—
KZ550A2/A3/A4	81-83	1	610-420/2	611-412	1	610-420/2J	—
KZ550C1-C4 LTD	80-83	1	610-422/2	611-412	1	610-420/2J	—
KZ550D1 GPz	1981	2	610-420	610-420/2	2	610-420J	610-420/2J
KZ550F1 Spectre	1983	1	610-420/2	611-412	1	610-420/2J	—
KZ550F2 LTD	1984	1	610-420/2	611-412	1	610-120/2J	—
KZ550H1/H2 GPz	82-83	2	610-426	610-426	2	610-426J	610-426J
KZ550M1 LTD	1983	1	610-420/2	611-412	1	610-420/2J	—
ZR550B1/B2/B3 Zephyr	90-92	2	610-427	610-430	2	610-427J	610-430J
ZR550B4 Zephyr	1993	2	610-427	610-434	2	—	—
ZX550A1/A2/A3 GPz	84-86	2	610-426	610-426	2	610-426J	610-426J
KL600A1 KLR600	1984	1	610-425	611-409	1	610-425J	—
KL600/B1/B2 KLR600	85-86	2	610-425	611-409	1	610-425J	—
ZL600A1/A2 Eliminator	86-87	1	610-426	611-412	1	—	—
ZL600B1/B2 Eliminator	96-97	1	610-426	610-426	2	610-426J	610-426J
ZX600A1/A2/A3 Ninja	85-87	2	610-426	610-426	2	610-426J	610-426J
ZX600B1 Ninja 600RX	1987	2	610-427	610-427	2	610-427J	610-427J
ZX600C1-C10 Ninja	88-97	2	610-427	610-427	2	610-427J	610-427J
ZX600D1-D4 Ninja ZX6	90-93	2	610-344/2	610-427	2	—	—
ZX60E1-E10 ZX-6	93-02	2	610-344	610-434	2	610-344J	—
ZX600E11 ZZR600	2003	2	610-344	610-434	2	610-344J	—
ZX600E12 ZZR600	2004	2	610-434	610-434	2	—	—
ZX600F1/F2/F3 ZX-6R	95-97	2	610-344	610-434	2	610-344J	—
ZX600G1/G2 Ninja ZX-6R	98-99	2	610-349	610-434	2	610-349J	—
ZX600J1/J2/J3	00-02	2	610-349	610-434	2	610-349J	—
Ninja ZX-6R							
ZX600J4/J6F/J7F	05-07	2	610-349	610-434	2	610-349J	—
ZZR600							
ZX600K1 ZX-6RR	2003	2	—	610-434	2	—	—
ZX600M1 ZX-6RR	2004	2	—	610-434	2	—	—
ZX600N1/N6F	05-06	2	—	610-434	2	—	—
ZX-6RR							
ZX600	07-12	2	VD-44JL	VD-434VL	2	—	—
ZX636B1/B2 ZX-6R	03-04	2	—	610-434	2	—	—
ZX636C1/C6F	05-06	2	—	610-434	2	—	—
Ninja ZX-6R						—	—
EJ650A2/A3 W650	00-01	1		611-413	1	—	—
EX650 Ninja 650R	06-09	1	610-352 -L-	610-434	1	—	—
		1	—R-	—	1	—	—
KL650A1-A19 KLR	87-05	1	610-428	610-425	1	610-428J	610-425J
KL650A6F/A7F KLR	06-07	1	610-428	610-425	1	610-428J	610-425J
KL650 KLR	08-12	1	VD-340JL	VD-250JL	1	—	—
KL650B2/B3 Tengai	90-91	1	610-427	610-425	1	610-427J	610-425J
KLX650C1-C4 Dual	93-96	1	610-161	610-432	1	—	—
KZ650B1/B2/B2A/B3	77-79	1	610-414	611-412	1	—	—
KZ650C1-C3 Custom	77-79	2	610-414	610-412	2	—	—
KZ650D1/D1A/D2 SR	78-79	2	610-414	610-306	2	—	610-306J
KZ650E1 LTD	1980	1	610-414	611-412	1	—	—
KZ650F1	1980	1	610-414	611-412	1	—	—
KZ650H1/H2/H3 CSR	81-83	1	610-420-2	611-412	1	—	—
KZ700A1	1984	2	610-420	610-420/2	2	610-420J	610-420/2J
VN700A1 Vulcan	1985	2	610-426	611-412	2	610-426J	—
ZN700A1/A2 LTD	84-85	2	610-426	610-426	2	610-426J	610-426J
H2/A/B/C-750	72-75	1	610-301	611-405	1	—	—
KZ750B1/B2/B3/B4	76-79	1	610-414	610-412	1	—	—
KZ750E1/E2/E3	80-82	2	610-420	610-420/2	2	610-420J	610-420/2J
KZ750F1 LTD	1983	2	610-420	610-420/2	2	610-420J	610-420/2J
KZ750G1 LTD (2 cyl.)	1980	1	610-414	611-412	1	—	—
KZ750H1-H4 LTD	80-83	2	610-420	610-420/2	2	610-420J	610-420/2J
KZ750K1/K2 LTD	83-84		—	611-412	1	—	—

Kawasaki Street

Model	Year	Qt	Kevlar Front	Kevlar Rear	Qt	Sintered Front	Sintered Rear
KZ750L3	1983	2	610-420	610-420/2	2	610-420J	610-420/2J
KZ750M1 CSR (2 cyl.)	1982	1	610-420/2	611-412	1	610-420/2J	—
KZ750N1/N2 Spectre	82-83	2	610-420	610-420/2	2	610-420J	610-420/2J
KZ750R1GPz	1982	2	610-420	610-420/2	2	610-420J	610-420/2J
VN750A2-A21 Vulcan	86-05	2	610-426	611-412	1	610-426J	—
VN750A6F Vulcan	2006	2	610-426	610-412	1	610-426J	—
ZR750C1-C3 Zephyr	91-93	2	610-427	610-427	1	610-427J	610-427J
ZR750F2 ZR-7	2000	1	610-352-L-	—	1	—	—
		1	—R-	—	1	—	—
ZR750H1-H3 ZR-7S	04-06	1	610-352-L-	—	1	—	—
		1	—R-	—	1	—	—
ZX750A1-A3 GPz	83-85	2	610-426	610-426	2	610-426J	610-426J
ZX750E1/E2 GPz	84-85	2	610-426	610-426	2	610-426J	610-426J
ZX750F1-F4 Ninja R	87-90	2	610-427	610-427	2	610-427J	610-427J
ZX750H Ninja ZX-7	89-90	2	610-344/3	610-327/2	2	610-344/3J	610-327/2J
ZX750J Ninja ZX-7	91-92	2	610-344/3	610-327/2	2	610-344/3J	610-327/2J
ZX750K Ninja ZX-7R	91-92	2	610-344/3	610-327/2	2	610-344/3J	610-327/2J
ZX750 Ninja ZX-7	93-95	2	610-344	610-327/2	2	610-344J	610-327/2J
ZX750M Ninja ZX7-R	93-94	2	610-344	610-327/2	2	610-344J	610-327/2J
ZX750N ZX7-RR	96-97	2	610-437	—	2	—	—
ZX750P1-P8 ZX7-R	96-03	2	610-349	610-327/2	2	610-349J	610-327/2J
VN800A1-A11 Vulcan	95-05	1	610-426	611-412	1	610-426J	—
VN800B1-B10 Classic	96-05	1	610-352	611-412	1	—	—
VN800C Vulcan Drifter	99-00	1	610-352	—	1	—	—
VN800E Vulcan Drifter	01-06	1	610-352	—	1	—	—
Z1/A/B-900	73-75	1	610-301	611-405	1	—	—
KZ900A4/A5	76-77	2	610-414	611-405	1	—	—
KZ900B1 LTD	1976	2	610-414	610-412	2	—	—
ZL900A1/A2 Eliminator	86-87	2	610-426	610-426	2	610-426J	610-426J
ZX900A1-A3 Ninja	84-86	2	610-426	610-426	2	610-426J	610-426J
ZX900B Ninja ZX-9R	94-96	2	610-344	610-434	2	610-344J	—
ZX900B4 Ninja ZX-9R	1997	2	610-349	610-434	2	610-349J	—
ZX900C Ninja ZX-9R	98-99	2	610-349	610-434	2	610-349J	—
ZX900E Ninja ZX-9R	00-01	2	610-349	610-434	2	610-349J	—
ZX900F Ninja ZX-9R	02-03	2	610-443	610-434	2	—	—
KZ1000A1/A2/A2A	77-78	1	610-414	610-412	1	—	—
KZ1000A3/A3A/A4 MKII	79-80	2	610-414	610-306/2	2	—	—
KZ1000B1/B2 LTD	77-78	2	610-424	610-412	2	—	—
KZ1000B3/B4 LTD	79-80	2	610-414	610-603/2	2	—	—
KZ1000C1/C1A	1978	2	610-414	610-306	2	—	610-306J
KZ1000C2-4 Police	79-81	2	610-414	610-306/2	2	—	—
KZ1000D1 Z1R	1978	2	610-414	610-306/2	2	—	—
KZ1000D3 Z1R	1980	2	610-414	610-306/2	2	—	—
KZ1000E Shaft ST	79-80	2	610-414	610-306/2	2	—	—
KZ1000G1 LTD Classic	1980	2	610-414	610-306/2	2	—	—
KZ1000J1/J2/J3	81-83	2	610-420	610-420/2	2	610-420J	610-420/2J
KZ1000K1/K2 LTD	81-82	2	610-420	610-420/2	2	610-420J	610-420/2J
KZ1000M1/M2 CSR	81-82	2	610-420	610-420/2	2	610-420J	610-420/2J
KZ1000PZ-P20 Police	82-01	2	610-420	610-420/2	2	610-420J	610-420/2J
KZ1000P21/P22 Police	02-03	1	610-352-L-	—	1	—	610-435/2J
		1	— -R-	—	1	—	—
KZ1000P24 Police	2005	1	610-352-L-	—	1	—	610-435/2J
		1	— -R-	—	1	—	—
KZ1000R1/R2 Replica	82-83	2	610-420	610-420/2	2	610-420J	610-420/2J
ZG1000A1-A8 Concours	86-93	2	610-426	610-426	2	610-426J	610-426J
ZG1000A9-A20	94-05	2	610-427	610-426	2	610-427J	610-426J
ZG1000A6F Concours	2006	2	610-427	610-426	2	610-427J	610-426J
ZL1000A1 Eliminator	1987	2	610-426	610-426	2	610-426J	610-426J
ZR1000A Z1000	03-06	2	610-443	610-434	2	—	—
ZX1000A1/A2 Ninja	86-87	2	610-426	610-426	2	610-426J	610-426J
ZX1000A1/A2 Ninja ZX-10	88-90	2	610-427	610-427	2	610-427J	610-427J
ZX1000C1/C2 ZX-10R	04-05	2	—	610-434	2	—	—
ZX1000D6F ZX-10R	06-07	2	—	610-434		—	—
ZX1000 JBF-JCF	11-12	2	VD-355JL	VD-174JL			
KZ1100A1/A2/A3 Shaft	81-83	2	610-420	610-420/2	2	610-420J	610-420/2J
KZ1100B1/B2 GPz	81-82	2	610-420	610-420/2	2	610-420J	610-420/2J
KZ1100D1/D2 Spectre	82-83	2	610-420	610-420/2	2	610-420J	610-420/2J
KZ1100L1 LTD	1983	2	610-420	610/420/2	2	610-420J	610-420/2J
ZN1100B1/B2 LTD	84-85	2	610-426	610-426	2	610-426J	610-426J
ZR1100A1/A2/A3/A4	92-95	2	610-344	610-427	2	610-344J	610-427J

Kawasaki Street

Model	Year	Qt	Kevlar Front	Kevlar Rear	Qt	Sintered Front	Sintered Rear
ZR1100C3/C4	99-00	2	610-349	610-327/2	2	610-349J	610-327/2J
ZRX1100							
ZX1100A1/A2 GPz	83-84	2	610-426	610-426	2	610-26J	610-426J
ZX1100C1 Ninja ZX-11	1990	2	610-344/3	610-427	2	610-344/3	610-427J
ZX1100C2-C4 ZX-11	91-93	2	610-344	610-327/2	2	610-344J	610-327/2J
ZX1100D1-D9 ZX-11	93-01	2	610-344	610-327/2	2	610-344J	610-327/2J
ZX1100E1/E2/E3 GPz	95-97	1	610-352 L	610-434	1	—	—
		1	— R	—	1	—	—
ZX1100F1 GPz ABS	1996	1	610-352 L	610-434	1	—	—
		1	— R	—	1	—	—
ZG1200A Voyager XII	1986	2	610-426	610-426	2	610-26J	610-426J
ZG1200B Voyager XII	87-03	2	610-426	610-426	2	610-26J	610-426J
ZR1200A ZRX1200	01-05	2	610-349	610-327/2	2	610-349J	610-327/2J
ZX1200A ZX-12R	00-01	2	610-349	610-327/2	2	610-349J	610-327/2J
ZX1200B ZX-12R	02-03	2	610-349	610-327/2	2	610-349J	610-327/2J
ZX1200B ZX-12R	04-05	2	—	610-327/2	2	610-344J	610-327/2J
ZX1200C ZZR1200	02-05	2	610-344	610-327/2	2	610-344J	610-327/2J
KZ1300A1/A2/A3/A4	79-82	2	610-423	610-306/2	2	—	—
KZ1300B2 Tourer	1980	2	610-426	610-306/2	2	610-426J	—
KZ1300A1-A6 Voyager	83-88	2	610-426	610-426	2	610-26J	610-426J
ZX1400A6F-A7F ZX-14	06-07	2	—	—	2	—	—
ZX1400C8F CAF	08-10	2	—	—	2	—	—
VN1500A Vulcan 88	87-95	1	610-426	610-426	1	610-26J	610-426J
VN1500A Vulcan 1500	96-99	1	610-426	610-426	1	610-26J	610-426J
VN1500B Vulcan 88 SE	87-90	1	610-426	610-426	1	610-26J	610-426J
VN1500C Vulcan 1500L	96-97	1	610-426	610-426	1	610-26J	610-426J
VN1500D Classic	96-97	1	610-352	610-426	1	—	610-426J
VN1500E Classic	98-00	1	610-426	610-426	1	—	610-426J
VN1500E Classic	01-04	1	610-352	—	1	—	—
VN1500G Nomad	99-00	1	610-352	610-426	1	—	610-426J
		1	— R	—	1	—	—
VN1500G Nomad	2001	1	610-352	—	1	—	610-435/2J
		1	— R	—	1	—	—
VN1500J Drifter	99-00	1	610-352	—	1	—	—
VN1500L Nomad F.I.	2000	1	610-352 L	—	1	—	—
		1	— R	—	1	—	—
VN1500L Nomad F.I.	01-04	1	610-352 L	—	1	—	610-435/2J
		1	— R	—		—	—
VN1500N Classic F.I.	2000	1	610-352	—	1	—	—
VN1500N Classic F.I.	01-04	1	610-352	—	1	—	610-435/2J
VN1500N Classic	04-08	1	610-352	—	1	—	610-435/2J
VN1500P Mean Streak	02-03	2	610-349	—	2	610-349J	—
VN1500R Drifter	01-05	1	610-352	—	1	—	—
VN1500T6F Classic	2006	1	610-352	—	1	—	—
VN1600A Classic	03-08	1	610-352 L	—	1	—	—
		1	— R	—		—	—
VN1600B Mean Streak	2004	2	610-349	—	2	610-349J	—
VN1600B Mean Streak	05-08	2	—	—	2	610-435/2J	—
VN1600D Nomad	05-08	1	610-352 L	—	1	—	—
		1	— R	—	1	—	—
VN1600E6F Classic	2006	1	610-352 L	—	1	—	—
		1	— R	—	1	—	—
VN1600F Mean Streak	2006	2	—	—	2	—	610-435/2J
VN2000A Vulcan 2000	04-07	2	610-344	610-344J	2	610-344J	610-435/2J
VN2000D1/D6F Limited	05-10	2	610-344	—	2	610-344J	610-435/2J

Kawasaki ATV

Model	Year	Qt	Kevlar Front	Kevlar Rear	Qt	Sintered Front	Sintered Rear
KSF50A1-A6F KFX50	03-06	2	611-323	611-310	2	—	—
KSF50A1-A6F KFX80	03-06	2	611-323	611-314	2	—	—
KLF110A1/A2 Mojave	87-88	2	611-312	611-409	2	—	—
KLF110B1/B2 Mojave	87-88	2	611-312	611-409	2	—	—
KLT110A1/A2/A	84-86	1	611-312	611-409	1	—	—
KLT160A1	1985	1	611-312	611-409	1	—	—
KLF185A1 Bayou	1985	1	—	611-413	1	—	—
KLF185A2-A4 Bayou	86-88	2	611-411	611-413	2	611-411NS	—
KLT185A1/A2	86-87	1	611-312	611-409	1	—	—
KLT200A1-A4	81-83	1	611-312	611-411	1	—	611-411NS
KLT200B1	1983	1	611-312	611-411	1	—	611-411NS
KLT200C1/C2	83-84	1	611-312	611-411	1	—	611-411NS

Kawasaki ATV

Model	Year	Qt	Kevlar Front	Kevlar Rear	Qt	Sintered Front	Sintered Rear
KLF220A1-A15 Bayou	88-02	2	611-411	611-413	2	611-411NS	—
KLF250A1-A6F Bayou	03-06	2	611-411	611-413	2	611-411NS	—
KLT250A1/A2	82-83	1	611-312	611-411	1	—	611-411NS
KLT50C Prairie	83-85	1	611-312	611-411	1	—	611-411NS
KLT250P1 Police	1984	1	611-312	611-411	1	—	611-411NS
KSF250A1-A18 Mojave	87-03	2	610-425	610-127/2	2	610-425J	610-127/2J
KXF250A1/A2 Tecate 4	87-88	2	610-425	610-127/2	2	610-425J	610-127/2J
KXT250A1 Tecate 3	1984	1	611-411	610-342	1	611-411NS	—
KXT250A2 Tecate 3	1985	1	610-425	610-425	1	610-425J	610-425J
KXT250B1 Tecate 3	1986	1	610-425	610-425	1	610-425J	610-425J
KXT250B2 Tecate 3	1987	1	610-425	610-127/2	1	610-425J	610-127/2J
KEF300A Lakota 300	95-00	2	610-425	610-127/2	2	610-425J	610-127/2J
KEF300B Lakota Sport	01-03	2	610-426	610-426	2	610-426J	610-426J
KLF300A1/A2 Bayou	86-87	2	611-418	611-413	2	—	—
KLF300B1-B17 Bayou	88-04	2	610-425	611-413	2	610-425J	—
KLF300C Bayou 4x4	89-04	1	610-250 L	611-419	1	—	—
		1	610-340 R	—	1	—	—
KVF300A Prairie 4x4	99-02	2	610-120	611-419	2	—	—
KVF300B Prairie 300	99-02	2	610-120	611-419	2	—	—
KVF360A Prairie 4x4	03-12	2	610-120	—	2	—	—
KVF360B Prairie 300	03-12	2	610-120	—	2	—	—
KVF360C Prairie 360	2003	2	610-120	—	2	—	—
4x4 Advantage Classic							
KVF360C Prairie 360	04-10	2	610-120	—	2	—	—
4x4 Hardwoods Green							
KLF400B Bayou 4x4	93-99	1	610-250 L	611-419	1	—	—
		1	610-340 R	—	1	—	—
KSF400A KFX400	03-06	2	610-127/2	610-340	2	610-12/2J	—
KVF400A Prairie 4x4	97-87	2	610-120	611-419	2	—	—
KVF400B1 Prairie 400	1998	2	610-120	611-419	2	—	—
KVF400C Prairie 4x4	99-02	2	610-120	611-419	2	—	—
KVF400D Prairie 400	99-02	2	610-120	611-419	2	—	—
KVF650A/B Prairie 650	02-03	1	—	—	1	—	—
		1	—	—	1	—	—
KVF650D1/D6F/D7F	05-12	1	—	—	1	—	—
Brute Force 650 4x4		1	—	—	1	—	—
KVF650E1/E6F/E7F	05-09	1	—	—	1	—	—
Brute Force 650 4x4		1	—	—	1	—	—
Hardwoods Green HD							
KVF650F6F/H7F	06-12	1	610-250 L	—	1	—	—
Brute Force 650 4x4i		1	610-340 R	—	1	—	—
KVF650G6F/G7F	06-09	1	610-250 L	—	1	—	—
Brute Force 650 4x4i	Realtree	1	610-340 R	—	1	—	—
Hardwoods Green HD							
KSV700A1/A2/A6F/A7F	04-09	1	—	—	1	—	—
KFX700 V-Force		1	—	—	1	—	—
KSV700B1/B2/B6F/B7F	04-09	1	—	—	1	—	—
KFX700 V-Force		1	—	—	1	—	—
KSV700C6F	2006	1	—	—	1	—	—
KFX700 V-Force		1	—	—	1	—	—
KVF700A1/A2/A6F	04-06	1	—	—	1	—	—
KVF700B1/B2	04-05	1	—	—	1	—	—
Prairie 700 4x4		1	—	—	1	—	—
KVF700D1/D6F	05-06	1	—	—	1	—	—
Prairie Special Edition		1	—	—	1	—	—
KVF750A1/A6F	05-12	1	610-250 L	—	1	—	—
Brute Force 750 4x4i		1	610-340 R	—	1	—	—
KVF750B6F/C6F	06-12	1	610-250 L	—	1	—	—
Brute Force 750 4x4i		1	610-340 R	—	1	—	—

Brake Pads & Brake Shoes

Kawasaki Dual Sport & Offroad

Model	Year	Qt	Kevlar Front	Kevlar Rear	Qt	Sintered Front	Sintered Rear
KX60A1/A2	83-84	1	611-417	611-417	1	—	—
KX60B1-B19	85-03	1	611-417	611-417	1	—	—
KX65A1/-ACF	00-12	1	—	610-120	1	—	—
KD80A1/A2	75-76	1	611-312	611-312	1	—	—
KD80M1-M8	80-87	1	611-312	611-312	1	—	—
KD80N1/N2/N3	88-90	1	610-342	611-312	1	—	—
KDX80A1/A2	80-81	1	611-414	611-414	1	—	—
KDX80B1/B2	82-83	1	611-414	611-414	1	—	—
KDX80C1/C2/C3/C4/C5	84-88	1	611-415	611-415	1	—	—
KX80A1/A2	79-80	1	611-414	611-414	1	—	—
KX80C1/C2	81-82	1	611-414	611-417	1	—	—
KX80E1	1983	1	611-415	611-417	1	—	—
KX80E2/E3	84-85	1	610-342	611-417	1	—	—
KX80G1/G2	86-87	1	611-342	611-417	1	—	—
KX80J2	1987	1	611-342	611-417	1	—	—
KX80L1/L2/L3	88-90	1	610-342	610-127	1	—	610-127J
KX80N1/N2/N3	89-90	1	610-342	610-127	1	—	610-127J
KX80R1-R6	91-96	1	610-342	610-127	1	—	610-127J
KX80R7	1997	1	610-438	610-127	1	—	610-127J
KX80T1/T2/T3/T4	91-94	1	610-342	610-127	1	—	610-127J
KX80W1/W2/W3	98-00	1	610-438	610-127	1	—	610-127J
KX85A1-ACF	01-12	1	610-438	610-127	1	—	610-127J
MC1/MC1A/MC1B-90	73-75	1	611-312	611-312	1	—	—
G3TR-90 Bushmaster	69-70	1	611-312	611-312	1	—	—
MC1/MC1A/MC1B-90	73-75	1	611-312	611-312	1	—	—
G3TRA-100 Bushmaster	1971	1	611-312	611-312	1	—	—
G4TR/A-100 Trail Boss	70-71	1	611-312	611-312	1	—	—
G4TRB/C/D/E-100	72-75	1	611-312	611-312	1	—	—
G5/G5A/G5B/G5C-100	72-75	1	611-312	611-312	1	—	—
KD100M1-M4	76-79	1	611-312	611-312	1	—	—
KE100A5-A10	76-81	1	611-312	611-312	1	—	—
KE100B1-B20	82-80	1	611-312	611-312	1	—	—
KM100A1-A7	76-81	1	611-312	611-312	1	—	—
KV100A7	1976	1	611-312	611-312	1	—	—
KX100B5/B6	95-96	1	610-342	610-127	1	—	610-127J
KX100B7	1997	1	610-342	610-127	1	—	610-127J
KX100C1/C2/C3	98-00	1	610-342	610-127	1	—	610-127J
KLX100	10-11	1	610-340	610-120	1	—	—
KX100D1-DCF	01-12	1	610-342	610-127	1	—	610-127J
KLX110A1-DCF	02-12	1	611-417	—	1	—	—
C2SS-120 Roadrunner	67-69	1	611-312	611-312	1	—	—
C2TR-120 Roadrunner	67-69	1	611-312	611-312	1	—	—
KD125/A2/A3/A4/A5	75-79	1	611-408	611-409	1	—	—
KE125A3-A10	76-83	1	611-408	611-409	1	—	—
KLX125A1/A2/A3/A6F	03-06	1	611-310	611-310	1	—	—
KLX125B1/B2/B3/B6F	03-06	1	610-351	611-310	1	—	—
KS125/A	74-75	1	611-408	611-409	1	—	—
KX125/A/A3	74-76	1	611-408	611-409	1	—	—
KX125A4/A5/A6/A7	78-81	1	611-408	611-409	1	—	—
KX125B1	1982	1	610-342	611-409	1	—	—
KX125B2/C1/D1	83-85	1	610-425	—	1	610-425J	—
KX125E1/E2/F1	86-88	1	610-425	610-425	1	610-425J	610-425J
KX125G1/H1/H2/J1/J2	89-93	1	610-340	610-432	1	—	—
KX125K1	1994	1	610-161	610-432	1	—	—
KX125K2/K3	95-96	1	610-161	610-144	1	—	—
KX125K4/K5	97-98	1	610-139	610-144	1	610-139J	—
KX125L1/L2	99-00	1	610-139	610-144	1	610-139J	—
KX125L3/L4	01-02	1	610-161	610-144	1	—	—
KX125M1/M2/M3	03-05	1	610-161	610-144	1	—	—
KD175A1/A2/A3/A4	76-79	1	611-408	611-409	1	—	—
KDX175A1/A2/A3	80-82	1	611-408	611-409	1	—	—
KE175B1/B2/B3	76-78	1	611-408	611-411	1	—	611-411NS
KE175D2-D5	80-83	1	611-408	611-416	1	—	—
KDX200A1/A2/A3	83-85	1	611-416	—	1	—	—
KDX200C1/C2/C3	86-88	1	610-425	—	1	610-425J	—
KDX200E1/E2/E3/E4	89-92	1	610-425	610-432	1	610-425J	—
KDX200E5/E6	93-94	1	610-425	610-340	1	610-425J	—
KDX200H1-H11	95-05	1	610-161	610-432	1	—	—
KDX200H6F	2006	1	610-161	610-432	1	—	—

Kawasaki Dual Sport & Offroad

Model	Year	Qt	Kevlar Front	Kevlar Rear	Qt	Sintered Front	Sintered Rear
KDX220A4-A12	97-05	1	610-161	610-432	1	—	—
KDX250A1/B1/B2	80-82	1	611-411	611-309	1	611-411NS	—
KDX250B3/B4	83-84	1	611-411	611-409	1	611-411NS	—
KDX250D1/D2/D3/D4	91-94	1	610-340	610-432	1	—	—
KE250B1/B2/B3	77-79	1	611-411	611-309	1	611-411NS	—
KL250A1/A1A/A2	78-79	1	611-411	611-309	1	611-411NS	—
KL250A3/A4/A5	80-82	1	611-408	611-416	1	—	—
KL250C1/C2	83-84	1	611-408	611-416	1	—	—
KL250D2-D22 KLR250	85-05	1	610-425	610-416	1	610-425J	—
KL250G Super Sherpa	00-03	1	—	610-425	1	—	610-425J
KL250A1/A2	79-80	1	611-408	611-409	1	—	—
KLX250D2/D3/D4	94-96	1	611-408	611-409	1	—	—
KT250 Trials	75-76	1	611-411	611-309	1	611-411NS	—
KX250	1974	1	611-411	611-309	1	611-411NS	—
KX250A/A3	75-76	1	611-411	611-309	1	611-411NS	—
KX250A4/A5	78-79	1	610-342	611-409	1	—	—
KX250A6/A7	80-81	1	610-425	611-409	1	610-425J	—
KX250B1	1982	1	610-342	611-409	1	—	—
KX250C1/C2/D1	83-85	1	610-425	611-409	1	610-425J	—
KX250D2	1986	1	610-425	610-425	1	610-425J	610-425J
KX250E1/F1	87-88	1	610-428	610-425	1	610-428J	610-425J
KX250G1-J2	89-93	1	610-340	610-432	1	—	—
KX250K1	1994	1	610-161	610-432	1	—	—
KX250K2/K3	95-96	1	610-161	610-144	1	—	—
KX250K4/K5/L1/L2	97-00	1	610-139	610-144	1	610-139	—
KX250L3/L4/M1/M2	01-04	1	610-161	610-144	1	—	—
KX250R1/RCF	05-08	1	610-161	610-144	1	—	—
KX250N1/N2 KX250F	04-05	1	610-161	—	1	—	—
KX250T6F-YCF	06-12	1	610-161	—	1	—	—
KLX300A2-A10	97-05	1	610-161	610-144	1	—	—
KLX300A6F/A7F	06-07	1	610-161	610-144	1	—	—
KDX400A1/A2	79-80	1	611-411	611-309	1	611-411NS	—
KLX400A1 Dual Sport	2003	1	610-161	610-144	1	—	—
KLX400B1 KLX400R	2003	1	610-161	610-144	1	—	—
KX400/A2	75-76	1	611-411	611-309	1	611-411NS	—
KDX420B1	1981	1	611-411	611-309	1	611-411NS	—
KX420A1/A2	80-81	1	611-411	611-309	1	611-411NS	—
KDX450A1	1982	1	611-411	611-309	1	611-411NS	—
KX450D6F-EBF	06-12	1	610-161	—	1	—	—
KX500A1/A2/B1	83-85	1	610-425	611-409	1	610-425J	—
KX500B2	1986	1	610-425	610-425	1	610-425J	610-425J
KX500C1/D1	87-88	1	610-425	610-425	1	610-425J	610-425J
KX500E1-E5	89-93	1	610-340	610-432	1	—	—
KX500E6/E7	94-95	1	610-161	610-432	1	—	—
KX500E8-E16	96-04	1	610-161	610-144	1	—	—
KL600A1 KLR600	1984	1	610-425	611-409	1	610-425J	—
KL600/B1/B2 KLR600	85-86	1	610-425	611-409	1	610-425J	—
KL650A1-A19 KLR650	87-05	1	610-428	610-425	1	610-428J	610-425J
KL650A6F/A7F KLR650	06-07	1	610-428	610-425	1	610-428J	610-425J
KL650 E8F-ECF KLR	08-12	1	610-340	610-250	1	610-340J	—
KL650B Tengal KLR650	90-91	1	610-427	610-425	1	610-427J	610-425J
KLX650A KLX650R	93-95	1	610-161	610-432	1	—	—
KLX650C Dual Sport	93-96	1	610-161	610-432	1	—	—
KLX650D1 KLX650R	1996	1	610-161	610-144	1	—	—

Suzuki Street

FA50T-M Shuttle	80-91	1	611-323	611-323	1	—	—
FS50T/X	80-81	1	611-323	611-323	1	—	—
FZ50N/T/X/Z/D Shuttle	79-83	1	611-322	611-322	1	—	—
OR50N	1979	1	611-312	611-312	1	—	—
OR50T	1980	1	611-310	611-310	1	—	—
RB50H (GSXR50)	1987	1	610-342	611-312	1	—	—
TS75M/A/B Colt	75-77	1	611-312	611-312	1	—	—
RV90J/K/L/M/A/B Rover	72-77	1	611-312	611-312	1	—	—
A100A/B Gopher	76-77	1	611-302	611-312	1	—	—
SP100D	1983	1	611-311	611-310	1	—	—
TC100K/L/M Blazer	73-75	1	611-312	611-302	1	—	—
TC100A/B Blazer	76-77	1	611-312	611-312	1	—	—

Suzuki Street

Model	Year	Qt	Kevlar Front	Kevlar Rear	Qt	Sintered Front	Sintered Rear
TS100K/L/M Honcho	73-75	1	611-312	611-302	1	—	—
TS100A/B Honcho	76-77	1	611-302	611-302	1	—	—
TS100C/N/T/X	78-81	1	611-302	611-302	1	—	—
GN125Z/D	82-83	1	611-302	611-302	1	—	—
GN125EM-EV	91-97	1	610-425	611-302	1	610-425J	—
RV125K Tracker	1973	1	611-312	611-302	1	—	—
RV125L/M/A/B Tracker	74-77	1	611-302	611-302	1	—	—
SP125Z/D Dual Sport	82-83	1	610-120	611-302	1	—	—
SP125G/H/J Dual Sport	86-88	1	610-120	611-302	1	—	—
TC125K Prospector	1973	1	611-312	611-302	1	—	—
TC125L-B Prospector	74-77	1	611-302	611-302	1	—	—
TS125R/J/K Duster	71-73	1	611-312	611-302	1	—	—
TS125L/M/A/B Duster	74-77	1	611-302	611-302	1	—	—
TS125C/N/T/X	78-81	1	611-302	611-302	1	—	—
GT185K Adventurer	1973	1	—	611-302	1	—	—
GT185L-B Adventurer	74-77	1	610-301	611-302	1	—	—
TC185L/M/A/B Ranger	74-77	1	611-302	611-302	1	—	—
TS185R/J/K Sierra	71-73	1	611-312	611-302	1	—	—
TS185L/M/A Sierra	74-76	1	611-302	611-302	1	—	—
TS185B/C/N/T/X	77-81	1	611-302	611-302	1	—	—
SP200G/H/J	86-88	1	610-120	611-302	1	—	—
DR250SL-SES Dual	90-95	1	610-340	610-432	1	610-340J	—
GN250Z/D	82-83	1	—	611-302	1	—	—
GN250F	1985	1	—	611-302	1	—	—
GN250J	1988	1	—	611-302	1	—	—
GS250TT/TX	80-81	1	610-322	611-308	1	—	—
GS300LZ/LD	82-83	1	611-304	611-308	1	—	—
GS300LF	1985	1	—	611-308	1	—	—
GN400T/XT/XX	80-81	1	610-322	611-308	1	—	—
GN400TX/TZ	81-82	1	610-322	611-308	1	—	—
GS400B/C	77-78	1	610-318	611-305	1	—	—
GS400XB/XC	77-78	1	—	611-305	1	—	—
GSF400M/N/P Bandit	91-93	2	610-344/2	610-327	2	—	—
GS425N	1979	1	610-318	611-304	1	—	—
GS425EN	1979	1	610-318	611-308	1	—	—
GS450ET/EX/EZ/ED	80-83	1	610-318	611-308	1	—	—
GS450GAZ/GAD	82-83	1	610-318	611-308	1	—	—
GS450GAF/Automatic	1985	1	610-318	611-308	1	—	—
GS450LT/LX/LZ/LD	80-83	1	610-318	611-308	1	—	—
GS450LF/LG/L/LJ	85-88	1	610-318	611-308	1	—	—
GS450ST/SX	80-81	1	610-318	611-308	1	—	—
GS450TX/TZ	81-82	1	610-318	611-308	1	—	—
GS500EK-ES	89-95	1	610-427	610-327	1	610-427J	—
GS500ET-EK2	96-02	1	—	610-327	2	—	—
GS500FK4-LO	04-10	2	—	610-327	2	—	—
GSX-R750T/V/W/X	96-99	2	610-349	610-327	2	610-349J	—
GSX-R750Y/K1/K2/K3	00-03	2	610-344	610-327	2	610-344J	—
GSX-R750K4/K5	04-05	2	VD-355	VD-436	2	—	—
GSX-R750K6-LO	06-10	2	VD-355	VD-359	2	—	—
GT750J Lemans	1972	1	—	611-306	1	—	—
GT750K/-B Lemans	73-77	2	610-301	611-306	2	—	—
VS750GLP Intruder	88-91	1	610-331	611-321	1	—	—
VL800K1-K4 Volusia	01-04	1	—	611-321	1	—	—
VS800GLN-GLK4	92-04	1	610-331	611-321	1	—	—
Intruder							
VS800GLK5-K9	05-09	1	610-331	611-321	1	—	—
Boulevard S50							
VX800L/M/N/P	90-93	1	610-427	610-345/2	1	610-427J	—
VZ800V-K4 Marauder	97-04	1	—	611-321	1	—	—
VZ800K5-L0	05-10	1	—	611-321	1	—	—
Boulevard M50							
GS850GN	1979	2	610-318	610-306	2	—	610-306J
GS850GT/GX/GZ/GD	80-83	2	610-322	610-306	2	—	610-306J
GS850GLT-GLD	80-83	2	610-322	610-306	2	—	610-306J
XN85D Turbo	1983	1	610-324	610-306	2	—	610-306J
RF900RR/RS	94-95	2	610-343	610-350	2	610-343J	—
RF900RT/RV	96-97	2	610-343/2	610-349	2	—	—
RF900RZS	1995	2	610-343	610-350	2	610-343J	—
DL1000K2-K9 V-Storm	02-09	1	610-152	L 610-163	1	—	—
		1	—	R —	1	—	—

Suzuki Street

Model	Year	Qt	Kevlar Front	Kevlar Rear	Qt	Sintered Front	Sintered Rear
GS1000C/EC/N/EN	78-79	2	—	610-306	1	—	610-306J
GS1000ET	1980	2	610-324	610-306	2	—	610-306J
GS1000GT/GLT/GX/GLX	80-81	2	610-322	610-306	2	—	610-306J
GS1000LN	1979	2	—	610-306	2	—	610-306J
GS1000SN	1979	2	—	610-306	2	—	610-306J
GS1000ST	1980	2	610-324	610-306	2	—	610-306J
GS1000SZ Katana	1982	2	610-324	610-306	2	—	610-306J
GSX-R1000K1/K2	01-02	2	610-349	—	2	—	—
GSX-R1000K3	2003	2	—	—	2	—	—
GSX-R1000K4/K5/K6	04-06	2	VD-355JL	VD-436/2	2	—	—
GSX-R1000 K7-K8	07-08	2	VD-355JL	VD-359JL	2	—	—
GSX-R1000 K9-L1	09-11	2	VD-355JL	VD-174JL	2	—	—
GSX-R1000ZK4 Limited	2004	2	—	—	2	—	—
SV1000K3-K7 V Storm	03-07	2	610-344	610-163	2	610-344J	—
SV1000SK3-SK7	03-07	2	610-344	610-163	2	610-344J	—
TL1000RW-RK3	98-03	2	610-349	610-327	1	—	—
TL1000SV-SK1	97-01	2	610-344	610-163	2	610-344J	—
GS1100ET-ESD	80-83	2	610-324	610-306	2	—	610-306J
GS1100GZ-GLD	82-83	2	610-324	610-306	2	—	610-306J
GS1100GKZ-GKD	82-84	2	610-324	610-306	2	—	610-306J
GS1100LT	1980	2	610-324	610-306	2	—	610-306J
GS1100SD Katana	1983	2	610-324	610-306	2	—	610-306J
GSX1100FJ-FP Katana	88-93	2	610-345	610-331	2	—	—
GSX1100GM/GN/GP	91-93	2	—	610-345/2	2	610-427J	—
GSX-R1100G/H/J	86-88	2	610-331	610-327	2	—	—
GSX-R1100K/L/M/N	89-92	2	610-343	610-327	2	610-343J	—
GSX-R1100WP-WW	93-98	2	610-349	610-327	2	—	—
GS1150ES3-ESG	83-86	2	610-331	610-331	2	—	—
GSF1200S Bandit	96-99	2	610-343/3	610-327	2	—	—
GSF1200SV-W Bandit	97-98	2	610-343/2	610-327	2	—	—
GSF1200Y-SK5	00-05	2	610-349	610-327	2	—	—
GSF1200K6 Bandit	2006	2	610-344	610-163	2	610-344J	—
GV1200GL Madura	85-86	2	610-322	610-306	2	—	610-306J
GSX1300RK-K7	99-07	2	610-349	610-327	2	—	—
Hayabusa							
GSX1300K8-L1	08-11	2	VD-355JL	VD-359JL	2	—	—
Hayabusa							
GV1400GC Cavalcade	86-87	2	610-345/2	610-331	2	—	—
GV1400GDG Cavalcade	1986	2	610-331	610-331	2	—	610-127J
(up to frame number 103764)							
GV1400GDG Cavalcade	1986	2	610-331	—	2	—	—
(up to frame number 103765)							
GV1400GDH/GDJ	87-88	2	610-345/2	610-331	2	—	—
Calvacade							
GV1400GTG Clavacade	1986	2	610-331	610-331	2	—	—
GV1400GTH Cavalcade	1987	2	610-345/2	610-331	2	—	—
VS1400GLFH Intruder	1987	2	610-331	610-331	2	—	—
VS1400GLPH-GLPK4	87-04	2	610-331	610-331	2	—	—
Intruder							
VS1400 Boulevard S83	05-09	2	610-331	610-331	2	—	—
VL1500W-K1	98-01	2	610-331	610-331	2	—	—
Intruder 1500 LC							
VL1500K2/K3/K4	02-04	1	610-352	L —	1	—	—
Intruder 1500 LC		1	—	R —	1	—	—
VL1500LC	05-09	1	610-352	L —	1	—	—
Boulevard C90		1	—	R —	1	—	—
VL1500LC	2006	1	610-352	L —	1	—	—
Boulevard C90T		1	—	R —	1	—	—
VZ1600K4 Marauder	2004	2	610-349	—	2	—	610-435/2J
1600 Boulevard M95	2005	2	—	—		—	610-435/2J
1800 Boulevard M109R	06-11	2	—	—		—	610-435/2J

Suzuki ATV

ALT50D/E	83-84		—	611-323		—	—
LT50E/F/G/H	84-87		—	611-313		—	611-313NS
LT-A50K2-K5	02-05	2	611-310	611-323	2	—	—
LT80H-Y Quadrunner	87-00	2	611-323	611-314	2	—	—
LT80K1-K6 Quad Sport	01-06	2	611-323	611-314	2	—	—
ALT125D	1983		—	611-315		—	—

Brake Pads & Brake Shoes

Suzuki ATV

Model	Year	Qt	Kevlar Front	Kevlar Rear	Qt	Sintered Front	Sintered Rear
LT125D	1983		—	611-315		—	—
LT125E/F/G/H	84-87		—	611-309		—	—
LT160EK/EL/EM/EN	89-92	2	611-328	611-309	2	—	—
LT-F160M/N/P/R/S/T	91-96	2	611-328	611-309	2	—	—
ALT185E/F	84-85		—	611-309	2	—	—
L T185E/F/G/H	84-87		—	611-309	2	—	—
LT230EH-EP Quad	87-93	2	610-332	610-127/2	2	—	610-127/2J
LT230GEF/GEG	85-86	2	611-320	611-309	2	—	—
LT230SF	1985	2	610-332	610-127	2	—	610-127J
LT230SG/SH/SJ	86-88	2	610-332	610-127/2	2	—	610-127/2J
LT-F230G/H	86-87	2	611-320	611-309		—	—
LT250EFF/EFG	85-86	2	611-320	611-306		—	—
LT250R Quadracer	85-86	2	610-332	610-127	2	—	610-127J
LT250R Quadracer	87-92	2	610-332	610-341	2	—	610-341J
LT250SK/SL	89-90	2	610-332	610-127	2	—	610-127J
LT-4WDH-WDW	87-98	2	611-327	611-329	2	—	—
Quadrunner 4WD							
LT-F250K2-K7	02-06	2	610-120	—	2	—	—
Ozark 250 2WD							
LT-F250 K7-L2	07-12	2	VD-127/2	VB-332		—	—
Ozark 250							
LT-F250J-K1	88-01	2	611-327	611-329	2	—	—
Quadrunner 250							
LT-F250FX/FY/FK1/FK2	99-02	2	611-327	611-329	2	—	—
LT-Z250K4-K9	04-09	2	610-127/2J	—	2	610-127/2J	—
LT300E Quadrunner	87-89	2	611-320	611-306	2	—	—
LT-F300F King Quad	99-01	2	611-326	611-306	2	—	—
LT-F300FK2 King Quad	2002	2	610-250 L	611-306	1	—	—
		1	610-340 R	—	1	—	—
LT-F4WDXM-WDXW	91-98	2	611-326	611-306	2	—	—
King Quad							
LT-A400K2/K3/K4	02-04	2	610-120	610-308	2	—	—
Eiger Auto 2WD							
LT-F400K2/K3/K4	02-04	2	610-120	610-308	2	—	—
Eiger Manual 2WD							
LT-F400FK2-FK5	02-05	2	610-120	610-308	2	—	—
Eiger Auto 4WD							
LT-F400FK6	06-07	2	610-127/2	610-308	2	610-127/2J	—
Eiger Auto 4WD							
LT-F400F K8-L0	08-10	R	—	VB-308		—	—
		L	—	—		—	—
LT-Z400K3/K4/K5/K6	03-06	2	610-127/2	610-341	2	610-127/2J	—
LT-R450K6-L0 Quadracer	06-10	1	610-250 L	611-306	1	—	—
		1	610-340 R	—		—	—
LT500R Quadracer	87-90	2	610-332	610-341	2	—	—
LT-A500FY/FK1	00-01	2	610-250 L	611-306	1	—	—
		2	610-340 R	—	1	—	—
LT-A500FK2 Vinson	2002	2	610-120	—	2	—	—
LT-A500FK3 Vinson	2003	2	610-120	—	2	—	—
LT-A500FK4-FK7	04-07	2	610-127/2	—	2	610-127/2J	—
Vinson 4WD							
LT-F500FW-FK2	98-02	1	610-250 L	611-306	1	—	—
		1	610-340 R	—	1	—	—
LT-F500FK3 Quad	2003	2	610-120	—	2	—	—
LT-F500 K4-K7	04-07	2	610-127/2	—	2	610-127/2J	—
LT-A700XK5-K7	05-07	R	—	—	1	—	—
King Quad		L	—	—	1	—	—
LT-V700FK4/FK5	04-05	1	—	—	1	—	—

Suzuki Dual Sport & Offroad

Model	Year	Qt	Kevlar Front	Kevlar Rear	Qt	Sintered Front	Sintered Rear
JR50C-K6	83-84	1	611-313	611-313	1	611-313NS	611-313 NS
OR50N	84-87	1	611-312	611-312	1	—	—
OR50T	02-05	1	611-310	611-310	1	—	—
RM50C/N/T	87-00	1	611-312	611-312	1	—	—
RM60X/Z	01-06	1	611-310	611-310	1	—	—
RM60K3	1983	1	611-417	611-417	1	611-417NS	611-417 NS
RM60N/T	84-86	1	611-312	611-312	1	—	—
RM60X/Z/D	81-83	1	611-310	611-310	1	—	—
RM65K3/K4/K5	03-05	1	—	610-120	1	—	—

Suzuki Dual Sport & Offroad

Model	Year	Qt	Kevlar Front	Kevlar Rear	Qt	Sintered Front	Sintered Rear
TM75L/M/A	74-76	1	611-312	611-312	1	—	—
TS7M/A/B/Colt	75-77	1	611-312	611-312	1	—	—
DS80C/N	78-79	1	611-312	611-312	1	—	—
DS80 T-Y	80-00	1	611-310	611-310	1	—	—
JR80 K1-K7	01-07	1	611-310	611-310	1	—	—
RM80B/C/N	77-79	1	611-312	611-312	1	—	—
RRM80T/X	80-81	1	611-310	611-310	1	—	—
RM80Z/D/E/F	82-85	1	—	611-226	1	—	611-226NS
RM80G/H/J/K	86-89	1	610-342	611-226	1	—	611-226NS
RM80L/M/N/P/R/S	90-95	1	610-342	610-342/2	1	—	—
RM80T/V/W/X/Y/K1	96-01	1	610-351	610-342/2	1	—	—
RM85K2/K3/K4	02-04	1	610-351	610-342/2	1	—	—
RM85K5-L2	05-12	1	610-438	—	1	—	—
RM85LK2/LK3/LK4	02-04	1	610-351	610-342/2	1	—	—
RM85LK5-L2	05-12	1	610-438	—	1	—	—
RV90J/K/L/M/A/B Rover	76-77	1	611-312	611-312	1	—	—
A100A/B Gopher	76-77	1	611-302	611-312	1	—	—
RM100K3	2003	1	610-438	610-127/2	1	—	610-127/2J
DR-Z110K3	2003	1	611-417	611-312	1	—	—
DR-Z110K4/K5	04-05	1	611-417	—	1	—	—
DR125Z/D/E	82-84	1	611-302	611-302	1	—	—
DR125G/H/J	86-88	1	610-120	611-302	1	—	—
DR125SER/SES/SET	94-96	1	610-120	611-302	1	—	—
DR-Z125K3-K9	03-09	1	611-310	611-310	1	—	—
DR-Z125LK3-K9	1988	1	610-351	611-310	1	—	—
RM125M/A/B/C	75-78	1	611-302	611-302	1	—	—
RM125N/T	79-80	1	611-302	611-309	1	—	—
RM125X/Z/D	81-83	1	611-314	611-316	1	—	611-316NS
RM125E	1984	1	—	611-316	1	—	611-316NS
RM125F/G	85-86	1	610-329	611-316	1	—	611-316NS
RM125H	1987	1	610-340	611-316	1	—	611-316NS
RM125J	1988	1	610-340	610-127	1	—	610-127J
RM125K/L	89-90	1	610-340	610-432	1	—	—
RM125M/N	91-92	1	610-340	610-432	1	—	—
RM125P	1993	1	610-340	610-332	1	—	610-332J
RM125R/S	94-95	1	610-340	610-432/2	1	—	—
RM125T-K1-K5	96-05	1	610-161	610-144	1	—	—
RM125K6	2006	1	610-161	610-144/2	1	—	—
RM125K7-K9	07-09	1	610-161	610-144	1	—	—
RM125K Tracker	1973	1	611-312	611-302	1	—	—
RV125L/M/A/B Tracker	74-77	1	611-302	611-302	1	—	—
SP125Z/D Dual Sport	82-83	1	611-302	611-302	1	—	—
SP125G/H/J Dual Sport	86-88	1	610-120	611-302	1	—	—
TC125L-B Prospector	74-77	1	611-302	611-302	1	—	—
TM125K/L/M	73-75	1	611-312	611-302	1	—	—
TS125R/J/K Duster	71-73	1	611-302	611-302	1	—	—
TS125L/M/A/B Duster	74-77	1	611-302	611-302	1	—	—
TS125C/N/T/X	78-81	1	611-302	611-302	1	—	—
PE175C/N	78-79	1	611-302	611-302	1	—	—
PE175T/X	80-81	1	611-302	—	1	—	—
PE175Z/D/E	82-84	1	611-314	—	1	—	—
RS175T/X/Z	80-82	1	611-302	611-311	1	611-302NS	—
DS185C/N/T	78-80	1	611-302	611-302	1	611-302NS	—
TC185L/M/A/B	74-77	1	611-302	611-302	1	611-302NS	—
TS185R/J/K	71-73	1	611-312	611-302	1	611-312NS	—
TS185L/M/A Sierra	74-76	1	611-302	611-302	1	611-302NS	—
TS185B/C/N/T/X	77-81	1	611-302	611-302	1	611-302NS	—
DR200G/H/J	86-88	1	610-120	611-302	1	—	—
DR200S P-K9 Dual	93-09	1	610-120	611-302	1	—	—
SP200G/H/J	86-88	1	610-120	611-302	1	—	—
DR250Z/D	82-83	1	611-302	611-302	1	611-302NS	—
DR250F	1985	1	610-120	611-302	1	—	—
DR250L/M/N/P/R/S	90-95	1	610-340	610-432	1	610-340J	—
DR250SL-SES Dual	90-95	1	610-340	610-432	1	610-340J	—
DR-Z250K1-K7	01-07	1	610-161	610-432/2	1	610-161J	—
DS250T	1980	1	611-309	611-309	1	611-309NS	—
PE250B/C/N	77-79	1	611-309	611-309	1	611-309NS	—
PE250T/X	80-81	1	611-312	611-309	1	610-312NS	—
RM250A/B/C/C2	76-78	1	610-312	611-309	1	611-302NS	—
RM250N/T	79-80	1	611-309	611-318	1	611-309NS	—

Suzuki Dual Sport & Offroad

Model	Year	Qt	Kevlar Front	Kevlar Rear	Qt	Sintered Front	Sintered Rear
RM250X/Z	81-82	1	611-315	611-316	1	—	—
RM250D/E	83-84	1	—	611-316	1	—	—
RM50F/G	85-86	1	610-329	611-316	1	—	—
RM250H/J	87-88	1	610-340	610-127	1	—	—
RM250K/L	89-90	1	610-340	610-432	1	—	—
RM250M/N	91-92	1	610-340	610-332	1	—	—
RM250P/R/S	93-95	1	610-340	610-432/2	1	—	—
RM250T-K5	96-05	1	610-161	610-144	1	—	—
RM250K6	2006	1	610-161	610-144/2	1	—	—
RM250K7-K9	07-09	1	610-161	610-144	1	—	—
RMX250K/L	89-90	1	610-340	610-432	1	—	—
RMX250M/N/P/R/S	91-95	1	610-340	610-432/2	1	—	—
RMX250T/V/W	96-98	1	610-161	—	1	—	—
RM-Z250K4-K9	04-09	1	610-161	—	1	—	—
RM-Z250 L0-L2	10-12	1	610-161	—	1	—	—
RS250T/X	80-81	1	611-302	611-309	1	—	—
SP250Z/D	82-83	1	611-318	611-302	1	—	—
SP250F	1985	1	610-120	611-302	1	—	—
TM250J/K/L/M	72-75	1	611-302	611-309	1	—	—
TS250R-B Savage	71-77	1	611-309	611-309	1	—	—
TS250C/N/T/X	79-81	1	611-309	611-309	1	—	—
DR350L/M	90-91	1	610-340	610-432	1	—	—
DR350N/P/R/S/T	92-96	1	610-340	610-432/2	1	—	—
DR350V/W/X	97-99	1	610-161	610-432/2	1	—	—
DR350SL-SEV Dual	90-97	1	610-340	610-432	1	—	—
DR350SEW/SEX Dual	98-99	1	610-161	610-432	1	—	—
DR370C/N	78-79	1	611-302	611-309	1	—	—
RM370A/B	76-77	1	611-302	611-309	1	—	—
SP370C/N/T	78-80	1	611-309	611-309	1	—	—
DR400T	1980	1	611-302	611-309	1	—	—
DR-Z400EY-EK7	00-07	1	610-161	610-144	1	—	—
DR-Z400Y-K4	00-04	1	610-161	610-144	1	—	—
DR-Z400S Y-L2 Dual	00-12	1	610-161	610-144	1	—	—
DR-Z400SM K5-K9	05-09	1	610-161	610-144	1	—	—
Supermotard							
PE400T/X	80-81	1	611-309	611-309	1	—	—
RM400C	1978	1	611-302	611-309	1	—	—
RM400N/T	79-80	1	611-309	611-318	1	—	611-318NS
SP400T	1980	1	611-309	611-309	1	—	—
TM400R/J/K/L/M	71-75	1	611-309	611-309	1	—	—
TS400J/-B Apache	72-77	1	611-309	611-309	1	—	—
RMZ450K5/K6/K7	05-07	1	610-161	—	1	—	—
RM-Z450 K8-L2	08-12	1	610-161	—	1	—	—
RM-X450 K5-K7	05-07	1	610-161	—	1	—	—
RM-X450 K8-L1	08-11	1	611-315	611-314	1	—	—
RM465X/Z	81-82	1	611-302	611-309	1	—	—
DR500X/Z/D	81-83	1	—	611-314	1	—	—
RM500D/E	83-84	1	611-309	611-309	1	—	—
SP500X/Z/D	81-83	1	610-329/2	611-302	1	—	—
SP600F	1985	1	610-329/2	611-302	1	610-127/2J	—
DR650SL-SES Dual	90-95	1	610-347	610-348	1	—	—
DR650SE T-L1 Dual	96-11	1	610-161	610-432	1	—	—

Triumph

Daytona 600	03-04	2	610-343	610-163	2	610-343J	—
Speedfour 600	02-05	2	610-343	—	2	610-343J	—
TT600	00-03	2	610-343	—	2	610-343J	—
Daytona 650	2005	2	610-343	610-163	2	610-343J	—
Bonneville 650	01-05	1	610-156/3	—	1	—	—
Boneville America	02-05	1	610-156/3	610-156/3	1	—	—
Boneville T100	02-08	1	610-156	610-340	1	—	—
Centennial							
Speedmaster 800	05-09	2	610-156/3	610-340	2	—	—
Thruxton 900	2004	1	610-156/3	—	1	—	—
Adventurer	96-01	1	610-156	610-156	1	—	—
T590 Speed Triple	97-01	2	610-343	—	2	610-343J	—
Thunderbird 900	95-03	1	610-156	610-156/2	1	—	610-156/2J
Adventurer 900	96-00	1	610-156/3	610-156/3	1	—	—
Daytona 900	95-96	2	610-343	—	2	610-343J	—

Triumph

Model	Year	Qt	Kevlar Front	Kevlar Rear	Qt	Sintered Front	Sintered Rear
Daytona 955i	99-00	2	610-343	—	2	610-343J	—
Legend TT	99-01	2	610-156/3	610-156/3	2	—	—
Sprint 900	95-97	2	610-343	—	2	610-343J	—
Sprint Executive	1998	2	610-343	—	2	610-343J	—
Sprint SS	97-98	2	610-343	—	2	610-343J	—
Super Daytona III	95-96	1	610-258	—	1	—	—
Thruxton	04-11	1	610-156/3	—	1	—	—
Thunderbird	00-03	1	610-156/3	610-156/3	1	—	—
Thunderbird Sport 900	98-00	1	610-156/3	610-156/3	1	—	—
Thunderbird Sport 900	2003	2	610-156/3	610-156/3	2	—	—
Thunderbird Two-Tone	1996	1	610-156/3	610-156/3	1	—	—
Tiger	1993	1	610-340 L	—	1	—	—
		1	610-250 R	—	1	—	—
Tiger 900	95-96	1	610-340 L	—	1	—	—
		1	610-250 R	—	1	—	—
Tiger 900	97-98	2	610-156/3	610-156/3	2	—	—
Tiger 900	99-00	2	610-156	610-156/2	2	—	—
Trident 900	95-98	1	610-340 L	—	1	—	—
		1	610-250 R	—	1	—	—
Trophy 900	95-01	2	610-343	—	2	610-343J	—
DaytonaT595	97-00	2	610-343	610-340	2	610-343J	—
Daytona 955i	01-05	2	610-343	—	2	610-343J	—
Speed Triple	94-97	2	610-343	—	2	610-343J	—
(Carb model)							
Speed Triple	98-04	2	610-343	—	2	610-343J	—
Sprint RS	99-02	2	610-343	—	2	610-343J	—
Sprint RS	03-04	2	610-343	—	2	610-343J	—
Sprint RS	99-04	2	610-343	—	2	610-343J	—
(single side swing arm)							
Sprint ST	99-09	2	610-343	—	2	610-343J	—
Sprint ST ABS	10-11	2	610-343	VD-340/2	2	—	—
Tiger 955	99-05	2	610-156/3	610-156/3	2	—	—
Speed Triple	2005	2	610-443	—	2	—	—
Sprint ST	05-09	2	610-343	—	2	610-343J	—
Daytona 1200	95-97	2	610-343	—	2	610-343J	—
Daytona 1200 SP	1999	2	610-343	—	2	610-343J	—
Trophy 1200	95-03	2	610-343	—	2	610-343J	—
Rocket III	2004	2	610-343	—	2	610-343J	—

Yamaha Street

CA50K/L/N/S Riva 50	83-86	1	611-224	611-226	1	—	611-226NS
CE50S/T Jog	86-87	1	611-224	611-226	1	—	611-226NS
CG50T/U/W/A/B Jog	87-91	1	611-224	611-226	1	—	611-226NS
CV50L Riva 50	1984	1	611-229	611-229	1	—	—
CW50W Zuma	1989	1	611-229	611-229	1	—	—
CW50TA Zuma	1990	1	611-229	611-229	1	—	—
CW50TJ Zuma II	1997	1	611-229	611-229	1	—	—
CY50D-N Jog	92-01	1	611-226	611-229	1	611-226NS	—
DT50U/W/A	88-90	1	611-229	611-229	1	—	—
LB50PE-PJ Chappy	78-82	1	611-212	611-212	1	—	—
LC50G/H Champ	80-81	1	611-226	611-226	1	—	—
MJ50J Towny	1982	1	611-224	611-224	1	—	—
QT50F-T Yamahopper	79-87	1	611-224	611-224	1	—	—
RX50K/L/MK	83-84	1	610-228	611-212	1	610-228J	—
SH50T-N Razz	87-01	1	611-224	611-226	1	—	611-226NS
SH50MT/MU/MW Razz	87-89	1	611-224	611-226	1	—	611-226NS
SH50MD	1991	1	611-224	611-226	1	—	611-226NS
YSR50T/U/W/A/B/D	87-92	1	610-239	611-239	1	611-229	611-229NS
BW80S/T/U Big Wheel	86-88	1	611-226	611-226	1	611-226NS	611-226NS
BW80A Big Wheel	1990	1	611-226	611-226	1	611-226NS	611-226NS
CV80K/L/N/S/T/ Riva	83-87	1	611-229	611-229	1	—	—
DT80H/J	81-82	1	611-212	611-212	1	—	—
DT80K	1983	1	611-229	611-229	1	—	—
GT80A/B/C	74-76	1	611-212	611-212	1	—	—
GT80E/F/G	78-80	1	611-212	611-212	1	—	—
DT100A-J	74-82	1	611-212	611-212	1	—	—
DT100K	1983	1	611-229	611-229	1	—	—
RS100B/C	75-76	1	611-212	611-212	1	—	—
DT125A/B/C Enduro	74-76	1	611-223	611-223	1	—	—
DT125E/F/G/H Enduro	78-82	1	611-223	611-223	1	—	—

Brake Pads & Brake Shoes

Yamaha Street

Model	Year	Qt	Kevlar Front	Kevlar Rear	Qt	Sintered Front	Sintered Rear
RD125B/C	75-76	1	611-237	611-223	1	—	—
XC125N/NC-D Riva	85-92	1	—	611-223	1	—	—
XC125E-N Riva	93-01	1	—	611-239	1	—	611-239NS
XT125J/K/KC Dual	82-83	1	611-223	611-229	1	—	—
DT175A/B/C Enduro	74-76	1	611-223	611-223	1	—	—
DT175E/F/G/H Enduro	78-81	1	611-223	611-223	1	—	—
XC180DN/DNC Riva	1985	1	—	611-228	1	—	—
XC180K/KC-N/NC Riva	83-85	1	—	611-228	1	—	—
XC180Z Riva	84-85	1	—	611-228	1	—	—
SR185H/J Exciter	81-82	1	611-223	611-229	1	—	—
BW200N/S Big Wheel	85-87	1	611-229	611-229	1	—	—
BW200E Big Wheel	86-88	1	611-229	611-229	1	—	—
RD200A/B	74-75	1	611-206	611-228	1	—	—
RD200C	1976	1	—	611-228	1	—	—
XC200T-B Riva	87-91	1	—	611-228	1	—	—
XC200ZT-ZA Riva	87-90	1	—	611-228	1	—	—
XT200J/K/KC Dual	82-83	1	611-223	611-229	1	—	—
XT225D/DC-M/MC	92-00	1	610-239	611-229	1	—	—
XT225N/NC-V/VC	01-06	1	610-236	611-229	1	—	—
DT250A Enduro	1974	1	611-228	611-228	1	—	—
DT250B/C/D/E/F	75-79	1	610-235	611-223	1	—	—
SR250G/H/J Exciter	80-82	1	611-220	611-223	1	—	—
SR250TH Exciter	1981	1	611-220	611-223	1	—	—
SRX250T/TC	1987	1	610-240	611-228	1	—	—
XT250G/H/J	80-82	1	611-223	611-223	1	—	—
XT250K/KC/L/LC Dual	83-84	1	611-223	611-223	1	—	—
XV250U/UC-A/AC	88-90	1	610-235	611-223	1	—	—
XV250G/GC/H/HC/K/KC	95-98	1	610-260	611-239	1	611-239NS	—
Route 66							
XV250L/LC Virago 250	1999	1	610-260	611-239	1	—	—
XV250P X-P	08-12	1	610-260	611-239	1	—	—
BW350T/U	87-88	1	611-229	611-229	1	—	—
RD350/A/B	73-75	1	610-204	611-225	1	—	—
RZ350L/LC/N/NC	84-85	1	610-235	610-236	1	—	—
XT350N/NC-A/AC Dual	85-90	1	610-239	611-223	1	—	—
XT350B/BC-M/MC Dual	91-00	1	610-239	611-239	1	611-239NS	—
XS360C/D/2D	76-77	1	610-205	611-231	1	—	—
DT400B/C/D/E	75-78	1	611-220	611-228	1	—	—
FZR400U/SUC/W/SWC	88-89	1	610-236	610-240	1	—	—
FZR400A/SAC	1990	1	610/242/2	610-240	1	—	—
RD400C/D/E	76-78	1	610-204	610-204	1	—	—
RD400F	1979	1	610-215	610-215	1	—	—
XS400D/E/F (mag)	77-79	1	610-205	610-205	1	—	—
XS4002E/2F (spoke)	78-79	1	611-206	611-231	1	—	—
XS400G/H Special	80-81	1	611-206	611-231	1	—	—
XS400J/K Maxim	82-83	1	610-235	611-231	1	—	—
XS400RJ/RK Seca	82-83	1	610-235	611-231	1	—	—
XS400SG/SH Special	80-81	1	610-215	611-231	1	—	—
XS400SJ Special	1982	1	611-206	611-231	1	—	—
SR500E/F	78-79	1	610-205	610-205	1	—	—
SR500G/H	80-81	1	610-205	610-228	1	611-228NS	—
TX500/A	73-74	1	610-204	611-227	1	611-227NS	—
XS500B	1975	1	610-204	611-227	1	611-227NS	—
XS500C/D/E	76-78	1	610-205	610-205	1	—	—
XT500C-H Dual Sport	76-81	1	611-220	611-228	1	611-220NS	611-228NS
XV500K Virago	1983	1	610-235	611-227	1	—	611-227NS
XV535T/TC/U Virago	87-88	1	610-246	611-230	1	—	611-230NS
XV535A/AC Virago	1990	1	610-246	611-230	1	—	611-230NS
XV535E/EC-L/LC	93-99	1	610-246	611-230	1	—	611-230NS
XV535SF/SFC-SJ/SJC	94-97	1	610-246	611-230	1	—	611-230NS
XJ550H/J/K/ Maxim	81-83	1	611-228	611-227	1	610-228J	611-227NS
XJ550RH/RJ/RK Seca	81-83	1	611-228	611-231	1	610-228J	—
XT550J/K Dual Sport	82-83	1	611-228	611-228	1	—	—
XZ550RJ/RK Vision	82-83	2	610-235	611-227	2	611-227NS	—
FJ600L/LC/N/NC	84-85	2	610-236	610-236	2	—	—
FZ600S/SC/T/TC/U/UC	86-88	2	610-236	610-240	2	—	—
FZ600T/TC/V/VC FZ6	05-06	2	610-260	—	2	—	—
FZ600 W-Y FZ6	07-09	2	610-248	VD-163	2	—	—
FZ600S FZ6	04-05	2	610-260	—	2	—	—
FZR600W/WC/AC	89-90	2	610-236	610-236	2	—	—
FZR600R	90-99	2	610-251	610-236	2	610-251J	—
SRX600S/SC	1986	2	610-240	610-240	2	—	—
XJ600S Seca II	92-98	2	610-255	610-240	2	—	—

Yamaha Street

Model	Year	Qt	Kevlar Front	Kevlar Rear	Qt	Sintered Front	Sintered Rear
XT600L/LC-W/WC	84-89	1	610-235	611-228	1	—	—
XT600E Dual Sport	90-95	1	610-252	611-239	1	—	611-239NS
YX600 Radian	86-90	2	610-236	611-227	1	—	611-227NS
YZF600R	95-96	2	610-251	610-236	2	—	610-251J
YZF600R	97-07	2	610-248	610-236	2	610-248J	—
YZF-R6L/LC-P/PC	99-02	2	610-248	—	2	610-248J	—
YZF-R6R/RC-B	03-12	2	610-248	VD-163/2	2	610-248J	SD-163/2
YZF-R6SN/SNC	2001	2	610-248	—	2	610-248J	—
Champions Limited Edition							
YZF-R6SPV/SPVC	2006	2	610-248	VD-163/2	2	610-248J	SD-163/2
50th Anniversary							
YZF-R65 R-B	03-12	2	610-248	VD-163/2	2	610-248J	SD-163/2
YZF-R6SV/Y/YC	06-09	2	610-248	VD-163/2	2	610-248J	SD-163/2
XJ650G/H/J/K/ Maxim	80-83	1	610-216	611-227	1	—	611-227NS
XJ650LH Midnight	1981	1	610-216	611-227	1	—	611-227NS
XJ650LJ/LK Turbo	82-83	1	610-216	611-227	1	—	611-227NS
XJ650RJ Seca	1982	2	610-205	611-230	1	—	611-230NS
XS1/XS1B-650	70-71	1	—	611-225	1	—	—
XS2-650	1972	1	610-204	611-225	1	—	—
TX650A	73-74	1	610-204	611-225	1	—	—
XS650B/C	75-76	1	610-204	611-225	1	—	—
XS650D/E/F/2F	77-79	1	610-205	611-225	1	—	—
XS650G/H Special II	80-81	1	610-205	611-225	1	—	—
XS650S Special	78-80	1	610-205	611-205	1	—	—
XS650SH Special	1981	1	610-205	611-225	1	—	—
XS650SJ/SK	82-83	1	610-205	611-225	1	—	—
Heritage Special							
XVS650AK-Z	98-10	1	610-255	611-230	1	—	611-230NS
V-Star Classic							
XVS650 R/RC-Z/ZC	03-10	1	610-255	611-230	1	—	611-230NS
V-Star Silverado							
XVS650 V-Star Custom	98-04	1	610-255	611-230	1	—	611-230NS
XVS650S/SC-AB-ACB	04-11	1	610-255	611-230	1	—	611-230NS
VStar Midnight Custom							
FZ700T/TC	1987	2	610-236	610-236	2	—	—
FZX700 Fazer	86-87	2	610-236	610-236	2	—	—
XS750D/2D/E/F	77-79	2	610-205	611-205	2	—	—
XJ700 Maxim	85-86	2	610-236	611-230	2	—	611-230NS
XJ700X Maxim X	85-86	2	610-236	611-230	2	—	611-230NS
XV700CS/CSC/CT/CTC	86-87	2	610-236	611-230	2	—	611-230NS
XV700L/LC-T/TC Virago	84-87	2	610-236	611-230	2	—	611-230NS
FZ750N/S/SC	85-86	2	610-236	611-236	2	—	—
FZ750U/UC	1988	2	610-236	611-236	2	—	—
FZR750RT/RU	87-88	2	610-242/2	611-236	2	—	—
TX750/A	73-74	1	610-204	611-230	1	—	611-230NS
XS400J/K Maxim	82-83	2	610-235	611-230	2	—	611-230NS
XJ750MK Midnight	1983	2	610-235	611-230	2	—	611-230NS
XJ750RH/RJ/RK Seca	81-83	1	610-228	611-230	1	610-228NS	611-230NS
XS750SE/SF Special	78-79	1	610-216 L	610-205	1	—	—
		1	610-215 R	—	1	—	—
XV750H/J/K Virago	81-83	1	610-216	611-227	1	—	611-227NS
XV750MK Midnight	1983	1	610-216	611-227	1	—	611-227NS
XV750U/UC-J/JC	88-97	1	610-236	611-230	1	—	611-230NS
Virago							
XV750H1/H1C/J1/J1C	96-97	2	610-236	611-230	2	—	611-230NS
YZF750RF/RFC	1994	2	610-258	610-236	2	—	—
YZF750R	96-98	2	610-258	610-236	2	—	—
TDM 850D/DC/E/EC	92-93	2	611-242/2	610-236	2	—	—
XS850G/H	80-81	2	610-205	610-205	1	—	—
XS850LG/LH Midnight	80-81	1	610-216 L	610-215	1	—	—
		1	610-215 R	—	1	—	—
XS80SG/SH Special	80-81	1	610-216 L	610-215	1	—	—
		1	610-215 R	—	1	—	—
XJ900RK Seca	1983	2	610-236	610-236	2	—	—
XV920J Virajo	1982	2	610-228	611-230	1	610-228J	611-230NS
XV920K Virajo	1983	1	610-216	611-230	1	—	611-230NS
XV920MK Midnight	1983	1	610-216	611-230	1	—	611-230NS
XV920RH/RJ	81-82	2	610-205	611-230	2	—	611-230NS
FZR1000T/TC/U/UC	87-88	2	610-242/2	610-236	2	—	—
FZR1000W/WC/A/AC	89-90	2	610-251	610-236	2	610-251J	—
FZR1000B/BC-E/EC	91-93	2	610-257	610-236	2	—	—
FZR1000F/FC/G/GC	94-95	2	610-258	610-236	2	—	—
FZS1000 FZ1	01-05	2	610-248	—	2	610-248J	—

Yamaha Street

Model	Year	Qt	Kevlar Front	Kevlar Rear	Qt	Sintered Front	Sintered Rear
FZS1000V/VC FZ1	06-09	2	610-248	VD-163/2	2	610-248J	—
FZS1000SP FZ1	2003	2	610-248	—	2	610-248J	—
GTS1000A	93-94	2	610-259	610-236	2	—	—
XV1000L/LC/N/NC	84-85	2	610-236	610-236	2	—	—
YZF1000RJ/RJC	1997	2	610-248	610-236	2	610-248J	—
YZF-R1K/KC-N/NC	98-01	2	610-248	—	2	610-248J	—
YZF-R1P/PC/R/RC	02-03	2	610-248	—	2	610-248J	—
YZF-R1S/SC-V/VC	04-06	2	610-248	VD-163/2	2	610-248J	—
YZF R-1 W-B	07-12	2	VD-277	VD-163/2		—	—
YZF-R1LEV/LEVC	2006	2	610-248	VD-163/2	2	610-248J	—
Limited Edition							
YZF-R1SPV/SPVC	2006	2	610-248	VD-163/2	2	610-248J	—
50th Anniversary Edition							
YZF-R1SN/SNC	2001	2	610-248	—	2	610-248J	—
Champions Limited Edition							
FJ1100L/LC/N/NC	84-85	2	610-236	610-236	2	—	—
XJ1100J Maxim	1982	2	610-228	610-215	2	610-228J	—
XS1100E/F/G/H	78-81	2	610-205	610-205	2	—	—
XS100LG Midnight	1980	1	610-216 L	610-205	1	—	—
		1	610-215 R	—	1	—	—
XS1100LH Midnight	1981	2	610-228	610-215	2	610-228J	
XS1100S Special	79-81	1	610-216 L	610-205	1	—	—
		1	610-215 R	—	1	—	—
XV1100S/UC-L/LC	86-99	1	610-236	611-230	2	—	611-230NS
XV1100S Virago S	96-98	2	610-236	611-230	2	—	611-230NS
XVS100L/LC-T	99-09	2	610-260	610-236	2	—	—
V-Star 1100 Custom							
XVS1100 V-Star Classic	00-06	2	610-260	610-236	2	—	—
XVS1100S/SC-Y/YC	04-09	2	610-260	610-236	2	—	—
V-Star Silverado							
FJ1200S/SC/T/TC	86-87	2	610-236	610-236	2	—	—
FJ1200W/W-D/DC	89-92	2	610-242/2	610-236	2	—	—
FJ1200A (ABS)	92-93	2	610-242/2	610-236	2	—	—
VMX12 V-Max	85-86	2	610-236	610-236	2	—	—
VMX12 V-Max	88-92	2	610-236	610-236	2	—	—
VMX12 V-Max E/EC-W1C	93-07	2	610-251	610-236	2	610-251J	—
XVZ12TK/L/KC2	83-84	2	610-236	610-236	2	—	—
Venture							
XVZ12TDK	1983	2	610-236	610-236	2	—	—
Venture Royale							
XVZ12DL/DKC2/DN	84-85	2	610-236	610-236	2	—	—
Venture Royale							
FJR1300R/RC-T/TC	03-05	2	610-248	—	2	610-248J	—
FJR1300AS (ABS)	04-05	2	610-248	—	2	610-248J	—
FJR1300 AV-B	06-12	2	VD-353JL	VD-269/2	2	—	—
XVZ13T/TC/U/UC	87-88	2	610-242	610-242	2	—	—
Venture							
XVZ13D Royale	86-93	2	610-242	610-242	2	—	—
XVZ1300A Royal Star	96-98	2	610-242	610-242	2	—	—
XVZ1300A Boulevard	99-01	2	610-242	610-242	2	—	—
XVZ1300A	96-00	2	610-242	610-242	2	—	—
Royal Star Tour Classic							
XVC1300C	2005	2	610-255	610-242	2	—	—
Royal Star Tour Deluxe							
XVZ1300CT T/TC-Y	05-09	2	610-255	610-242	2	—	—
Royal Star Tour Deluxe							
XVZ1300CTM V/VC-W/WC	06-07	2	610-255	610-242	2	—	—
Royal Star Midnight Tour Deluxe							
XVZ1300LT	97-01	2	610-242	610-242	2	—	—
Royal Star Tour Deluxe							
XVZ1300TFSMC	2000	2	610-255	610-242	2	—	—
Royal Star Venture MM							
XVZ1300TF	99-09	2	610-255	610-242	2	—	—
Royal Star Venture							
XVZ1300TF S	08-12	2	610-255	610-242	2	—	—
Royal Star Midnight Venture							
XV1600A Road Star	99-03	2	610-255	610-242	2	—	—
XV1600AT	99-03	2	610-255	610-242	2	—	—
Road Star Silverado							
XV1600ASM/ASMC	2000	2	610-255	610-242	2	—	—
Road Star MM Limited							
XV1600AS Midnight	01-03	2	610-255	610-242	2	—	—

Yamaha Street

Model	Year	Qt	Kevlar Front	Kevlar Rear	Qt	Sintered Front	Sintered Rear
XV1600ALER/ALERC	2003	2	610-255	610-242	2	—	—
Road Star Limited Edition							
XXV1600ATL	2003	2	610-255	610-242	2	—	—
Road Star Silverado Limited Edition							
XV1700A S Road Star	08-12	2	610-248	610-242	2	610-248J	—
XV1700AM	04-07	2	610-248	610-242	2	610-248J	—
Road Star Midnight							
XV1700AT	04-10	2	610-248	610-242	2	610-248J	—
Road Star Silverado							
XV1700ATM	04-07	2	610-248	610-242	2	610-248J	—
Road Star Midnight Silverado							
XV1700AW Road Star	05-09	2	610-248	610-242	2	610-248J	—
XV1700PC	02-06	2	610-248	—	2	610-248J	—
Road Star Warrior							
XV1700PCM	06-09	2	610-248	—	2	610-248J	—
Road Star Midnight Warrior							
XV1700PCR/PCRC	2003	2	610-248	—	2	610-248J	—
Road Star Warrior							
XV1900CTMV/C-A	06-11	2	610-248	—	2	610-248J	—
Stratoliner Midnight							
XV1900CTSV/C-Z	06-10	2	610-248	—	2	610-248J	—
Stratoliner S							
XV1900CT A-V	06-11	2	610-248	—	2	610-248J	—
Stratoliner							
XV1900MV-Y	06-09	2	610-248	—	2	610-248J	—
Roadliner Midnight							
XV1900SV-Z	06-10	2	610-248	—	2	610-248J	—
Roadliner S							
XV1900V/VC	2006	2	610-248	—	2	610-248J	—
Roadliner							

Yamaha ATV

YFM50S-Y Raptor	04-08	2	611-229	611-239	2	—	611-239NS
YFM50S-T Raptor 50	04-05	2	611-229	611-239	2	—	611-239NS
YF60S	1986	2	—	611-229		—	—
YT60L/N Tri-Zinger	84-85	2	—	611-229		—	—
YFM80N/S/T/U Moto-4	85-88	2	—	611-223	2	—	—
YFM80D-N Badger	92-01	2	611-229	611-239	2	—	611-239NS
YFM80GT/GV Grizzly	05-06	2	611-229	611-239	2	—	611-239NS
YFM80GHV-Y Grizzly	06-08	2	611-229	611-239	2	—	611-239NS
YFM80RT-Y Raptor	05-08	2	611-229	611-239	2	—	611-239NS
YFM80W Raptor	02-04	2	611-229	611-239	2	—	611-239NS
YFM100T-/B Champ	87-91	2	611-229	611-223	2	—	—
YFA1 Breeze	89-91	2	611-229	611-223	2	—	—
YFA1 Breeze	92-04	2	611-229	611-239	2	—	611-239NS
YFM125S Grizzly 125	2004	2	611-229	611-239	2	—	611-239NS
YFM125GT-V Grizzly	05-12	2	611-229	611-239	2	—	611-239NS
YFM125GHT-Y Grizzly	05-08	2	611-229	611-239	2	—	611-239NS
YT125G-N Tri-Moto	80-85	2	—	610-222	2	—	—
YT175J/K Tri-Moto	82-83	2	611-229	610-234	2	—	610-234J
YFM200N Moto 4	1985	2	611-229	610-234	2	—	610-234J
YFM200DX Moto 4	86-89	2	611-229	610-234	2	—	610-234J
YFS200U-P Blaster	88-02	2	611-229	610-261	2	—	—
YSF200R/S/T/V Blaster	03-06	2	610-120	610-127/2	2	—	610-127/2
YTM200K/L/N Tri-Moto	83-85	2	611-229	610-234	2	—	610-234J
YTM200E Tri-Moto	83-85	2	611-229	610-234	2	—	610-234J
YFM225S/T/U Moto-4	86-88	2	611-229	610-234	2	—	610-234J
YTM225DR Tri-Moto	85-86	2	611-229	610-234	2	—	610-234J
YTM225DX Tri-Moto	83-85	2	611-229	610-234	2	—	610-234J
YFB250D/E/F	92-94	2	611-229	611-220	2	—	611-220NS
Timberwolf							
YFB250G/H/J	95-97	2	611-220	611-220	2	611-220NS	611-220NS
YFB250FW	94-00	2	611-220	611-220	2	611-220NS	611-220NS
Timberwolf 4WD							
YFB250UH/UJ/UK	96-98	2	611-220	611-220	2	611-220NS	611-220NS
Timberwolf 2WD							
YFM250M/MC	2000	2	611-220	611-220	2	611-220NS	611-220NS
Beartracker							
YFM250W/A/B Moto-4	89-91	2	611-220	610-234	2	611-220NS	610-234J
YFM250BT/BV Bruin	05-06	2	610-120	—	2	—	—
YFM250B W-Z	07-10	2	610-120	VD-245	2	—	—

Brake Pads & Brake Shoes

Yamaha ATV

Model	Year	Qt	Kevlar Front	Kevlar Rear	Qt	Sintered Front	Sintered Rear
YFM250XHN/XHP	01-02	2	610-120	611-220	2	—	611-220NS
Beartracke Real Tree							
YFM250X Beartracker	1999	2	611-220	611-220	2	611-220NS	611-220NS
YFM250X Beartracker	00-04	2	610-120	611-220	2	—	611-220NS
YTZ250N/S Tri-Z	85-86	2	610-239	610-239	2		
YFM350ER Moto-4	87-88	2	611-229	610-234	2	—	610-234J
YFM350ER Moto-4	89-90	2	611-220	610-234	2	—	610-234J
YFM350ER Moto-4	92-95	2	611-220	610-234	2	—	610-234J
YFM350FAS Bruin 350	04-06	2	610-220	—	2	—	—
YFM350FAHS	2004	2	610-220	—	2	—	—
Bruin 350 Auto 4x4 Hardwood Camo							
YFM350FH Wolverine	1999	2	610-220	611-231	2	—	—
YFM350FW Big Bear	87-88	2	611-238	611-238	2	611-238NS	611-238NS
YFM350FW Big Bear	89-95	2	611-240	610-234	2	611-240NS	610-234J
YFM350FW Big Bear	96-97	2	611-240	611-231	2	611-240NS	—
YFM350FWB Big Bear	97-98	2	611-240	611-231	2	611-240NS	—
YFM350FWB Big Bear	1999	2	610-120	611-231	2	—	—
YFM350FX Wolverine	02-03	2	610-120	610-127/2	2	—	610-127/2J
YFM350R Raptor 350	05-09	2	610-127/2	610-127/2	2	610-127/2J	610-127/2J
YFM350RS Raptor SE	05-06	2	610-127/2	610-127/2	2	610-127/2J	610-127/2J
YFM350XT/XU Warrior	87-88	2	610-239	610-127/2	2	—	610-127/2J
YFM350X Warrior	89-01	2	610-120	610-127/2	2	—	610-127/2J
YFM350X Warrior	02-04	2	610-127/2	610-127/2	2	610-127/2J	610-127/2J
YFZ350T/U/W Banshee	87-89	2	610-239	610-127/2	2	—	610-127/2J
YFZ350A-N Banshee	90-01	2	610-120	610-127/2	2	—	610-127/2J
YFZ350P-V Banshee	02-06	2	610-127/2	610-127/2	2	610-127/2J	610-127/2J
YFM400AKodiak 2WD	00-01	2	610-120	610-266	2	—	—
YFM400AKodiak 2WD	03-04	2	610-120	—	2	—	—
YFM400FAH Kodiak	2000	2	610-120	610-266	2	—	—
4WD Hunter							
YFM400FAHN	2001	2	610-120	610-266	2	—	—
Kodiak 4WD Real Tree Hunter							
YFM400FAHR	2003	2	610-120	610-266	2	—	—
Kodiak 400 4x4 Camo Hardwood							
YFM400FAHS	2004	2	610-120	—	2	—	—
Kodiak 400 4x4 Camo Hardwood							
YFM400FAHT/FAHV	05-06	2	610-120	610-266	2	—	—
Kodiak 400 4WD Hunter							
YFM400FA Kodiak 4WD	00-02	2	610-120	610-266	2	—	—
YFM400FAR/FAS	2003	2	610-120	611-231	2	—	—
KODIAK 4WD							
YFM400FAS	2004	2	610-120	—	2	—	—
Kodiak 400 4x4							
YFM400FAT/FAV	05-06	2	610-120	610-266	2	—	—
Kodiak 400 4x4							
YFM400FHM	2001	2	610-120	611-231	2	—	—
Big Bear Buckamaster 4WD							
YFM400FHN	2002	2	610-120	611-231	2	—	—
Big BEar 4WD Real Tree X-Tra							
YFM400FHAP	2002	2	610-120	610-266	2	—	—
Kodiak 4WD Hunter							
YFM400FHP	2002	2	610-120	611-231	2	—	—
Big Bear 4WD Real Tree Hunter							
YFM400F Big Bear	00-04	2	610-120	611-231	2	—	—
YFM400FT/FV	05-06	2	610-120	—	2	—	—
Big Bear 400 4x4							
YFM400FWBL/FWBLC	1999	2	610-120	611-231	2	—	—
Kodiak 4WD							
YFM400FWE-FWK	93-98	2	611-240	611-231	2	611-240NS	—
Kodiak 4WD							
YFM400FWR	2003	2	610-120	611-231	2	—	—
Big Bear 4WD							
YFM400HN/HP	01-02	2	610-120	611-231	2	—	—
Big Bear 2WD Real Tree Hunter							
YFM400NM/NMC	2000	2	610-120	611-231	2	—	—
Big Bear 2WD							
YFM400N/P	01-02	2	610-120	611-231	2	—	—
Big Bear 400 2WD							
YFM400NR	2003	2	610-120	611-231	2	—	—
Big Bear 400 2WD							
YFM400S Big Bear 2WD	2004	2	610-120	611-231	2	—	—
YFM450F Kodiak 4WD	03-06	2	610-120	610-266	2	—	—

Yamaha ATV

Model	Year	Qt	Kevlar Front	Kevlar Rear	Qt	Sintered Front	Sintered Rear
YFM450FAH Kodiak	2003	2	610-120	610-266	2	—	—
450 Real Tree							
YFM450FAHS	2004	2	610-120	610-266	2	—	—
Kodiak 450 Auto 4x4 Hardwoods							
TFM450FAHT/FAHV	05-06	2	610-120	610-266	2	—	—
Kodiak 450 4WD Hunter							
YFM450FSET	2005	2	610-120	610-266	2	—	—
Kodiak 450 4WD Black Carbon							
YFM450FASEV	2006	2	610-120	610-266	2	—	—
Kodiak 450 4WD Special Edition							
YFM450FXV	2006	2	610-120	610-266	2	—	—
Wolverine 450 4x4 Sport							
YFZ450S/T	04-05	1	610-340 L	610-127/2	1	610-340J L	610-127/2J
		1	610-250 R	—	1	—	—
YFZ450V-Y	06-08	1	610-340 L	—	1	—	—
		1	610-250 R	—	1	—	—
YFZ450BB V-W	06-07	1	610-340 L	—	1	—	—
		1	610-250 R	—	1	—	—
YYFZ450LES	2004	1	610-340 L	610-127/2	1	—	610-127/2J
		1	610-250 R	—	1	—	—
YFZ450SET	2005	2	610-250	610-127/2	2	—	610-127/2J
Special Edition							
YFZ450SPV	2006	1	610-340 L	—	1	—	—
Special Edition		1	610-250 R	—	1	—	—
YFM600FWA Grizzly	98-00	2	610-127/2	610-231	2	610-127/2J	—
YFM600FWH	2000	2	610-127/2	610-231	2	610-127/2J	—
Grizzly Realtree							
YFM600FHN	2001	2	610-127/2	610-231	2	610-127/2J	—
Grizzly Realtree Hunter							
YFM600FM/FMC/FN	00-01	2	610-127/2	610-231	2	610-127/2J	—
Grizzly							
YFM660FP/FR/FS	02-04	2	610-127/2	—	2	610-127/2J	—
Grizzly 660							
YFM660FPS Grizzly	2002	2	610-127/2	—	2	610-127/2	—
YFM660FAHT	2005	2	610-127/2	—	2	610-127/2	—
Grizzly 660 Hunter							
YFM660FAHDV	2006	2	610-127/2	—	2	610-127/2	—
Grizzly 660Ducks Unlimited							
YFM660 FG W-X	07-08	2	610-127/2	—	2	610-127/2	—
Grizzly 660 Hunter							
YFM660FAHWT	2005	2	610-127/2	—	2	610-127/2	—
Grizzly 660 Hunter Wetland							
YFM660FH P-S	02-04	2	610-127/2	—	2	610-127/2	—
Grizzly 660 SE							
YFM660FAT/FAV	02-06	2	610-127/2	—	2	610-127/2	—
Grizzly 660							
YFM660FHP	2002	2	610-127/2	—	2	610-127/2	—
Grizzly 660 Hunter Edition							
YFM660FHRWL	2003	2	610-127/2	—	2	610-127/2	—
Grizzly Wetlands Hunter Edition							
YFM660FHRH	2003	2	610-127/2	—	2	610-127/2	—
Grizzly Realtree Hardwood Hunter							
YFM660FHS	2004	2	610-127/2	—	2	610-127/2	—
Grizzly 660 Hardwoods Hunter Camo							
YFM660FHSWL	2004	2	610-127/2	—	2	610-127/2	—
Grizzly 660 Auto 4x4 Wetland							
YFM660FLES Grizzly	2004	2	610-127/2	—	2	610-127/2	—
YFM660FRGY	2003	2	610-127/2	—	2	610-127/2	—
Grizzly 660 4x4 Metalic Titanium							
YFM660R Raptor 660R	01-02	2	610-127/2	610-127/2	2	610-127/2J	610-127/2J
YFM660R Raptor 660R	03-05	2	610-127/2	610-127/2	2	610-127/2J	610-127/2J
YFM660RPB	2002	2	610-127/2	610-127/2	2	610-127/2J	610-127/2J
Raptor 660R Limited Edition Black							
YFM660RLER	2003	2	610-127/2	610-127/2	2	610-127/2J	610-127/2J
Raptor 660R Limited Edition Black							
YFM660RLES	2004	2	610-127/2	610-127/2	2	610-127/2J	610-127/2J
Raptor 660R Limited Edition Black							
YFM660RS Raptor SE	2005	2	610-127/2	610-127/2	2	610-127/2J	610-127/2J
YFM700R V-X Raptor	06-09	1	610-340 L	—	1	—	—
		1	610-250 R	—	1	—	—
YFM700RSP V-W Raptor	06-07	1	610-340 L	—	1	—	—
		1	610-250 R	—	1	—	—

Yamaha Dual Sport & Offroad

Model	Year	Qt	Kevlar Front	Kevlar Rear	Qt	Sintered Front	Sintered Rear
DDT50U/W/A LC	88-90	1	611-229	611-229	1	—	—
PW50A-B Y-Zinger	90-12	1	611-224	611-224	1	—	—
TT-R50 V-B	06-12	1	611-134	611-134	1	—	—
YZ50G	1980	1	611-226	611-226	1	611-226NS	611-226NS
YZ60H/J/K	81-83	1	611-226	611-226	1	611-226NS	611-226NS
BW80S/T/U Big Wheel	86-88	1	611-226	611-226	1	611-226NS	611-226NS
BW80A Big Wheel	1990	1	611-226	611-226	1	611-226NS	611-226NS
DT80H/J	81-82	1	611-212	611-212	1	—	—
DT80K	1983	1	611-229	611-229	1	—	—
GT80A/B/C	74-76	1	611-212	611-212	1	—	—
GT80E/F/G	78-80	1	611-212	611-212	1	—	—
GTMX-80A/B/C/D/E/F	74-79	1	611-212	611-212	1	—	—
MX80G/H/J	80-82	1	611-212	611-212	1	—	—
PW80D-V Y-Zinger	92-06	1	611-226	611-229	1	611-226NS	—
TY80A/B Trials	74-75	1	611-226	611-212	1	611-226NS	—
YZ80A/B/C/D/E/F	74-79	1	611-226	611-212	1	611-226NS	—
YZ80G/H/J/K/L/N	80-85	1	611-226	611-226	1	611-226NS	611-226NS
YZ80S/T/U/W/A/B/D1	86-92	1	610-244	611-226	1	—	611-226NS
YZ80E1-N1	93-01	1	610-244	610-127	1	—	610-127J
YZ85P/R/S/T/V/W1	02-06	1	610-244	610-127	1	—	610-127J
TT-R90M/MC/N/P/R/S/T	00-05	1	611-226	611-229	1	611-226NS	—
TT-R90ER-EW	03-07	1	611-226	611-229	1	611-226NS	—
DT100A-J	74-82	1	611-212	611-212	1	—	—
DT100K	1983	1	611-229	611-229	1	—	—
MX100A/B	74-75	1	611-212	611-212	1	—	—
MX100F/G/H/J	79-81	1	611-212	611-212	1	—	—
MX100K	1983	1	611-229	611-229	1	—	—
RT100A-M	91-00	1	611-229	611-229	1	—	—
YZ100C/D	76-77	1	611-219	611-223	1	—	—
YZ100E/F/G/H	78-81	1	611-212	611-223	1	—	—
YZ100J/K	82-83	1	611-229	611-223	1	—	—
DT125A/B/C Enduro	74-76	1	611-223	611-223	1	—	—
DT125E/F/G/H Enduro	78-82	1	611-223	611-223	1	—	—
T125G/H	80-81	1	611-212	611-223	1	—	—
MX125A/B	74-75	1	611-223	611-223	1	—	—
MX125C	1976	1	611-219	611-223	1	—	—
TT-R125M/MC	2000	1	611-229	611-229	1	—	—
TT-R125N/P/R/S	01-04	1	610-244	611-229	1	—	—
TT-R125E S-Y	04-09	1	610-244	611-229	1	—	—
TT-R125LN-LV	01-06	1	610-244	611-229	1	—	—
TT-R125LE S-B	04-12	1	610-244	611-229	1	—	—
TT-R125LWM-LER	00-03	1	610-244	611-229	1	—	—
XT125J/K/KC	82-83	1	610-223	611-229	1	—	—
YZ125A/B	74-75	1	611-223	611-212	1	—	—
YZ125C/D/E/F/G/H/J/K	76-83	1	611-219	611-223	1	—	—
YZ125L	1984	1	611-234	611-223	1	—	—
YZ125N/S	85-86	1	610-241	611-233	1	—	—
YZ125T	1987	1	610-241	611-233	1	—	—
YZ125U	1988	1	610-241	611-239	1	—	—
YZ125W	1989	1	610-340	610-127	1	—	610-127J
YZ125A/B/D1/E1	90-93	1	610-340	610-432	1	—	—
YZ125F1/G1/H1/J1	94-97	1	610-340	610-432/2	1	—	—
YZ125K1/L1/M1/N1/P1	98-02	1	610-161	610-144	1	—	—
YZ125R/S1/T1/V/W1	03-07	1	610-161	VD-271JL	1	—	—
YZ125 X-B1	08-12	1	VD-280JL	VD-271JL		—	—
DT175A/B/C	74-76	1	611-223	611-223	1	—	—
DT175E/F/G/H	78-81	1	611-223	611-223	1	—	—
IT175D/E/F/G/H/J/K	77-83	1	611-219	611-223	1	—	—
MX175A/B	74-75	1	611-212	611-223	1	—	—
MX175F/G/H	79-81	1	611-212	611-223	1	—	—
TY175B/C Trials	75-76	1	611-212	611-223	1	—	—
RT180A/B	90-91	1	610-245	611-239	1	—	611-239NS
RT180D	1992	1	610-245	611-223	1	—	—
RT180E	1993	1	610-245	611-239	1	—	611-239NS
RT180G/H/J/K	95-98	1	610-245	611-239	1	—	611-239NS
BW200N/S Big Wheel	85-87	1	611-229	611-229	1	—	—
BW200ES/ET/EU	86-88	1	611-229	611-229	1	—	—
IT200L/N	84-85	1	611-233	611-233	1	—	—
IT200S	1986	1	610-241	611-233	1	—	—
TW200 Trailway	87-91	1	610-223	611-229	1	—	—
TW200D/DC-G/GC	92-95	1	611-239	611-239	1	611-239NS	611-239NS
TW200H/HC-L/LC	96-99	1	611-239	611-229	1	611-239NS	

Yamaha Dual Sport & Offroad

Model	Year	Qt	Kevlar Front	Kevlar Rear	Qt	Sintered Front	Sintered Rear
TW200 M/MC-A1/A1C	00-11	1	610-263	611-229	1	—	—
WR200RD	1992	1	610-340	610-340	1	—	—
XT200J/K/KC/Dual	82-83	1	610-223	611-229	1	—	—
TT225S/T	86-87	1	610-239	611-229	1	—	—
TT-R225L/LC-S/SC	99-04	1	610-239	611-239	1	—	611-239NS
XT225D/DC-M/MC	92-00	1	610-239	611-229	1	—	—
XT225N/NC-W/WC	01-07	1	610-263	611-229	1	—	—
TT-R230T/TC/V/VC	05-06	1	610-340	610-239	1	—	611-239NS
DT250A Enduro	1974	1	611-228	611-228	1	—	—
DT250B/C/D/E/F	75-79	1	611-220	611-228	1	—	—
IT250D/E/F/G	77-80	1	611-219	611-220	1	—	—
IT250H/J	81-82	1	611-219	611-228	1	—	—
IT250K	1983	1	611-226	611-228	1	—	—
TT250G/H/J	80-82	1	611-219	611-223	1	—	—
TT-R250L/LC-V/VC	99-06	1	610-340	610-432/2	1	—	—
TY250A Trials	1974	1	611-212	611-223	1	—	—
TY250C/D Trials	76-77	1	611-212	611-223	1	—	—
WR250ZB/ZD/ZE	91-93	1	610-340	610-340	1	—	—
WR250ZF/ZG/ZH/ZJ	94-97	1	610-340	610-432/2	1	—	—
WR250FN/FP	01-02	1	610-161	610-144	1	—	—
WR250F R-B	03-12	1	610-161	—	1	—	—
XT250G/H/J	80-82	1	611-223	611-223	1	—	—
XT250K/KC/L/LC Dual	83-84	1	611-223	611-223	1	—	—
YZ250A/B/C/D/E/F	74-79	1	611-219	611-220	1	—	—
YZ250G	1980	1	611-219	611-223	1	—	—
YZ250H	1981	1	611-226	611-228	1	—	—
YZ250J/K/L	82-84	1	611-234	611-223	1	—	—
YZ250N/S/T	85-87	1	610-241	611-223	1	—	—
YZ250U	1988	1	610-241	610-239	1	—	—
YZ250W	1989	1	610-340	610-127	1	—	—
YZ250A/B	90-91	1	610-340	610-432	1	—	—
YZ250B/D1/E1	92-93	1	610-340	610-432	1	—	—
YZ250F1/G1/H1/J1	94-97	1	610-340	610-432/2	1	—	—
YZ250M1/N1/P	98-02	1	610-161	610-144	1	—	—
YZ250R/S1/T1/V/W1	03-07	1	610-161	—	1	—	—
YZ250FN/FP	01-02	1	610-161	610-144	1	—	—
YZS250FR/FS/FT/FV	03-07	1	610-161	VD-271JL	1	—	—
YZ250F X-B	08-12	1	VD-280JL	VD-271JL	1	—	—
YZ250WRW	1989	1	610-340	610-127	1	—	610-127J
YZ250WRA	1990	1	610-340	610-432	1	—	—
BW350T/U	87-88	1	611-229	611-229	1	—	—
TT350S/T	86-87	1	610-241	611-223	1	—	—
TY350N/S Trial	85-86	1	611-233	611-212	1	—	—
XT350N/NC-A/AC Dual	85-90	1	610-239	611-223	1	—	—
XT350B/BC-M/MC Dual	91-00	1	610-239	611-239	1	—	610-239NS
DT400B/C/D/E	75-78	1	611-220	611-228	1	—	—
IT400C/D/E/F	76-79	1	611-219	611-220	1	—	—
MX400B	1975	1	611-219	611-220	1	—	—
WR400FK	1998	1	610-161	610-432/2	1	—	—
WR400FL/FM	99-00	1	610-161	610-144	1	—	—
YZ400FK	1998	1	610-161	610-432/2	1	—	—
YZ400FL	1999	1	610-161	610-144	1	—	—
IT425G	1980	1	611-219	611-220	1	—	—
WR426FN/FP	01-02	1	610-161	610-144	1	—	—
YZ426FM/FN/FP	00-02	1	610-161	610-144	1	—	—
WR450F R-A	03-11	1	610-161	—	1	—	—
YZ450F R-W	03-07	1	610-161	—	1	—	—
YZ450F X-B	08-12	1	VD-280JL	VD-271JL	1	—	—
IT465H/J	81-82	1	611-234	611-228	1	—	—
YZ465G	1980	1	611-234	611-220	1	—	—
YZ465H	1981	1	611-234	611-228	1	—	—
IT490K/L	83-84	1	611-234	611-228	1	—	—
YZ490J/K/L	82-84	1	611-234	611-228	1	—	—
YZ490N/S/T/U/W/A	85-90	1	610-241	611-228	1	—	—
WR500ZD/ZE	92-93	1	610-340	610-432	1	—	—
TT500C/D/E/F/G/H	76-81	1	611-219	611-220	1	—	—
XT500C-H Dual	76-81	1	611-220	611-228	1	—	—
XT500J/K Dual Sport	82-83	1	611-228	611-228	1	—	—
TT600K/L	83-84	1	610-234	611-223	1	610-234J	—
TT600N/S	85-86	1	610-239	611-223	1	—	—
XT600L/LC-W/WC Dual	84-89	1	610-235	611-228	1	—	—
XT600E Dual Sport	90-95	1	610-252	611-239	1	—	611-239NS

Racing Brake Pads

Vesrah Racing Brake Pads (for Street)

Vesrah **RJL** and **SRJL17** high performance racing pads offer superior stopping power without fade. Sintered metal pads produce increased braking performance with one touch finger braking. Used by Vesrah Suzuki Racing team in USA and many other professional road race teams.
Made in Japan.

Honda

Model	Year	Hi-Perf. Front RJL.	Super Racing Front SRJL17
CBR600F4 Hurricane	99-00	610-166RJ	610-166SRJ17
CBR600F4 (F4i) Hurricane	01-06	610-166/2RJ	610-166/2SRJ17
CBR600FR Rossi Champion	2002	610-166/2RJ	610-166/2SRJ17
CBR600RR	03-04	610-166/2RJ	610-166/2SRJ17
CBR600RR	05-12	610-170RJ	610-170SRJ17
RVF750R RC45	1994	610-154RJ	———
VFR750R RC30	1990	610-154RJ	———
CB900F (919)	02-06	610-154RJ	———
CBR900RR	93-95	610-154RJ	———
CBR900RR	96-97	610-154/2RJ	———
CBR900RR	98-99	610-166RJ	610-166SRJ17
CBR929RE	2001	610-166/2RJ	610-166/2SRJ17
CBR929RR	00-01	610-166/2RJ	610-166/2SRJ17
CBR954RR	02-03	610-166/2RJ	610-166/2SRJ17
CBR1000RR	04-11	610-170RJ	610-170SRJ17
RVT1000R RC51	00-06	610-166/2RJ	610-166/2SRJ17
VTR1000F Super Hawk	98-05	610-154/2RJ	———

Kawasaki

ZX600E1-E10 Ninja ZX-6	93-02	610-344RJ	610-344SRJ17
ZX600E11 ZZR600	2003	610-344RJ	610-344SRJ17
ZX600F1/F2/F3 Ninja ZX-6R	95-97	610-344RJ	610-344SRJ17
ZX600G1/G2 Ninja ZX-6R	98-99	610-349RJ	610-349SRJ17
ZX600J1/J2/J3 Ninja ZX-6R	00-02	610-349RJ	610-349SRJ17
ZX600J4/J6F/J7F ZZR600	05-08	610-349RJ	610-349SRJ17
ZX600K1 Ninja ZX-6RR	2003	610-354RJ	610-354SRJ17
ZX600M1 Ninja ZX-6RR	2004	610-354RJ	610-354SRJ17
ZX600N1/N6F Ninja ZX-6RR	05-06	610-354RJ	610-354SRJ17
ZX636B1/B2 Ninja ZX-6R	03-04	610-354RJ	610-354SRJ17
ZX636C1/C6F Ninja ZX-6R	05-06	610-354RJ	610-354SRJ17
EX650A6F Ninja 650R	2006	610-352RJ (LH)	———
		610-435RJ (RH)	———
EX650A7F Ninja 650R	2007	610-354RJ	610-354SRJ17
ZX750L1/L2/L3 Ninja ZX-7	93-95	610-344RJ	610-344SRJ17
ZX750N Ninja ZX-7RR	96-97	610-437RJ	———
ZX750P1-P8 Ninja ZX-7R	96-03	610-349RJ	610-349SRJ17
ZX900B1/B2/B3 Ninja ZX-9R	94-96	610-344RJ	610-344SRJ17
ZX900B4 Ninja ZX-9R	1997	610-349RJ	610-349SRJ17
ZX900C1/C2 Ninja ZX-9R	98-99	610-349RJ	610-349SRJ17
ZX900E1/E2 Ninja ZX-9R	00-01	610-349RJ	610-349SRJ17
ZX1000C1/C2 Ninja ZX-10R	04-05	610-354RJ	610-354SRJ17
ZX1000D6F Ninja ZX-10R	04-07	610-354RJ	610-354SRJ17
ZX1100C2-C4 Ninja ZX-11	91-93	610-344RJ	610-344SRJ17
ZX1100D1-D9 Ninja ZX-11	93-01	610-344RJ	610-344SRJ17
ZX1100E1/E2/E3 GPz1100	95-97	610-352RJ(LH)	———
		610-435RJ (RH)	———
ZX1100F1 GPz1100 ABS	1996	610-352RJ (LH)	———
		610-435RJ (RH)	———
ZR1200A1-A5 ZRX1200	01-05	610-349RJ	610-349SRJ17

Kawasaki

Model	Year	Hi-Perf. Front RJL.	Super Racing Front SRJL17
ZX1200A1/A2/ Ninja ZX-12R	00-01	610-349RJ	610-349SRJ17
ZX1200B1/B2 Ninja ZX-12R	02-03	610-349RJ	610-349SRJ17
ZX1200B3-B6F ZX-12R	04-06	610-354RJ	610-354SRJ17
ZX1200C1-C5 ZZR1200	02-05	610-344RJ	610-344SRJ17
ZX1400A6F Ninja ZX-14	2006	610-354RJ	610-354SRJ17

Suzuki

GSF600SY/SK1-SK3 Bandit	00-03	610-352RJ (LH)	———
		610-435RJ (RH)	———
GSX600F Katana	88-97		
GSX600FW-FK6 Katana	98-06	610-352RJ (LH)	———
		610-435RJ (RH)	———
GSX-R600WN/WP	92-93	610-344RJ	610-344SRJ17
GSX-R600V-K3	97-03	610-344RJ	610-344SRJ17
GSX-R600K4-L0	04-10	610-355RJ	———
DL650K4/K5/K6	04-06	610-352RJ (LH)	———
		610-435RJ (RH)	———
SV650X/Y/K1-L0	99-10	610-352RJ (LH)	———
		610-435RJ (RH)	———
SV650S X-L0	99-10	610-352RJ (LH)	———
		610-435RJ (RH)	———
GSX750FW-FK6 Katana	98-06	610-352RJ (LH)	———
		610-435RJ (RH)	———
GSX-R750T/V/W/X	96-99	610-349RJ	610-349SRJ17
GSX-R750Y/K1/K2/K3	00-03	610-344RJ	610-344SRJ17
GSX-R750K4/K5/K6/K7	04-07	610-355RJ	———
DL1000K2-K9 V-Storm	04-09	610-352RJ (LH)	———
		610-435RJ (RH)	———
GSX-R1000K1/K2	01-02	610-349RJ	610-349SRJ17
GSX-R1000K3	2003	610-354RJ	610-354SRJ17
GSX-R1000K4-L1	04-11	610-355RJ	———
SV1000K3/K4/K5/K6	03-06	610-344RJ	610-344SRJ17
SV1000SK3-K7	03-07	610-344RJ	610-344SRJ17
TL1000RW-RK3	98-03	610-349RJ	610-349SRJ17
TL1000SV/SW/SX/SY/SK1	97-01	610-344RJ	610-344SRJ17
GSX-R1100WP-WW	93-98	610-349RJ	610-349SRJ17
GSF1200SK1-SK5 Bandit	01-05	610-349RJ	610-349SRJ17
GSF1200SK6 Bandit	2006	610-344RJ	610-344SRJ17
GSX1300RX-RK6 Hayabusa	99-06	610-349RJ	610-349SRJ1

Yamaha

YZF600 K/KC-B/BC	98-12	610-248RJ	610-248SRJ17
YZF-R6L/LC-W/WC	99-08	610-248RJ	610-248SRJ17
YZF-R6SN/SNC Champion	2001	610-248RJ	610-248SRJ17
FZS1000N/NC/P/PC/R/RC FZ1	01-03	610-248RJ	610-248SRJ17
FZS1000S/SC/T/TC/V/VC FZ1	04-06	610-248RJ	610-248SRJ17
FZS1000SPR/SPRC	2003	610-248RJ	610-248SRJ17
YZF1000RJ/RJC	1997	610-248RJ	610-248SRJ17
YZF-R1L/LC-R/RC	98-03	610-248RJ	610-248SRJ17
YZF-R1S/SC-V/VC	04-06	———	———
YZF-R1SN/SNC Champion	2001	610-248RJ	610-248SRJ17
FJR1300R/RC/S/SC/T/TC	03-05	610-248RJ	610-248SRJ17
FJR1300AS/ASC/AT/ATC	04-05	610-248RJ	610-248SRJ17

High Performance Brake Calipers

Brembo 4 Piston Caliper w/2 Pin		610-262RJ	———
Brembo 4 Piston Caliper w/1 Pin		610-945RJ	610-945SRJ17
Brembo 4 Piston Caliper for Racing (P4.32/36A 20.6720)		610-969RJ	610-969SRJ17
Brembo 4 Piston Monoblock Caliper (P4.32/36 X1.017)		———	610-969/2SRJ17
Brembo 4 Piston Left 20.7850.11	02-06		610-986SRJ17
Brembo 4 Piston Right 20.7850.21	02-06		610-986SRJ17
Nissin 6 Piston Caliper		610-437RJ	———

331-001

850-050

Sunstar Disc Brake Rotors FOR HARLEY-DAVIDSON®

Stainless steel, high performance disc brake rotors. ***Made in Japan*** from the finest stainless steel with computer punched holes for heat and moisture dissipation. Light in weight, these "rust less" rotors are compatible with all disc pads, included sintered metal. The popularity of these rotors continue to increase due to the quality and superior performance. Sold each. Available for the following applications:

Order No. 331-001
Front Single for FL, FLH (73-80), FX, FXE, XL (1973 only)

Rear for FL, FLH, FX, FXE, FXEF and FXS (73-80)

Replaces OEM 41813-79, 41806-72B, and 41813-92. (Diameter 10")

Order No. 331-002
Front Dual Disc for FXE, FXEF, FXS (includes 77)
FXRS, FXRT, XLH, XLX, XLS.(78-83)
Replaces OEM 44137-79. (Diameter 10")

Order No. 331-003
Front Single Disc for FX, FXE, XL(74-77)
Replaces OEM 41807-74. (Diameter 11-1/2")

Order No. 331-004
Rear for FXE, FXEF, FXSB, FXWG, FXST, FXRS, FXRT, XL (81-85)
XLH, XLX, XLS, XR1000 (79-87)
Replaces OEM 41797-79. (Diameter 11-1/2")

Order No. 331-005
Front Single Disc for FXE, FXEF, FXSB, FXWG, FXRS,
XLH, XLS, XLX, XR1000 (84-87)

Front Dual Disc for FXRT, FXRP (84-87), FLTC, FLHTC.
Replaces OEM 44136-92. (Diameter 11-1/2")

Order No. 331-015
For (92-93) models, counterbored.
Replaces OEM 41791-92.

Nissin 6 Piston Brake Calipers

Nissin 6-Piston brake calipers feature high performance stopping power along with great braking control. These calipers fit 280mm - 320mm diameter disc rotors. Sold each. ***Made in Japan.*** Available in the following bolt hole centers:

90mm Mounting Hole Center Brake Calipers

Description	Order No.
Brake Caliper Right Side 90mm	850-050
Brake Caliper Left Side 90mm	850-051

Fits Kawasaki ZX-6R (98-99), ZX-7R (97-01), ZX9R (97-99)
Fits Suzuki GSX-R600 (98-99), GSX-R750 (88-99), RF900RR (94-97)
Fits Suzuki TL1000R (98-01), TL1000S (97-01)
Fits Suzuki GSF1200 Bandit (97-00) and GSX1300R Hayabusa (99-01)

40mm Mounting Hole Center Brake Calipers

Description	Order No.
Brake Caliper Right Side 40mm	850-055
Brake Caliper Left Side 40mm	850-056

40mm compact type fits models with Brembo calipers - Ducati.

Sunstar ATV Disc Brake Rotors

Sold each. ***Made in Japan.*** Available for the following Suzuki ATV's:

Suzuki

Model	Year	Front	Rear
LT250R Quadracer	87-92	331-006	331-007
LT500R Quadracer	87-90	331-008	331-009

NGK Resistor Covers

L B 05 E H P K

External appearance
- L: 90° Elbow type
- S: Straight
- X: 102° Elbow type
- V: 120° Elbow type (long)
- Y: 120° Elbow type (short)

Adaptable plug thread size
- B: 14mm ø thread
- D: 10 & 12mm ø thread
- Z: 10,12 & 14mm ø thread

Resistance
- 01: 1 KΩ
- 05: 5 KΩ
- 10: 10 KΩ

Adaptable plug terminal
- E: For terminal nut or integrated terminal
- F: For terminal stud

Accessory
- H: Connect type
- P: With Special Water-Proof Cover
- K: With Silicone Water-Proof Cover
- M: Rubber Sheathed
- F: For 5 mm ø high tension cord
- Y: With handle
- Z: Special shape

NGK Resistor Covers are to be used with the resistor type spark plugs. The covers are used to suppress the effect gained against radio frequency interference. Applications: motorcycles, snowmobiles, and general purpose engines.

Configuration (applicable plug thread diameter, body material) Unit: mm

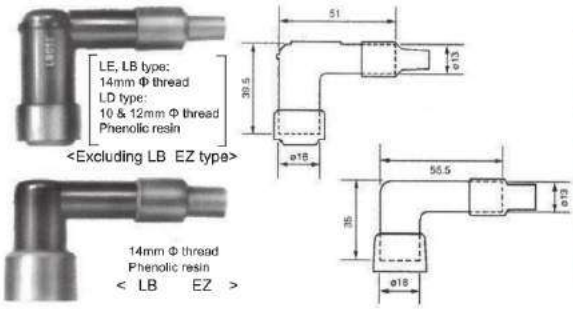

NGK Part Number	Order Number
LB01E	207-045
LB05E	207-046
LB01EP	207-048
LB05EP	207-005
LB05F	207-050
LB05FP	207-006
LB05EZ	207-051
LB05EZA	207-052
LB10E	207-055

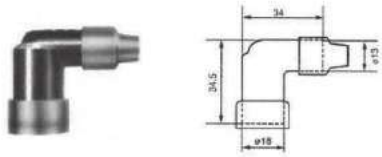

LZFH	207-010

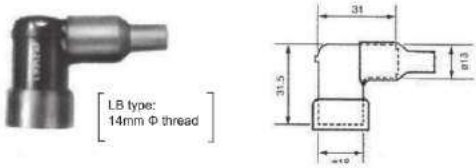

LB10EH	207-056

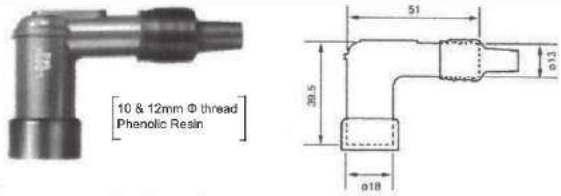

LD05F	207-060
LD05FP	207-061

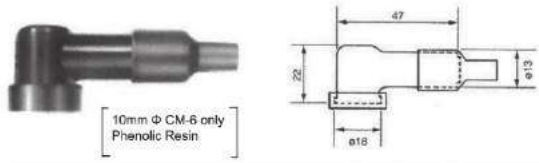

LC05EFK	207-058

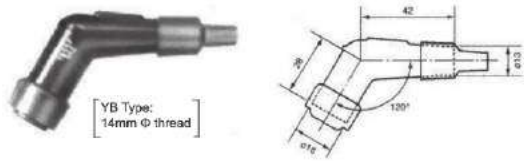

YB05F	207-080
YB05FP	207-030

NGK Resistor Covers

Configuration (applicable plug thread diameter, body material) Unit: mm

XB Type:
14mm Φ thread
XD Type:
10 &12 mm Φ thread

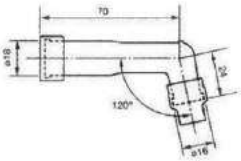

NGK Part Number	Order Number
XB05F	207-073
XB05FP	207-074
XD05F	207-077
XD05FP	207-025

VB Type:
14mm Φ thread
VD Type:
10 &12 mm Φ thread
Phenolic Resin

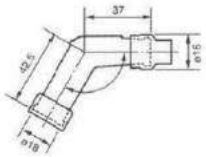

VB05E	207-065
VB05F	207-066
VB05FP	207-067
VD05F	207-070
VD05FP	207-020

SB Type:
14mm Φ thread
SD Type:
10 &12 mm Φ thread

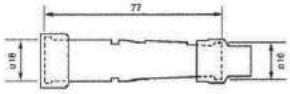

SB05E	207-039
SB05F	207-040
SB05FP	207-041
SD05F	207-042
SD05FP	207-015

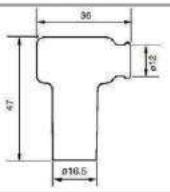

LB05EMH	207-047

14mm Φ thread
Rubber Sheathed
(Silicon)

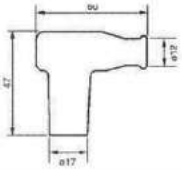

TB05EM (Red)	207-034

14mm Φ thread
Rubber Sheathed

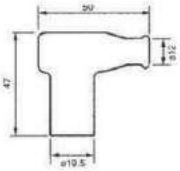

TB05EMA (Black)	207-035
TB05EMA (Green)	207-036
TB05EMD (Black)	207-037

14mm Φ thread
Rubber Sheathed
(Silicon)

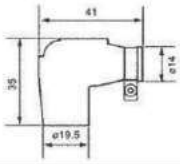

LBER (Blue)	207-008

14mm Φ thread
Rubber Sheathed (Silicon)

For racing spark plug
R5300A - only

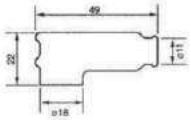

TRS1225	207-085

14mm Φ thread
Rubber Sheathed (Silicon)

For racing spark plug
R5300A - only

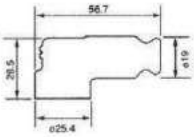

TRS1408F	207-086

NGK Spark Plugs

NGK Spark Plugs

Utilizing a wide variety of materials, from standard copper-core type to Iridium, NGK is the world's leader in spark plug engineering and technology. NGK Spark Plugs are original equipment on virtually every automotive, ATV, motorcycle, marine, scooter and small engine applications.

Standard & Resistor Spark Plugs

The workhorse, at the heart of smooth-running engines worldwide. Available in standard or resistor.

- OEM quality
- Triple-Gasket Sealing Process
- Consistent Performance
- Plug of choice in millons of Motorcycles, ATVs and Scooters

NGK No.	Thread Size	Reach	Hex	Qt	Order No.
B4	14mm	3/8"	13/16"	Box/10	206-010
B5HS	14mm	1/2"	13/16"	Box/10	206-015
B6ES	14mm	3/4"	13/16"	Box/4	206-017
B6HS	14mm	1/2"	13/16"	Box/4	206-019
B6L	14mm	7/16"	13/16"	Box/10	206-020
B6S	14mm	3/8"	13/16"	Box/10	206-021
B7ES	14mm	3/4"	13/16"	Box/10	206-023
B7HS	14mm	1/2"	13/16"	Box/10	206-025
B8ES	14mm	3/4"	13/16"	Box/4	206-032
B8HS	14mm	1/2"	13/16"	Box/10	206-035
B8S	14mm	3/8"	13/16"	Box/10	206-037
B9ES	14mm	3/4"	13/16"	Box/10	206-042
B9HS	14mm	1/2"	13/16"	Box/10	206-045
B10ES	14mm	3/4"	13/16"	Box/4	206-048
BM6A	14mm	3/8"	3/4"	Box/10	206-170
BP4HS	14mm	1/2"	13/16"	Box/10	206-059
BP5ES	14mm	3/4"	13/16"	Box/4	206-175
BP5HS	14mm	1/2"	13/16"	Box/10	206-052
BP6ES	14mm	3/4"	13/16"	Box/4	206-053
BP6HS	14mm	1/2"	13/16"	Box/4	206-054
BP7ES	14mm	3/4"	13/16"	Box/4	206-055
BP7HS	14mm	1/2"	13/16"	Box/4	206-056
BPR4HS	14mm	1/2"	13/16"	Box/10	206-198
BPR5ES-11	14mm	3/4"	13/16"	Box/4	206-060
BPR6ES	14mm	3/4"	13/16"	Box/4	206-061
BPR6ES-11	14mm	3/4"	13/16"	Box/4	206-560
BPR6HS	14mm	1/2"	13/16"	Box/10	206-062
BPR6HSA	14mm	1/2"	13/16"	Box/10	206-199
BPR7ES	14mm	3/4"	13/16"	Box/4	206-063
BPR7HS	14mm	1/2"	13/16"	Box/10	206-065
BPR8ES	14mm	3/4"	13/16"	Box/10	206-068
BPR8HS	14mm	1/2"	13/16"	Box/10	206-066
BR6HSA	14mm	1/2"	13/16"	Box/10	206-186
BR7ES	14mm	3/4"	13/16"	Box/10	206-067
BR7HS	14mm	1/2"	13/16"	Box/10	206-181
BR8ECM	14mm	3/4"	13/16"	Box/10	206-651
BR8ES	14mm	3/4"	13/16"	Box/10	206-072
BR8ES solid	14mm	3/4"	13/16"	Box/10	206-300

NGK No.	Thread Size	Reach	Hex	Qt	Order No.
BR8HS	14mm	1/2"	13/16"	Box/10	206-195
BR8HSA	14mm	1/2"	13/16"	Box/10	206-188
BR9ECM	14mm	3/4"	13/16"	Box/10	206-652
BR9ES	14mm	3/4"	13/16"	Box/10	206-074
BR9ES solid	14mm	3/4"	13/16"	Box/10	206-301
BR9HS	14mm	1/2"	13/16"	Box/10	206-182
BUHX	14mm	1/2"	13/16"	Box/10	206-594
BUR6EB-11	14mm	3/4"	13/16"	Box/10	206-079
C6HSA	10mm	1/2"	5/8"	Box/10	206-080
C7E	10mm	3/4	5/8"	Box/10	206-250
C7HSA	10mm	1/2"	5/8"	Box/10	206-081
C8E	10mm	3/4	5/8"	Box/10	206-193
C8HSA	10mm	1/2"	5/8"	Box/10	206-082
C9E	10mm	3/4"	5/8"	Box/10	206-194
CPREA-9	10mm	3/4"	5/8"	Box/10	206-660
CPR8EA-9	10mm	3/4"	5/8"	Box/10	206-659
CPR8EB-9	10mm	3/4"	5/8"	Box/10	206-662
CPR9EB-9	10mm	3/4"	5/8"	Box/10	206-663
CR10EK	10mm	3/4"	5/8"	Box/10	206-217
CR5HSA	10mm	1/2"	5/8"	Box/10	206-083
CR6HS	10mm	1/2"	5/8"	Box/10	206-084
CR6HSA	10mm	1/2"	5/8"	Box/10	206-085
CR7HS	10mm	1/2"	5/8"	Box/10	206-086
CR7E	10mm	3/4"	5/8"	Box/10	206-210
CR7EKB	10mm	3/4"	5/8"	Box/10	206-665
CR7HSA	10mm	1/2"	5/8"	Box/10	206-200
CR8E	10mm	3/4"	5/8"	Box/10	206-196
CR8EH9	10mm	3/4"	5/8"	Box/10	206-205
CR8EK	10mm	3/4"	5/8"	Box/10	206-215
CR8EKB	10mm	3/4"	5/8"	Box/10	206-667
CR9E	10mm	3/4"	5/8"	Box/10	206-197
CR9EH9	10mm	3/4"	5/8"	Box/10	206-088
CR9EK	10mm	3/4"	5/8"	Box/10	206-216
CR9EKB	10mm	3/4"	5/8"	Box/10	206-668
D7EA	12mm	3/4"	18mm	Box/10	206-090
D8EA	12mm	3/4"	18mm	Box/10	206-091
D8HA	12mm	1/2"	18mm	Box/10	206-093
D9EA	12mm	3/4"	18mm	Box/10	206-092
DCPR7E	12mm	3/4"	5/8"	Box/10	206-322
DCPR8EKC	12mm	3/4"	5/8"	Box/10	206-680
DIMR8A-10	10mm	3/4"	5/8"	Box/4	206-682
DP7EA-9	12mm	3/4"	18mm	Box/10	206-099
DP8EA-9	12mm	3/4"	18mm	Box/10	206-100
DPR7EA-9	12mm	3/4"	18mm	Box/10	206-103
DPR8EA-9	12mm	3/4"	18mm	Box/10	206-105
DPR8Z	12mm	3/4"	18mm	Box/10	206-273
DPR9EA-9	12mm	3/4"	18mm	Box/10	206-106
DPR9Z	12mm	3/4"	18mm	Box/10	206-190
DR7EA	12mm	3/4"	18mm	Box/10	206-320
DR7ES	12mm	3/4"	18mm	Box/10	206-108
DR8EA	12mm	3/4"	18mm	Box/10	206-119
DR8ES	12mm	3/4"	18mm	Box/10	206-109
DR8ES-L	12mm	3/4"	18mm	Box/10	206-110
DR9EA	12mm	3/4"	18mm	Box/10	206-120
FR9BI-11	14mm	3/4"	5/8"	Box/4	206-695

NGK Spark Plugs

Standard & Resistor Spark Plugs

NGK No.	Thread Size	Reach	Hex	Qt	Order No.
IMR9C-9H	10mm	3/4"	5/8"	Box/4	206-700
IMR9C-9HES	10mm	3/4"	5/8"	Box/4	206-701
IMR8E-9HES	10mm	3/4"	5/8"	Box/4	206-702
IMR9E-9HES	10mm	3/4"	5/8"	Box/4	206-703
JR10B	12mm	3/4"	18mm	Box/10	206-162
JR9B	12mm	3/4"	18mm	Box/10	206-157
JR9C	12mm	3/4"	18mm	Box/10	206-156
LKAR8A-9	12mm	26.5mm	9/16"	Box/10	206-710
LKAR8AI-9	12mm	26.5mm	9/16"	Box/4	206-711
LKAR8BI-9	12mm	26.5mm	9/16"	Box/4	206-712
LMAR7A-9	10mm	26.5mm	9/16"	Box/10	206-714
LMAR8D-J	10mm	26.5mm	9/16"	Box/10	206-715
LMAR9AI-8	10mm	26.5mm	9/16"	Box/4	206-716
LMAR9D-J	10mm	26.5mm	9/16"	Box/10	206-717
LMAR9E-J	10mm	26.5mm	9/16"	Box/10	206-718
LR8B	10mm	12.7mm	5/8"	Box/10	206-719
MAR8B-JDS	10mm	3/4"	9/16"	Box/10	206-730
MAR9A-J	10mm	3/4"	9/16"	Box/10	206-731
MAR10A-J	10mm	3/4"	9/16"	Box/10	206-732
SILMAR9A-9S	10mm	26.5mm	9/16"	Box/4	206-735
SILMAR10A-9S	10mm	26.5mm	9/16"	Box/4	206-736

Iridium IX Spark Plugs

Iridium IX Spark Plugs are the most technologically advanced high performance plugs available. Ultra-small diameter Iridium center electrode reduces voltage requirements and extends ignition system life. New metal shell plating has excellent anti-corrosion qualities

NGK No.	Thread Size	Reach	Hex	Qt	Order No.
BKR6EIX	14mm	3/4"	5/8"	Box/4	206-647
BKR6EIX-11	14mm	3/4"	5/8"	Box/4	206-649
BKR7EIX-11	14mm	3/4"	5/8"	Box/4	206-650
BPR5EIX-11	14mm	3/4"	13/16"	Box/4	206-325
BR9ECMIX	14mm	3/4"	13/16"	Box/4	206-642
BR10ECMIX	14mm	3/4"	13/16"	Box/4	206-643
BR10EIX	14mm	3/4"	13/16"	Box/4	206-341
BR10HIX	14mm	1/2"	13/16"	Box/4	206-335
BR7EIX	14mm	3/4"	13/16"	Box/4	206-338
BR7HIX	14mm	1/2"	13/16"	Box/4	206-332
BR8EIX	14mm	3/4"	13/16"	Box/4	206-339
BR8HIX	14mm	1/2"	13/16"	Box/4	206-333
BR9EIX	14mm	3/4"	13/16"	Box/4	206-340
C7HVX	10mm	1/2"	5/8"	Box/4	206-252
CPR7EAIX-9	10mm	3/4"	5/8"	Box/4	206-661
CR7EIX	10mm	3/4"	5/8"	Box/4	206-664
CR7HIX	10mm	1/2"	5/8"	Box/4	206-355
CR8EIA-10	10mm	3/4"	5/8"	Box/4	206-666
CR8HIX	10mm	1/2"	5/8"	Box/4	206-669
CR8EHIX-9	10mm	3/4"	5/8"	Box/4	206-345
CR8EIX	10mm	3/4"	5/8"	Box/4	206-349
CR9EHIX-9	10mm	3/4"	5/8"	Box/4	206-346
CR9EIX	10mm	3/4"	5/8"	Box/4	206-350
DCPR6EIX	12mm	3/4"	5/8"	Box/4	206-388
DCPR7EIX	12mm	3/4	18mm	Box/4	206-323
DCPR8EIX	12mm	3/4"	5/8"	Box/4	206-367
DCPR9EIX	12mm	3/4"	5/8"	Box/4	206-368
DPR8EIX-9	12mm	3/4	18mm	Box/4	206-270
DPR9EIX-9	12mm	3/4	18mm	Box/4	206-271
ER8EHIX	8mm	3/4"	1/2"	Box/4	206-690

Lazer Iridium IX Spark Plugs

NGK No.	Thread Size	Reach	Hex	Qt	Order No.
DCPR8EKP	12mm	3/4"	5/8"	Box/4	206-681
DR8EIX	12mm	3/4"	18mm	Box/4	206-360
IFR8H11	10mm	3/4"	5/8"	Box/4	206-380
IFR9H11	10mm	3/4"	5/8"	Box/4	206-381
IMR8C-9H	10mm	3/4"	5/8"	Box/4	206-385
LKAR9BI-9	12mm	26.5mm	9/16"	Box/4	206-713

G-Type Racing Spark Plugs

Nickel alloy fine wire electrode.

NGK No.	Thread Size	Reach	Hex	Qt	Order No.
B10EG	14mm	3/4"	13/16"	Box/4	206-046
B8EG	14mm	3/4"	13/16"	Box/4	206-030
B9EG	14mm	3/4"	13/16"	Box/4	206-040
BR10EG	14mm	3/4"	13/16"	Box/4	206-076
BR8EG	14mm	3/4"	13/16"	Box/4	206-070
BR9EG	14mm	3/4"	13/16"	Box/4	206-073
R5184-10	14mm	3/4"	13/16"	Box/4	206-232
R6254E-105	14mm	3/4"	13/16"	Box/4	206-225
R6254K-105	14mm	3/4"	13/16"	Box/4	206-226
R7376-10	14mm	3/4"	13/16"	Box/4	206-227

G-Type Racing Spark Plugs

Nickel alloy fine wire electrode.

NGK No.	Thread Size	Reach	Hex	Qt	Order No.
B105EGV	14mm	3/4"	13/16"	Box/4	206-316
B10EGV	14mm	3/4"	13/16"	Box/4	206-047
B11EGV	14mm	3/4"	13/16"	Box/4	206-645
B8EGV	14mm	3/4"	13/16"	Box/4	206-031
B95EGV	14mm	3/4"	13/16"	Box/4	206-315
B9EGV	14mm	3/4"	13/16"	Box/4	206-041
BKR6E-11	14mm	3/4"	5/8"	Box/4	206-646

NGK Spark Plug Indexing Washer Kit

Kits include 3 different thicknesses. (total 15pcs.)

10mm	207-200
12mm	207-201
14mm	207-202

NGK Master Spark Plug Application catalog available.

Order No. 950-990

Ignition Products

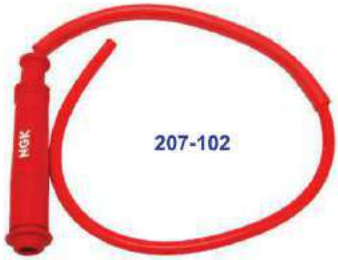

207-102

207-101

618-650

NGK Premium Quality Racing Cables

Available in straight or 90 ° resistor covers. Sold each.

- Water Resistant, rugged silicone insulation
- High Output stranded copper wire
- 5k ohm ceramic resistor cover for excellent defense against RFI (radio frequency interference)

90 ∫ Resistor Covers

Cap Type	Wire Length	Order No.
Removable	50cm (20")	207-101
Removable	100cm (39")	207-104
Solid	50cm (20")	207-103
Solid	100cm (39")	207-105

Straight Resistor Covers

Removable	50cm (20")	207-100
Solid	50cm (20")	207-102

Nology Ignition Wire

Sold 1 foot length.

Description	Nology No.	Order No.
7mm Red Silicone Secondary Wire	S.I.W.-R	618-650
7mm Black Silicone Secondary Wire	S.I.W.-B	618-651

618-633

NGK Inline Wire Connector

Made of high-impact plastic, this handy unit will solve all wire connection problems. Simply insert lead from ignition coil in one end, the new wire lead in other end and screw the two pieces for a watertight connection.

Order No. 207-120

Nology Connector Accessories

1K Ohm 90 ° Coil Connector (big red body only)	CS-1	618-631
1K Ohm in-line Secondary Wire Splice	CS-3	618-633

Nology Hot Wires

Hot Wires are engineered with a unique built-in capacitor that allows energy from the ignition coil to accumulate (stored) until the voltage can be released as an ultra-short, ultra-hot spark. Combustion is faster and more complete, resulting in increased horsepower and a more complete burn. Hot Wires are compatible with all aftermarket or stock ignition systems. Electronic ignitions are preferred but satisfactory results are achieved with point ignition when the points and condenser are in perfect working order. Each Hot Wire includes a 23" or 30" black silicone Hot Wire with grounding strap, 90 degree or 180 degree (straight) spark plug cap, in-line wire connector and heat shrink tubing. Sold each. **Note:** Requires non-resistor spark plugs.

23" Length Hot Wires, 7mm

Description	Nology No.	Order No.
90 Degree Plug Boot	HW-MC-90-23B	618-600
90 Degree Plug Boot (use with Karts)	HW-GK-90-23	618-610
180 Degree Plug Boot	HW-MC-180-23B	618-601

30" Length Hot Wires, 7mm

Description	Nology No.	Order No.
90 Degree Plug Boot	HW-MC-90-30B	618-602
180 Degree Plug Boot	HW-MC-180-30B	618-603

Nology Hot Wires - Model Specific Applications

Available in kits for applications listed.

Ducati

Model	Year	Color	Nology No.	Order No.
851 Strada	89-02	Red	012 042 401	618-439
916	93-98	Red	012 042 401	618-439
996	98-01	Red	012 042 401	618-439

Honda

VF750C V45 Magna	82-83	Black	012 064 302	618-449
VF750F V45 Interceptor	83-84	Black	012 064 302	618-449
VF750S V45 Sabre	82-83	Black	012 064 302	618-449
VFR1000F Interceptor	1984	Black	012 064 302	618-449
VFR1000R	85-86	Black	012 064 302	618-449
VF1100C V65 Magna	83-86	Black	012 064 302	618-449
VF1100S V65 Sabre	82-83	Black	012 064 302	618-449

Suzuki

SV650X/Y/K1/K2	99-02	Red	012 112 021	618-462
SV650SX/SY/SK1/SK2	99-02	Red	012 112 021	618-462

Yamaha

WR400F/YZ400F(S.O.T.)	1999	Red	012 131 001	618-469
FZ750	85-88	Black	012 134 002	618-471
FZR750RT/RU	87-88	Black	012 134 002	618-471

Nology Pro Fire Compact Ignition Coils

Pro Fire ignition coils utilize advanced technology to supply the energy needed for trouble-free high performance and high rpm operation. They are designed to have the quickest rise time along with substantial energy reserves. Spark voltage is in excess of 45,000 volts over the entire rpm range. Pro Fire coils come in single or dual high tension towers and are available in 0.3 ohm, 0.6 ohm, 1.5 ohm and 3.0 ohm. Coil connectors and boot are included. Sold each.

Note: To determine which Nology ignition coil to use, measure the primary winding resistance of your stock ignition coil. Round down to the nearest whole ohm.

0.5 ohm and 0.6 ohm primary resistance ignition coils are for C.D.I. type ignitions found on late model ATV, Dual Sport, MX. and Offroad.

Note: Do not use Nology Ignition Coils on point type ignitions or on the following models: Honda VFR, CB, CBX; Kawasaki ZX10, GPZ, KZ1000J, Z1-900; Suzuki GSXR (early oil cooled), GS; Yamaha FJ1100/1200 and VMX12 V-Max.

Description	Ohms	Nology No.	Order No.
Single Secondary outlet	3.0 primary	PFC-30-S	618-510
	0.6 primary (C.D.I.)	PFC-06-S	618-512
	0.3 primary (C.D.I.)	PFC-03-S	618-514
Dual Secondary outlet	3.0 primary	PFC-30-D	618-511
	0.6 primary (C.D.I.)	PFC-06-D	618-513
	0.3 primary (C.D.I.)	PFC-03-D	618-515

618-769

Dyna Ignition Coil Kits for Yamaha

These high tech ignition coils for Yamaha models listed provide maximum performance, producing spark voltage in excess of 30,000 volts. Sold as a kit.

Yamaha

Model	Year	Dyna No.	Order No.
YXR450 Rhino Side x Side	06-07	DCK7-2	618-769
YXR660 Rhino Side x Side	04-07	DCK7-2	618-769
XVS1100 V-Star 1100	05-08	DCK7-7	618-770

Ignition Coils

618-981

Dyna Mini Series Coils

Advanced magnetic core technology delivers high output in one of the smallest packages available. These coils are designed for use with the Dyna 2000 and 3000 series ignitions, factory installed electronics, or other aftermarket ignitions that employ dwell control.

Ohms	Qt	Use with Ignition	Output	Dyna No.	Order No.
3.0	2	Dyna 2000HD	Dual	DC1-2	618-980
		Dyna 2000i/D2Ki	Dual	DC1-2	618-980
		Dyna S HD	Dual	DC1-2	618-980
		Stock/Dyna S	Dual	DC1-2	618-980
3.0	1	Stock	Dual	DC1-3	618-981
3.0	2	Dyna 2000HD	Single	DC3-2	618-982
		Dyna 2000i/D2Ki	Single	DC3-2	618-982
		Dyna S HD	Single	DC3-2	618-982
		Stock/Dyna S	Single	DC3-2	618-982
3.0	1	Stock	Single	DC3-3	618-983

Dyna Twin Fire Mini Coil

This mini coil will fit under the tank on most XL and FLH models as well as in the stock location on the side of the motor for FXR models or rear of the motor for Dyna and Softail models.

Ohms	Qt	Use with Ignition	Output	Dyna No.	Order No.
3.0	1	Dyna 2000HD Dyna 2000i/D2Ki	Twin Fire II	DC6-5	618-984

Dynatek "Dyna" Ignition Wires

Dynatek "Dyna" wires are made from high grade, silicon jacketed, high tension cable. All wires are supplied with spark plug boot and loose coil terminals. Dyna wires are available in solid copper core and graphite suppressor. Use Dyna solid core wires where electrical interference is not an issue. Use Dyna suppressor wires for applications with electronic advance ignitions or other sensitive electronic equipment. Both wire types ensure maximum energy transfer.

Note: DW200, DW300, DW600, and DW800 wire sets include parts for 4-cylinder models. DW1100 and DW1200 include parts for 2-cylinder models. Sold in sets in different colors.

Description	Color	Dyna No.	Order No.
7mm Copper Core	Black	DW-200	618-781
7mm Copper Core	Red	DW-300	618-782
7mm Graphite Suppresor	Black	DW-600	618-784
7mm Graphite Suppresor	Grey	DW-800	618-786
7mm Graphite Suppresor	Black	DW-1100	618-787
8mm Graphite Suppresor	Grey	DW-1200	618-788

Dyna Ignition Coils

Dyna Ignition coils are high tech, top quality coils designed for maximum performance. They produce spark voltages in excess of 30,000 volts and spark energies second to none. Dyna coils are available in a wide variety of resistances and output configurations to allow easy replacement of stock coils. Dyna coils work with factory electronic ignitions, points and aftermarket ignitions. Before selecting a coil, check the coil primary resistance requirements as specified by the manufacturer of the ignition being used. All Dyna coils are sold in pairs unless otherwise noted.

Ohms	Qt	Use with Ignition	Output	Dyna No.	Order No.
0.7	2	Dyna 4000	Dual	DC9-1	618-766
1.5	2	Dyna "S" HD	Dual	DC2-1	618-751
1.5	2	Dyna "S" BMW	Dual	DC2-1	618-751
2.2	2	Dyna 2000/4	Dual	DC4-1	618-753
2.2	2	Stock	Dual	DC4-1	618-753
3.0	2	Dyna 2000 HD	Single	DC3-1	618-752
		Dyna 2000i/D2KI	Single	DC3-1	618-752
		Dyna "S" HD	Single	DC3-1	618-752
3.0	2	Dyna 2000 HD	Dual	DC1-1	618-750
		Dyna 2000i/D2KI	Dual	DC1-1	618-750
		Dyna "S" HD	Dual	DC1-1	618-750
		Stock/Dyna "S"	Dual	DC1-1	618-750
3.0	1	Dyna 200HD	Dual	DC6-1	618-755
		Dyna 200i/D2KI	Dual	DC6-1	618-755
		Dyna "S" HD	Dual	DC6-1	618-755
5.0	2	Dyna "S"	Single	DC10-1	618-763
5.0	2	Dyna "S" HD	Dual	DC8-1	618-760
Stock (point model)			Dual	DC8-1	618-760
5.0	1	Dyna "S" HD	Dual	DC7-1	618-759
Stock point model HD			Dual	DC7-1	618-759

618-756

Dyna Twin Fire Ignition Coils

The Dyna Twin Fire ignition coils are the newest standard for performance and packaging efficiency for single fire installations. Compact size fits easily under stock covers. Over 40,000 volts per output. Accepts 7 to 8.8mm wires.

Ohms	Qt	Use with Ignition	Output	Dyna No.	Order No.
3.0	1	Dyna 2000	dual, high location	DC6-2	618-756
3.0	1	Dyna 2000	dual, low location	DC6-3	618-757
3.0	1	Dyna 2000HD	single fire II	DC6-4	618-758
Dyna 2000i/D2Ki			single fire II	DC6-4	618-758
0.7	1	Dyna 4000	four tower, twin fire coil	DC9-2	618-767

Ignition Coil for Kawasaki & Suzuki

Point type ignition coil for the Kawasaki and Suzuki models listed.
Note: Ignition Coils are not marked 1 & 4 or 2 & 3. Sold each.

Order No. 618-110

Ignition Coil Specifications

Low Tension Wires: 39cm (15") long with female spade connectors at coil and male bullet connectors on the other end.

Spark Plug Wires (HT Leads): 57.5cm (24") long with a 30cm (12") long protective sheath.

Center to Center Mounting Distance: 90mm between mounting screw holes.

Kawasaki

Model	Year
KZ400A1/A2	77-78
KZ400B1/B2	78-79
KZ400C1	1978
KZ400/D/D3/D3	74-77
KZ400H1 LTD	1979
KZ400S/S2/S3 Special	75-77
KZ440A1	1980
KZ440B1	1980
KZ440D1	1980
KZ650B1/B2/B2A/B3	77-79
KZ650C1/C2/C3 Custom	77-79
KZ650D1/D2 SR	78-79
KZ650E1 LTD	1980
KZ650F1	1980
KZ750B1/B2/B3/B4 (2-cylinder)	76-79
KZ750G1 LTD (2-cylinder)	1980
KZ900A4/A5	76-77
KZ900B1 LTD	1976

Kawasaki

Model	Year
Z1/A/B-900	73-75
KZ1000A1/A2	77-78
KZ1000B1/B2/B3 LTD	77-79
KZ1000C1/C1A/C2 Police	78-79

Suzuki

GS550B/C/EC/N	77-79
GS550LN	1979
GS750B/C/EC/N/EN	77-79
GS750LN	1979
GS850GN	1979
GS1000C/EC/N/EN	78-79
GS1000LN	1979
GS1000SN	1979

Ignition Coil Set for Kawasaki H2-750

These OEM style replica high tension coils fit Kawasaki's legendary H2-750 2-stroke triple, 1972-1975. Sold as a complete set of 3 coils, wires, & caps. Kawasaki OEM reference: 21121-064.

Order No. 618-112

Universal 12 Volt Ignition Coil

This Universal 12 volt Ignition Coil comes complete with mounting Bracket. 12 volts, 5.0 ohms.

Order No. 618-114

Ignition Products

Dyna 3000 Digital Performance Ignition Module for Cruisers

The Dyna 3000 combines state of the art microprocessor technology. Direct mounting on factory locations so you can maximize engine performance by setting ignition timing to fit your specifications.

Features include:

- 10 advance curves for Honda, 8 Advance Curves for Kaw/Suz/Yam
- 9 Selectable Rev Limits for Honda (increased rev limits over stock)
- 8 Selectable Rev Limits for Kaw/Suz/Yam (increased rev limits over stock)
- STATUS LED:
  A) Indicates power-up, (all models listed)
  B) Indicates pick-ups (all models listed)
  C) Indicates TPS (throttle position sensor) operation (applicable models only)
  D) Indicates MAP sensor operation (applicable models only)
  E) Retard Function (applicable models only)
- Easier Starting
- Plug and ride, 5 minute installation (on most models)
- Uses all Factory Sensors
- Mounts Directly to Factory Location
- Use OEM Ignition Coils or Dyna Ignition Coils
- Reverse Battery Protection

Available for the following models:

Honda

Application	Year	Dyna No.	Order No.
VT750C Shadow	98-00	D3K1-3	618-677
VT750CD Shadow Deluxe	98-01	D3K1-3	618-677
VT750CD2 Shadow Deluxe	98-01	D3K1-3	618-677
VT1100C2 Shadow 1100 A.C.E.	97-00	D3K1-2	618-676
VT1100C3 Shadow Aero	98-00	D3K1-2	618-676
VT1100D2 Shadow 1100 A.C.E.	1999	D3K1-2	618-676
GL1500C Valkyrie	97-00	D3K1-1	618-675
GL1500C Valkyrie	2003	D3K1-1	618-675
GL1500CD Valkyrie	01-03	D3K1-1	618-675
GL1500CF Valkyrie Interstate	99-01	D3K1-1	618-675
GL1500CT Valkyrie Tourer	97-00	D3K1-1	618-675

Kawasaki

VN800C1/C2 Vulcan Drifter	99-00	D3K2-1	618-681
VN800E1-E6F Vulcan Drifter	01-06	D3K2-1	618-681
VN1500E2-E7 Vulcan Classic	99-04	D3K2-2	618-682
VN1500G1/G1A/G2 Vulcan Nomad	99-00	D3K2-2	618-682

Suzuki

VS1400GL Intruder	90-95	D3K3-1	618-685
VS1400GL Intruder	96-07	D3K3-2	618-686
VL1500W Intruder 1500LC	1998	D3K3-3	618-687
VL1500X-K4 Intruder 1500LC	99-04	D3K3-4	618-688

Yamaha

Application	Year	Dyna No.	Order No.
XVS650 V-Star	98-02	D3K7-1	618-691
XVS1100 V-Star	99-03	D3K7-2	618-692
XVS1100 V-Star (49 state only)	04-05	D3K7-2	618-692
XVS1100 V-Star	05-08	D3K7-8	618-697
XVZ1300A Royal Star Boulevard	96-01	D3K7-4	618-694
XVZ1300T Royal Star Venture	99-08	D3K7-5	618-695
VMX12 V-Max	90-07	D3K7-6	618-696
XV1600 Road Star	99-03	D3K7-3	618-693
XV1700 Road Star	04-07	D3K7-3	618-693

Boyer Bransden Electronic Ignition

Boyer Bransden ignitions are fully electronic "breakerless" kits and are compatible with positive or negative ground systems. Boyer ignitions are capable of reliable operation up to 10,0000 RPM on most 4-stroke applications. "Reliable As Rock" reputation and virtually maintenance free when installed on a fully functional charging system. Available for the following applications:

Application	Mfg. No.	Order No.
BSA/Triumph Triple 3-Cyl.	JRC3577	618-902
BSA/Triumph Twin 2-Cyl. (Unit Type Twin)	JRC3576	618-901
BSA/Triumph Single (Unit Type Single)	JRC3578	618-903
Norton Twin (Atlas, P11, N15, Commando)	JRC3575	618-900
Yamaha XS650 Twin (70-78)	JRC35103	618-904

Dyna 2000 Digital Performance Ignition for Sportbikes

The Dyna 2000 Digital Performance Ignition represents a break through in motorcycle ignition flexibility. The Dyna 2000 system consists of a state-of-the art microprocessor controlled ignition module along with an adjustable Dyna dual sensor crank trigger. For the first time you can actually set the ignition timing to what you want to maximize engine performance. A number of different advance modes and a broad range rev limiter let you tailor the ignition to your needs.

Note: Sudco part numbers with an asterisk* come with compatible Dyna Ignition coils.

Honda

Application	Year	Dyna No.	Order No.
CBR600F2 Hurricane	91-94	DDK1-7	618-831
CBR600F3 Hurricane	95-97	DDK1-8	618-832
CB750/900/1100 DOHC	79-83	DDK1-5	618-860
CB750/900/1100 DOHC (with coils*)	79-83	DDK1-5C	618-861*
CBR900RR	93-99	DDK1-9	618-833
CBR1100XX Blackbird	97-98	DDK1-10	618-857

Kawasaki

KZ550D1 GPZ (with coils*)	1981	DDK2-3C	618-869*
ZX600G1/G2 Ninja ZX-6R	98-99	DDK2-11	618-875
ZX600J1/J2 Ninja ZX-6R	00-01	DDK2-11	618-875
KZ650B/C/E/F	77-80	DDK2-2	618-867
KZ650B/C/E/F (with coils*)	77-80	DDK2-2C	618-856*
KZ750/ZX750	80-84	DDK2-2	618-867
KZ750/ZX750 (with coils*)	80-84	DDK2-2C	618-856*
ZX750 Ninja ZX7/ZX-7R/ZX-7RR	91-97	DDK2-7	618-837
Z1-900/KZ900	73-76	DDK2-1	618-865
Z1-900/KZ900 (with coils*)	73-76	DDK2-1C	618-866*
ZX900A1/A2 Ninja 900R	84-85	DDK2-4	618-834
ZX900B Ninja ZX-9R	94-97	DDK2-7	618-837
ZX900C/E/F Ninja ZX-9R (with coils*)	98-03	DDK2-12C	618-874*
KZ1000/1100	77-85	DDK2-1	618-865
KZ1000/1100 (with coils*)	77-85	DDK2-1C	618-866*
KZ1100 GPz modified	81-84	DDK2-1	618-865
KZ1100 GPz modified (with coils*)	81-84	DDK2-1C	618-866*
ZX1000A1/A2 Ninja 1000R	86-87	DDK2-4	618-834
ZX1000B1/B2/B3 Ninja ZX-10	88-90	DDK2-4	618-834
ZX1100C/D Ninja ZX-11	90-01	DDK2-4	618-834

Suzuki

GS550/750/850	77-81	DSK3-2	618-870
GSX600F/GSX750F Katana	88-95	DDK3-3	618-840
RF600RR/RS/RT	94-96	DDK3-4	618-841
RF900RR/RS/RZS/RT/RV	94-97	DDK3-4	618-841
GSX-R750G/H/J/K/L/M/N	86-92	DDK3-3	618-840
GSX-R750WP/WR/WS	93-95	DDK3-4	618-841

Suzuki

Application	Year	Dyna No.	Order No.
GS1000/1100/1150	77-85	DSK3-2	618-870
GS1000/1100/1150 (with coils*)	77-85	DSK3-2C	618-871*
GSX1100F Katana	88-93	DDK3-3	618-840
GSX-R1100G/H/J/K/L/M/N	86-92	DDK3-3	618-840
GSX-R1100WP-WV	93-97	DDK3-4	618-841
GSF1200SV-SK5 Bandit	97-05	DDK3-3	618-840
GSF1200SAV Bandit	1997	DDK3-3	618-840

Yamaha

FJ1100/1200	84-92	DDK7-1	618-845

Dyna-S Electronic Ignition

The Dyna-S is a complete self-contained electronic ignition built with the latest state-of-the-art engineering. The Dyna S is completely housed behind the ignition cover and uses a magnetic rotor with the original spark advancer, so the factory advance curve is maintained. Tidy, no fuss installation. Recommended DYNA Ignition Coil is listed after Order No.

Ducati

Application	Year	Dyna No.	Order No.	Dyna Ign. Coil
750 Twins	72-74	DS4-1	618-727	618-763

Honda

CB350F/CB400F	72-77	DS1-1	618-720	618-760
CB500/550/750	69-78	DS1-2	618-721	618-750
GL1000	75-79	DS1-3	618-722	618-750

Kawasaki

KZ550/650/750 (4-cyl.)	ALL	DS2-2	618-724	618-750
Z1-900/KZ900 (4-cyl.)	73-76	DS2-1	618-723	618-750
KZ1000/1100 (4-cyl.)	77-85	DS2-1	618-723	618-750

Moto Guzzi

V35/V50/V65	ALL	DS5-1	618-728	618-763

Suzuki

GS550/1100	77-81	DS3-2	618-726	618-750
GS1000/1100	82-83	DS3-2	618-726	618-750

Ignition Products

Dyna FS Digital Performance Ignition

The Dyna FS ignition is used by winning pro racers worldwide. Get the most out of your modifications by tuning the ignition. The Dyna FS lets you customize and adjust power delivery to fit your riding style.
Dyna FS ignition is available in Programmable and Non-programmable. Sold each. Available for the following ATV's and motorcycles.

Honda

Model	Year	Dyna P/N	Order No.
XR50R/XR80R	ALL	DFS1-12	618-969
CR125R	2000	DFS1-1	618-908
CR125R	2001	DFS1-6P	618-963P
CR250R	2000	DFS1-2	618-909
TRX400EX Fourtrax 400EX	99-00	DFS1-10P	618-967P
TRX400EX Sportrax 400EX	01-04	DFS1-10P	618-967P
TRX400EX Sportrax 400EX	05-08	DFS1-14P	———
TRX450R	04-05	DFS1-13P	618-970P

Kawasaki

KX125	2000	DFS2-1P	618-910P
KFS400A KFX400	03-04	DFS2-11P	———
KVF650 Prairie 4x4	03-07	DFS2-13	618-949
KVF650 Brute Force 750 4x4	05-07	DFS2-15	———
KFX700 V-Force	03-07	DFS2-14	618-950
KVF700 Prairie	04-06	DFS2-13	618-949
KVF750 Brute Force 750 4x4i	05-07	DFS2-15	———

Polaris

Predator 500	03-04	DFS9-1P	618-943P
Predator 500	2005	DFS9-2P	———

Suzuki

RM125	2002	DFS3-7P	618-926P
LT-Z400K Quadsport	03-04	DFS3-9P	618-928P
LT-Z400K Quadsport	05-08	DFS3-12P	———
LT-V700F Twin Peaks	04-05	DFS3-11	———

Yamaha

YFM350R Raptor 350	04-12	DFS7-16	———
YFM350X Warrior	97-01	DFS7-9P	618-936P
YFZ350 Banshee	87-94	DFS7-8P	618-939P
YFZ350 Banshee	95-96	DFS7-7P	618-945P
YFZ350 Banshee	97-06	DFS7-6P	618-935P
YFZ450	04-09	DFS7-12P	618-942P
YFM660R Raptor 660R	2001	DFS7-10P	618-937P
YFM660R Raptor 660R	02-05	DFS7-11P	618-938P
YXR660 Rhino	04-07	DFS7-13	618-946
YFM700R Raptor 700R **New**	06-12	DFS7-21P	618-948P
YXR700 Rhino	08-12	DFS7-26	618-947

Programmable Ignition features:

(P listed after Dyna and Sudco part number)

- Programmable timing curves (4)
- Programmable rev limits
- Increased spark energy
- Improved throttle response
- Easier starting
- Tach Output
- Launch limiter
- Shift kill interrupt
- Data logging
- External curve selector switch
- Plug-in Module replacement - easy mounting
- Programmable RPM activated outputs (2), can be used for nitrous activation, shift light, auto shifter or boost control

Non-Programmable Ignition features:

(No P listed. Dyna and Sudco part numbers only)

- Improved timing curves
- Higher rev limits
- Removed reverse rev limit
- Overrides belt indicator for full performance at all times
- Increased spark energy
- Improved throttle response
- Easier starting
- Plug-in Module replacement - easy mounting

Dyna FS Programming Kit

The Dyna FS programing kit includes everything you need to reprogram Dyna FS programmable ignition. Easy to understand interface, simple saving, recalling and printing of curves and quick reprogramming of the ignition make this the most user friendly programmable ignition software available. The Dyna kit includes the software to reprogram all available Dyna FS programmable Ignition models and the programming cable.
This kit is not recommended for inexperienced tuners.

Dyna FS Programming Kit	DFSPK-1	618-990

Dyna Shift Minder System

Ruggedly constructed and rigorously trade tested for bullet-proof reliability. The Dyna Shift Minder System consists of a shift light and a control module. Adjustable to any of the 64 different RPM settings with a 125 RPM increment between settings. This control module can also be used to activate other systems, such as an air shifter solenoid or nitrous injection system. Sold each.

Dynatek No.	Order No.
DSMS-4 (4-cylinder models.)	618-811
DSMS-2 (2-cylinder models)	618-810

Dyna RPM Limiter

Dyna Rev Limiters effectively prevent your engine's rpm from exceeding a per-determined limit that is totally user adjustable DRL-200/300 - A single high RPM limiter continuously adjustable from 6,000 RPM to 12,000 RPM. DRL-400 - A two stage launch RPM limiter and high RPM limiter which is clutch switch activated. Launch limit is adjustable from 3,000 RPM to 10,750 RPM and over rev limit is adjustable from 10,000 RPM to 13,750 RPM. Both ranges are adjustable in 250 RPM increments. All Dyna RPM Limiters carry a 1 year factory warranty. Sold each.

Description	Dynatek No.	Order No.
Inductive RPM Limiter (upgrades the DRL-200)	DRL-200/300	618-795
Magneto CDI RPM Limiter	DRL-300CDI	618-794
2 Stage Rev Limiter	DRL-400	618-796
2 Stage Rev Limiter H-D	DRL-400HD	618-797

Dyna Voltage Monitor

The Dyna Voltage Monitor is a necessity for any battery ignition vehicle which does not have a charging system. "Total Loss" ignition systems are typical of racing bikes and race cars that depend on the battery voltage only for proper operation. The Voltage Monitor will give a clear indication of battery condition with a quick glance at the three LED indicators. Sold each.

Dynatek No.	Order No.
DVM-1	618-801

PC Racing Engine Hour Meter

Automatically records and displays your engines accumulated run time, so oil changes, piston, rings, valves, spark plugs, etc. can be serviced at the correct maintenance schedule. The correct schedule saves costly engine damage from service neglect. Motominder can also save money from servicing too frequently. The smallest engine hour meter available (approximately 1" x 1.5") doesn't require additional mounting bracket and can be easily mounted by the peel and stick method to the frame or other convenient area. PC Racing is so confident that motominder is the most reliable engine hour meter available. It is backed by a 2-year manufacturer's replacement warranty.
Works with all Gas Engines.

PC Racing No.	Order No.
PCMM1	945-130

Handlebar Switches & Horns

721-710

721-711

950-280

950-281

Handlebar Switches

K&S offers a variety of universal handlebar switches, including D.O.T. approved for Dual Sport and Street/cruiser and switches for ATV/offroad use. See handlebar switch specifications for functions. Fits 7/8" handlebars. Sold each.

K&S Street Handlebar Switches-D.O.T. Approved for Street use (Specifications)

Turn Signal Right/Left	Headlight On-Off	Headlight Hi-Low	Headlight Passing	Horn	Kill	LED Indicator	Wire Length	Switch Width	DOT Approved	Order No.
Yes	Yes	Yes	Yes	Yes	No	No	25"	49mm	Yes	721-711
Yes	Yes	Yes	No	Yes	Yes	Yes	25"	45.5mm	Yes	721-710

K&S Universal Handlebar Switches-For Offroad use (Specifications)

Headlight On-Off	Headlight Hi-Low	Horn	Kill	Wires	Wire Length	Switch Width	Extra Terminals	DOT Approved	Order No.
Yes	Yes	No	Yes	6	18"	20.7mm	No	Not Required	950-278
Yes	No	No	No	2	16-1/2"	20mm	Yes	Not Required	950-280
				3	27-1/2"				
Yes	Yes	Yes	Yes	3	32"	43mm	Yes	Not Required	950-281
				6	27"				
No	No	No	No				Yes	Not Required	950-285

Notes:

OEM Reference 35020-HN1-000. TRX type switch. 950-281

OEM Reference 35150-KSC-671. 2 wire, direct plug type connection. Use for electric starter. 950-285

Economy Motorcycle Horns

Universal usage. Sold each.

Single Chrome, 12V/2.5 amp, 105 db, 7cm diameter	Order No. 950-270
Single Black, 12V/2.5 amp, 105 db, 7cm diameter	Order No. 950-271

Kill Buttons & Brake Light Switch

Replacement Kill Buttons

Direct plug-in into stock wiring harness. Sold each.

Honda Order No. 900-440

2 wire plug-in, male and female connector with round eyelet connector/green wire. CR80R/CR125R/CR250R/CR500R 2-stroke

Kawasaki Order No. 900-441

2 wire plug-in-male and female connectors KX60/KX80/KX85/KX100 2-stroke KX125/KDX200/KX250/KX500 2-stroke

Suzuki Order No. 900-442

2 wire plug-in, male connector and round eyelet connector RM80/RM85/RM125/RM250/RMX250 2-stroke

Yamaha Order No. 900-443

2 wire plug-in male and female connectors YZ80/YZ85/YZ125/YZ250/YZ400/YZ490 2-stroke

Brake Light Switch

Universal hydraulic brake light switch. Use with high performance master cylinder without integral brake light switch. (10mm)

Order No. 950-275

Racers Kill Switch

Normal Position: Open circuit. Activated: Tether pulled - circuit closed. Wire Length: 1st wire 24", 2nd wire 35". Tether kill switch. Sold each.

Order No. 900-444

Bulbs & Fuses, Turn Signals, Taillight & ATV Headlight

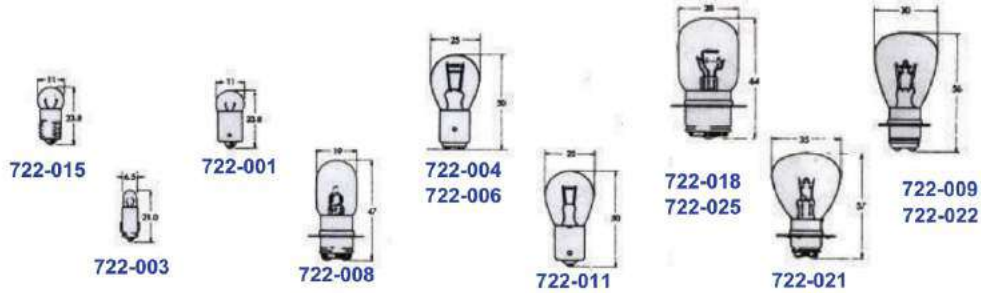

Instrument, Tail Light & Turn Signal Bulbs

Sold box/10.

Description	Voltage	Order No.
Instrument Bulb	6V A62	722-001
Instrument Bulb	6V A1262	722-003
Instrument Bulb	6V A213	722-015
Tail Light Bulb	6V A4813C	722-004
Tail Light Bulb	12V A4879	722-006
Turn Signal Bulb	6V A4513	722-011

Headlight Bulbs

Sold box/10.

Description	Voltage	Order No.
Headlight Bulb	12V A5676	722-021
Headlight Bulb	6V A7007	722-022
Headlight Bulb	6V A6867	722-025
Headlight Bulb	6V 13598	722-008
ATV Headlight. Bulb	6V 25/25	722-026
Headlight Bulb	12V A6982R	722-018
Headlight Bulb	12V A7025	722-009

Motion Pro D.O.T. Tailplate & Light

D.O.T. approved for use in all 50 states. Durable Lexon light assembly. Perfect for dual-sport conversions. 12-volt bulb included.
Made in the USA.
Order No. 950-387

Glass Tube Fuses

Available in 25mm and 30mm lengths.
Made in Japan. Sold pk/5.

25mm Length	Order No.
7 amp	723-001
10 amp	723-002
30mm Length	
7 amp	723-006
8 amp	723-010
30 amp	723-009

Universal Turn Signals

D.O.T. approved for USA and "E" European approved. Heavy duty flexible stem is suitable for Street, Dual Sport and Scooters. Mounting is universal with wiring to fit most models. Use them to make your offroad model street legal. Sold in pairs.

Order No. 721-700

California Gold Original Formula Carnauba Cleaner Wax

Original Formula Carnauba Cleaner Wax is designed to be the one-step plan for paint preservation. This special Carnauba Cleaner Wax is formulated to clean and protect in just one application. We used the same Brazilian #1 yellow carnauba that makes our Pure Carnauba Wax so special, and combine it with a light polish that will smooth minor flaws and make your paint snap. Carnauba Cleaner Wax is especially effective on fiberglass and gel coats. Available in long lasting, easy-to-apply liquid or paste. Sold in 16 oz. bottle.

Order No. 800-736

California Gold Natural Formula Pure Carnauba Wax

This is the final step on the path to a beautiful finish. Mothers Pure Carnauba Wax is made with the finest Brazilian #1 yellow carnauba for superior shine and protection. Natural Formula is non-abrasive, so use as much as your paint needs, as often as you like. You can also apply more than one coat to keep your efforts well protected. For unsurpassed shine, depth and protection, trust Mothers Ultimate Wax System.
Sold in 16 oz. bottle.

Order No. 800-737

California Gold Showtime Instant Detailer

Treat your paint to a Showtime sparkle that's wet and striking. Whether you want to clear a layer of dust or prepare for the judges, use Showtime Instant Detailer. This unique formula will clean off fingerprints, smudges, dust, hide minor imperfections and spider webbing. Showtime is designed with color enhancers and shine fortifies, ready whenever you need your ride to look freshly detailed.
Sold in 16 oz. spray bottle.

Order No. 800-784

Keep a couple of dry towels handy as Showtime shines best with a dry towel. Be sure to remove Showtime before it evaporates. Showtime can be applied in direct sunlight as long as the surface is not excessively warm.

California Gold Scratch Remover

There are areas of your paint's finish that see more abuse than others: on the edges of doors and the trunk lid, around the door handles, keyholes, at the hood latch, etc. What you need is a scratch remover. Mothers has one. Our Scratch Remover works on any sort of paint, any sort of finish, to help restore high mileage paint and remove surface scratches. This is a true polish-be sure to chase it with the standard regimen of waxing to properly seal and protect. Sold in 8 oz. bottle with drip cap.

Order No. 800-788

Preserves Protectant

Preserves and protects for 30 days! Our Mothers Preserves Protectant is available in traditional spray-on liquid or as convenient, ready-to-use wipes. Preserves is a penetrating UV blocker, effective on rubber, vinyl, plastic and fiberglass. Constructed to recondition and maintain the original condition and appearance of dashboards, vinyl, bumpers, trim, tires and more. Sold in 16 oz. spray bottle.

Order No. 800-720

Mothers Polish, Plastic Renew & PJ1

California Gold Chrome Polish

Thick, rich and easy-to-use, gently deep cleans and brightens chrome bumpers, wheels, trim and accessories, advanced polymers help protect against fingerprints, spotting, rust and corrosion, polish will not streak, scratch or smear, safely cleans and protects glass and mirrors Sold in 12 oz bottle

Order No. 800-716

Billet Metal Polish

Mothers Billet Metal Polish takes our world famous metal polish technology to a whole new level. State of the art cleaners and cutting edge formulation give your billet, forged and finely cast aluminum, brass and other polishable metals the absolute finest finish available-guaranteed. If you've spent big bucks on quality metal accessories, step up to a polish worthy of your investment. When using Billet Metal Polish on aluminum, a black residue should appear on the applicator. If it doesn't, stop polishing immediately. The metal is probably clear coated and should be maintained with Mothers Clear Coat Wheel Polish. Sold in 4 oz. tub.

Order No. 800-712

Plastic Renew™

- ATV and motorcycle plastic restoring
- Gives your ATV or motorcycle that showroom shine
- Restores at least four complete bikes and two ATV's
- Works on any color

Plastic Renew is a complete plastic restoring kit. 3 to 4 coats of Plastic Renew™ brings out the brilliant color and shine of new plastic. With Plastic Renew™, you don't have to worry about building up or discoloring. This product will not come off from normal washing. If your plastic gets scratched again, just follow the same procedure to restore that like-new shine. Typical motorcycle restoration will only require about one-quarter and ATV about one-half the chemical in this kit.

Order No. 945-090

Mag & Aluminum Polish

This is Mother's legendary metal polish. Mother's secret formula balances a brilliant shine with easy use for aluminum wheels and parts, brass, alloys and accessories. Application is just a matter of a clean cloth and a little elbow grease. Mothers Mag & Aluminum Polish is strong enough to put a shine to the most neglected metals and gentle enough to use on a regular basis. Sold in 5 oz. tub.

Order No. 800-710

PJ1 Renew and Protect

Non oily surface treatment for plastic, vinyl,wood, treated leather and rubber

- Ideal for seats, tires, plastic body parts, etc.
- Unique super silicone formula provides a penetrating moisturizer
- Restores original appearance

Available in 8 fl. oz. and 16 fl. oz. bottle

Description	Order No.
8 fl. oz. bottle	899-090
16 fl. oz. bottle	899-091

Three Bond Sealants, Thread Locker & HV350

Three Bond Plastic Repair Kit TB1743

This plastic repair kit quickly and economically repairs broken and cracked hard to bond plastics, fairings, mounting tabs, personal watercraft snowmobile hoods and brackets. Plastics such as Polypropylene, Polyethylene, Polyacetal and ABS are now possible to repair. Simple to use and no mixing required. Kit includes: glue, primer, accelerator, glue remover, sand paper, fiberglass and application sticks.

Description	Order No.
Plastic Repair Kit TB1743	800-150
Glue only TB1743A, 1 oz. tube	800-151

Three Bond Anaerobic Thread Locks

No matter what locking properties are required, one of Three Bond's thread lock products will get the job done. All of Three Bond's thread lock inhibit the development of rust, leaks, corrosion and are not affected by oils, chemicals, salt water, various gases or organic solvents.

Description	Three Bond Ref.	Order No.
Low Strength: Frequent Removal	TB1342 10ml	800-120
Medium Strength: Bearing & Stud	TB1333 10ml	800-124
High Temp: Extreme Temperature	TB1360 10ml	800-128

Three Bond Spoke Tight TB1361D

Drip control nozzle. Sets spoke nipples snug and protects threads from rust and corrosion. Sold in .34 oz. bottle.

Order No. 800-135

THREAD LOCKER™

Thread Locker

LOCK. RETAIN. SEAL. GASKET. Thread Locker compounds perform at high temperatures, prevent corrosion, and resist water, oils, hydrocarbons and more. They also withstand vibration, improve load distribution and act as a lubricant during assembly. A durable plastic seal cures in the absence of air when activated by a metal component or primer.

Description	Order No.
Thread Locker, Medium-Strength Blue, 10 ml	800-560

Three Bond Griplock TB1501C

Keep grips in place without damaging the rubber. Use on ATV's, motorcycles, snowmobiles and personal watercraft.
Sold in 1 oz. tube.

Order No. 800-155

HV-350™ Adhesive

This multipurpose adhesive virtually outperforms any glue, epoxy or silicone on the market today. "HV" stand for high vibration. Its tremendous elasticity allows it to work in high vibration applications, such as repairing a broken tail light. HV-350™ is sandable, paintable, highly abrasion resistant and flexible. This glue can be used on highly porous surfaces such as foam, rubber, and fiberglass. It could also be used on nonporous surfaces such as metal, glass and plastic. Sold in 3.35 oz. tube.

Order No. 800-500

Three Bond Sealants

White Silicone Liquid Gasket TB1211

A free flowing, low viscosity, one compound RTV silicone rubber. Ideal for places where long seal is absolutely critical. Recommended for sealing flange surfaces and screw sections to prevent oil, water, gasoline and chemical leaks. Effective over a wide temperature range, - 76∫ to 482∫ (60∫ to 250∫ C). Tack free in 90 minutes; fully cured in 24 hours; attains optimum strength within 3 days. Recommended for ATV, automotive, motorcycle, snowmobile and personal watercraft engines. Sold in 3.5 oz. tube.

Order No. 800-212

Clear Silicone Liquid Gasket TB1212C

A low odor, fast setting, non slumping paste that cures at room temperature to a rubbery solid. This multi-purpose RTV silicone sealant can be used in numerous bonding and sealing applications such as pumps, gearboxes, marine cabins, windows and electrical boxes. Sold in 3 oz. tube.

Order No. 800-213

Case Sealant Liquid Gasket TB1184

A semi drying synthetic rubber liquid gasket which is resistant to oil, water, chemicals and gasoline. Application areas include sealing transmission case covers, 2-stroke crank cases, timing chain cases, side covers, 2-piece cylinders, clutch housing bolts and oil filter mounting surfaces. **Note**: Replaces TB1104.
Temperature range from 40∫ F to 302∫ F. Sold in 100 g. tube.

Order No. 800-215

Gasket Maker Gray TB1200GAU3Z NEW

RTV sealant (gray) high viscosity, gasket maker. OEM specified product with good elasticity. Temperature, and chemical resistant. Resists oil, water, coolants, and gasoline. Excellent as general purpose LGM with high resistance to heat and cold.
Sold in 3.8 oz. tube.

Order No. 800-216

Gasket Maker Gray TB1217H NEW

This is a great LGM where difficult or loose fitting components are used. Can be loaded up-side-down and it's fast setting properties allow for assembly within seconds of application. It's high resistance to motor and gear oil make it an excellent choice for transmission and drive train assembly. Sold in 5 0 oz. cylindrical tube with applicator tip.

Order No. 800-218

Gasket Maker Black TB1207B NEW

One of the finest RTV LGM's available any where. It is particularly good with adhesion to both plastic and metal. The proprietary formulation features advanced elongation properties and is exceptional in uses where extreme vibration, torque, and heat are involved,
Sold in 3.4 oz. tube.

Order No. 800-217

Sealants, Solvent 184, Anti-Seize & Gel Lube

Hylomar Gasket Maker and Thread Sealant

Hylomar can be used as a dressing or a gasket maker. It is non-hardening and is impervious to chemicals such as fuels, oils and antifreeze. It makes an excellent dressing for any cut gasket where temperatures remain below 600° F. The product will form a gasket if used by itself when sealing a gap of less than 0.010 inch between precision machined surfaces. A Hylomar treated joint can be disassembled, inspected, and reassembled without reapplication. Sold in 100 gram tube and 250 ml. brush-cap can.

Description	Order No.
Valco Hylomar 100 gr Tube	800-530
Valco Hylomar 250 ml Brush-Cap Can	800-531
Valco Hylomar 5ml Blue Medium	800-532

Epoxy-Putty™

Epoxy-Putty is a steel reinforced, kneadable product that mixes like putty, bonds like epoxy, and hardens like steel. It is extremely tough and durable and adheres to a wide range of metals as well as PVC, plastic, ceramic, fiberglass, glass and wood. Epoxi-Putty sets up under water and is impervious to chemicals, and has a shelf life of three years. After one hour, it can be drilled, tapped, filed and machined. Cured Epoxy-Putty will withstand temperatures up to 500° F. Sold in 2 oz. clear cylinder with cap.

Order No. 800-540

All-In-One RTV Silicone

Premium-grade RTV silicone that does it all. RTV silicone is oxygen sensor safe, has a low volatility rating, is usable from 80° F to 600° F, and is solvent resistant. Choose from Aluminum or Clear.
Sold in 3.0 oz. tube.

Order No. 800-510

Non-Metallic Anti-Seize

Non-Metallic Anti Seize lubricant contains no metals and is safe to use on stainless steel and other sensitive alloys. The compound is specifically designed to protect against galling, erosion and sealing. Non-metallic Anti Seize makes for easier disassembly. It can be used on pipe threads, pump and valve packing, low speed bearings, shafts, gears and cable or use as a dry film lubricant.
Sold in 8 oz. can with brush.

Order No. 800-550

Solvent 184™

Solvent 184 is a great cleaner of electrical contacts, brakes, alternators, electric motors, starters, machined surfaces and much more. It removes tar, wax and petroleum products, and may be used to prepare surfaces for application of sealants and adhesives. Solvent 184 is non-flammable, easy to use and comes in a non-aerosol can with a built-in nozzle cap that reduces waste. Sold in 16 oz. nozzle-top can

Order No. 800-555

Gel Lube

Engine assembly is made easier, quicker, and cleaner with Valco's premier lubricant —GelLube™. GelLube sprays on thin and penetrates quickly—transforming into a heavy-duty, load-bearing, protective gel. GelLube does not drip, melt or shift when applied. GelLube bonds to metal surfaces and fills all small spaces and crevices on valve springs, cranks, cams, bearings and much more. Sold in 8 oz. can.

Order No. 800-565

PJ1 Products

Gold Fire® Synthetic Blend Motor Oil

Racing Grade Motor Oil for 4-stroke engines.

- Single or multi cylinder applications
- Formulated with anti-shearing agents and friction modifiers for wet clutch applications

Sold in 1 lt. bottle.

Description	Order No.
10W40	899-010
20W50	899-012

Silver Fire™ Pre-Mix Oil

Semi-synthetic 2-stroke pre-mix oil

- Competition grade semi-synthetic blend
- Power and protection
- Offers professional level protection at an amateur level price

Sold in 1 lt. bottle.

Order No. 899-024

Gold Fire® Pro Pre-Mix Oil

Premium racing grade 2-Stroke Pre-Mix

- Competition grade synthetic pre-mix
- Formulated for very high RPM conditions
- Minimizes engine wear
- Extraordinarily clean burning
- Developed in conjunction with Kenny Roberts GP road race team under race conditions

Sold in 1/2 lt. and 1 lt. bottle.

Description	Order No.
1/2 lt.	899-020
1 lt.	899-021

Silver Fire™ Injector Oil

Synthetic blend 2-stroke injector oil.

- Specially formulated for oil injection systems
- Great for non-competitive riding use
- Offers professional level protection at an amateur level price

Sold in 1 lt. bottle.

Order No. 899-026

Clutch Tuner Gear Oil

For non-motor wet clutch applications.

- Transmission Oil for 2-stroke competition motors and 4-stroke motors with separate transmissions/clutch assemblies •
- 75W for 125cc 2-stroke/250cc 4-stroke
- 80W for 250cc 2-stroke/450cc 4-stroke

Sold in 1 lt. bottle.

Description	Order No.
75W	899-030
80W	899-031

Black Label Chain Lube

Optimized for non o-ring chains
- Penetrates deep in to the chain
- Lubricates pins, rollers, side plates and sprockets
- Reduces chain stretch and the requirement for frequent adjustments
- Protects chain against the elements
- Lowers operating heat
- Safe on o-ring chains but recommended for non o-ring chains

Available in 5 fl. oz. and 13 fl.oz. aerosol can.

Description	Order No.
5 fl. oz. aerosol can	899-001
13 fl. oz. aerosol can	899-002

Blue Label Chain Lube

Optimized for O-Ring/X-Ring chains
- Clear formula won't fly off
- Lubricates pins, rollers, side plates and sprockets
- Reduces chain stretch and the requirement for frequent adjustments
- Protects chain against the elements

Available in 13 fl.oz. aerosol can.

Order No. 899-006

Fuel Injector & Carb Cleaner

Fuel system cleaner and treatment
- Keeps injectors and carburetors at peak performance for smooth and consistent power
- Removes fuel deposits and petroleum debris
- Safe for all leaded, unleaded and oxygenated fuels
- For 2 and 4 stroke engines.

Sold in 12 fl. oz. bottle.

Order No. 899-075

Cable Lube

Lubricant for control cables
- Extends cable life
- Cleans and lubricates
- Makes cable pull easier

Sold in 11 fl. oz. aerosol can.

Order No. 899-190

LPC-3® Penetrating Oil

Super rust busting penetrating lubricant
- Multipurpose lubricant
- Protects metal
- Displaces moisture

Sold in 11 fl. oz. aerosol can.

Order No. 899-191

Assembly Lube

Use on crankshafts, valve guides, cylinder walls, pistons, camshafts, etc. Synthetic and petroleum oil soluble.

Sold in 11 fl. oz. aerosol can.

Order No. 899-192

PJ1 Super Cleaner

Multi-application, non-residue, evaporating degreaser
- High pressure blasts
- Powerful solvent melts oil, carbon, grease and grime away
- Dries quickly, displaces moisture and leaves no residue

Sold in California Compliant 13 fl. oz. aerosol can.

Order No. 899-081

PJ1 Contact Cleaner

- Professional grade contact cleaner
- Powerful spray removes carbon and contaminants from plugs, points, and electrical components

Sold in California Compliant 13 fl. oz. aerosol can.

Order No. 899-096

PJ1 Products & Redline Suspension Fluids

Foam Air Filter Oil

• Available in aerosol and liquid application formulas • Petroleum and synthetic oil soluble

Description	Order No.
Foam Air Filter Oil, 13 fl. oz. aerosol can	899-067
Air Filter Kit	899-070

(Includes Foam Air Filter Oil 899-067 and Air Filter Cleaner 899-068)

Fabric Air Filter Oil

• Aerosol Formula
• Quick, easy application Available in 15 fl. oz. aerosol can.

Order No. 899-065

Filter Cleaner

• Cleans fabric and foam air filters • Easy to use, spray on-wash off
• Will not harm glues
Available in 15 fl. oz. aerosol can.

Order No. 899-068

Red Line Suspension Fluids

Red Line Suspension Fluids provide very good shear stability which means that they should not degrade with use. They change very little with temperature and will provide lower operating temperatures for the same viscosity when compared to conventional suspension fluids. They are also very low forming and provide good seal lubricity and antiwear properties. They can be blended together in any proportion to achieve an intermediate viscosity. For use in cartridge forks and motorcycle shocks. Sold in 16 oz. bottle.

Description	SAE Weight	Order No.
Like Water Suspension Fluid no	No SAE rating	900-860
Extra Light Suspension Fluid	2.5wt	900-861
Lightweight Suspension Fluid	5wt	900-862
Medium Suspension Fluid	10wt	900-863

Cartridge Pro Fork Fluid

Meets or exceeds OEM specifications for Showa and Kayaba cartridge / twin chamber forks. Sold in 1 lt. bottle.

Order No. 899-060

Fork Tuner Oil

For updating and adjusting fork systems.
• An effective and inexpensive method to "tune" conventional fork compression
• For different rider weights and conditions
Sold in 1/2 lt. and 1 lt. bottle.

Description	Order No.
2.5W, 1/2 lt. bottle	899-040
5W, 1 lt. bottle	899-043
7.5W, 1 lt. bottle	899-045
10W, 1 lt. bottle	899-047

Synthetic Motor Oils

Red Line's synthetic engine oils are designed to provide the highest protection, cleanliness and superior drain intervals with the lowest friction for your gasoline, diesel, motorcycle or marine engine. Redline's products are unique because they contain polyol ester base stocks, the only lubricants which can withstand the tremendous heat of modern jet engines. Sold in quart bottles.

Description	Order No.
5W30	900-804
10W30	900-800
10W40	900-801
15W50	900-802
20W50	900-803

High Performance Motorcycle Oils

Red Line's High Performance Motorcycle Oils are fully-synthetic formulas specifically created for the high demands of the latest high-revving four-stroke motocross bikes, ATVs, Sportbikes, and V-Twins. Available in popular viscosities of 10W30, 10W40, 20W50, and 20W60, these ester-based products contain the anti-wear chemistry demanded by mechanics and enthusiasts. This oil also features lower levels of friction modifiers for superior wet clutch operation. Excellent thermal stability, oxidation resistance, cleanliness, and ability to lubricate hot metal make Red Line High Performance Motor Oil a superior lubricant. Recommended for JASO MB, API SJ, SG, & SH.
Sold in quart bottles.

Description	Order No.
10W30	900-880
10W40	900-881
20W50	900-883
20W60HD	900-805

Two-Stroke Racing Oil

Red Line's popular two-stroke lubricants contain base oil which have the highest film strength and greatest affinity for hot metal. Because Red Line is a superior high temperature lubricant, it can be used at lower fuel to oil ratios, increasing power and providing excellent scuff protection and cleanliness. Where many two-stroke oils are recommended to run 32:1, many Red Line customers often mix at a leaner 40:1. Red Line provides the lubricating cleanliness, with low carbon residue that dramatically reduces plug fouling and smoke. Red Line provides special protection for formulated fuels. Dyno proven to make more power over longer periods of operating time.
Sold in 16 oz. and gallon bottles.

Description	Qt	Order No.
2-Stroke All Sport	16 oz	900-833
2-Stroke Alcohol	16 oz	900-848
2-Stroke Race	16 oz	900-830
2-Stroke Kart	16 oz	900-831
Watercraft & Injection	1 gallon	900-854
2-Stroke Race	1 gallon	900-829
2-Stroke Kart	1 gallon	900-832

Synthetic Racing Oil

Red Line's racing synthetic oils are made with the most thermally stable synthetic base stocks available and provide the best high-temperature lubrication and a higher film strength than any petroleum or synthetic on the market today. Although Red Line racing oils are categorized as "straight grades", their low-temperature properties make them exceptional multigrade, allowing 2-4% more power than an oil of similar viscosity, while providing much more protection. Each reduction in viscosity grade allows 1-2% more power. To reduce the chance of detonation, Red Line race oils contain very few detergents and are not recommended for street use. Sold in quart bottles.

Description	Order No.
20 WT SAE (5W20)	900-810
30 WT SAE (10W30)	900-811
40 WT SAE (15W40)	900-812
50 WT SAE (15W50)	900-813

Redline Lubricants

ShockProof™ Gear Oil

A unique lubricant containing a suspension of solid microscopic particle as an extreme pressure agent--unique solid dispersion which cushions gear teeth to help prevent tooth breakage and allows the use of lower viscosities. The viscosity characteristics allow the lubricant to resist throw off and provide a film thickness greater than an SAE250 grade, with the same low fluid friction as with 80W140. Recommended for heavily-loaded racing differentials and transmissions, Off Road racing and problem gearboxes. Offers a "best of both worlds" balance of relatively low drag and utmost in protection. Sold in quart bottles.

Description	Order No.
Superlight 70W90	900-820
Lightweight 75W/140	900-821
Heavyweight 75W/250	900-822
Gear oil for Automotive Differentials 75W/90	900-823

SI-1 Complete Fuel System Cleaner

SI-1's injector and valve detergent is a concentrated package of the most powerful high-temperature detergents available to clean gasoline fuel injectors or carburetors, intake valves and combustion chambers. and can clean injectors to nearly 100% efficiency in one treatment. The cleansing effect on injector deposits can raise fuel economy 12% or even greater depending on the condition of the injectors. SI-1 also contains detergents and a synthetic upper cylinder lubricant which will help clean pollution control valves and can reduce octane requirements by two numbers. SI-1 also protects the fuel system from rust. Sold in 15 fl. oz. bottle.

Order No. 900-870

Water Wetter®

Water Wetter is a unique wetting agent for cooling systems which reduces coolant temperatures by as much as 30∫ F. This liquid product can be used to provide rust and corrosion protection in plain water for racing engines, which provides much better heat transfer properties than glycol-based antifreeze. Or it can be added to new or used antifreeze to improve the heat transfer of ethylene and propylene glycol systems. Designed for modern aluminum, cast iron, copper, brass and bronze systems. Compatible with all antifreezes, including the latest long-life variations. Sold in 12 fl. oz. bottle.

Order No. 900-842

4-Stroke Alcohol Fuel Lube

Red Line Alcohol Lube is designed to combat corrosion and water absorption within the fuel system of alcohol burning racing engines. This specifically developed product will provide lubrication for all system components as well as the upper cylinder, resulting in a much longer component life when compared to straight alcohol.
Sold in 12 fl. oz. bottle.

Order No. 900-844

80W Motorcycle Gear Oil with ShockProof™

Designed for applications like two-stroke bikes, shifter karts, the CRF250/CRF450 transmission. Used where an 80W oil is called for, ShockProof's microscopic solid medium provides cushioning between gear teeth, while maintaining lower drag. Reduces the thinning effect from high temperatures. Sold in quart bottle.

Description	Order No.
80W Gear Oil with ShockProof	900-824

Assembly Lube

Provides three-times greater film strength than conventional black Molybdenum Disulfide greases and will not clog oil filters. This product clings to all surfaces and is an excellent rust inhibitor, allowing the storage of parts for years. A thin film of protection is all that is required when mating parts. Sold in 4 oz. tub.

Order No. 900-840

K&N Filter Oil, Rustol & Chemical Accessories

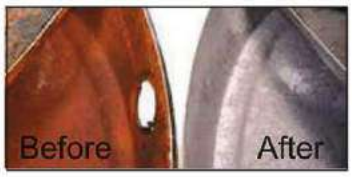

Rustol

Rustol gives excellent results with little or no work required. It is safe and non-corrosive to all metals, rubber coatings and paint. While destroying exisiting rust, it forms a protective bond that prevents raw rust from forming later. Rustol is odorless unlike conventional rust removers and is shipped in a concentrated form. Believe it or not, the same batch of Rustol can be used many times. Note: Rustol should be diluted according to instructions before use. Available in 1 quart, 1 gallon, and 20 liter.

Description	Order No.
1 quart bottle	800-250
1 gallon bottle	800-252
20 liter bottle (bag in a box)	800-253

K&N FILTERCHARGER® OIL

The only oil specially formulated to work with in combination with the COTTON FABRIC IN K&N FILTERCHARGER® ELEMENTS PROVIDING OUTSTANDING AIR filtration. When used as directed, it quickly penetrates the filter pleats, where it remains suspended in the cotton fabric unit until the element is cleaned with K&N Air Filter Cleaner.

Air Filter Oil	K&N No.	Order No.
6-1/2 oz. aerosol can	99-0504	005-530
12 oz. aerosol can	99-0516	005-532
8 oz. squeeze bottle	99-0533	005-534
Air Filter Cleaner & Degreaser		
32 fl. oz. squirt bottle	99-0621	005-520
The only cleaner formulated for K&N FILTERCHARGER® ELEMENTS. **Note:** Not to be used on polished anodized aluminum.		

RED LINE SYNTHETIC OIL

Red Line Super Cool with Water Wetter

Performance coolant with Water Wetter. Super Cool with Water Wetter is a pre-mixed coolant for motorcycles, ATV's, karts, generators and other small water-cooled engines. This product doubles the wetting ability of water to improve heat transfer and reduce cylinder head temperature. Provides excellent rust and corrosion protection for modern cast iron, aluminum and brass systems.
Sold in 1/2 gallon container.

Order No. 900-843

K&N RECHARGER® FILTER CARE SERVICE KIT

This six step maintenance system is designed to recharge any K&N FILTERCHARGERÆ AIR FILTER. IT RESTORES AIR FLOW EFFICIENCY SO YOUR FILTERCHARGERÆ PERFORMS LIKE NEW.

RECHARGER® FILTER CARE SERVICE KIT Order No.		K&N No.
Kit includes 6-1/2 oz. aerosol spray oil, 12 oz. filter cleaner and service decal.	99-5000	005-540
RECHARGER® FILTER CARE SERVICE KIT		
Kit includes 8 oz. squeeze oil, 12 oz. filter cleaner and service decal. Same as **005-540** except has squeeze bottle instead of spray can.	99-5050	005-541

Grease, Charlies Soap & Chemical Containers

949-100 949-101

Plastic Oil Filler Cans

Available in 1 and 2 liter size. Sold each. ***Made in Japan.***

Description	Order No.
1 Liter	949-100
2 Liter	949-101

949-110 949-111

Measuring Cylinders

Available in 100cc and 200cc plastic beaker.
Sold each. ***Made in Japan.***

Description	Order No.
100cc	949-110
200cc	949-111

Charlie's Soap

Charlie's Soap for motorcycles, is a very effective, yet mild product for cleaning all motorcycles. Safe for all plastics, decals, and expensive paint jobs. Use full strength for dirt bikes or dilute 10:1 for street bikes. Sold in 17 oz. bottle.

Order No. 800-300

Redline Super Trick Funnel

Oddly shaped funnel allows pouring of oil or coolant around bodywork to reach hard to get to filler openings. Pours in both horizontal and vertical positions. Sold each.

Order No. 900-846

White Lithium Grease

Multipurpose White Lithium Grease™ is a quality white grease (NLGI#1) specifically designed to protect engine parts.
The exceptional consistency of this grease creates ease in application for all engine parts including valves, bearings, crankshafts, wheels and nut assemblies and all other areas where metal-metal contacts occur. Sold in 8 oz. tube.

Order No. 800-545

Synthetic CV-2 Grease

Red Line CV-2 Grease is designed to withstand the extreme temperatures and pressures which occur in high-performance wheel bearings and CV-joints. The excellent high-temperature stability, extreme-pressure protection, and water resistance enables it to out-perform even the best conventional or synthetic greases. Red Line CV-2 Grease can be used in a wide range of applications at temperatures ranging between -100∫ F to 500∫ F and provides good oxidation and corrosion resistance, low evaporation and oil separation, and has a minimum effect on rubber seals. Sold in 14 oz. tub.

Order No. 900-850

Sync Pro Carburetor Tuner

New mercury free design carburetor tuner. Rugged, impact-resistant ABS enclosure with convenient storage area. For use with any 2, 3, or 4-cylinder, 4-stroke motorcycle. Tuner is spill proof and can be stored in a horizontal or vertical position. Includes manometer fluid, hoses, 5mm adapters, in-line restrictors and instructions. ***Made in the U.S.A.***

Order No. 950-402

Accessories for Sync Pro Carburetor Tuner

Description	M.P. No.	Order No.
5mm Rigid Brass Hose Adapters for Honda & Suzuki (set of 4)	08-0013	950-410
6mm Rigid Brass Hose Adapters for Yamaha (set of 4)	08-0040	950-409

Includes 2 long and 2 short adapters with restrictors.

5mm Permanent Hose Adapters (each)	08-0216	950-720
6mm Permanent Hose Adapters (each)	08-0217	950-721

Designed for permanent installation into the vacuum ports on the intake manifold. Once installed, the hoses can be routed to an accessible location. Reduces time for carburetor synchronization.

5mm Permanent Brass Adapters (each)	08-0218	950-722
6mm Permanent Brass Adapters (each)	08-0219	950-723

Brass adapter with rubber cap. Designed for permanent installation into the vacuum ports. Eliminates the need to install adapters before every synchronization.

SyncPro Fluid Refill

Manometer fluid refill for SyncPro Carb Tuner. Mercucry free proprietary petroleum-based mineral oil blend. SyncPro Manometer Fluid Refill does NOT work with older Motion Pro mercury carburetor synchronizers.

Made in the U.S.A.

Order No. 950-791

5mm Rigid Brass Hose Adapters

Permanent Hose Adapters

Permanent Brass Adapters w/Rubber Cap

Carb Synchronizer

Complete sets come with vacuum gauges, hoses, adapters, mounting plate and instructions.

Description	Order No.
2-Gauge Set	950-205
4-Gauge Set	950-206

Carburetor Tools

950-450

950-451

Motion Pro Auxiliary Gas Tanks

These impact resistant, graduated auxiliary gas tanks take the place of the original gas tank when performing carb synchronizing. Each gas tank includes four feet of 1/4" fuel line and inline brass petcock.

Auxiliary Gas Tank **Order No. 950-450**
Use with carbureted applications. Capacity is 200cc or 1/2 gallon.

Deluxe Auxiliary Gas Tank **Order No. 950-451**
Redesigned for use on fuel injected applications. Can also be used with carbureted applications. Has fuel return attachment on top cap. Capacity is 200cc or 1/2 gallon.

950-700

950-701

950-702

950-707

Motion Pro Inline Fuel Valves

Ideal for use on ATV's and other vehicles where inline fuel control is necessary. Not recommended for engines above rate size.

Description	Order No.
Inline Fuel Valve for 3/16" I.D. Fuel Valve, up to 200cc	950-700
Inline Fuel Valve for 5/16" I.D. Fuel Valve, up to 300cc	950-701
Inline Fuel Valve for 1/4" I.D. Fuel Valve, up to 300cc	950-702
Inline Fuel Valve with 1/4" threaded pipe and 1/4" barb end	950-707

K&L Carb Holder Rubber Plugs

Universal rubber plug has many uses. Sold pk/5. ***Made in Japan.***

Order No. 005-860

VamPLIERS™ NEW

The VamPLIERS are an all-purpose set of pliers that feature a unique design to remove stubborn fasteners. The handles are very ergonomically correct, and they are covered in a tough bright red polymer that is not only really visible, but also solvent resistant. It will shield you from an electrical shock if you hit an unexpected source of power. This is an exceptionally well-made set of pliers crafted from treated top-quality carbon steel that have a spring-loaded operation to open them so you don't have to manipulate the tool both ways.

Order No. 950-305

Sudco Carb Vacuum Fitting Cap

Replacement part for Mikuni RS Smoothbore carburetors. This rubber plug is found on many Yamaha models. ***Made in Japan.*** Sold each.

Order No. 002-646

009-800

009-801

K&L Supply Carburetor Passage Plugs

Made in Japan. Sold pk/4.

Honda

Order No. 009-800

Model	Year
GL1000/L Goldwing	75-79

Suzuki

Order No. 009-801

Model	Year
GN125	
GS Series 450/500/550/650/700/750/850/1000/1100/1150	82-95

Yamaha

Order No. 009-802

Model	Year
XS650G/H, Special II	80-81
XS650 SG/ ST Special	80-81
XS650SG/SH Special	80-81
XS650SJ/SK Heritage	82-83
XS1100G/H	80-81
XS1100SG/SH Special	80-81

009-802

Motion Pro Pilot Screw Adjusting Tool

Designed for those hard-to-reach air/fuel mixture screws on most multi-cylinder motorcycles. 110∫ angled head extends reach 1". Length is 17" with a straight-slot blade tip. Sold each.

Order No. 950-406

Motion Pro 90-Degree 1/4" Hex Driver

Gear driven, 1/4" hex driver set is precision made of aircraft grade aluminum and stainless steel. Designed for use on hard-to-reach air/fuel screws on multi-cylinder motorcycles. Can be used with any 1/4" or 6mm hex bits. Includes straight slot, phillips, d-shape pilot screw bit, 6mm hex jet bit & 1/4" - hex - 1/4" drive bit.

Order No. 950-478

Description	Order No.
Bit, D-Shape for 950-470	950-789

Motion Pro Carb Adjusting Tool

Designed for use on Honda, Kawasaki, Suzuki, and Yamaha. Fits both Mikuni and Keihin carbs with 8mm hex nut and screw driver slot adjusting bolt. This tool make those hard to reach carb adjustments easy and safe. Length is 11". Sold each.

Order No. 950-405

K&L Carb Cleaner Wire Set

14 piece wire set with spiral knurling. Use for cleaning popular size jets and carb body holes/passages.

Order No. 950-203

Motion Pro FCR Carb Tool

Longer bits make this set ideal for reaching into recessed cavities to adjust Keihin FCR carburetors. Cap compartment will hold a few spare jets. Ideal for trail riders and garage mechanics. Set includes three bits, 6mm hex for main jets, long reach straight slot for pilot jets and a 3mm Allen for float bowl removal. Sold as a set.

Order No. 950-403

Motion Pro Main Jet Wrenches

These high quality, die cast construction main jet wrenches have a rubber snap-off lid on body for storage of extra jets. Sold each.

Description	Order No.
6mm Round	950-417
8mm Hex	950-416
6mm Hex	950-415

Keihin/Mikuni Main Jet Wrench

Description	Order No.
Main Jet Wrench	002-401

Carburetor Tools

K&L Carb Service Stand

This stand conveniently positions carburetors at an ideal height and allows 360∞ rotation for easy access. Parts storage base can be bench mounted. Ideal for multi carburetors. Included expansion plugs hold carbs with openings from 22mm to 41mm I.D. for unobstructed use.

Order No. 950-201

Motion Pro Float Bowl Wrench

Made from lightweight 6061 T-6 aluminum. This wrench is designed to remove the 17mm float bowl drain plugs. 12 point hex and low profile design for tight access. Sold each.

Order No. 950-737

HSR Easy Tool Kit

The Easy Tool Kit includes an Easy Wrench with 17mm x 11/16" open end wrench, Mini-T Jet Wrench with Phillips & Flat head blades and a 2.5mm Ball End Allen bit with 6mm hex. Mikuni No. KHS-033.

Order No. 002-046

Sudco Mikuni Carb Tool Kit

This handy little kit includes a multi-purpose wrench with ruler markings and a screwdriver with assorted blades and sockets. Sold as a set.

Order No. 002-045

Keihin FCR Tools

These tools allow access to allen screws from awkward angles which are not possible with traditional hex keys. Sold each.

Description	Order No.
3mm Ball Hex Driver	950-210
4mm Ball Hex Driver	950-211

Magnetic Parts Dish

All-purpose magnetic dish is ideal for keeping track of loose fasteners and other small parts. Attaches magnetically to any steel surface. Measures 6 in. in diameter and is 1in. deep.

Order No. 950-790

Motion Pro Fuel Line Fittings Kit

This Fuel Line Fittings Kit contains a wide selection of Y and T fittings, hose clamps, o-clips and O-clip Pincher tool in an ABS plastic case. Ideal for the shop mechanic. Individual replacement parts are available to replenish the kit.

Order No. 950-462

Steel O-Clip Pincer Tool

Used to install and remove O-clips, PVC coated grip.

Order No. 950-774

Coolant Recovery System

Prevents loss of coolant due to overheating, works on most off-road water-cooled motorcycles, snowmobiles and ATVs, designed for hot weather and/or high-altitude riding conditions, mounts to frame or behind number plate, includes 8 oz. bottle, hoses, clamps, mounting strap and instructions.

Order No. 950-778

Oil Filter Bolt

Honda OEM 15420-333-000 Order No. 631-505

***This is a special order item.**

Application: Honda: CB650 79-82, **CB650C Custom** 80-81, **CB650SC Nighhawk** 1982, **CB750F Super Sport** 77-78

Hose Shears

Scissor-action cutter, fast cutting of thin wall and small diameter PVC or Tygon type tubing, replaceable, teflon-coated tool steel blades. Blades can be re-sharpened.

Order No. 950-773

Quick Disconnect Inline Fuel Couplers

For quick disconnections between tanks, pumps, filter and carburetors. Two types available, single straight-thru and shut-off.

Description	Order No.
Straight-Thru, no-shut-off with 5/16" fuel line fitting	009-170
Shut-off with 5/16" fuel line fitting	009-171

Brass T-Fittings *Sold each*

Description	Order No.
1/4" Brass Fuel T	009-100
.17" Brass Fuel T	009-101
5/16" Brass Fuel T	007-811
3/8" Brass Fuel T	009-102

K&N Fuel Line "T" *Sold each*

High flow, durable, lightweight, easy to use. One size fits 1/4" to 3/8" I.D. hose. Color: Black, Height: 0.999 in (25 mm), Length: 1.575 in (40 mm), Material Used: Plastic

Order No. 81-0270

Shop Tools

Sudco Mikuni Tuning Manual

This 92 page manual includes exploded parts views, parts listings and optional parts. Guides you through tuning and trouble shooting for the popular lines of Mikuni Carburetors. The definite reference for Mikuni Carburetors and a must for any do-it-yourself type. Sold each.

Order No. 002-999

Motion Pro Battery Booster Cable Set

5 feet length, conveniently sized for motorcycle jump starting. Heavy-duty alligator clips are color-coded red and black. Conductor wire is firmly soldered to clamp for durability and reliability. Sold each.

Order No. 950-745

Mikuni Pocket Tuner

A handy pocket-size calculator which can be used to determine required jetting changes in Mikuni carburetors due to climate and temperature changes. The Pocket Tuner is applicable to both single and multi-carburetor applications on two-stroke and four-stroke engines. It also has a guide for determining rich or lean carburetor conditions.

Order No. 002-430

Motion Pro Cable Luber

Use to inject lubricant into cable housing. Clamps over cable housing allowing an aerosol can tip to be connected for injection inside. Once the lubricant runs out of far end, the cable is lubricated. Sold each.

Order No. 950-447

008-001

008-002

Sudco Plastic Jet Boxes (Storage Boxes)

Two boxes available, 36 compartment and 18 compartment. Use for valve shim storage, small parts, electrical connectors and carburetor jets. Sold each.

Description	Order No.
Jet Box with 36 Compartments 7-1/2" L x 10-1/2" L x 1-1/4" H	008-001
Jet Box with 18 Compartments 3-1/4" L x 6-3/4" L x 1-1/2" H	008-002

Motion Pro Clutch Holding Tool

Made from medium carbon steel with hardened jaws. Features 8mm spanner pins. Jaws open up to 5" wide. Hold clutch hubs, flywheels, gears, sprockets, etc. Recommended for square tooth style clutch hubs. **NOT RECOMMENDED** for v-groove or half round style clutch hubs. Sold each.

Order No. 950-728

7 Way Crimping Tool (CT-1)

- Incorporates wire cutter, terminal crimper and wire stripper into one handy tool
- Black anodized finish with insulated hand grips
- Crimp slot on end of tool secures most ignition terminals including "W" type, right angle and "High-Tower" terminals
- Crimps 7mm to 8.5mm ignition wire
- Works with 10 to 22 gauge solder-less terminals
- **WARNING** - Disconnect power source before using this tool.

Order No. 618-999

Motion Pro Yamaha ATV Axle Wrench

Made from heat-treated steel. Includes a 1/2" drive slot for use with a torque wrench or breaker bar. Sold as a set.

Order No. 950-464

Motion Pro Torque Wrench Adapter

Made from chrome vanadium tool steel with hard nickel pewter finish. Properly torque two-stroke cylinder base nuts and hard to reach fasteners. Multiply your torque wrench readings by chart supplied with tool for proper torque specifications. Always check with your owners manual for proper torque specifications for each model.

Order No. 950-460

T-Handle Wrenches

Motion Pro 7 PC. Metric T-Handles

Durable nickel pewter finish. Includes 8mm, 10mm, 12mm, 14mm, 17mm and 19mm T-Handles with deep 6-point sockets. Includes a vinyl storage pouch. Sold as a set. (08-0113)

Order No. 950-730

Motion Pro 6 PC. Racer T-Handles Set

Durable nickel pewter finish. Includes 8mm, 10mm, 12mm, 14mm, T-Handles with deep 6-point sockets and No. 2 & No. 3 T-Handle Phillips screwdrivers.. Includes a vinyl storage pouch. Sold as a set. (08-0145)

Order No. 950-732

Motion Pro 5 PC. Mini-Pro T-Handles

Durable hard nickel pewter finish with Chrome-vanadium tool steel shafts. Includes 8mm, 10mm, 12mm, 13mm and 14mm, T-Handles with deep 6-point sockets. Sold as a set. (08-0340)

Order No. 950-734

Motion Pro T-Handle Phillips Set

Kit includes no 1, 2, and 3 Phillips t-handles, heat treated chromemoly steel shaft and handle, up to 150 percent stronger than regular chrome-vanadium shafts used by other makers, durable chrome finish Limited lifetime warranty. Sold as a set. (08-0557)

Order No. 950-733

Motion Pro 11-Slot T-Handle Rack

Chrome finish, one piece design with 11 slot rack. Easily hangs on side of most tool boxes. Keeps T-Handles accessible and ready for use. Sold each. (08-0114)

Order No. 950-731

Motion Pro Timing Plug Wrench

Three different blade sizes. Fits straight-slot timing cover plugs on most motorcycles and ATV's. Blade sizes are 16mm (5/8"), 22mm (7/8") and 38mm (1-1/2"). Sold each.

Order No. 950-444

Motion Pro 4-Stroke Leakdown Tester

Checks percentage of cylinder leakage in a 4-stroke engine. Tester includes 10, 12, and 14mm spark plug adapters, regulator and gauge.

Order No. 950-401

Motion Pro 2-Stroke Leakdown Tester

Designed to check for air leaks in 2-stroke engine. Tester includes air pressure gauge, pump-up bulb and most fittings and adapters for single and twin cylinder 2-stroke motorcycle engines. Packed in a convenient carry box, complete with instructions.

Order No. 950-400

Motion Pro Crankcase Splitter

Works on most 2 & 4-stroke motorcycle engines with vertical split cases. Unique design eliminates binding under heavy loads. Movable fingers allow a multitude of bolt patterns to be used. Includes 6mm & 8mm mounting bolts.

Order No. 950-479

Valco The Tube-Grip®

The Tube-Grip maximizes the usage of any material packaged in a flexible tube.

Motion Pro Valve Spring Compressor

Improved quick action design, used in same applications as Honda tool 07757-0010000 and Kowa tool AKS-215-1010 OEM tools. Accepts Motion Pro adapters (08-0248) as well as Honda OEM adapters 07GME-KT70200, 07JME-KY20100, and 07959-KM30101. For use in shim under bucket and small diameter valve spring keeper applications, both cup-type and ball-type tips are included. Adapter on compressor is double stepped. The inner step diameter is 17mm - Outer step diameter is 21mm.

Order No. 950-772

Motion Pro Stud Installation Tools

These hex head stud tools allow installation of cylinder studs on most motorcycle applications without damaging the threads. Hex head is 3/4" or 19mm. Sold each. Order by size needed.

Made in the USA.

Description	Order No.
6 x 1.0mm	950-456
8 x 1.25mm	950-457
10 x 1.25mm	950-458

Motion Pro Spring Hooks (Pullers)

Use to remove exhaust pipe springs, seat or tank holding springs, cotter pins, side stand springs and other parts. Sold each.

Description	Order No.
Standard Spring Tool	950-725
Heavy Duty T-Handle Spring Hook	950-726

Peeler™

Valco The Peeler™

The Peeler is very effective at removing silicone gasket material, paper or fiber gasket residue. It features a short, easy-to-hold handle for close, powerful control of the blade. The steel blade can be easily replaced. The Powered Peeler is available for air-ratchet and powered screw drivers It fits 9/16" sockets.

Shop Tools

Motion Pro Degree Wheel

Manufactured from .052" thick aluminum with a 6-3/4" outside diameter and a 6mm center hole. Blue anodized finish with easy to read numbers. Check or set timing or cam timing.
Use with 2 & 4-stroke engines. Sold each.

Order No. 950-442

Motion Pro Tappet Tool Set

Set contains three socket wrenches in 8mm, 9mm, 10mm and three adjusters, screw type, 3mm square and 4mm square. Fits nearly all models of Honda, Suzuki, and Yamaha Motorcycles and ATV's with screw-type adjusters.

Order No. 950-440

Motion Pro DELUXE Piston Pin Puller Tool

Interchangeable piston adapters, Made of durable 6061 aluminum Fits all piston pins from 12 mm (1/2 inch) to 24 mm (1 inch), Works on both full skirt and short skirt (slipper) pistons, Non marring aluminum pin adapters Durable blue anodized finish with laser engraved logo. ***Made in the U.S.A.*** Sold each.

Order No. 950-445

Motion Pro Valve Shim Tools

A must when setting valves with shim type adjustment.
Available for the following models:

Description	Order No.
Honda CB750/900/CBX1000	950-436
Kawasaki KZ750 twin, KZ900/1000/1100/1300	950-437
Suzuki GS550/750/850/1100	950-435
Yamaha XJ600 Seca II	950-435
Yamaha XJ550/XJ650/XJ750	950-438
Yamaha XS750/XS850/XS1100	950-438

APE Positive Stop TDC Tools

The only accurate way to find TDC (top dead center).
Available in the following sizes:

Description	Order No.
10mm TDC Tool	950-235
12mm TDC Tool	950-236
14mm TDC Tool	950-237

Motion Pro Valve Clearance Gauges

Sold in Card of six.

Assortment 2 each of the following sizes:
.002" - .003" (.05mm - .08mm), .004" - .005" (.10mm - .13mm)
.006" - .008" (.15mm - .20mm).

Order No. 950-389

Motion Pro Hydraulic Brake Bleeder

Makes bleeding your brakes a one-person job. The unique check valve allows brake fluid and air to escape while preventing air from re-entering the system. Instructions and hose included.
Made in the U.S.A.

Order No. 950-452

Mityvac Brake Bleeding Kit

Flushes out brake fluid quickly and cleanly into reservoir container. Kit includes a repairable pump, reservoir bottle with transfer and storage lids, bleeding adapters, plastic tubing and complete instructions.

Order No. 850-060

Motion Pro Master Cylinder Snap-Ring Pliers

Allows removal of internal snap rings used in hydraulic master cylinders Replaces Honda# 07914-SA50001, can be used to remove and replace small to medium internal snap rings up to 50mm deep, including those used for transmission gear locating, bearing retention, and oil seal retention, applicable to some fork seal retaining rings.

Order No. 950-775

Motion Pro Chrome-Moly Hex Axle Tool

Heavy-duty heat treated 4130 chrome-molly construction, 3/8" square drive drivers are rated for a maximum of 150 ft.- lbs.

Order No. 950-758

Motion Pro Mini Brake Bleeder NEW

Mini Brake Bleeders combine wrench and bleeder valve into one convenient tool. Internal check valve and seal for easy bleeding. Simple to use design makes bleeding job faster. Three nipple sizes available.

Mini Brake Bleeder 8mm	950-453
Mini Brake Bleeder 10mm	950-454
Mini Brake Bleeder 11mm	950-455

Bearing & Holding Tools

950-475

950-476

Motion Pro Seal/Bearing Retainer Tools

Designed to remove & install the rear wheel seal/bearing retainer ring on Honda CR's and XR's. Precision design prevents damage to the retainer ring after peened "stakes" have been removed by drilling. Versatile design features a 22mm external hex head and 3/8" square drive. Order per application required. Sold each.

44mm CR Seal/Bearing Retainer Tool

For use on Honda CR125/250R 84-86, 89-99 and CR500R 84-86, 89-01. Honda OEM Reference 41231-KZ4-000

Order No. 950-476

47mm CR/XR Seal/Bearing Retainer Tool

For use on Honda XR250R 84-91, XR350R 83-85, XR500R 81-84, XL600R 83-87, XR600R 85-00 and XR650L 93-00. Honda OEM Reference 41231-429-000 and 41231-286-000.

Order No. 950-475

Motion Pro Swingarm Bearing Tool

Designed for installation of the swingarm bearings on late-model Japanese motorcycles. Puller draws bearing into the swingarm and includes three drivers for use with common bearing sizes. Kit includes driver sizes I.D. 20mm / O.D 26mm, I.D. 21mm / O.D. 26mm & I.D. 22mm / O.D.27mm.

Order No. 950-768

Motion Pro Rotor and Sprocket Holder

Keeps flywheels, rotors and sprockets from rotating during removal and installation. Holds sprockets and rotors with holes center to center at a minimum distance of 13mm and a maximum distance of 230mm. Features 5 and 9mm pins. Adjustable stop-screw keeps tool open at set distance.

Order No. 950-756

Motion Pro Wheel Bearing Remover Set

8 piece metric set includes large and small drivers, 10mm, 12mm, 15mm, 17mm, 20mm, and 25mm removers. Dependable split collect design, and metric sizes allow use with metric applications.

Order No. 950-757

Motion Pro Chain Breaker & Riveting Tool

This tool is versatile enough to be used on cam chains or drive chains. 2mm breaking tip for most cam chains, 3mm breaking tip for chains #25-#35 only, and 4mm breaking tip for drive chain #428-#630, it is recommended to grind the rivet head. Each kit includes 3 pin sizes to fit most chains (2.2mm, 2.9mm, 3.8mm) and press plates. with plastic storage box and instructions.

Order No. 950-420

Replacement Parts

Description	Order No.
2mm Replacement Tip	950-421
3mm Replacement Tip	950-422
4mm Replacement Tip	950-423
Replacement Rivet Tip	950-424

Motion Pro Master Link Clip Pliers

Designed to simplify installation and removal of clip-type master links, one tip is shorter and notched to be placed on the pin which allows the longer end to push the clip.

Order No. 950-759

Motion Pro Chain Breaker

For chain #420 to #530 chain. This chain breaker pushes link pin completely through link/side plate. Handle folds away for easy storage. Sold each.

Order No. 950-430

Replacement Pin - Heat treated for strength.

Order No. 950-431

Motion Pro PBR Chain Tool NEW

Innovative design will Press, Break & Rivet 520, 525, & 530 chains with one convenient tool. Removes chain pins, press master-link plates and rivet hollow nose & soft nose (quad stake) master link pins on O-ring and non O-ring type chains. Easy to use design allows you to change tool functions by simply moving the position of the anvil block. Indexing letters on movable anvil and body ensures correct tool configuration. All steel construction with heat treated components for strength and durability. Compact and light enough to carry in a tool bag for trail side repairs. Includes spare pin. Patented Design

Order No. 950-785

Motion Pro Jumbo Chain Tool NEW

Designed to break roller chain up to 630. Fits all standard & O-ring chain sizes 520 to 630. Rivets chain up to 530 (not 630). Master link side plate press kit included to press on side plates on chains up to 530 (not 630). The extractor pin is precisely guided by a removable guide, ensuring long pin life. May be bolted to a work bench, supported in a vise or held by handle. Recommended for heavy-duty use For riveting hollow nose master links. Requires 08-0142 Quad Stake Rivet Kit (not included) to rivet soft-nose type master link pin tip

Order No. 950-786

Wheel Tools

Rim Protectors

Protects your wheel from scratches and dings caused by tire changing tools. Retrieval cords are included for easy use

Order No. 950-752

Spoon Tire Iron

Curved end fits securely in the hand. Hard nickel pewter finish 10" long and weighs 4.2oz. Sold each.

Order No. 950-746

Bead Popper ™

Designed for breaking the bead on road and off-road motorcycle tires, great for the shop, trail or on the road, Compact and lightweight (only 3.7 oz) stores easily in your emergency tool pack or tool box, can be used with the wheel on or off the motorcycle, will not scratch the wheel, easier and more convenient than press or lever tools, made of a durable, high-impact plastic, Not for use on ATV tires

Order No. 950-751

950-748 950-749 950-750

Standard Steel Tire Irons

Cold forged steel. Ideal for shop or home use. Tire Iron Set Includes one 8-1/2 inch tire iron, one 11 inch tire iron and one 16 inch double compound curved tire iron, and a vinyl storage pouch. Tire irons available separately. (Each)

Description	Order No.
Tire Iron Set	950-747
8-1/2" Tire Iron (each)	950-748
11" Tire Iron (each)	950-749
16" Tire Iron (each)	950-750

BeadPro Tire Bead Breaker and Lever Tool Set

Innovative multi-use tire tool set. Breaks the bead on most street and off road motorcycle tires. Integrated tire spoons for tire removal and installation. Light weight and compact size is perfect for tool packs. Ergonomic handles with cross-guard keep hand from riding forward. Forged 7075-T6 aluminum construction for strength and durability Black anodized finish. Patent pending.

Order No. 950-788

Spoke Wrenches

Chrome-vanadium tool steel with a hard nickel pewter finish, square end openings which grip the spoke nipple on all four sides, offset slotted ends make it easy and quick to use. Sold each.

Description	Order No.
6mm/6.3mm	950-753
6.5mm/6.8mm	950-754
5mm/7mm	950-755

Motion Pro Combination Fork Damper Tool

Designed to hold the damper rod during assembly & disassembly of Honda XR400's or Suzuki DR-Z400S. One end features spanner-type prongs for the XR400 and the other a 27mm hex for Suzuki. Hardened steel with black finish.

Order No. 950-473

Motion Pro Damper Rod Fork Tool

Aids in assembly and disassembly of most inverted Kayaba and Showa 41mm, 43mm, 46mm, and 47mm forks. Use one end for Kayaba forks and the other for Showa forks. (Not required for 91-92 Honda CR models) Hardened steel with black finish.

Order No. 950-474

Motion Pro Fork Seal Drivers

Manufactured from CAD-II plated carbon steel and features a split design. Each driver weighs approximately 25oz.
Sold individually.(Split as shown in photo) ***Made in U.S.A.***

Size	Order No.
39mm	950-392
41mm	950-393
43mm	950-394
45mm	950-395
46/47mm combo	950-396
48mm **New!!**	950-769
49/50mm combo	950-397

Fork Oil Level Gauge

For checking and adjusting the oil level on all conventional and single chamber cartridge forks, adjustable ring will measure oil levels from 0 to 300mm in 0.5cm increments, syringe has a capacity of 60ml, can be used on bicycles equipped with front suspension, also replaces HD tool HD-590000-B and Buell tool B-590000-B

Order No. 950-770

Seal Mate

Easy way to keep your fork seals clean and debris free. Extract dirt and debris trapped between fork seal and tube. Works on most conventional and up-side-down forks.

Order No. 950-399

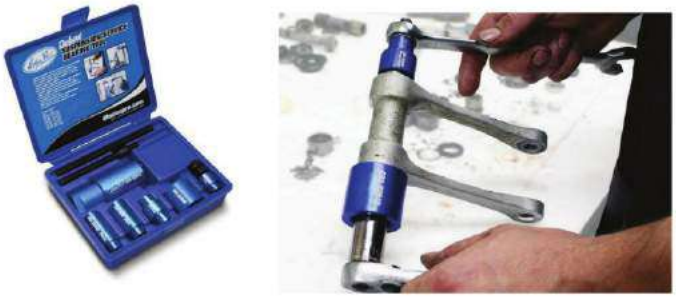

Deluxe Suspension Bearing Service Tool NEW

Designed for quick and easy removal and precise installation of suspension linkage and swing arm pivot bearings. For use on 20 & 22 mm id bearings. Fits most off-road motorcycles & ATV's. Includes blind bearing collet for removal of 20 mm blind bearings. Anodized aluminum mandrels reduce the possibility of damaging bearing surfaces. Laser etched markings for easy size identification. Eliminates the need for a shop press. Includes protective blow-molded case for easy storage. A must have time saving tool for professional technicians, serious racers and home mechanics.

Order No. 950-787

Flywheel Pullers

Motion Pro Flywheel Pullers

Sold each. Order by size needed or per applications listed.

Description	Notes	Motion Pro Reference	Order No.
M16mm x 1.5mm R.H.	Solid Puller Bolt	08-0027	950-467
M18mm x 1.5mm R.H.	Solid Puller Bolt	08-0116	950-468
M18mm x 1.5mm R.H	Solid Puller Bolt	08-0118	950-470
M20mm x 1.5mm R.H.	Solid Puller Bolt	08-0085	950-471
M20mm x 1.5mm R.H.	Hollow Puller Bolt	08-0086	950-472
M22mm x 1.5mm R.H.	Solid Puller Bolt	08-0074	950-469
27mm x 1.0mm L.H.	Puller Bolt with body	08-0026	950-466
M24mm x 1.5mm R.H	Puller Bolt with body	08-0257	950-767
M26mm x 1.0mm R.H.	Puller Bolt with body	08-0293	950-762
M28mm x 1.0mm R.H.	Puller Bolt with body	08-0425	950-739
M28mm x 1.0mm R.H.	Puller Bolt with body	08-0372	950-763
M30mm x 1.0mm R.H.	Puller Bolt with body	08-0386	950-766
M33mm x 1.5mm R.H.	Puller Bolt with body	08-0390	950-764
M35mm x 1.5mm R.H.	Puller Bolt with body	08-0349	950-765
M38mm x1.5mm R.H.	Puller Bolt with body	08-0306	950-760
M50mm x 1.5mm R.H.	Puller Bolt with body	08-0417	950-767
Disc with 6 bolts	w/handle & 6 Bolt Holes	08-0160	950-761

Honda/Kawasaki/KTM/Suzuki/Yamaha 27mm x 1.0mm L.H.

Motion Pro Reference 08-0026. Sold each.

Order No. 950-466

Honda

CR80R/CR80RB, CR85R/CR85RB, CR125R, CR250R, CR500R 2-stroke,XL/XR50/70/100/185, CRF50F, ATC70, ATC185/ATC250R, TRX90 all

Kawasaki

KX/KDX80/125/200/220/250/500 2-stroke and most external flywheel models, early point-type ignition

KTM

65SX (99-04), 85SX (2004), 105SX (2004), 200EXC/MXC (98-05) 125/250SX/EXC/MXC (98-05), 250/300/380 SX/EXC/MXC (97-05)

Suzuki

RM125 late model 1992 on (will not work on early model RM/TM), RM/RMX250 late model 1992 on, some DR series small bore

Yamaha

YFS200 Blaster, YFZ350 Banshee, YSR50, YZ400F 4-stroke, YFM80/YFM100/YFM200/YFM225, YT125/YT175

Honda/Kawasaki M20mm x 1.5mm R.H.

Hollow Puller Bolt. Motion Pro Reference 08-0086. Sold each.

Order No. 950-472

Honda

ATC250SX, ATC350X, TRX250/300/300FW, TRX300EX (93-05), TRX400EX (99-05), XR400R (96-04), CB400A/T (78-79), CM450, GL500/CX500, GL650/CX650, XR650R Offroad (00-07), PC800, VFR800 Interceptor

Honda/Kawasaki M20mm x 1.5mm R.H.

Solid Puller Bolt. Motion Pro Reference 08-0085. Sold each.

Order No. 950-471

Honda

FT/GB500, NT650 Hawk GT, NX650 (88-89), TL250, VF700C (84-86), VF700F/S, VF750C (82-83), VF750F/S, VF1000F/R, VF1100C/S, VFR700/750F (1986), VT500C/FT, VT600C/CD (88-89) and (91-96), VT600C/CD/CD2 (97-02), VT750C/CD/CD2, XL250/350/500/600, XR500, XR600R Offroad (85-00), XR650L Dual Sport (93-09)

Kawasaki

KL250 KLR (85-95), KL650A KLR (87-95)

Suzuki

SV650 (99-05), SV650S (99-05), GSX-R600 (97-00) GSX-R750 (96-99), DL1000K V-Storm (02-05), SV1000K (02-05) SV1000S (03-05), TL1000R (98-04), TL1000S (97-01) GSX1300R Hayabusa (99-05)

Honda/Kawasaki /Suzuki/Yamaha M16mm x 1.5mm R.H.

Motion Pro Reference 08-0027. Sold each.

Order No. 950-467

Honda

ATC90 all with point-type ignition, ATC110 with point-type ignition CB175, CB350G/CB360, CB500 twin, CM185/CM200 Twinstar, early CR125/CR250 Elsinore 2-stroke, SL175/SL350

Kawasaki

KH400A 2-stroke triple, KLF300 Bayou (86-87), KLT110/KLT200, KX125/KX250/KX420/KX500 pre-1981 models, Z1-900 (73-75), KZ1000 (77-80)

Suzuki

GS550/650/750 models with point-type ignition, early 1100 and most 4-stroke street models

Yamaha

Most 4-stroke applications, XJ550/XJ650/XJ750 Maxim & Seca, FZ600/FJ600, FZR600, TT225

Kawasaki Personal Watercraft M18mm x 1.5mm R.H.

Solid Puller Bolt. Allows you to pull flywheel without pulling motor from hull. Motion Pro Reference 08-0118. Sold each.

Order No. 950-470

Kawasaki

JH750A/E (92-96), JH750B/F (93-96), JH750C (95-96), JS750A (92-95), JS750B (95-96), JT750A (94-95), JT750B (95-96)

Honda M28mm x 1.0mm R.H. Internal Thread

Includes 12mm crankshaft protector cap. Replaces Honda OEM part numbers 070MC-HP10100 puller and 070MC-HP1A100 crankshaft protector cap. Motion Pro Reference 08-0425. Sold each.

Order No. 950-739

Honda

CRF450X (04-07) and TRX450R/ER (06-07)

Suzuki M50mm x 1.5mm R.H. Internal Thread

Includes crankshaft protector M16mm x P1.5mm. Motion Pro ref. 08-0417.

Order No. 950-767

Suzuki

LS650 Savage (87-07), VS1400 (87-07), GV1400 (86-87), VX800 (90-93), VS700 (1986), VS750 (88-91), VZR1800 (06-07), VL1500 (98-07), VS800 (92-95)

ATV

LT-A500F (00-07), LT-F500F (98-07), LTA-700X (05-07), LTA-450X (2007), LT-F400F (02-07), LTA-400F (02-07), LT-F400 (02-04), LT-A400 (02-04) and (2006)

Kawasaki/Yamaha M35 x 1.5mm R.H. Internal Thread

Motion Pro Reference 08-0349.

Order No. 950-765

Kawasaki

EX250E Ninja 250R (86-87), EX250F Ninja 250R (88-09)

Yamaha ATV

YFM350 (1997), YFM350ER (89-95), YFM350FAH (2004), YFM350FW (89-99), YFM350FX (95-96), YFM350S/RT (04-05), YFM350U (96-99), YFM350X (89-03), YFM350AS (04-05), YFM350FX (97-03), YFM350FXS (04-05), YFM350XS (04-05), YFM400A (00-02), YFM400F (96-99), YFM400FA (02-04), YFM400FAHS (04-05), YFM400FAT (2005), YFM400FM (2000), YFM400FS (04-05), YFM400FT (2005), YFM400FW (99-03), YFM400N (00-03), YFM400P (2001), YFM400S (04-05), YFM660F (02-06), YFM 700R (2006)

Honda/Kawasaki M22mm x 1.5mm R.H.

Solid Puller Bolt. Motion Pro Reference 08-0074. Sold each.

Order No. 950-469

Honda

VT600 Shadow VLX, VFR700/VFR750, XR500/XR600R/XR650L, VF700/VF750/VF1000F/VF1000R, VF1100C/S.

Kawasaki

KL600A/B KLR (84-86), KL650A KLR (96-06).

Kawasaki M18mm x 1.5mm R.H.

Solid Puller Bolt. Motion Pro Reference 08-0116. Sold each.

Order No. 950-468

Kawasaki

KLF110, KSF250 Mojave (96-00), KZ200/KZ250 all, EX250 Ninja all, KL250, KZ400/KZ440 all, EN500 all, EX500 all, KZ550/GPz550, ZX600 Ninja 600R, KZ650 78-83, ZX750 GPz, KZ750 4-cyl. all, KZ900, KZ1000, KZ1100, GPz1100, KZ1300

Honda M24mm x 1.5mm R.H. Internal Thread

Includes 12mm crankshaft protector cap. Replaces Honda OEM part numbers 070MC-MEBA100 puller, Kawasaki 57001-1565 and Suzuki K57001-11565-LPT. Motion Pro Reference 08-0257. Sold each.

Order No. 950-740

Honda

CRF150R (07-08), CRF250R/CRF250X (03-07), CRF450R (02-07)

Kawasaki

KX250F (04-07), KX450F (06-07)

Suzuki

RM-Z250 (04-06), RM-Z450 (05-06)

Yamaha

YZ450F (06-07)

Flywheel Pullers

Arctic Cat/Kawasaki/Suzuki M38mm x 1.5 R.H

Replaces OEM Suzuki tool 09930-31921-LPT. Motion Pro Ref.08-0306.

Order No. 950-760

Arctic Cat

DVX400 (04-07)

Kawasaki

KLX400 Offroad (2003), KSF400 ATV (03-06)

Suzuki

AN400K Burgman Scooter (03-07), DR-Z250 Offfroad (01-07), LT-Z90 Quad Sport (07-09), LT-Z250 Quad Sport (04-09), LT-F300F (99-01), DR-Z400 Offroad (01-06), DR-Z400E Offroad (00-07), DR-Z400S Dual Sport (00-09) and (11-12), DR-Z400SM Supermotard (05-09), LT-Z400 Quad Sport (03-09), LT-R450 Quad Racer (06-08)

KTM M26mm x 1.0mm R.H. Internal Thread

Replaces OEM tool 580.12.009.000. Includes 12mm shaft protector cap OE reference 510.12.016.000. Not applicable on older models with Motoplat ignition systems. Motion Pro Reference 08-0293.

Order No. 950-762

KTM

250 RFS, 250SX-F, 400, 450, 520, 525, 250, 300 two stroke with electric start

Honda/Kawasaki/Suzuki M28mm x 1.0mm R.H. Internal Thread

Replaces OEM Honda tool 070MC-HP1A100. Includes M14x1.25 shaft protector cap, OEM tool 070MC-HP1A110. Motion Pro Reference 08-0372.

Order No. 950-763

Honda

TRX450R (04-05), CR250R (78-80)

Kawasaki

KLX110 (03-07), Suzuki DRZ110 (03-05)

Yamaha/Kawasaki Flywheel Puller

Use for removal of magneto flywheel or starter gear on Kawasaki Jet Ski's. Includes three 6 x 25 mm and three 8 x 40 mm bolts. 8 mm bolt hole center is 27 mm to dead center and 6 mm bolt hole center is 49.15 mm to dead center. Also used for Yamaha models listed. Motion Pro Reference 08-0160.

Order No. 950-761

Kawasaki

Jet Ski - JS300/440/550

Yamaha

WR250F Offroad (01-02) and WR400F Offroad

Suzuki/Yamaha M33mm x 1.5mm R.H. Internal Thread

All steel construction, durable black oxide finish. Motion Pro Ref.08-0390.

Order No. 950-764

Suzuki

GSX-R600 (01-05), GSX-R750 (01-05), GSX-R1000 (01-05)

Yamaha

YFZ450 ATV (04-07), WR 450F (04-06)

Yamaha M30mm x 1.0mm R.H. Internal Thread

Replaces OEM Yamaha tool YM-04141. Motion Pro Reference 08-0386.

Order No. 950-766

Yamaha

WR250F (03-06)

KEIHIN CDKII Exploded View

Keihin CDKII

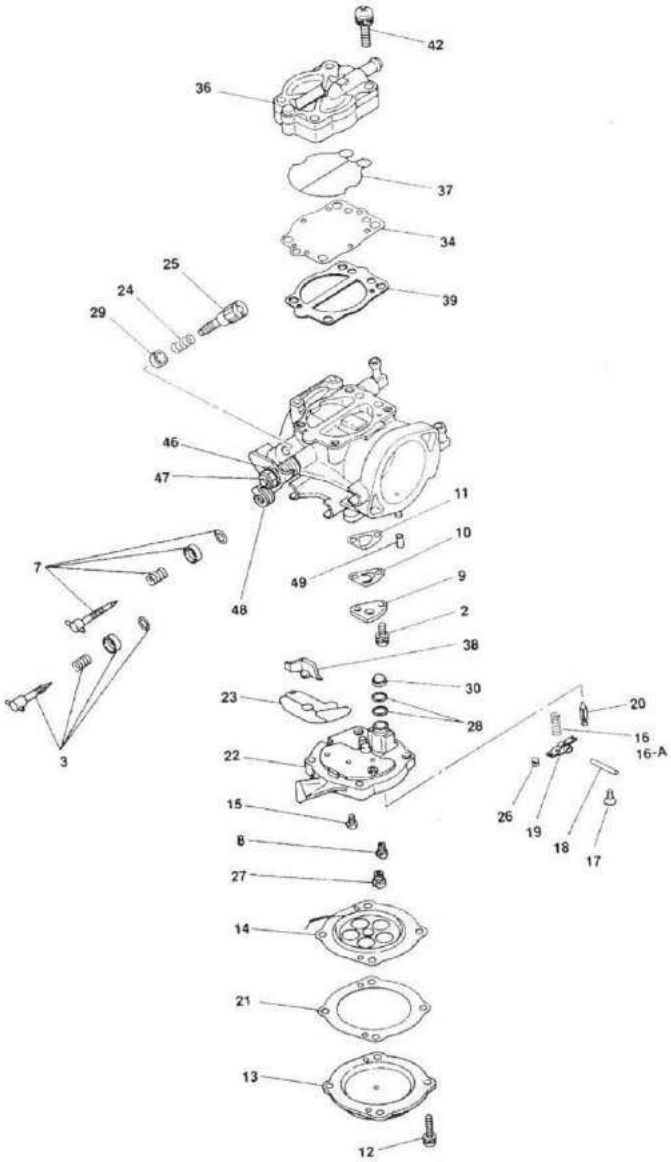

Keihin CDKII w/ Accelerator Pump

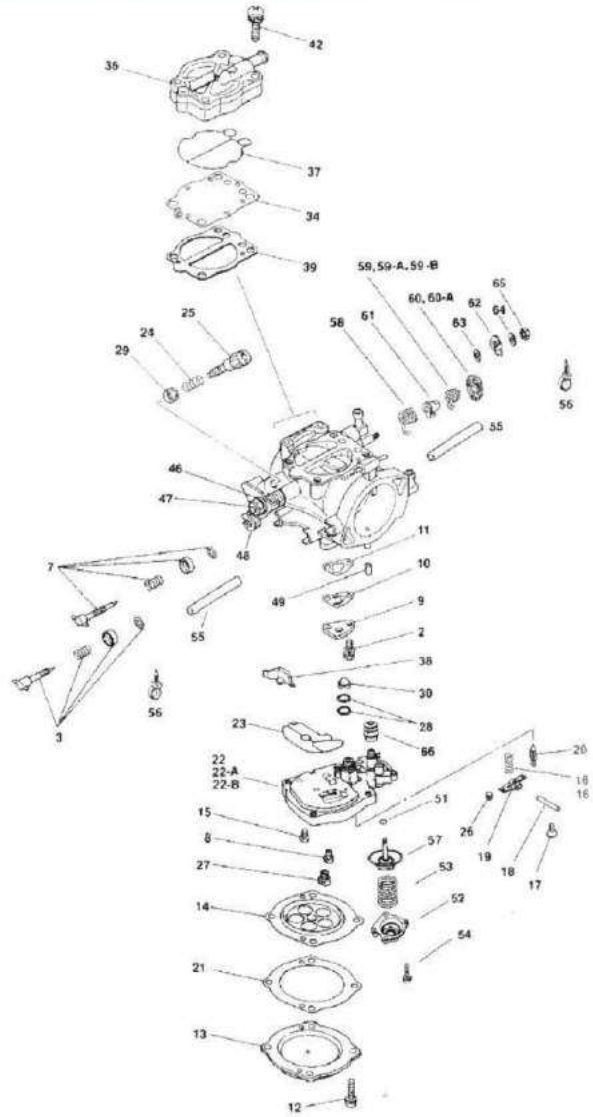

NOTE: Do not remove parts that are not shown on this exploded view.

Note: This exploded view is CDKII 42. NEVER try to remove parts which are not shown in this view.

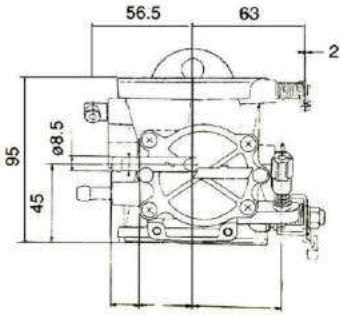

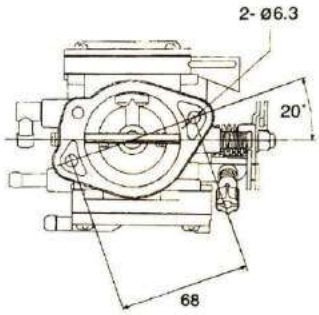

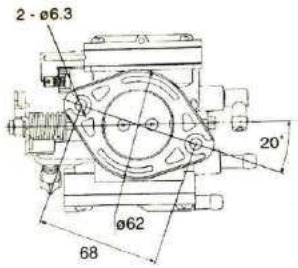

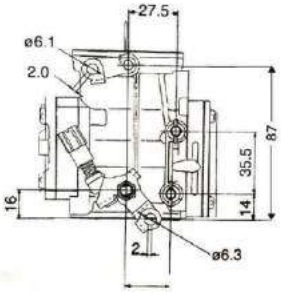

KEIHIN CDKII Parts

Keihin CDKII / Keihin CDKII w/ Accelerator Pump

No.	Description	Keihin No.	Order No	Keihin No.	Order No
2.	Screw	N114-03060	021-463	N114-03060	021-463
3.	Adjust Screw (Main)	Z014-0660	021-461	Z014-0660	021-461
7.	Adjust Screw (Slow)	Z014-0670	021-462	Z014-0670	021-462
8.	Slow Jet	N424-35-❑❑❑	Pg.513	N424-35-❑❑❑	Pg.513
9.	Plate	1090-823-2000	———	1090-823-2000	———
10.	Check Valve*	1242-809-2000*	———	1242-809-2000*	———
11.	Gasket*	1202-823-2000*	021-466	1202-823-2000*	021-466
12.	Screw	0135-828-1900	021-467	0135-828-1900	021-467
13.	Cover	1230-827-2000	———	1230-827-2000	———
14.	Diaphragm*	1201-813-2100*	021-469	1201-813-2100*	021-469
15.	Screw	93500-04008-1H	021-053	93500-04008-1H	021-053
16.	Coil Spring(70g)*	1290-947-2000*	021-450	1290-961-2000*	021-471
16A.	Coil Spring (40g)	1290-966-2000	021-451	1290-992-2000	021-472
17.	Screw	4114-001-1200	———	4114-001-1200	———
18.	Arm Pin	16152-KG8-9010-M1	———	16152-KG8-9010-M1	———
19.	Float Arm	1054-823-2000	021-475	1054-823-2000	021-475
20	Needle Valve*	1062-818-2000	018-679	1062-818-2000	018-679
21.	Gasket*	1202-822-2000*	021-476	1202-822-2000*	021-476
22.	Jet Block 1.6 VS	1605-829-2101-1.6	———	1605-853-2101-1.6	———
22A.	Jet Block 1.8 VS	1605-829-2101-1.8	———	1605-853-2102-1.8	———
22B.	Jet Block 2.0 VS	1605-829-2101-2.0	———	1605-853-2102-2.0	021-436
23.	U-Ring*	0903-809-6000*	———	0903-809-6000*	———
24.	Coil Spring	1290-050-2000	———		
25.	Stop Screw	1034-824-7000	———		
26.	Lever Pin	1480-049-2004	021-480		
27.	Main Jet	N424-36-❑❑❑	Pg.513		
28.	O-Ring	0901-055-6000*	———		
29.	Collar	1118-935-7000	———		
30.	Screen*	2009-811-2100	———		
34.	Diaphragm*	1201-825-2000*	021-470		
36.	Fuel Pump Comp.	1000-983-0400	———		
37.	O-Ring*	0901-841-6000*	021-488		
38.	Collar	1118-964-7000	———		
39.	Gasket*	1202-851-2000*	021-477		
42.	Screw	4129-826-1900	———		
46.	Spring Washer	0303-801-1000	———		
47.	Locknut	0208-807-1000	———		
48A.	Thr. Lever A	1026-952-2000	021-455		
48B.	Thr. Lever B	1026-949-2001	021-456		
48C.	Thr. Lever C	1026-951-2000	021-457	1026-951-2000	021-457
48D.	Thr. Lever D	1026-950-2000	021-458	1026-950-2000	021-458
49.	Cap	1096-047-2001	———	1096-047-2001	———
50.	Screw	4110-812-1000	———	4110-812-1000	———
51.	U-Ring	N/A	———	W9353-40000	021-495
52.	Cover, Accp.	N/A	———	1230-845-2000	———
53.	Coil Spring, Accp	N/A	———	1290-987-2000	———
54.	Screw, Accp.	N/A	———	0135-823-1000	———
55.	Rubber Hose	N/A	———	0804-A81-0000	021-205
56.	Zip Tie	N/A	———	W3756-001-9900	———
57.	Diaphragm Comp, Accp.	N/A	———	1201-829-2102	———
58.	Coil Spring, Accp.	N/A	———	1305-A06-2000	021-501
59.	Coil Spring, Accp. Cam	N/A	———	1305-990-2000	021-502
59A.	Coil Spring, Accp. Cam	N/A	———	1305-991-2000(+80%)	021-503
60.	Accp. Cam	N/A	———	1100-886-7000	———
60A.	Accp. Cam	N/A	———	1100-889-7000	———
				(-20% volume)	———
61.	Collar	N/A	———	1118-A11-7000	———
62.	Plate	N/A	———	1026-986-2000	———
63.	Plain Washer	N/A	———	0301-862-1000	———
64.	Spring Washer	N/A	———	0303-801-1000	———
65.	Nut	N/A	———	0208-801-1000	021-510
66.	Boots	N/A	———	1028-054-7000	021-511

* Included in rebuild kit 025-625
Order 1 per carb.
Note: This rebuild kit fits all CDKII 28 or OEM Kawasaki and aftermarket carbs. There may be extra parts in the kit depending upon the origin of your particular carburetor unit.

* Included in rebuild kit 025-627
Order 1 per carb
Note: This rebuild kit fits all CDKII 38, 40, 42 carbs for OEM Kawasaki and aftermarket carbs. There may be extra parts in the kit depending upon the origin of your particular carburetor unit.

Calibration Chart (for CDK II)

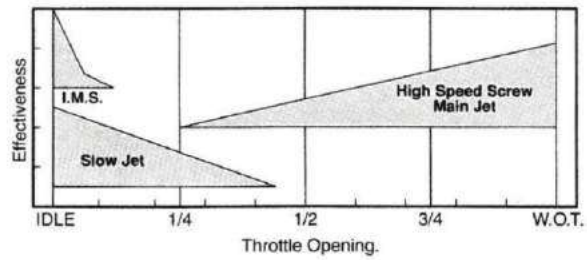

Throttle Linkages

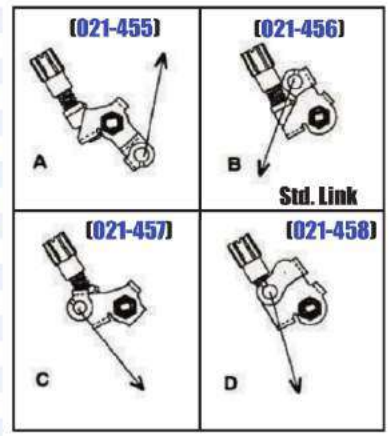

NOTE: The arrows show you throttle cable direction.

CDK Carburetor Rebuild Kits

Includes all parts necessary to completely rebuild the Keihin CDK carburetors to factory specifications. ***Made in Japan.***

Description	Order No.
CDK28mm	025-625
CDK38, 40, 42mm	025-627

Fuel Pump Rebuild Kit

Includes all parts necessary to completely rebuild the Keihin Fuel Pump to factory specifications. Replaces internal parts (gaskets, diaphragms and check valves) on Kawasaki 49040-3706 Fuel Pump. ***Made in Japan.*** See model application listing below for Kawasaki Jet Ski Watercraft.

Order No. 020-310

Kawasaki Personal Watercraft

Model	Year
JB650A1/A2 Jet Mate	89-90
JF650A1/A2/A3/A4/A5 X2	86-90
JF650B1/B2 Tandem Sport (TS)	89-90
JS650A1/A2/A3/A4 SX	87-90

N424-35-xxx Slow Jet

N424-36-xxx Main Jet

N424-35-XXX Slow jets

Nickel plated slow jets to prevent corrosion.
Applications: CDK, CDKII 38 & 42 Watercraft Carburetors, **Kawasaki** OEM Jet-Ski with CDK carburetors.

Size	Order No.	Size	Order No.	Size	Order No.
#50	019-630	#75	019-640	#100	019-650
#52	019-631	#78	019-641	#102	019-651
#55	019-632	#80	019-642	#105	019-652
#58	019-633	#82	019-643	#108	019-653
#60	019-634	#85	019-644	#110	019-654
#62	019-635	#88	019-645	#112	019-655
#65	019-636	#90	019-646	#115	019-656
#68	019-637	#92	019-647	#118	019-657
#70	019-638	#95	019-648	#120	019-658
#72	019-639	#98	019-649		

N424-36-XXX Main Jets

Nickel plated main jets to prevent corrosion.
Applications: Keihin CDK, CDKII 38 & 42 Watercraft Carburetors. OEM **Kawasaki** Jet-Ski with CDK carburetors.

Size	Order No.	Size	Order No.	Size	Order No.
#100	019-580	#132	019-593	#165	019-606
#102	019-581	#135	019-594	#168	019-607
#105	019-582	#138	019-595	#170	019-608
#108	019-583	#140	019-596	#172	019-609
#110	019-584	#142	019-597	#175	019-610
#112	019-585	#145	019-598	#180	019-612
#115	019-586	#148	019-599	#185	019-614
#118	019-587	#150	019-600	#190	019-615
#120	019-588	#152	019-601	#195	019-616
#122	019-589	#155	019-602	#200	019-617
#125	019-590	#158	019-603		
#128	019-591	#160	019-604		
#130	019-592	#162	019-605		

Pop-Off Pressure Chart

Spring Force	Spring Length	Needle Valve Size (mm) 1.6 (Std)	1.8	2.0
70gr. (std)	11mm	24psi	21psi	18psi
40gr.	9.7mm	15psi	13psi	11psi

Choke Shaft Block-Off

CDKII choke plate block off.

Order No. 021-440

MIKUNI Super BN Carburetors

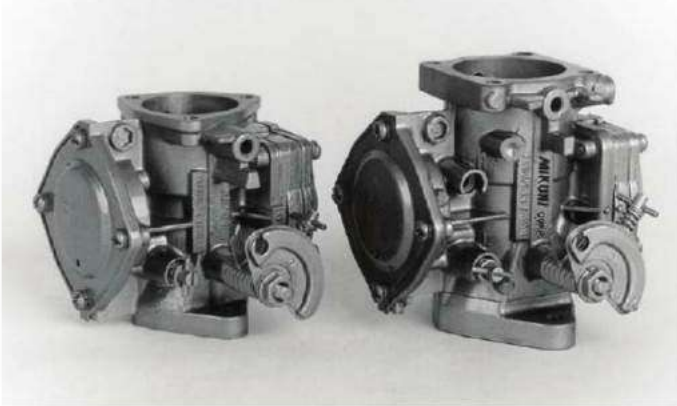

Super BN Series Square Pump Type Carburetors

Super BN series carburetors feature improved air flow, higher capacity fuel pump, externally adjustable metering screws and replaceable fixed jets for easy high and low speed tuning. Special needle valves and springs give optimum pop-off pressure. ***Made in Japan.***

Performance 44mm single BN44-40-8067 **001-096**

For most sit-down models requiring larger jets. Features a 2.5 viton tip needle valve, #120 pilot (slow) jet, #140 main (high) jet, primer fitting and owners manual. (No butterfly choke)

Performance 38mm single BN38-34-8113 **001-091**

Replaces most standard BN or Super BN carbs. Features a 2.0 viton tip needle valve, #65 pilot (slow) jet, #107.5 main (high) jet, primer fitting and owners manual. (No butterfly choke)

Pro Racing Super BN46 Series Carburetor

Designed to give Pro Level Racing performance. Features a viton 2.5 needle valve, #120 pilot (slow) jet, #150 main (high) jet, primer type cold starter fitting, angled fuel fittings and owners manual. (No butterfly choke) ***Made in Japan.*** **Note: Bolt pattern is same as BN44, some porting may be necessary for maximum air flow.**

Performance 46mm Single BN46-42-8002 **001-099**

Photo courtesy of Pro-Tec

Sudco Mikuni Tuning Manual

This 92 page manual includes exploded parts views, parts listings and optional parts. Guides you through tuning and trouble shooting for the popular lines of Mikuni Carburetors. The definite reference for Mikuni Carburetors and a must for any do-it-yourself type. Sold each.

Order No. 002-999

Mikuni Pocket Tuner

A handy pocket-sized calculator which can be used to determine required jetting changes in Mikuni carburetors due to climate and temperature changes. The Pocket Tuner is applicable to both single and multi-carburetor applications on 2-stroke and 4-stroke engines. It also has a guide for determining lean or rich carburetor conditions.

Order No. 002-430

Mikuni Fuel Pumps & Rebuild Kits

DF44-211 DF52-136 DF52-21 DF52-73 DF52-92 DF62-702

Mikuni Pulse Fuel Pumps

Mikuni Pulse Fuel Pumps employ an engine's fluctuating engine crankcase pressure to pump fuel from a remote fuel tank to an engine's carburetor(s). Applications include Personal Watercraft and Snowmobiles. Sold each.

Mikuni No.	Number of Outlets	Style	Mounting	Flow Rate Liter/Hour	Order No. Fuel Pump	Order No. Rebuild Kit
DF44-211 (DF44-227)	1	Square	Flush	14	002-220	002-225
D52-21 (DF52-176)	2	Round	Bracket	35	002-221	002-223
DF52-73	2	Round	Flush	35	002-228	002-223
DF52-92	3	Round	Flush	35	002-229	002-223
DF52-136	2	Square	Flush	31	002-222	———
DF62-702	2	Pentagon	Flush	65	002-227	002-226

002-225

002-223

002-226

Mikuni Fuel Pump Rebuild Kits

Sold in kits. See contents listing for parts in each kit.

Mikuni Kit No. MK-DF44 **Order No. 002-225**

Fits DF44 Fuel Pump.

Contents	Description	Qt.	Remarks
CW2=0416	Screw	4	with lock washer
DF44-201/03	Gasket	1	Fiber
DF44-201/04	Diaphragm	1	Clear
DF44-201/05	Membrane	1	Thin Rubber

Mikuni Kit No. MK-DF52 **Order No. 002-223**

Fits ALL DF52 Fuel Pumps except DF52-136.

Contents	Description	Qt.	Remarks
DF52-105	Gasket	1	Thick Fiber
DF52-48/10	Diaphragm	2	Transparent Film
DF52-48/05	Gasket	1	Thin Rubber
DF52/113	Gasket	1	Thin Rubber
DF52/36A	Gasket	1	Thick Fiber
DF52/27A	Valve	2	Clear
DF44/26	Grommet	2	Black

Note: Fuel Pump Rebuild Kit for DF52-136 is not available.

Mikuni Kit No. MK-DF62 **Order No. 002-226**

Fits DF62 Fuel Pump

Contents	Description	Qt.	Remarks
DF62-601/03	Gasket	2	Paper Gasket
DF62-601/04	Diaphragm	2	Clear
DF62-701/03	Gasket	2	Paper Gasket
DF62-701/05	Check Valve	2	Clear Grommet

Mikuni Electric Fuel Pump

High efficiency, small size, low energy consumption electrical inline fuel pump.

Order No. 007-850

K&N Inline Fuel Pump

Provides premium quality fuel system hardware with a universal design that fits a wide variety of applications. Compatible with diesel, biodiesel, gasoline, E85, methanol, ethanol, alcohol and other fuels. For use with 5/16 inch fuel lines.

Order No. 006-001

MIKUNI BN Carburetor Parts & Accessories

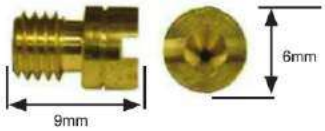

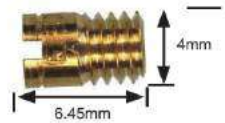

High Speed Jets N102.221

Applications: Personal Watercraft (High Speed Jets)
Super BN 38, BN44, BN46, BN38I, BN40I, BN44I, BN46I

Size	Order No.	Size	Order No.	Size	Order No.
#30	004-333	#92.5	004-282	#155	004-307
#32.5	004-334	#95	004-283	#157.5	004-308
#35	004-335	#97.5	004-284	#160	004-309
#37.5	004-336	#100	004-285	#162.5	004-310
#40	004-337	#102.5	004-286	#165	004-311
#42.5	004-338	#105	004-287	#167.5	004-312
#45	004-339	#107.5	004-288	#170	004-313
#47.5	004-340	#110	004-289	#172.5	004-314
#50	004-255	#112.5	004-290	#175	004-315
#52.5	004-256	#115	004-291	#177.5	004-316
#55	004-267	#117.5	004-292	#180	004-317
#57.5	004-268	#120	004-293	#182.5	004-318
#60	004-269	#122.5	004-294	#185	004-319
#62.5	004-270	#125	004-295	#187.5	004-320
#65	004-271	#127.5	004-296	#190	004-321
#67.5	004-272	#130	004-297	#195	004-323
#70	004-273	#132.5	004-298	#200	004-325
#72.5	004-274	#135	004-299	#205	004-326
#75	004-275	#137.5	004-300	#210	004-327
#77.5	004-276	#140	004-301	#215	004-328
#80	004-277	#142.5	004-302	#220	004-329
#82.5	004-278	#145	004-303	#230	004-330
#85	004-279	#147.5	004-304	#240	004-331
#87.5	004-280	#150	004-305		
#90	004-281	#152.5	004-306		

Slow Speed Jets N100.606

Applications: Slow Speed Jet on BN Personal Watercraft Carburetors.
Super BN 38, BN44, BN46, BN38I, BN40I, BN44I, BN46I

Size	Order No.	Size	Order No.	Size	Order No.
#30	004-442	#75	004-460	#120	004-478
#32.5	004-443	#77.5	004-461	#122.5	004-479
#35	004-444	#80	004-462	#125	004-480
#37.5	004-445	#82.5	004-463	#127.5	004-481
#40	004-446	#85	004-464	#130	004-482
#42.5	004-447	#87.5	004-465	#132.5	004-483
#45	004-448	#90	004-466	#135	004-484
#47.5	004-449	#92.5	004-467	#137.5	004-485
#50	004-450	#95	004-468	#140	004-486
#52.5	004-451	#97.5	004-469	#142.5	004-487
#55	004-452	#100	004-470	#145	004-488
#57.5	004-453	#102.5	004-471	#147.5	004-489
#60	004-454	#105	004-472	#150	004-490
#62.5	004-455	#107.5	004-473	#152.5	004-493
#65	004-456	#110	004-474	#155	004-491
#67.5	004-457	#112.5	004-475	#157.5	004-494
#70	004-458	#115	004-476	#160	004-492
#72.5	004-459	#117.5	004-477		

Throttle Shaft Rebuild Kits

Kits include butterfly valve, shaft seals, screws and instructions.

Carb Size	Mikuni No.	Order No.
BN38	MK-BN038TV	007-335
BN44	MK-BN044TV	007-336
BN46	MK-BN046TV	007-337

MIKUNI BN (Round Pump Carb Type)

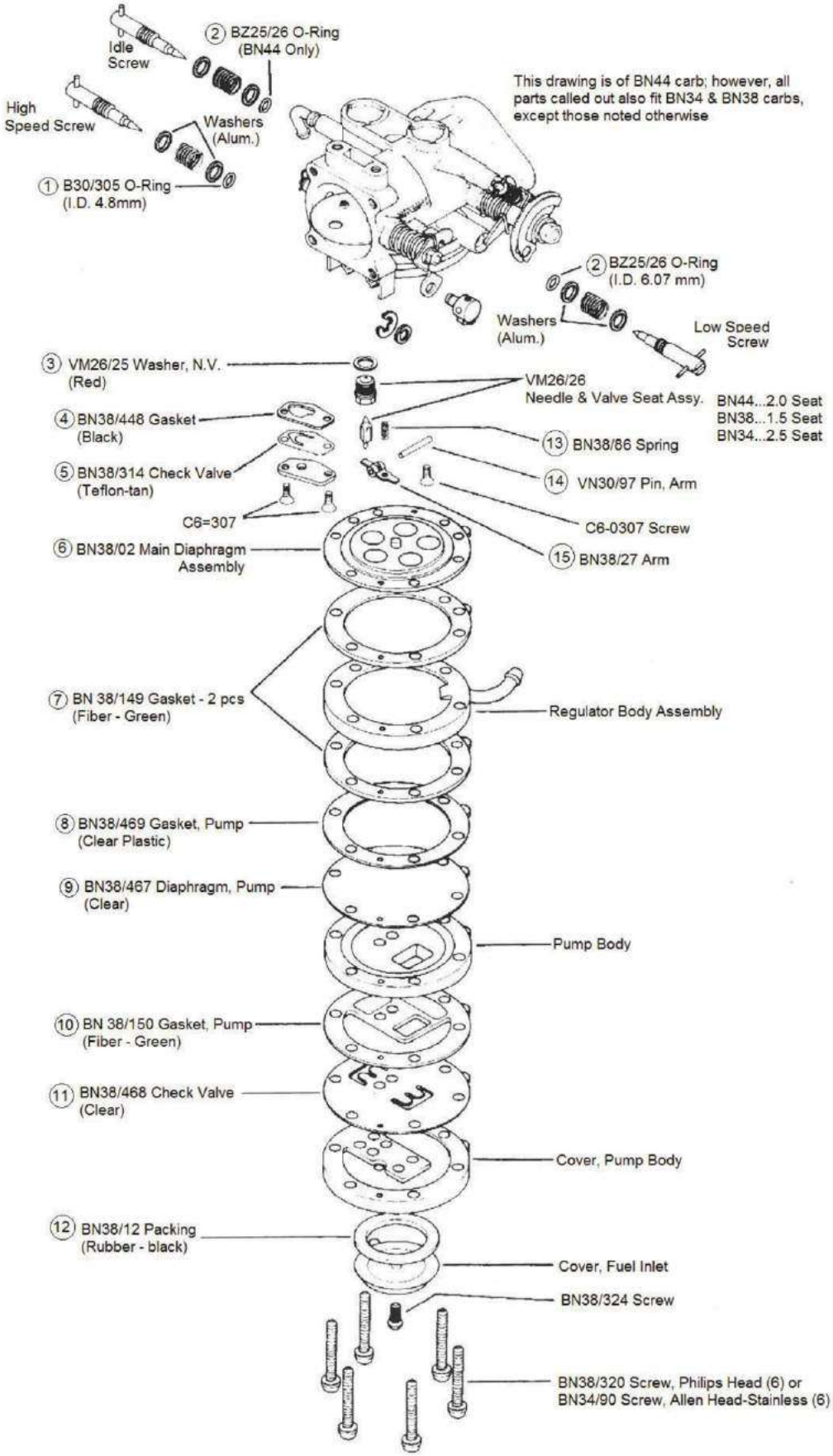

MIKUNI BN (Round Pump Carb Type)

BN38/44 Carburetor Rebuild Kit

For Standard Round BN carburetor. Kit includes genuine Mikuni parts, items 1 - 15 from drawing to rebuild one carburetor body.
Needle Valve not included in kit. ***Made in Japan.***

Mikuni No. MK-BN38/44 **Order No.** 025-650

Application: BN34, BN38 & BN44 Round Pump Carburetor.

Application, Kawasaki: JS300A SX (87-91), JS300B (86-88), JS440A3-A14 (77-90)

Application, Yamaha: WJ500 Wave Jammer (87-89), WR500 Wave Runner (87-89)

Needle Valve Sets for BN34/38/44

Genuine Mikuni replacements. Set includes metal tip needle valve and screw-in type needle valve seat. **Washer not included, Use 002-188.**

Size	Mikuni No.	Order No.
1.0	VM26/26-1.0	002-230
1.2	VM26/26-1.2	002-234
1.5	VM26/26-1.5	002-231
1.5	VM26/185-1.5 (Viton Tip)	002-232
2.0	VM26/26-2.0	002-189
2.5	VM26/26-2.5	002-190
2.8	VM26/26-2.8	002-191
	VM26/25 - Washer	002-188

Needle Valve Upgrade Kit for BN38/44

Kit includes 2.5 needle valve seat with viton tip needle valve, 65 gram spring, and washer for 14 lbs. "Pop off".

Mikuni No. MK-BN38/44NV **Order No.** 007-330

Photo courtesy of Pro-Tec

Needle Valve Sets with Viton Tip for BN38/44

Genuine Mikuni replacements. Set includes viton tip needle valve with clip and screw-in type needle valve seat.
Washer not included, Use 002-188.

Size	Mikuni No.	Order No.
1.5	786-15005-1.5	002-890
2.0	786-15005-2.0	002-891
2.5	786-15005-2.5	002-892
	VM26/25 - Washer	002-188

Super BN Carburetor Rebuild Kit (see next page)

MK-BN38/44SPR - For Super BN38, BN44, and BN38I, BN40I Square Pump Styles. **Rebuild Kit includes parts 1 through 16 to rebuild one carburetor.**

No.	Description	Mikuni No.	Order No.
1.	Gasket, Pump (Black Fiber) **(2)**	BN38/547	———
1A.	O-Ring, Pump Body	616-72001	———
2.	Diaphragm, Pump (Clear)	BN34/97	———
3.	Check Valve (Clear) **(2)**	BN34/124	———
4.	Grommet, Check Valve **(2)**	BN34/125	———
5.	Diaphragm, Damper (Black Rubber) **(BN44 only)**	BN34/100	———
5A.	Diaphragm, Damper (Black Rubber) **(BN38 and later BN44)**	BN34/129	———
6.	Gasket, Damper (Black) **(BN44 only)**	BN34/100	———
6A.	O-Ring **(BN38 and later BN44)**	616-92007	———
7.	Filter	BN44/146	———
8.	O-Ring, Hi Speed	B30/305	———
9.	O-Ring, Low Speed	MD12/16	———
10.	O-Ring, Needle Valve	KV/10	002-709
11.	Gasket, Valve Body	BN34/123	———
12.	Check Valve (Clear)	BN34/107	007-492
13.	Spring, Arm (115 grams)	730-03027	007-323
14.	Pin, Arm	VM30/97	———
15.	Arm (Stainless)	BN38/534	———
16.	Diaphragm Assembly, Main	BN44/145	007-307

Super BN Replacement Parts

(Items 17-43 shown for reference only. Not included in Rebuild Kit)

17.	Screw with Washer, Stainless (4)	BN34/120-30	007-302
18	Cover, Pump (Unpainted)	BN34/95B	007-310
	Cover, Pump (Black)	999-642-002-1A	007-311
	Cover, Pump (Silver)	999-642-002-1B	007-312
	Cover, Pump (Red)	999-642-002-1C	007-313
18A	Fuel Pump Block Off Plate	BN34/126	007-309
19.	Body Assembly, Pump **(BN44 only)**	BN34/98	———
19A	Body Assembly, Pump **(BN38 and later BN44)**	BN34/128	———
20	Stop Screw, Idle **(BN44 only)**	BN34/109	———
20A	Stop Screw, Idle **(BN38 and later BN44)**	BN34/82	———
21.	Washer, (Aluminum)	BN38/39	007-304
22.	Spring, Idle **(BN44 only)**	BN38/341	007-491
22A	Spring, Idle **(BN38 and later BN44)**	BN38/344	007-316
23.	Cap **(BN44 only)**	BN26/03	———
23A.	Cap with Tab **(BN38 and later BN44)**	BN44/118	———
24.	Adjuster, Hi Speed	604-25017	007-315
24A	Adjuster, Hi Speed	BN44/167	———
25.	Spring, Hi Speed	BN38/344	007-316
26.	Washer, Hi Speed (Aluminum)	BN38/39	007-304
27.	Washer, Low Speed (Aluminum)	BN38/172	007-305
28.	Spring, Low Speed	BN38/343	007-318
29.	Adjuster, Low Speed **(BN44)**	604-26008	007-317
29A.	Adjuster, Low Speed **(BN38 and later BN44)**	BN38/477	———
29B	Adjuster, Low Speed	BN38/166	———
30.	Cap	BN44/118	———
31.	Needle Valve Assembly	786-35015-1.5	002-880
	(See next page for additional sizes)		
32	Spring Clip, N.V.	VM15/285	———
33.	Plate, N.V. Retainer	BN34/117-GG	———
34.	Screw with Washer	CW2=0307-G	007-494
35	Jet, Slow Speed	N100.606	Pg.516
36.	Jet, High Speed	N102.221	Pg.516
37.	Screw	BV15/121-05-GG	———
38.	Plate, Valve	BN34/108-GG	———
39.	Valve Body Assembly	BN44/165	———

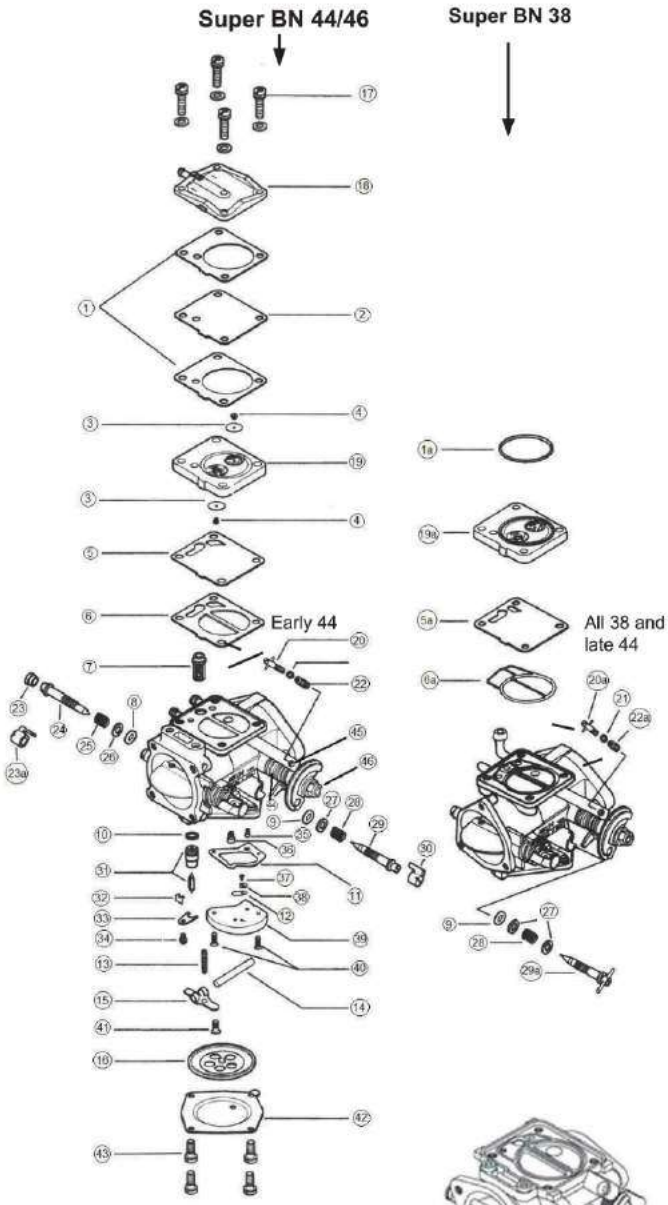

Block Off Plate - BN34/126
Primer Fitting - VM34/181
90∫ Elbow - DF44 - 2/70

BNI Carb Body

No.	Description	Mikuni No.	Order No.
40.	Screw, 4 x 14mm	C5-0414-G	007-493
41.	Screw, 3 x 8mm	C6-0308-G	007-300
42.	Cover, Stainless	BN44/147	———
43.	Screw with Washer, Stainless **(4)**	MCWS-0512	007-270
44.	Spring (not shown in drawing)	BN34/110	———
45.	Bushing	BN34/111	———
46.	Nut	B40I/35	———

MIKUNI Super BN (Square Carb Type)

Super BN38/44 -SPR Carburetor Rebuild Kit

Kit includes genuine Mikuni parts, items 1 - 16 from drawing to rebuild one carburetor body. **Does not include Needle Valve.** ***Made in Japan.***

Mikuni No. MK-BN38/44, **Order No.** 025-651

Application: Super BN38, BN44, BN46 with square diaphragm cover, BN38I, BN40I with square diaphragm cover, Kawasaki 750 series 98-02.

Needle Valve Sets for Super BN38/44/46

Genuine Mikuni replacements. Set includes solid needle valve with viton tip and clip, needle valve seat and o-ring.

Size	Mikuni No.	Order No.
1.5	786-35015-1.5	002-880
1.8	786-35015-1.8	002-884
2.0	786-35015-2.0	002-881
2.3	786-35015-2.3	002-882
2.5	786-35015-2.5	002-883
	VM26/25 - Washer	002-188

007-320

007-321

007-322

007-797

Pop-Off Pump

Mikuni's Pop-Off pump features a precision dial gauge. This allows accurate testing and adjustment of pop-off spring pressure.
Sold each. Order by gauge reading needed.

Description	Mikuni Reference	Order No.
30 lb. Gauge	MK-BN-PMP30	002-994
100 lb. Gauge	MK-BN-PMP100	002-993

Needle Valve Arm Springs

Available in different spring rates to vary pop-off pressure.

Description	Color	Mikuni No.	Order No.
65 Grams	Shiny Silver	730-03030	007-320
80 Grams	Black	730-03033	007-321
95 Grams	Dull Silver	730-03027-T	007-322
115 Grams	Shiny Silver		007-323
	Shiny Silver	730-12009	007-797

Photo courtesy of Pro-Tec

Tuning Components for Super BN

Pilot (Slow Speed) Jets

N100.606 Sizes 50 through 150 in increments of 2.5

Main (High Speed) Jets

N102.221 Sizes 50 through 200 in increments of 2.5

Needle Valve Assembly

786-35015 Sizes 1.5, 1.8, 2.0, 2.3, and 2.5

BN46I Carburetor Rebuild Kit

MK-BN46I and MK-BN44I Yamaha - See next page for models.

Rebuild Kit includes parts 1 through 18.

No.	Description	Mikuni No.	Order No.
1.	Gasket, Pump	BN46I/13	———
2.	Diaphragm, Pump (Clear)	BN46I/14	———
3.	O-Ring	616-73002	———
4.	Check Valve **(2)**	BN46I/11	———
5.	Grommet **(2)**	BN34/125	———
6.	Diaphragm, Damper	BN46I/34	———
7.	Diaphragm, Damper (Clear)	BN46I/15	———
8.	O-Ring	616-73003	———
9.	Filter, Fuel	BN44/146	———
10.	O-Ring, Hi Speed (2)	B30/305	———
11.	O-Ring, Low Speed	MD12/16	———
12.	O-Ring, Needle Valve	KV/10	002-709
13.	Gasket, Valve Body	BN34/123	———
14.	Check Valve (Clear)	BN34/107	007-492
15.	Pin, Arm	VM30/97	———
16.	Spring, Arm (95 grams)	730-03034	———
17.	Arm (Stainless)	BN38/534	———
18.	Diaphragm Assembly, Main	BN44/145	007-307

BN46I Replacement Parts

(Items 19-42 shown for reference only. Not included in Rebuild Kit.

19.	Screw with Washer **(4)****	BN34/120-35	———
	(see **Tightening Torque)		
20	Cover, Pump	BN46I/xx	———
21.	Body Assembly, Pump	BN46/49	———
22.	Stop Screw, Idle	BN38I/40	———
23.	Washer, Aluminum, **(3)**	BN38/39	007-304
	Hi Speed **(1)** and Stop Screw **(2)**		
24.	Spring **(2)**	BN38/344	———
25.	Cap, Hi Speed Adjuster	999-904-006	007-316
26.	Adjuster, Hi Speed	604-25017	007-315
27.	Washer, Low Speed (Aluminum) **(2)**	BN38/172	007-305
28.	Spring, Low Speed	BN38/343	007-318
29.	Adjuster, Low Speed	BN38/477	———
30.	Jet, High Speed	N102.221	Pg.516
31.	Jet, Slow Speed	N100.606	Pg.516
32	Screw	BV15/121-05-GG	———
33.	Plate, Valve	BN34/108-GG	———
34.	Valve Body Assembly	BN44/165	———
35	Screw 4 x 14mm **(2)**	C5=0414-G	007-494
36.	Needle Valve Assembly	786-35018-1.8	002-884
	(see next page for additional sizes)		
37.	Plate, Needle Valve Retainer		
38.	Screw with Washer 3 x 7mm	CW2=0307-G	007-493
39.	Screw 3 x 8mm	C6=0308-G	007-300
40.	Cover (Stainless)	BN44/147	———
41.	Screw, 5 x 14mm **(4)** **	C2S=0514	007-625
	(see **Tightening Torque)		
42.	Diaphragm, Accelerator Pump	BN40I/22	———

****Tightening Torque:**
Part No. 19: 4.5 N/m (45 Kg/Cm)
Part No. 41: 3.5 N/m (35 Kg/Cm)

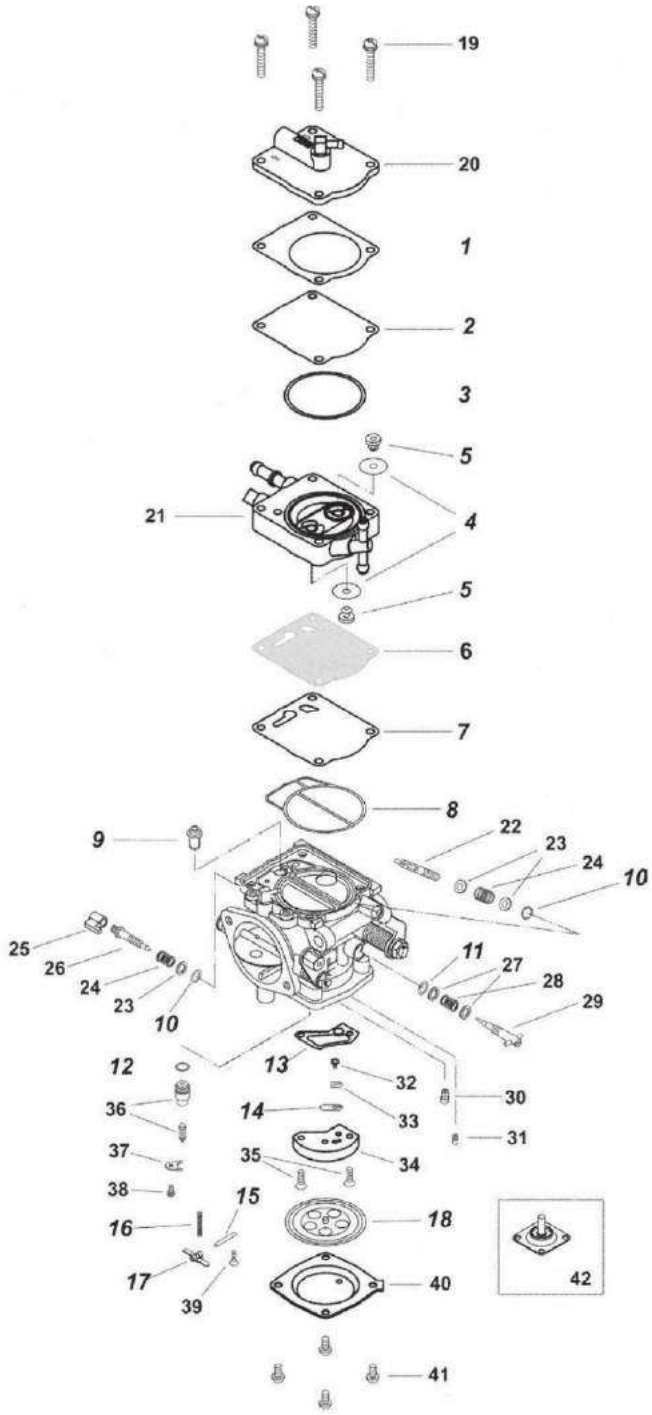

MIKUNI BN46I (Square Carb Type)

BN46I Carburetor Rebuild Kit

Kit includes genuine Mikuni parts, items 1 - 18 from drawing to rebuild one carburetor body. **Does not include Needle Valve.** ***Made in Japan.***

Mikuni No. MK-BN46I **Order No.** 025-654

Application: Super BN46I with square diaphragm cover, Sea-Doo models (1998 and newer) with dual carbs.

BN44I Carburetor Rebuild Kit for Yamaha

Kit includes genuine Mikuni parts, items 1 - 18 from drawing to rebuild one carburetor body. **Does not include Needle Valve.** Yamaha watercraft applications. ***Made in Japan.***

Mikuni No. MK-BN44I **Order No.** 025-653

Application: Super BN44I - Yamaha models with square diaphragm cover. GP800 (98-99), GP800R (00-04), XL800 (02-04), XLT800 (02-04), GP1200R (00-02), XL1200 Limited (99-00), XLT1200 (01-04)

Pop-Off Pump

Mikuni's Pop-Off pump features a precision dial gauge. This allows accurate testing and adjustment of pop-off spring pressure. Sold each. Order by gauge reading needed.

Description	Mikuni Reference	Order No.
30 lb. Gauge	MK-BN-PMP30	002-994
100 lb. Gauge	MK-BN-PMP100	002-993

Needle Valve Sets for BN46I

Genuine Mikuni replacements. Set includes solid needle valve with viton tip and clip, needle valve seat and o-ring.

Size	Mikuni No.	Order No.
1.5	786-35018-1.5	002-900
1.8	786-35018-1.8	002-897
2.0	786-35018-2.0	002-898
2.5	786-35018-2.5	002-899

Tuning Components for BN46I

Pilot (Slow Speed) Jets

N100.606 Sizes 50 through 150 in increments of 2.5

Main (High Speed) Jets

N102.221 Sizes 50 through 200 in increments of 2.5

Needle Valve Assembly

786-35018 Sizes 1.5, 1.8, 2.0, 2.3, and 2.5

Sudco 7.5mm Valve Adjustment Shim Kits

Sudco shims are OEM specific dimensions for proper fitments. (7.47mm - 7.49mm) Available in shop kit and individual sizes. Individual sizes sold each. ***Made in Japan.***

7.5mm Diameter Dealer Shim Kit 1.35mm - 2.15mm (total 34 shims)
Order No. 035-001
Includes storage box and qt 2 each size of the following:
1.35, 1.40, 1.45, 1.50, 1.55, 1.60, 1.65, 1.70, 1.75, 1.80, 1.85
1.90, 1.95, 2.00, 2.05, 2.10, 2.15

7.5mm Diameter Dealer Shim Kit 2.20mm - 3.00mm (total 34 shims)
Order No. 035-002
Includes storage box and qt 2 each size of the following:
2.20, 2.25, 2.30, 2.35, 2.40, 2.45, 2.50, 2.55, 2.60, 2.65, 2.70
2.75, 2.80, 2.85, 2.90, 2.95 3.00

Shim Storage Box
Order No. 008-001

7.5mm Valve Adjustment Shims

Sizes available from 1.35 mm thickness - 3.00mm thickness. Sold each.

Size	Order No.	Size	Order No.
1.35mm	035-100	2.20mm	035-117
1.40mm	035-101	2.25mm	035-118
1.45mm	035-102	2.30mm	035-119
1.50mm	035-103	2.35mm	035-120
1.55mm	035-104	2.40mm	035-121
1.60mm	035-105	2.45mm	035-122
1.65mm	035-106	2.50mm	035-123
1.70mm	035-107	2.55mm	035-124
1.75mm	035-108	2.60mm	035-125
1.80mm	035-109	2.65mm	035-126
1.85mm	035-110	2.70mm	035-127
1.90mm	035-111	2.75mm	035-128
1.95mm	035-112	2.80mm	035-129
2.00mm	035-113	2.85mm	035-130
2.05mm	035-114	2.90mm	035-131
2.10mm	035-115	2.95mm	035-132
2.15mm	035-116	3.00mm	035-133

Honda

Model	Year
ARX1200N2 Aquatrax R-12	04-06
ARX1200N3 Aquatrax F-12	02-06
ARX1200T2 Aquatrax R-12X	03-06
ARX1200T3 Aquatrax F-12X	02-06
ARX1200T3D Aquatrax F-12XGP Scape	02-06

Yamaha

Model	Year
FX1000 Wave Runner	05-06
FX1000 Wave Runner Cruiser	05-06
FX1100 Wave Runner Cruiser H.O	04-06
FX1100 Wave Runner H.O.	04-06
VX1100 Wave Runner Deluxe	05-06
VX1100 Wave Runner Sport	05-06

Sudco 9.50mm Valve Adjustment Shim Kit

Sudco shims are OEM specific dimensions for proper fitments. Available in shop kit and individual sizes. Individual sizes sold each. ***Made in Japan.***

9.5mm Diameter Dealer Shim Kit 2.35mm - 3.30mm (total 34 shims)
Order No. 035-006
Includes storage box and qt 2 each size of the following:
2.35, 2.40, 2.45, 2.50, 2.55, 2.60, 2.65, 2.70, 2.75, 2.80, 2.85
2.90, 2.95, 3.00, 3.05, 3.10, 3.15, 3.20, 3.25, 3.30.

Shim Storage Box
Order No. 008-001

9.50mm Valve Adjustment Shims

Sizes available from 2.35 mm thickness - 3.30mm thickness. Sold each.

Size	Order No.	Size	Order No.
2.35 mm	035-220	2.85mm	035-230
2.40 mm	035-221	2.90mm	035-231
2.45mm	035-222	2.95mm	035-232
2.50mm	035-223	3.00mm	035-233
2.55mm	035-224	3.05mm	035-234
2.60mm	035-225	3.10mm	035-235
2.65mm	035-226	3.15mm	035-236
2.70mm	035-227	3.20mm	035-237
2.75mm	035-228	3.25mm	035-238
2.80mm	035-229	3.30mm	035-239

Kawasaki

Model	Year
JT1200B1/B2 Jet Ski STX12F	03-04
JT1200D1/D6F/D7F Jet Ski STX12F	05-07
JT1500A1/A2 Jet Ski STX15F	04-05
JT1500A6F/A7F/A8F Jet Ski STX15F	06-08

008-001

008-002

Sudco Plastic Jet Boxes (Storage Boxes)

Two boxes available, 36 compartment and 18 compartment. Use for valve shim storage, small parts, electrical connectors and carburetor jets. Sold each.

Description	Order No.
Jet Box with 36 Compartments 7-1/2" L x 10-1/2" L x 1-1/4" H	008-001
Jet Box with 18 Compartments 3-1/4" L x 6-3/4" L x 1-1/2" H	008-002

Gaskets & Piston Kits

Vesrah Gasket Sets for Kawasaki JS440

Sold in sets. ***Made in Japan.***

Kawasaki

Model	Year	Complete	Top End
JS440A1/A2/A3/A4	77-81	608-672	609-672
JS440A5-A16	82-92	———	609-673

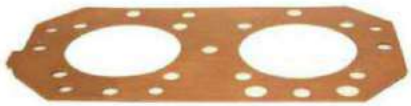

Copper Cylinder Head Gaskets

Quality high compression head gaskets are 40% thinner than stock replacement. Sold each. ***Made in Japan.***

Kawasaki

Model	Year	Order No.
JS440A1/A2/A3/A4	77-81	609-801

ART Personal Watercraft Piston Kits

All **ART** Piston Kits come with piston, ring set, wrist pin, and clips. Order one per cylinder, some models listed require 2 kits. ***Made in Japan.***

Kawasaki

Model	Year	Size	Piston Kit	Piston Ring
JS300A1/A2/A3 300 SX	87-89	STD	———	———
JS300B1/B2/B3	86-88	0.50mm	———	———
		1.00mm	———	624-642R
		1.50mm	———	624-643R
JS440A1-A16	77-92	STD	———	———
		0.50mm	———	624-621R
		1.00mm	———	624-622R
		1.50mm	624-623	624-623R
JS550A1-A8	82-89	STD	———	———
JS550B1 SX	1990	0.50mm	———	———
(single ring piston)		1.00mm	———	———
		1.50mm	———	624-633R
JB650A1/A2/A3/A4	89-92	STD	———	———
JF650A1-A9 X-2	86-94	0.50mm	———	———
JF650B1-B8 Tandem Sport	89-96	1.00mm	———	624-642R
JL650A1/A2/A3 Sport Cruiser	91-93	1.50mm	———	624-643R
JS650A1/A2/A3/A 650SX	87-90			
JS650B1/B2/B3 650SX	91-93			
JH750		STD	———	———
		0.50mm	———	624-681R
		1.00mm	———	624-682R
		1.50mm	———	624-683R

Yamaha

700/1100 Raider	STD	———	624-690R
	0.50mm	———	624-691R
	1.00mm	———	624-692R
	1.50mm	———	624-693R

Photo courtesy of Pro-Tec

Piston Pin Bearing

Sold each. ***Made in Japan.***

Kawasaki

Model	Year	OEM Reference	Order No.
JS300A1-A5 300 SX	87-91	13033-1010	623-930
JS300B1/B2/B3	86-88	13033-1010	623-930
JB650A1/A2/A3/A4 Jet Mate	89-92	13033-1010	623-930
JF650A1-A10 650 X2	86-95	13033-1010	623-930
JF650B1-B8 Tandem Sport	89-96	13033-1010	623-930
JL650A1/A2/A3/A4/A5 SC	91-95	13033-1010	623-930
JS650A1/A2/A3/A4 650 SX	87-90	13033-1010	623-930
JS650B1/B2/B3 650 SX	91-93	13033-1010	623-930

Connecting Rod Kits & Oil Filters

631-7204

631-7303

631-7303C

Vesrah Connecting Rod Kits

Vesrah connecting rod kits for watercraft models include connecting rod, crank pin bearing, crank pin, thrust washers and piston pin bearing. ***Made in Japan.*** ***Note: 623-650 is not Vesrah brand and does not include the crank pin.**

Kawasaki

Model	Year	Vesrah Ref.	Order No.
JS440A1-A16	77-92	VA-4902	*623-650
JS550A1-A8	82-89	VA-4902	*623-650
JS550B1 SX	1990	VA-4902	*623-650
JB650A1/A2/A3/A4	89-92	VA-4905	623-670
JF650A1-A9 X-2	86-94	VA-4905	623-670
JF650B1-B8 Tandem Sport	89-96	VA-4905	623-670
JL650A1/A2/A3 Sport Cruiser	91-93	VA-4905	623-670
JS650A1/A2/A3/A 650SX	87-90	VA-4905	623-670
JS650B1/B2/B3 650SX	91-93	VA-4905	623-670

Yamaha

SJ650D/P/Q/R Super Jet	90-93	VA-4952	623-660
VXR650P Wave Runner	1991	VA-4952	623-660
WR650D/P/Q/R Wave Runner LX	90-93	VA-4952	623-660
WRA650D/P/Q/R Wave Runner III	90-93	VA-4952	623-660
WRA650T/U Wave Runner III	95-96	VA-4952	623-660
WRA650AR Wave Runner Dix	1993	VA-4952	623-660
WRB650P-T Wave Runner VXR	91-95	VA-4952	623-660
WRB650AR Wave Runner VXR Dix	1993	VA-4952	623-660
FX700T/U FX-1	94-95	VA-4952	623-660
RA700S/T Wave Raider 80	94-95	VA-4952	623-660
RA700AT	1995	VA-4952	623-660
RA700BU/BV Wave Raider 80	96-97	VA-4952	623-660
SJ700S/T Super Jet	94-95	VA-4952	623-660
SJ700AU/AV/AW/AX Super Jet	96-99	VA-4952	623-660
WB700R/S/T Wave Blaster	93-95	VA-4952	623-660
WB700AU Wave Blaster	1996	VA-4952	623-660
WRA700S/T Wave Runner III GP	94-95	VA-4952	623-660
WRA700V Wave Runner III GP	1997	VA-4952	623-660
WRB700R/S Wave Runner Pro VXR	93-94	VA-4952	623-660
WVT700T/U/V/W Wave Venture	95-98	VA-4952	623-660
XL700X Wave Runner	1999	VA-4952	623-660
RA1100T/U Wave Raider	95-96	VA-4952	623-660
WVT1100U/V Wave Runner 3-P	96-97	VA-4952	623-660

K&N Oil Filters for Watercraft

Spin-on oil filters for personal watercraft applications. Sold each.

Honda

Model	Year	K&N No.	Order No.
ARX1200N2 Aquatrax R-12	04-06	KN-204	631-7204
ARX1200N3 Aquatrax F-12	02-06	KN-204	631-7204
ARX1200T2 Aquatrax R-12X	03-06	KN-204	631-7204
ARX1200T3 Aquatrax F-12X	02-06	KN-204	631-7204
ARX1200T3D Aquatrax F-12XGP Scape	02-06	KN-204	631-7204

Kawasaki

JT1200 STX-12F	03-07	KN-204	631-7204
JT1500 STX-15F	04-08	KN-204	631-7204

Yamaha

FX1000 Wave Runner	05-06	KN-303	631-7303
FX1000 Wave Runner Cruiser	05-06	KN-303	631-7303
FX1100 Wave Runner Cruiser H.O	04-06	KN-303	631-7303
FX1100 Wave Runner H.O.	04-06	KN-303	631-7303
VX1100 Wave Runner Deluxe	05-06	KN-303	631-7303
VX1100 Wave Runner Sport	05-06	KN-303	631-7303
Chrome Oil Filter		KN303C	631-7303C

Option for all the above models

Kawasaki Personal Watercraft Flywheel Puller M18mm x 1.5mm R.H.

Solid Puller Bolt. Allows you to pull flywheel without pulling motor from hull. Motion Pro Reference 08-0118. Sold each.

Order No. 950-470

Kawasaki

JH750A/E (92-96), JH750B/F (93-96), JH750C (95-96)
JS750A (92-95), JS750B (95-96), JT750A (94-95), JT750B (95-96)

Personal Watercraft Accessories

PC Racing Engine Hour Meter

Automatically records and displays your engines accumulated run time, so oil changes, piston, rings, valves, spark plugs, etc. can be serviced at the correct maintenance schedule. The correct schedule saves costly engine damage from service neglect, but Motominder can also save money from servicing too frequently. The smallest engine hour meter available (Approximately 1" x 1.5") it doesn't require additional mounting bracket and can be easily mounted by the peel and stick method to the frame or other convenient area. PC Racing is so confident that motominder is the most reliable engine hour meter available that it is backed by a 2-year manufacturer's replacement warranty. Works with all Gas Engines.

Description	Order No.
PCMM1	945-130

Two-Stroke Racing Oil

Red Line's popular two-stroke lubricants contain base oil which have the highest film strength and greatest affinity for hot metal. Because Red Line is a superior high temperature lubricant, it can be used at lower fuel to oil ratios, increasing power and providing excellent scuff protection and cleanliness. Where many two-stroke oils are recommended to run 32:1, many Red Line customers often mix at a leaner 40:1. Red Line provides the lubricating cleanliness, with low carbon residue that dramatically reduces plug fouling and smoke. Red Line provides special protection for formulated fuels. Dyno proven to make more power over longer periods of operating time.

Sold in 16 oz. and gallon bottles.

Description	Qt	Order No.
2-Stroke All Sport	16 oz	900-833
2-Stroke Alcohol	16 oz	900-848
2-Stroke Race	16 oz	900-830
2-Stroke Kart	16 oz	900-831
Watercraft & Injection	1 gallon	900-854
2-Stroke Race	1 gallon	900-829
2-Stroke Kart	1 gallon	900-832

Three Bond Griplock TB1501C

Keeps grips in place without damaging the rubber.
Sold in 1 oz. tube.

Order No. 800-155

When turning motorcycle carburetors, there are several procedures and preliminary checks that will make the tuning and troubleshooting process go smoothly and quickly.

1. In order for carburetors to work properly, the engine must be in good mechanical condition. All of the following parameters should be checked in order to proceed with the carburetor tuning.

A. Compression - all cylinders should be within 10% of each other according to cranking compression
B. Valve adjustment/Cam Timing - check valve clearance according to the factory service manual, consult a qualified technician if there is any question about the cam timing.
C. Ignition Quality - adjust point gap and ignition timing according to the factory service manual. Double check the gap and install new spark plug prior to any carburetor tuning.
D. Air Filter Quality - Check to see that the air filter is clean and that all baffles and snorkels are in place, or have been removed as necessary for increased airflow. In any case, the air box / air filter dimensions should be finalized.
E. Exhaust System - Install all mufflers and baffles. Double check all silencer packing and baffle installation. Finalize all exhaust system specifications before moving on to the carburetors. Jetting can vary dramatically according to muffler / baffle selection.

2. All fuel delivery circuits operate according to throttle position. In order to determine which there is a problem. Do not use R.P.M. to determine which circuit to tune. Sudco suggests the use of a throttle index on the twist grip to track the exact throttle opening of the carburetor.

Throttle Index

A. Place a piece of masking tape access the throttle housing adjacent to the twist grip so that it is visible from the riding position.
B. Install a colored push pin or sewing pin into the throttle grip flange adjacent to the masking tape. Adjust the throttle cable free play to near zero.
C. With the throttle closed, make a "0" mark on the masking tape adjacent
to the pin head on the throttle flange.
D. Open the throttle all the way and make a "W.O.T" mark on the masking tape adjacent to the pin head.
E. Using a tape measure, divide the distance between the two marks on the tape into quarters and make marks for each throttle opening on the tape. (0, 1/4, 1/2, 3/4, W.O.T.)
F. Ride the motorcycle and make mental notes regarding the carburetion according to the throttle index. If a problem is truly carburetor related, the symptoms will come and go according to the throttle position.

3. Work in progression from 0 throttle through full throttle. Motorcycle carburetor fuel circuits are additive. This means the main circuit delivery is an addition to the pilot circuit delivery. The pilot system delivers fuel at all throttle settings, therefore, the timing of the pilot circuit will have some influence on the decision to be made regarding the main circuit. If there is any question about the jetting of the pilot circuit it should be addressed first. After the pilot circuit has been optimized it is then possible to accurately evaluate the main circuit and it's related components.

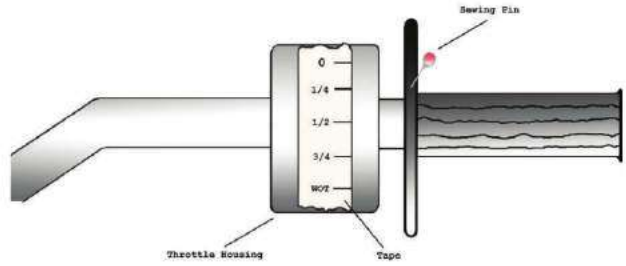

1.) Throttle Position
Component Functional Range - If re-jetting is required, first find the throttle position where there appears to be a problem. Then determine if the engine is running rich or lean by using the Symptoms Chart on the next page.

Throttle (Slide) Valve
The Carburetor's tuning components functional rate.

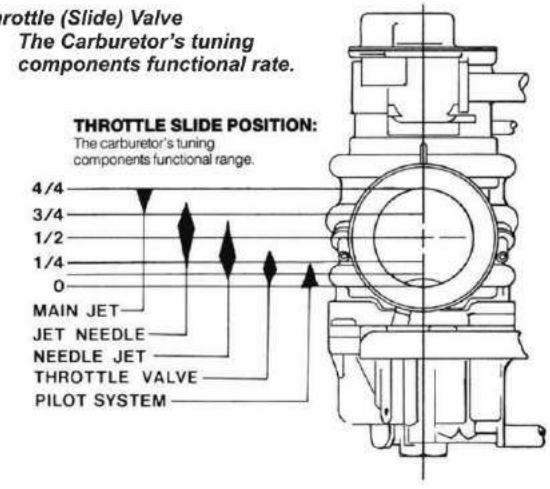

4. Altitude and Temperature

The purpose of the carburetor is to mix air and fuel in a specific ratio, by mass, in order to present a combustible mixture to the engine.
Carburetors are generally flexible instruments when used to mix air and fuel in the proper ratio and will compensate for small changes in air density. It is when the altitude or temperature becomes extreme that it will be necessary to re-jet according to atmospheric condition.

Altitude and temperature are important factors to consider when tuning carburetors for peak performance, as they directly affect air density. Notes should be taken regarding altitude and temperature changes as they occur in order to determine which way to go with carburetor adjustments.

Because air is a fas, its density is directly affected by altitude, barometric pressure, temperature and humidity. These factors will increase or decrease air density depending upon where you travel or how weather patterns develop in your riding area.

Gasoline is a liquid and cannot be compressed. therefore, its density is not affected by altitude, temperature, or humidity.

Because air density changes according to atmosphere conditions and fuel density does not, it becomes necessary to re-jet the carburetor according to changing altitude and weather conditions. As the density or mass of air changes, it becomes necessary to change the mass of fuel mixed with the air by changing the jets which meter the fuel.

Altitude affect air density the most. All other conditions being equal, as the elevation nears zero (sea-level), the air density will be greatest and the engine will require the richest carburetor settings that it will ever use. As elevation increases, the air density becomes less and the engine will require leaner carburetor settings in order to maintain peak performance. Generally, an engine which has been tuned correctly for sea-level will not require jetting changes until about 2500' elevation.

Temperature also has an effect on air density. As air temperature nears freezing (32 degrees F), the density of air will become greater. Conversely, as temperature rises toward 100 degrees F, air density becomes less. As air temperature decreases and air density becomes greater, the engine will require richer carburetor settings in order to maintain peak performance. Generally, an engine which has been tuned correctly fro room temperature change is about 20 degrees F.

How to Identify Rich or Lean Conditions

Lean Condition - A lean condition is an out of balance air/fuel mixture where there is not enough fuel in the mixture to deliver peak performance. The results of lean mixtures can vary from minor drive-ability problem to overheating and possible severe engine damage. Care should be taken to identify lean mixtures and correct them as soon as possible.

Typical Lean Mixture Symptoms:

1. **Engine acceleration is flat or slow to pick up.**
2 **It becomes difficult to apply the throttle quickly or the engine picks up speed when the throttle is rolled off.**
3. **The engine knocks, pings, or overheats.**
4. **The engine surges or hunts for a stable R.P.M. while cruising at part throttle.**
5. **When the pilot circuit is too lean there will be popping or spitting in the carburetors as the throttle is opened. Sometimes there will be popping or backfires in the exhaust system on engine deceleration after the throttle has been closed.**
6. **Engine performance improves in wanner weather conditions, or engine runs poorly in cold weather.**
7. **Engine performance worsen when the air filter is removed.**

Rich Condition - A rich condition is an out of balance air / fuel mixture where there is too much fuel in the mixture to deliver peak performance. A rich condition will result in excess carbon deposits within the combustion chamber and exhaust system, decreasing the life of the engine and related components. In addition to poor fuel economy, a rich running motorcycle will pollute excessively and contribute to environmental problems.

Typical Lean Mixture Symptoms:

1. **Engine acceleration is flat, uneven, not crisp.**
2 **Two stroke engines will sputter or "4 stroke" and skip combustion cycles.**
3. **The throttle needs to be opened continuously to maintain consistent acceleration.**
4. **The engine performs poorly when the weather conditions get warmer, or the engine works better in cold conditions.**
5. **Excessive smoke from the tail pipe, black smoke from the tail pipe of four stroke.**
6. **Poor fuel economy.**
7. **Engine performance improves when air cleaner is removed.**
7. **When the pilot circuit is rich, the engine will idle roughly or not return to idle without blipping the throttle. The exhaust will smell of excessive fuel and bum the eyes.**
9. **Black, sooty or fouled spark plugs. Black and sooty exhaust tail pipes on four - strokes. Greasy and drippy tail pipes on two-strokes.**

Carburetor Troubleshooting Guide

Problem	Possible Causes	Correction
Hard Starting	Incorrect use of choke	Correct use of choke
	Incorrect air mixture adjustment	Set mixture adjustment screw in accordance with owner's manual instructions
	Clogged fuel filter	Clean filter
	Clogged low speed fuel jets	Disassemble carburetor and chemically clean
	Clogged vent in fuel jets	Unclog vent or replace cap
	Clogged vent in fuel cap	Unclog vent or replace cap
	Float stuck	Remove float bowl, check float operation and correct or replace
	Float damaged or leaking	Replace float
	Incorrect float level	Set float height in accordance with shop manual specification
	Intake air leak	Check carburetor mounting flanges for air leaks
	Ignition problem	Repair, replace, or adjust as necessary
	Low cylinder compression	Repair, replace, or adjust as necessary
Poor Idle or Stalling	Idle adjustment(s)	Adjust idle RPM in accordance with specification in owner's manual or shop manual
	Idle speed adjustments are unequal (twin and multi-carburetor models using individual throttle stop adjustments)	Equalize throttle stop settings
	Clogged idle & low speed air bleed	Disassemble carburetor and chemically clean
	All causes listed under "Hard Starting"	
Idle mixture adjustment is effective. Carburetor does not respond to movement of the idle mixture screw.	Idle speed set too high	Adjust speed in accordance with specification in owner's manual or shop manual
	Clogged low speed air-bleeds	Disassemble carburetor and chemically clean
	Damaged mixture adjustment needle	Replace mixture adjustment needle
	Mixture adjustment needle "O" ring is not sealing (models using "O" ring)	Replace "O" ring
	Damaged mixture adjustment needle seat	Replace carburetor
Slow return to idle	Idle speed set too high	Adjust idle speed in accordance with specification in owner's manual or shop manual
	Idle speed adjustment are unequal (twin and multi-carburetor models using individual throttle stop adjustments)	Equalize throttle stop setting
	Throttle valve sticking	Clean and inspect throttle valve and return spring. Replace as necessary
	Throttle linkage sticking	Clean and inspect throttle linkage and return spring. Lubricate, repair, or replace as necessary.
	Throttle cable blinding	Correct routing or replace cable as necessary
Engine surges when at a constant speed	Incorrect air-fuel mixture adjustment	Low speed - Low speed jet size change. Intermediate - Jet needle height adjustment
	Vacuum piston sticking	Clean and inspect vacuum piston and return spring. Replace if necessary.
Engine does not develop full power, or misses on acceleration	Incorrect choke	Correct use of choke
	Clogged air cleaner	Clean or replace
	Incorrect air-fuel mixture adjustment	Low speed - Low speed jet size change Intermediate - Jet needle height adjustment High speed - Main jet size change
	Throttle valve not synchronized (models with two or more carburetors)	Adjust throttle valve synchronization
	Clogged fuel filter	Clean filter
	Clogged fuel jets	Disassemble carburetor and chemically clean
	Clogged air bleeds	Disassemble carburetor and chemically clean
	Fuel jet loose	Tighten fuel jets
	Fuel jet "O" rings leaking (models using "O" rings)	Replace "O" rings
	Float stuck	Remove float bowl, check float operation, and correct or replace
	Float damaged or leaking	Replace float
	Incorrect float level	Set float height in accordance with shop manual specification
	Vacuum piston diaphragm raptured	Replace vacuum piston assembly
	Ignition problem	Repair, replace, or adjust as necessary
	Low cylinder compression	Repair, replace, or adjust as necessary

Carburetor Tuning

Calibration Chart (for FCR, CRS, PWK, PJ, PE)

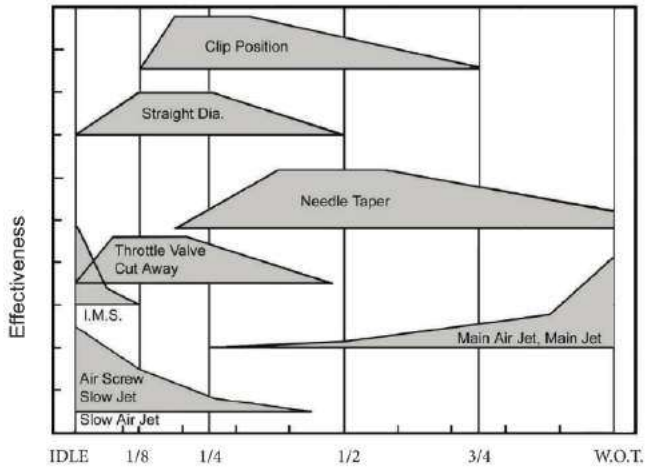

Float Height

FCR	CR	PWK		PD	PD
ALL	ALL	28	35-39	26-30	36-39
9mm	14mm	19mm	16mm	12.5mm	22.5mm

PJ	PWM	PE		
ALL	38	24-38	30-34	36-39
16mm	6.5mm	14.mm	20mm	22.25mm

NOTE: (See Jetting instruction #1) for correct procedure.

Example #1

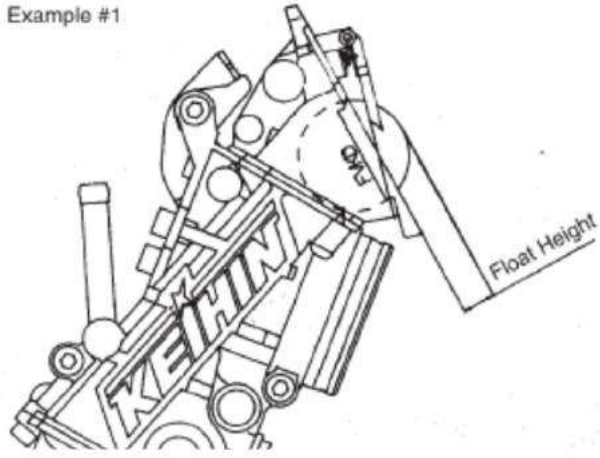

Jetting Your Slide Valve Carburetors

All Keihin carburetors are pre-jetted for bolt-on operation. Carburetors are jetted using stock motorcycles and watercrafts. Any major engine modifications like higher compression pistons and racing exhaust systems may require minor jetting adjustments. The followong is a guideline jetting in the order given below.

1) CORRECT FLOAT HEIGHT

Before changing any jetting parts, check the carburetor floats for correct height. Measure the height from the bottom of the float to the carburetor-body gasket surface. Correct height can be found on the chart. When checking the float height, the float should be resting, but not depressing, the spring loaded float valve pin. This can be done by tilting the carburetor until the float tab just makes contact with the valve pin. If adjustment is needed, bend the metal tab on the float arm until correct height is obtained. ----- see example #1.

2) IDLE

Set idle speed to proper r.p.m. by adjusting the IDLE SPEED SCREW. Turn the IDLE MIXTURE SCREW or the AIR SCREW to achieve highest speed and best response. The IDLE MIXTURE SCREW (FCR) controls fuel delivery to the idle port and the SCREW is located on the engine side of the carburetor slide. Turning the IDLE MIXTURE SCREW out will male idle and off-idle richer. Turning IDLE MIXTURE SCREW (CR, PWK, PJ, PE) controls the amount of air to the IDLE and SLOW CIRCUIT. The SCREW is located on the air cleaner side of the throttle slide and turning the SCREW out will lean the mixture and turning the SCREW in (clockwise) will richen mixture.

3) OFF IDLE TO 1/4 THROTTLE

The SLOW JET and SLOW AIR JET are most effective in this range, use a larger SLOW JET or a smaller SLOW AIR JET. The opposite holds true for a leaner mixture.

Jet Needle Changes

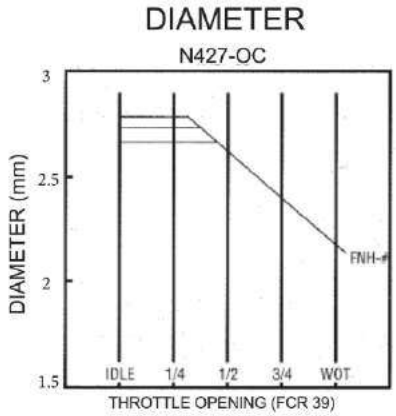

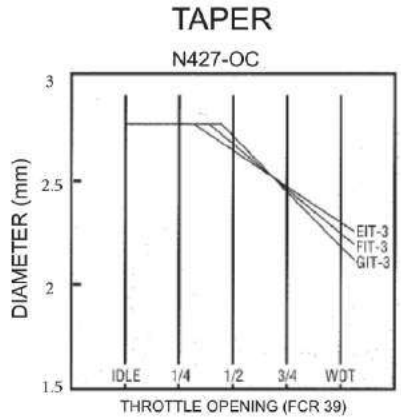

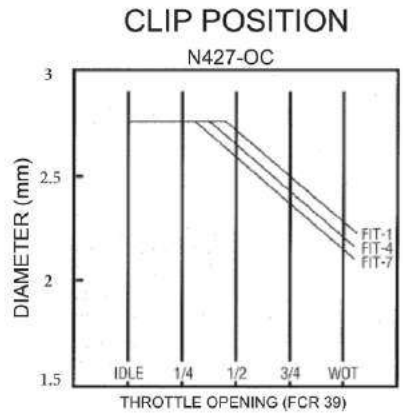

4) 1/4 TO 3/4 THROTTLE
The JET NEEDLE is the most effective component in the range. Changing the STRAIGHT DIAMETER (D) will change the calibration in the transition range from the SLOW circuit to the MAIN circuit (1/8 to 1/4) throttle. A smaller diameter will make this range. TAPER (A) changes are only made if there is a problem balancing the calibration between 1/4 and 3/4 throttle. If the mixture is rich at 1/4 throttle and lean at 3/4 throttle , a JET NEEDLE with a larger taper is needed. If mixture is lean at 1/4 throttle and rich at 3/4 throttle change to smaller taper. If the calibration is lean from 1/4 to 3/4 throttle, raise the JET NEEDLE by lowering clip position, or use JET NEEDLE with shorter length (L1). If the calibration is rich, lower the JET NEEDLE with a longer (L1).

5) WIDE OPEN THROTTLE
Changiing the MAIN JET affects this range. SELECT the size of MAIN JET which offers the best W.O.T. performance, then install one, size larger MAIN JET for ideal engine durability.

6) ACCELERATOR PUMP (FOR FCR)
In normal applications, the ACCELERATOR PUMP should not require any adjustment. If a rich stumble occurs as the throttles are opened, the ACCELERATOR PUMP timing can be delayed by widening the gap on the ACCELERATOR PUMP linkage where it makes contact with the plastic lever. Reducing the gap will cause the ACCELERATOR PUMP to deliver fuel earlier.

7) THROTTLE VALVE CUT-AWAY (FOR CR, PWK, PJ, & PE)
THROTTLE VALVE CUT-AWAY will influence the calibration in the are of 1/8 to 1/4 throttle. What the CUT-AWAY does is change the air velocity over the MAIN NEEDLE JET which changes when the MAIN SYSTEM begins delivering fuel. If the transition us lean change the throttle valve to a valve which has less CUT-AWAY (lower number) if this range use a throttle cvalve with more valve CUT-AWAY (higher number).

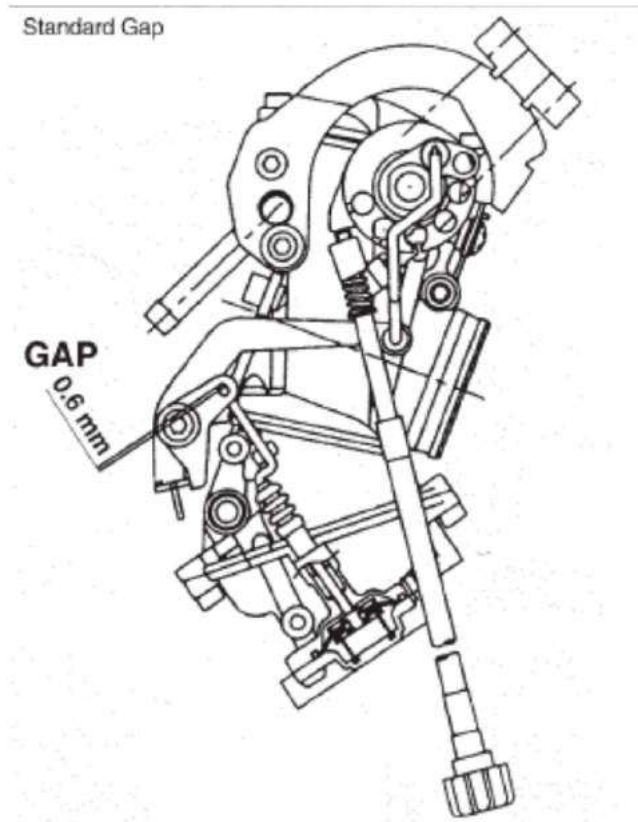

Jetting Your CDK II Diaphragm Carburetors

1) IDLE

Set the idle speed to proper r.p.m. by adjusting the IDLE SPEED SCREW. Next, turn the IDLE MIXTURE SCREW to get the highest speed, then turn out the IDLE MIXTURE SCREW approximately 1/4 to achieve best response. The IDLE MIXTURE SCREW controls fuel delivery to the idle port and also contributes fuel to the SLOW CIRCUIT.

2) OFF IDLE TO 1/4 THROTTLE

The SLOW JET is the most effective in this range. WHen you want a richer mixture in the range, use a larger SLOW JET. The opposite holds true for achieving a leaner mixture.

3) POP-OFF PRESSURE

In most applications it will not be necessary to change the POP-OFF PRESSURE. If the engine is modified or a larger carburetor is used, changing POP-OFF to a lower pressure may benefit the calibration. If engine exhibits poor acceleration or is lean at W.O.T., try lowering the POP-OFF pressure by using a lighter spring or a larger valve.

4) WIDE OPEN THROTTLE

Changing the MAIN JET or HIGH SPEED SCREW adjustment affects this range. Start adjusting by turning the HIGH SPEED SCREW until the best performance is achieved. Then, check number of turns on the screw. If the screw is adjusted all the way in, install a smaller MAIN JET. If the screw is out more than three turns, install a larger MAIN JET. Continue until optimum performance is achieved and the HIGH SPEED SCREW is at approximately 1 to 1 1/2 turns. This will allow some adjustment range on the HIGH SPEED SCREW to perform minor adjustments or to compensate for temperature changes.

Calibration Chart (for CDK II)

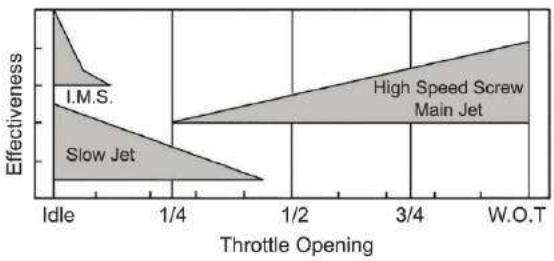

POP OFF PRESSURE						
MODEL CDK II	SPRING FORCE	SPRING LENGTH	PART NO.	NEEDLE VALVE SIZE		
				1.6 (std)	1.8	2.0
42mm	70gr.(std)	11mm	1290-947-2000	24psi	21psi	18psi
	40gr.	9.17mm	1290-966-2000	15psi	13psi	11psi
40mm Mid Range & 42mm Accp.	70gr.(std)	8.7mm	1290-961-2000	N/A	N/A	N/A
	40gr.	7.4mm	1290-992-2000	N/A	N/A	N/A

Internal View

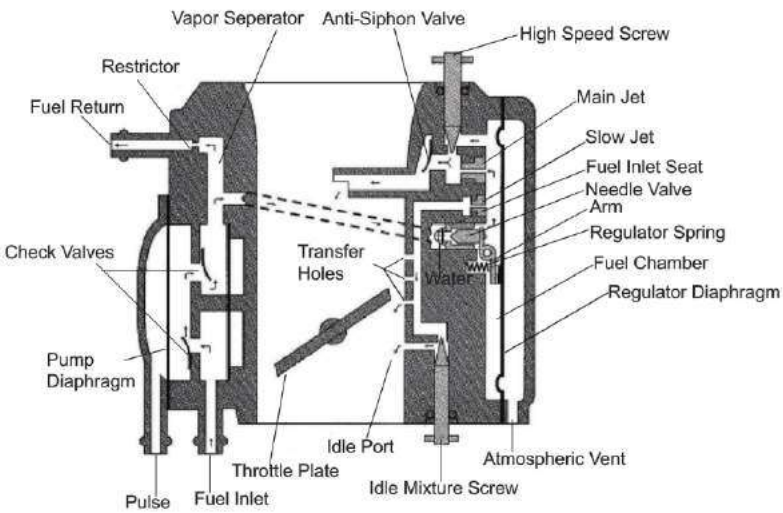

NOTE: Make only one change at a time.

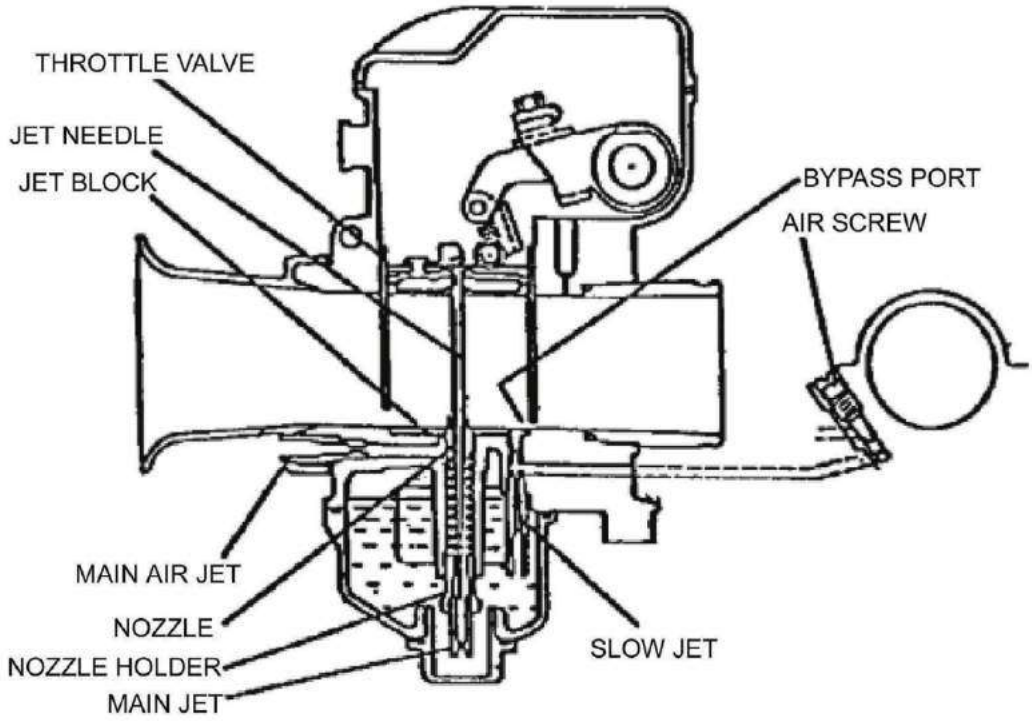

BORE SIZE SELECTION

The chart below shows the general recommended venturi size for four cylinder engines by engine displacement. Depending upon make and model, stock engines may use a smaller bore size than shown and a fully tuned race engine may use one size larger.

ENGINE DISP. (cc)	550	650	750	1000cc - up
VENTURI SIE (mm)	26mm	29mm	31mm	33, 35, 37, 39

THROTTLE CABLE

CR-SPECIAL Carburetor Set is designed for use with dual throttle cables. It is highly recommended that bikes with single cable throttle be modified to a push-pull type dual cable system. There is a potential danger in using a single cable in that the strong vacuum suction may not allow the throttle valve to close to its closed position.

NEEDLE JET

On the primary Choke type as in the CR-SPECIALS offered by SUDCO the Needle Jet is part of the Nozzle Holder. KEIHIN offers a Screen Type and Flat Tyoe of Needle Jets. However, the Flat Type comes standard in all CR-S from SUDCO. We have found both street and racing applications that the Flat Type is more efficient in the CR-S carburetors. In any case, the Needle Jet is not a calibration parts and jetting should be done by changing the Needle (Jet Needle).

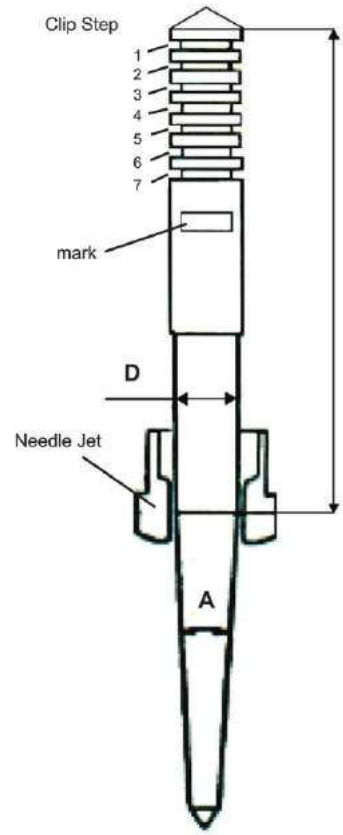

NEEDLE

The Needle has four factors:

1. Straight portion diameter (D)
2. Clip step
3. Straight portion length (L1)
4. Taper (A)

The final flow is metered at the opening between the Needle and the Needle Jet.

MULTI-TAPER NEEDLE

Richer	Mark	D	A&L
	Y5	2.755	
	Y6	2.765	
	Y7	2.775	A1 = 0°50'
	Y8	2.785	A2=3°30'
	Y9	2.795	A3=1°30'
	Y0	2.805	L1=50.3
	Y1	2.815	L2=60.3
	Y2	2.825	L3=65.3
Leaner	Y3	2.835	L4=83.3

Richer			
	YY5	2.755	
	YY6	2.765	
	YY7	2.775	A1= 0°50'
	YY8	2.785	A2=3°30'
	YY9	2.795	A3=1°30'
	YY0	2.805	L1=50.3
	YY1	2.815	L2=60.3
	YY2	2.825	L3=65.3
Leaner	YY3	2.835	L4=83.3

Y and YY Needles are available in .01mm diameter increments. YY is 2.7mm longer than Y.

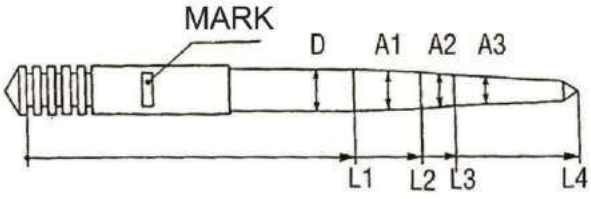

Starter Valve
(Enricher Valve)

Richness at Starter Valve "ON" is adjusted by the Starter Jet.

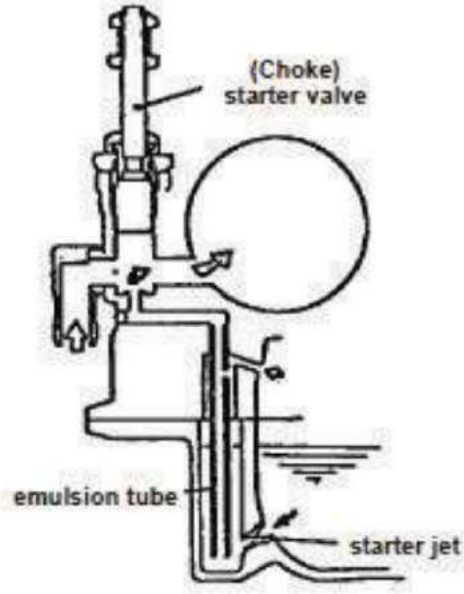

FUNCTION OF JETTING COMPONENTS

Setting Part	To Make Richer	Recommended Increment ForChange
Main Jet	use larger number	2 or 3 numbers
Main Air Jet	use smaller number	10 numbers on Primary
Slow Jet	Use larger number	2 or 3 numbers
Air Screw	turn clockwise	1/4 turn
Throttle Valve Cutaway	use smaller number	.5mm
Jet Needle	use skinner one	see Jet Needle section

CONTRIBUTION OF JETTING COMPONENTS

Each calibration part controls fuel flow at a different throttle opening. The diagram below will give you an idea which calibration part is the key at various throttle openings.

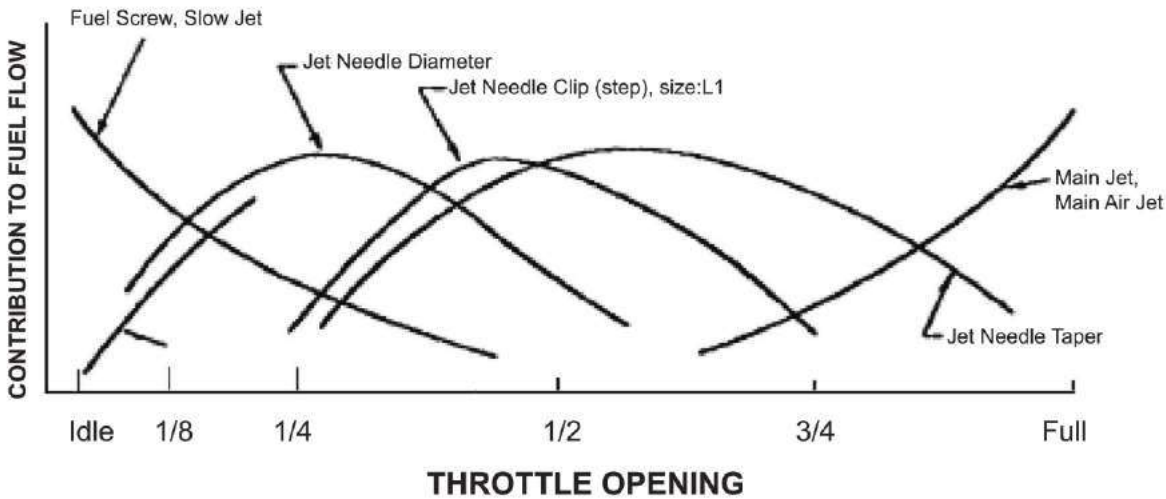

NOTE: Some gas tanks have one fuel line and another for vacuum. Eliminate the vacuum line (usually thinner), connect the fuel line to the carb and find a position on the petcock (usually PRIME) where fuel flows at all times.

MIKUNI Venturi Operation

Operation of a simple Venturi

The Mikuni slide type carburetors described in this manual are also known as "variable venturi" type carburetors. A venturi is a restriction within the carburetor designed to speed up the air flowing through the carb. It is at the point of the smallest cross section that the incoming air flow will have the greatest velocity. As air flow speeds up to pass through the venturi, it loses pressure. It is at the point that the pressure within the carb throat will be at its lowest; this is called "depression."

At this point of maximum depression, the fuel will be introduced to the air stream. In order to transfer fuel from the fuel chamber into the carburetor venturi, a small tube is placed into the venturi which connects to the fuel load in the chamber to the venturi. The fuel chamber is open to the atmospheric pressure (15psi approx.) and the pick-up tube is exposed to the depression within the venturi. The difference in pressure will attempt to equalize through the pick up tube, pushing fuel from the fuel chamber into the venturi. The fuel is mixed with the incoming air and delivered to the engine down stream. This is the basic principle by which all carburetors operate.

It is important to remember that is the pressure difference between the fuel chamber and the venturi which pushes the fuel into the intake stream. The presence of engine vacuum alone is not enough to draw fuel into the intake port. Without the atmospheric pressure in the fuel chamber, the fuel could not be delivered into the intake port.

The above model will serve a single speed engine very well with the venturi becoming the throttle. The engine will run at one speed only, depending upon the size of the venturi. because motorcycles are operated at various engine speeds, there needs to be a way to control the speed of the engine.

In order to throttle down this wide open carburetor design, Mikuni has inserted a slide which crosses the carburetor throat to control air flow to the engine, limiting engine speed according to the slide lift. This slide lift varies the cross section of the carburetor bore at the venturi point. This is how slide carburetors become known as "variable venturi."

Variable Venturi Design

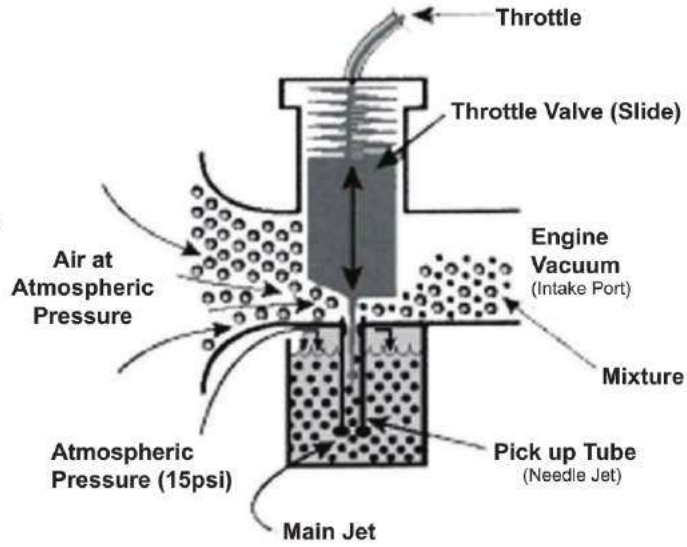

These variable venturi type carburetors are very good at maintaining high air speeds with in the carburetor throat and generally offer better overall performance other carburetor designs.

From this simple fuel delivery circuit, carburetor designers will add and divide this circuitry in order to tailor the mixture available to the engine, enabling it to run accurately at a wide variety of speeds and loads.

Simple Venturi Design

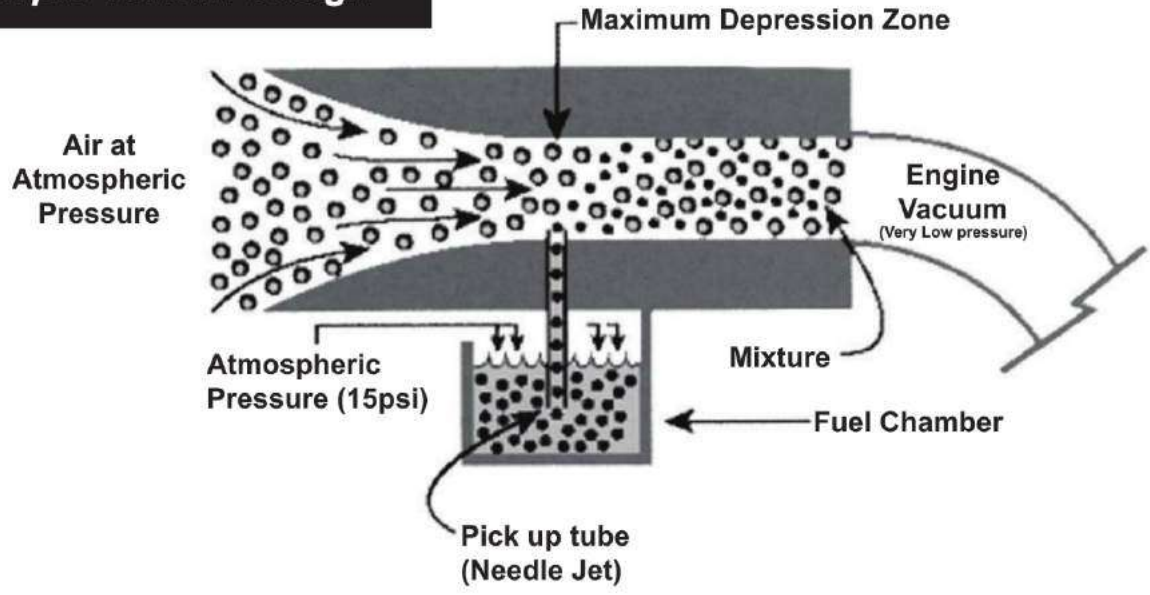

General Mikuni Slide Carb Circuitry

This manual us untended as a guide for users of Mikuni carburetors who want to learn the basic methods of tuning and adjusting to obtain top performance and fuel economy. The arrows that appear in the drawings in this text show direction in which air, fuel, and air-fuel mixture flows.

Information here with in obtained from Mikuni engineering data and manuals.

1. CARBURETOR FUNCTION

The function of a carburetor is to deliver a combustible air-fuel mixture to the engine. However, in order to be effective, it must first break the fuel unto tiny particles (in the form of vapor) and then mix the fuel with air in a proper ratio so it can burn without leaving excess fuel or air.

2. AIR-FUEL MIXTURE (Fig. 1)

The mixture of the air-fuel ratio is generally expressed by its relative weight proportion. For example, the amount of air required for complete combustion of 1 gram of fuel under normal condition is:

Figure 1

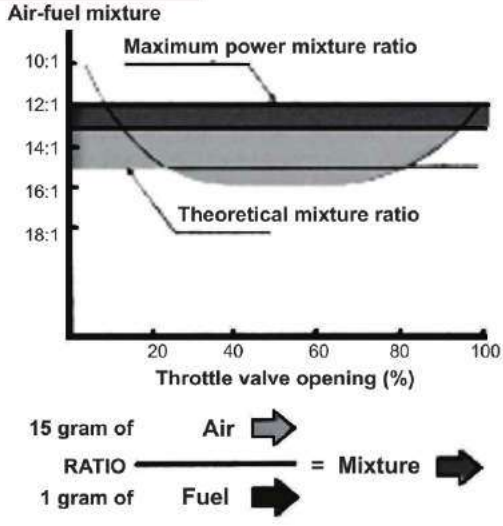

Varying mixture ratios are required for the engine depending on operating conditions. Although the required mixture ratio varies more or less with the engine, its colling efficiency, etc., the mixture ratio shown in fig. 1 is required for ordinary engines. In the high speed range the ratio of about 12 to 13 grams of air for 1 gram of fuel produces the maximum output. However, in the case of an engine with low cooling efficiency, somewhat richer mixture (10 to 12 grams of air against 1 gram of fuel) may be required to prevent seizure of the engine.

3. FUNCTIONS AND CONSTRUCTION MIKUNI SLIDE TYPE CARBURETORS

Motorcycle engines are operated under a wide range of conditions, from idling with the throttle valve (Fig.2(1)) remaining almost closed, to the fill load (the maximum output) with the throttle valve fully opened. In order to meet the requirements for the proper mixture ratio under these varying conditions, a low-speed fuel system (the pilot system) and a main fuel system (the main system) are provided in Mikuni Slide -type carburetors, except Mikuni TMS.

A. - The Pilot System

Low -speed fuel system (Fig. 2 and Fig.3)

Since the engine is operated with the throttle valve almost closed at idling or in the low speed range, the velocity of air flowing through the needle jet (2) is sloe. Consequently, a vacuum strong enough to draw fuel from the needle jet in the main fuel system is not created. The fuel supply during the slow speed operation is controlled by means of the pilot outlet (3) and the bypass (4) that are situated nearest to the engine. At idle, when the throttle valve is slightly opened, fuel metered by the pilot jet (5) is mixed with air adjusted in a proper amount by the air screw (6) and is broken into fine vapor particles.

Figure 2

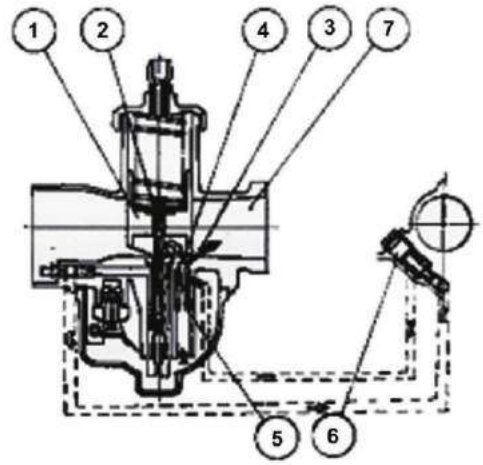

The mixture is again mixed with air coming from the bypass and is drawn into the pilot outlet to mix air flowing through the main bore (7). The fuel mixed with air at this stage then goes to into the engine. When the throttle valve is opened slightly during low speed operation, the pilot outlet alone cannot supply the required fuel and the shortage has to be made up with fuel injected from the bypass. The adjustment of the mixture ratio during this stage is made by the pilot jet and the air screw, as in the case of a two-hole type fuel system (Fig. 3). While at low speed operation, if full throttle is initiated a similar shortage of fuel again has to be injected from the bypass until enough (vacuum) can be created to draw fuel from the main fuel system. There is also a one-hole type low speed fuel system mainly used for carburetors having a small main bore. The process of producing the air fuel mixture ratio are the same as in a two-hole type low speed system.

Figure 3

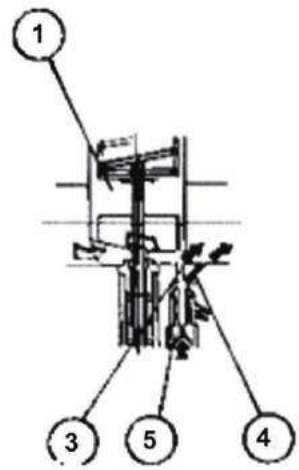

B. - Main Fuel System

On Mikuni VM - type carburetors, the pilot system and the main system are of the independent commotion. The fuel flow in these two systems is shown in Fig.5 Bleed and primary needle jets can be used on 2 or 4 stroke, use what style achieves proper fueling for your application. It is important to note (Fig. 5) that the main system mixture delivery is in addition to the mixture delivered by the pilot system. Therefore, adjustments to the pilot system should be made first, as they will affect the adjustments to the pilot system should be made first, as they will affect the adjustment of the main system to a diminishing extent as the throttle is opened from 1/4 to full throttle.

Figure 5

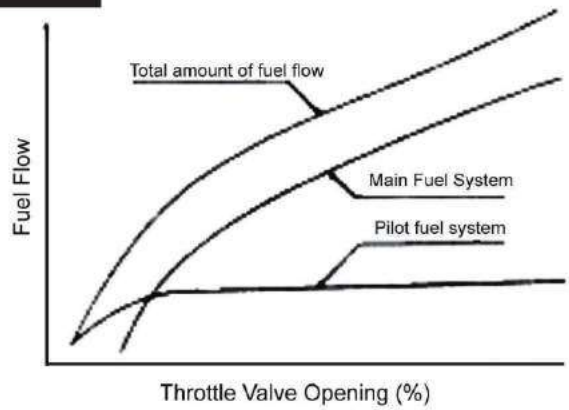

Primary Type (Fig.6)

When the throttle valve is opened about 1/4 or more, the velocity of air flowing through the needle jet (10) increases and also the vacuum increases to the point where fuel can be sucked in. When the opening of throttle valve (1) is between a quarter and three quarters, fuel passes through the main jet (9) and, after being metered in the clearance between the needle jet (10) and the needle (11), it is mixed with air that is metered by the air jet (12) and atomization of the fuel is accelerated.

Figure 6

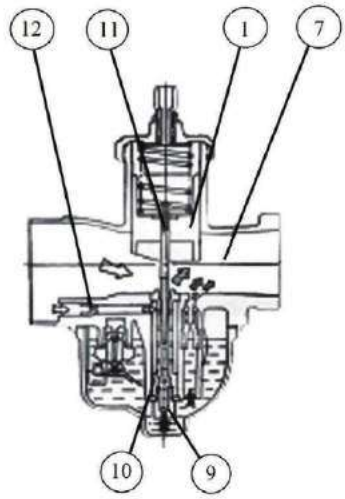

The mixture is then injected, after mixing with air flowing through the main bore (7), to the engine in the optimum air-fuel ratio. During this process of operation, the cutaway of the throttle valve serves to control the vacuum on the needle et, thereby regulating the amount of fuel that is injected to the engine. When the throttle valve is opened more than three quarters high speed operation, fuel is metered chiefly by the main jet (9).

Bleed Type (Fig. 7)

The construction of the bleed - type (10) main fuel system is the same as that of the primary type, except for the bleed holes that are provided in the needle jets.

In the case of the primary type, air which comes from the main air jet is mixed with the raw fuel after it has been metered by needle jet and needle. This atomization take place behind the nozzle screen or shroud above the needle jet outlet. The bleed type on the other hand is designed to bleed the air coming from the main air jet into the body section of the needle jet where it is emulsified with the fuel coming up from the bottom. The needle jet and needle then meter a blend of air/fuel, resulting in a finer atomization and generally leaner mixture than the same size primary type needle jet.

Figure 7

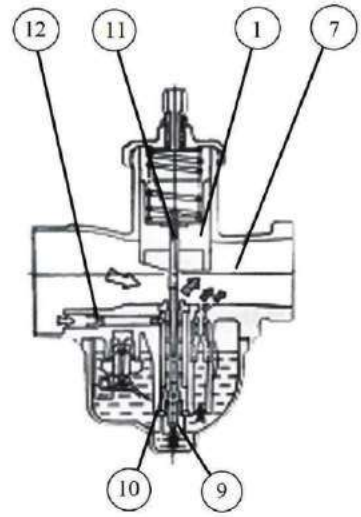

C. Float System (Fig.8)

The float system serves to maintain a constant level of fuel in the bowl. Fuel flows through the needle valve (14) and enters the float chamber (15). As the fuel enters the float chamber, the float (16) moves upward to its per-determined level because of buoyancy. When the fuel reaches the per-determined level, the needle valve begins to close due to the lever action of the float arm rising as the float attains buoyancy, thus shutting off supply of fuel.

The fuel level in the bowl controls the amount of fuel which is metered to make the optimum fuel mixture. For example, too high a level allows more fuel than necessary to leave the needle jet, enriching the mixture. Too low a level results in a leaner mixture, as not enough fuel leaves the needle jet. Therefore, the predetermined fuel level should not be changed arbitrarily.

Figure 8

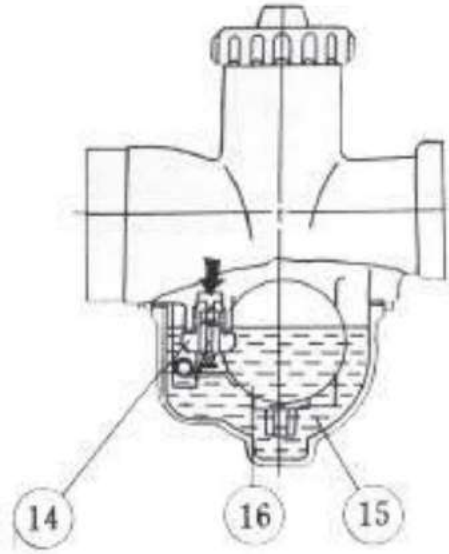

D. - Starter System (Fig.9)

Figure 9

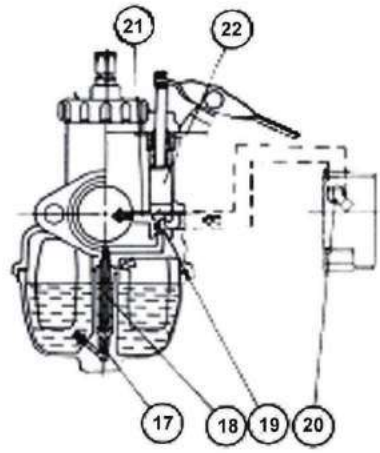

Rather than a choke, an enrichener type starter system is employed for Mikuni carburetors. The enrichener starter type, fuel and air, for starting the engine are metered by entirely independent jets. The fuel metered by the starter jet (17) is mixed with air and is broken into tiny particles in the emulsion tube (18). The mixture then flows into the plunger area (19), mixes again with air coming from the air intake port for starting and is delivered to the ngine in the optimum air-fuel ratio through the fuel discharge passage (21). The enrichener is opened and closed by means of the starter plunger (22). Since the enrichener is constructed so as to utilize the vacuum of the inlet passage (20), it is important that the throttle valve is closed when starting the engine.

Figure 10

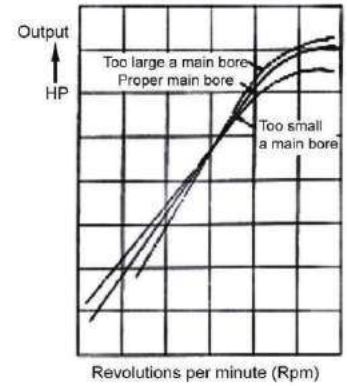

A. - Carburetor Main Bore Size Selection

One of the main prerequisites for improving the output is to use a carburetor with a large a main bore as possible. However, a large main bore alone does not necessary improve the output. As shown in Fig. 10, it is true that a large main bore improves the power output in high speed range. However, in slow speed range, the output may drop. The main bore size selection should be determined by various factors such as: (1) whether the vehicle is intended for racing, (2) the design of the engine, (3) rising technique of the rider, (4) the rider's preference, etc. In addition, the maximum output, the maximum torque, and the maximum number of revolutions for stable engine operation must also be taken into account Fig. 10 shows the values which we have obtained throughout experience over the years.
Since the engine comes in a wide variety of types, the values given in Fig 10 should be taken only as reference values.

4. TUNE UP & CARBURETOR SELECTION

Turning up normally means a process of accurate and careful adjustments to obtain maximum engine performance. Although, it means is a broad sense, an economical improvement fuel consumption. Improvement of power output of the engine depends on the amount of air drawn into the cylinder per unit time. A practice generally followed for engine tune-up includes:

1.) To improve suction efficiency and exhaust efficiency by remodeling the intake and exhaust system.
2) To improve combustion efficiency by raising the compression ratio
3) To increase the number of revolutions by adjusting the ignition timing

Air/Fuel Mixture

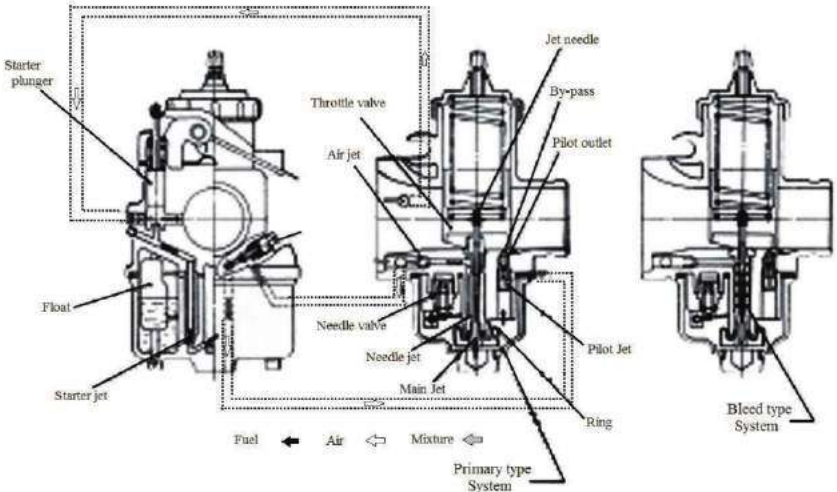

5. Carburetor Setting

Once the main bore size of the carburetor is determined. a test (normally referred to as setting or matching) to select the proper jet or setting part should be made. The size of the jet is determined be measuring the output in a bench or in a chassis dyno test. For racing it is best to determined the proper size of the jet on the racing course.

The following points must be taken into account:

1) the altitude (atmospheric pressure), temperature and humidity of the racing course.

2) The operation of the engine based on the topography of the racing course.

3) Generally, carburetor tuning is done in four stages: idle, low speed, mid-range, and high speed in that order. With the Mikuni, each stage is controlled by a separated component simplifying the tuning process.

The engine cylinders need to take sufficient air and fuel mixed in proper amounts. The function of a carburetor is to prepare and supply a mixture of fuel vapor and air to the engine cylinders in the proper ratio for efficient combustion.

General Mikuni Slide Carb Circuitry

A. - Pilot Jet and Low Speed Fuel System (Fig.15 & 16) (Air Screw type carburetors only)

In the low speed fuel system of the carburetor, the pilot outlet and the bypass have holes whose size is in relation to the main bore of the carburetor. Hence, the adjustment and selection of the pilot jet and the air screw is important. Turn the throttle a little at no-load operation and see if the engine revolution increases smoothly. If the pilot is too small, increases in the engine speed will be slow and irregular. Too big a pilot jet, on the other hand, would give rise to heavy exhaust smoke as well as a dull exhaust noise. If you cannot maintain the speed in the range of 12-25 mph with the throttle held, the pilot is too small.

Selection and setting of the air screw should be made in the following manner. First, warm up the engine adequately and set the idle screw so that the engine revolution at idling will be about 10-20% higher than the number of revolution you are aiming at. Then, tune the air screw left and right (between 1/4 and 1/2 turn) and select the position where the engine revolution reaches the maximum. Adjust the idle screw to bring down the engine revolution to your target speed for idling. After this adjustment of the idle screw is made, select once more the position where the engine revolution reaches the maximum, by turning the air screw left and right (between 1/4 and 1/2 alternately). At this point, attention should be paid to the following points.

1) If there is a certain range in the opening of the air screw where fast engine revolution can be obtained, (for instance, the number of revolutions does not change in the range of 1-1/2 to 2.0 turn), for better performance you should select approximately 1-1/2 turn.

2) To determine the "fully closed" position of the air screw, turn the air screw slightly. Excessive tightening of the air screw would damage the seat. The position where the air screw comes to a stop should be considered the "fully closed" position. The maximum number of turns in the opening of the air screw must be limited to 3.0. If the air screw is opened over 3.0 turns, the spring will not work and the air screw can come off during operation of the vehicle. Fig. 16 shows the fuel flow curve in relation to the opening of the air screw.

Figure 15

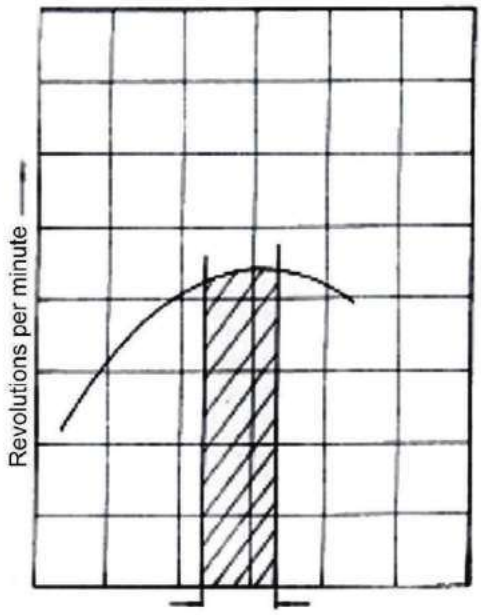

Best operating range

Figure 16

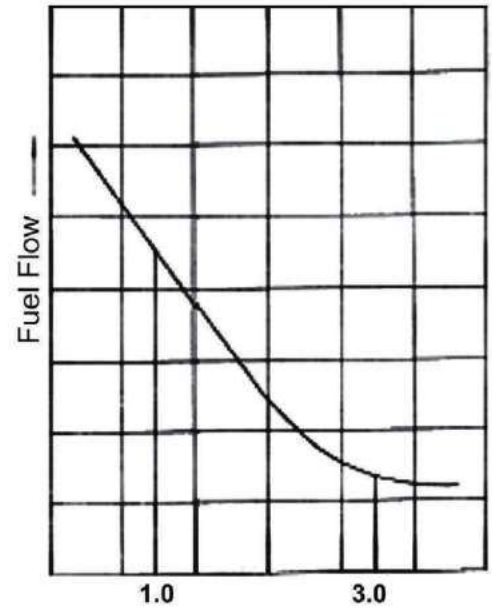

Air Screw Opening

B - The Cutaway Size of the Throttle Valve (Fig.17)

The size of the cutaway of the throttle valve affect the air-fuel mixture ratio when the degree of the throttle valve opening is between 1/8 and 1/2, especially in the range of the 1/8 and 1/4 opening. As the cutaway gets larger in size, with the throttle valve opening kept unchanged, air inflow resistance is reduced and causes the amount of air intake to increases, resulting in a lean mixture. On the other hand, the smaller the size of the cutaway, the richer the air-fuel mixture will become. Interchange of the cutaway is made, when the low speed fuel system is out of balance with the main fuel system.

Figure 17

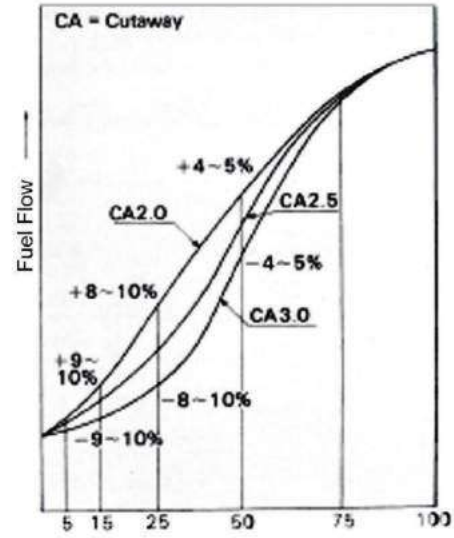

C- Selection of NEEDLE (Fig. 13 & 14)

Figure 17

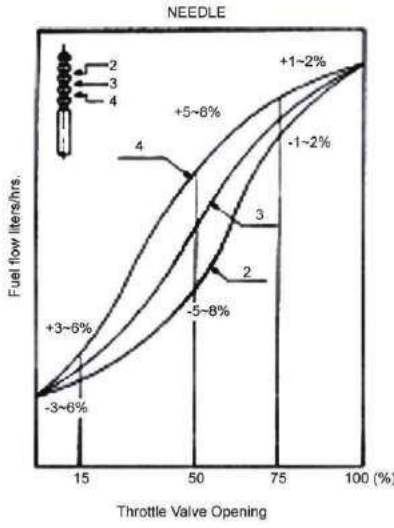

A carburetor with a piston -type throttle valve is also called a variable venturi-type carburetor. In this type of carburetor, the needle jet and the needle serve to control a proper air-fuel mixture ratio during the so-called medium throttle valve opening (between 1/4 and 3/4 opening). The right combination of needle jet and needle will have a major bearing on the engine performance at partial load. The jet needle tapers off at one end and the clearance between the needle and the needle jet increases as the throttle valve opening gets wider. The air -fuel mixture is controlled by the height of the needle positioning clip that is inserted into one of the five slots provided in the head of the needle. The variation of fuel flow based on the height of the clip is shown in Fig. 13.

Figure 14

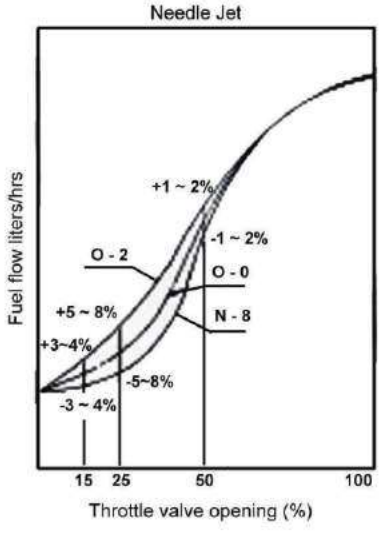

Generally, it is easier to evaluate and select a needle jet than it is to select a jet needle. The reason is taht he needle jet size are arranged on a linear scale, with each size increasing in increments. (For a thorough explanation of needle jet sizes please refer to Chapter 5) Jet needles are not cataloged according to a linear size pattern or a rich lean scale. The most effective way to determine the needle jet / jet needle relationship is to visualize the jet needle as a tool for setting the fuel delivery curve, or the it shape of the fuel delivery according to the throttle opening. The needle jet controls the fuel delivery rate, either increasing or decreasing the fuel delivery according to the profile of the needle being used. Sudco suggests that initially, experiments should be limited to changes in needle jet size. Once a satisfactory size has been identified, experiment with needle clip position to obtain the best driveability and roll-on performance. if one is working with an O.E.M. Mikuni carburetor, it is safe to assume that the manufacturer has already selected the proper needle or "fuel curve" for that motorcycle and changing the needle profile will complicate the tuning process Once the correct needle jet size has been identified and it becomes apparent that a change in needle profile is necessary, then refer to the needle dimension charts in Chapter 5.

To evaluate the performance of the needle jet, run the motorcycle in the third gear at 1/4 throttle, taking note on how the engine accelerates from 1/4 to 1/2 throttle only. The engine should respond cleanly and crispy without sputtering or bogging. It may be useful to try experimenting with clip positions to decide if a problem is a rich or lean condition. If the engine responses is better at a lean clip position, it may be necessary to change to a leaner needle jet. Sudco suggests that it is best to use as lean a needle jet as possible, as this component will have the greatest effect on fuel economy, emission, and general driveability. If a leaner needle jet is installed and there is no negative impact on performance, and no positive effect, continue working in the direction of "lean" until there are negative results and go back up one size.

D. - Selection of the Main Jet

First, do the following on a flat road.
1) Select the largest main jet (the limit of a rich mixture) which can give you the maximum speed). In this case, select the engine speed according to the dimensions of the test course.
2) Compare the gain in speed of 25-30 MPH to maximum desired speed, by using different sizes of main jets.
3) Check the exhaust fumes and read the spark plug (selection of the spark plug should be made based on the thermal value that would best suit power output of the engine.

Next, compare in the racing course, the test results you obtained from above. The points to be checked, among others, are:

1) Smooth and steady operation of the engine at as high a speed as possible under varying operating conditions such as shifting of the gears, changes in road conditions, ascending and descending slopes, etc.
2) Sustained operation at low speeds and at heavy engine load.
3) Sustained operation at high speeds (without knocking or seizure).

CAUTIONS: ***Selection of too lean amain jet may cause severe engine overheating, and subsequent piston seizure. Fig. 12 shows comparison of fuel flow curves. The straight line is for Model C main jet and the dotted line for Model A and B main jets. In each model of main jet, different sizes within the range of +10% were tried.***

Figure 12

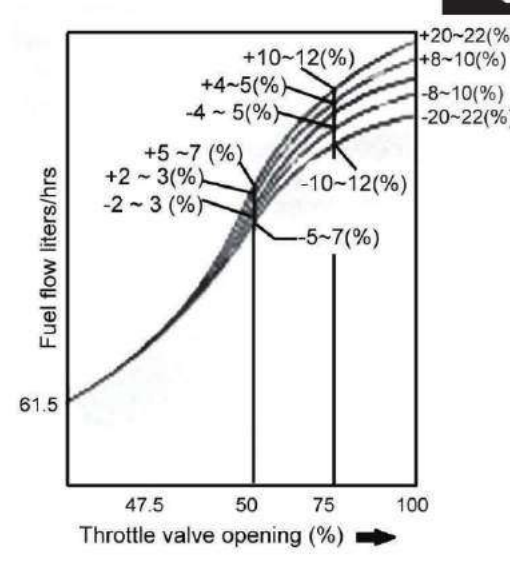

6. MAINTENANCE

A carburetor consists of various precision machined parts such jets, needles, valves, etc. Therefore, care should be exercised, when removing
jets or disassembling the carburetor for cleaning.

1) Proper tools should be used for disassembling and reassembling of jets. Handle watch part carefully to avoid scratches, bending, etc.

2) Wash the jets and the carburetor properly in solvent and blow them out with compressed air.

3) For carburetors whose main jet can be replaced from the outside, an "O" ring is used to prevent leakage of fuel. When you fit the "O' ring, apply a little lubricant or fuel.

4) It is important to maintain the fuel level in the carburetor. Do not touch the float arm, when disassembling the carburetor. If the float arm is bent accidentally, adjust the height of rib to the specific measurement (refer to Fig 18).

7. TUNING CARBURETOR RACING

The maximum output of the engine depends on:

1) The amount of air drawn into the cylinders

2) Whether an air fuel mixture is delivered to the cylinders in a proper ratio.

Since the amount of air that is drawn into the carburetor varies with the temperature, the atmospheric pressure, humidity, etc., the mixture ratio is also changed. It is important; therefore, that the fuel flow be adjusted in accordance with the altitude of the racing course and meteorological conditions prevailing.

A. - Incoming Air in Relation to Meteorological Conditions

The amount of air drawn in to the cylinders is influenced by such factors as the altitude, the temperature, the humidity, etc. Supposed that the amount of air sucked into the cylinders at an elevation of zero is taken as 100 (the temperature and humidity in this ease are considered constant). The amount of air in question decreases in proportion to a rise in elevation as shown in Fig.19. Reduction in the amount of air drawn into the cylinders changes the air-fuel mixture ratio, with the result that the power output drops markedly. Fig.20 shows the relation between a rise in temperature and the amount of air drawn into the cylinders (in this case, the atmospheric pressure (elevation0 and the humidity are considered unchanged and the amount of air going into the cylinders at 32 degrees F (0 degrees C) is taken as 100. In this case of the engine for racing where the maximum output is constantly called for, it is to tune up the engine by making a matching test the carburetor in accordance with the temperature and other conditions on the racing course.

Model	VM16-519	VM18-144	VM20-273	VM22-133	VM26-8074
H (mm)	24~26	20~22	20~22	24~26	15~17
VM26-606	**VM30-83**	**VM34-168**	**VM36-4**	**VM38-9**	**VM44-3**
22~24	22~24	22~24	17~19	17~19	17~19

Figure 19

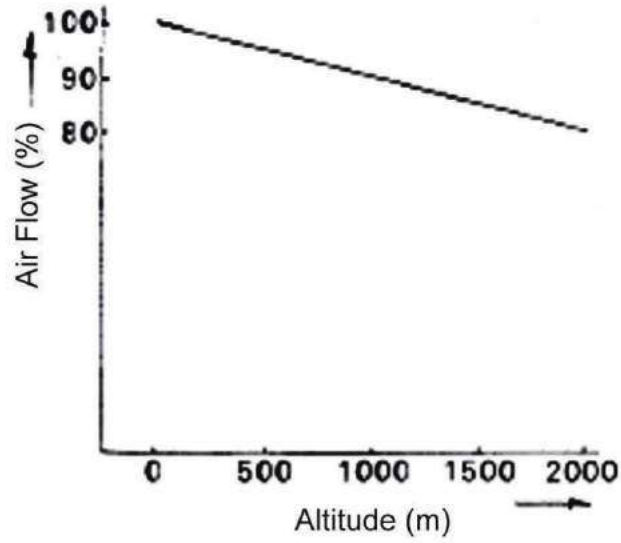

Figure 20

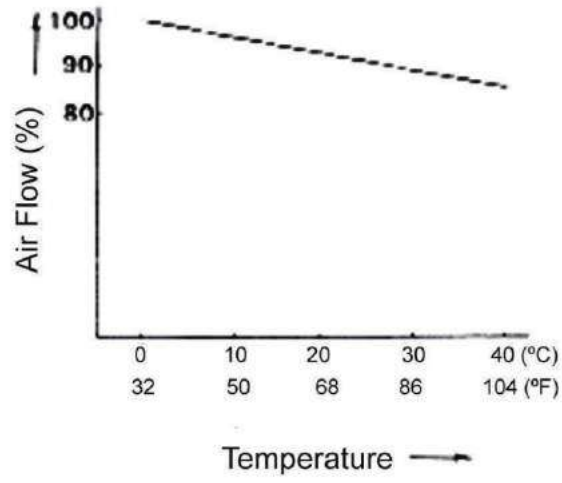

MIKUNI Carburetor Synchronization

Motorcycle carburetor synchronization is best described as a process where it becomes necessary to keep tow, three, or four, engines running at exactly the same speed, where each cylinder on the motorcycle is a separate engine. In order to match the speed of each cylinder to the next, the slide lift must be exactly the same on each carburetor. Given an engine with perfect cylinder compression, ignition timing, and mixture quality, all cylinders will run at exactly the same speed when the carb are in exact mechanical synchronization.

Synchronizing Mikuni VM, TM, and TMX Single Carbs

There are two sync procedures to execute when setting up single type carbs on multis. The first is idle sync and the second is cable sync, to be done in that order.

The easiest way to start the idle sync process is to choose an arbitrary slide lift setting. Set each one at exactly the same lift with the throttle stop screw (idle speed screw). Generally a 1mm (.040") under each slide to match the slide lifts at idle. Check the air screw/fuel screw settings and match as necessary at this time. Mount the carburetors and attach the throttle cables. Start the engine and adjust the idle speed screws in or out, counting each 1/2 turn and settling each carburetor the same amount, bearing in mind that each slide needs to be kept at equal lift. The engine will idle smoothly when all the slides are adjusted properly. Turn the engine off.

Now that the idle sync has been established, it is possible to sync the cables that lift each slide. Using the cable adjuster mounted on each carburetor top, take out all the cable free play until the slide starts to lift off idle. Back this adjustment off until the slide just returns to idle. Do this for each carburetor. The cables are now roughly synchronized. Put s finger on the slide of the #1 carburetor and watch the slide on the #2 carburetor. Slowly twist the throttle to lift the slides, both slides should lift off idle at the same instant. If the slides are out of sync, adjust the retarded carburetor with the cable adjuster on the carb top to match the other carb. repeat this process, matching the #3 carburetor to the #2 carburetor and so on for all of the cylinders. Check the cable free play at the twist throttle, there should be about 1mm throttle free play. Double check and tighten all lock nut and screw as necessary.

Synchronizing Mikuni Smoothbore Carburetors

Sudco recommends that all smoothbore type carburetors be synchronized mechanically rather than with vacuum gauge or mercury manometer ("carb stick").There are several reasons that vacuum synchronization is not recommended.

1. The sync adjustments on smoothbore carburetors are underneath the top cover of the carburetor, which when removed exposes a large vacuum leak to the cylinder being adjusted, resulting in inconsistent vacuum levels from one carb to the next.

2. The vacuum shown on a gauge is a result of several engine conditions: cylinder compression, spark quality and timing, mixture quality, and carburetor slide lift. If any one of these parameters is not perfect it will become increasingly difficult to get a consistent vacuum level, regardless of slide lift.

3. Carburetor circuitry is throttle position sensitive. If the slides are not in exact mechanical sync, then one carburetor may be operating on a different circuit than the others.

Mechanically Synchronizing Smoothbore Carburetor

1. Remove the carburetor from the engine and drain float bowl.

2. Remove the top cover from each carburetor and note which carburetor doe snot have a sync adjuster. Some designs will have adjusters on all the carbs, some will have a fixed or non-adjustable carb. Usually #2 or the one closest to the throttle wheel.

3. With the carburetors on the work bench and the spigot or engine side of the carbs facing you, adjust the idle speed screw so that the slides are nearly closed.

4. Place a piece of fine wire or rod about 0.20" (.5mm) thick underneath the fixed adjustment carburetor slide. Use the idle speed screw to adjust the tension on the wire gauge, which should slip between the slide and carburetor bore with some slight drag. If your particular carburetor design does not have a fixed adjuster, then use the carburetor closest to the throttle cable wheel and set the idle adjuster as described above. This is now the baseline carburetor.

5. Using the same piece of wire or exact duplicates, check the slide lift of all the other carburetors against the wire gauge. If the drag on the wire is not the same as the baseline carburetor, adjust the slide lift of each carburetor with the sync adjuster located at the throttle shaft/lift arm joint, so that the drag on the wire is the same as the baseline carburetor.

Sometimes, the sync adjusters are adjust nuts and lock screws, where the slide lift adjustment is made by turning the nut and then is locked in place with the screw in the center. Double check the adjust method used on your particular carburetor and proceed carefully.

6. Once all the slides have been synchronized, open and close the throttles several times, checking for binding or sticking. Double check the synchronization at idle by sight. Turn the idle speed adjustment put and watch the clearance between the slides and their carb bores. As the clearance nears zero, any difference in slide lift will become apparent. correct the differences as necessary.

7. Replace the carburetor tops, check the gaskets for leaks. Double check the fuel screw / air screw setting at this time, re-set to the standard specification. Install the carburetor and adjust the throttle cables for correct free play at the throttle 0.20" to 0.40" (0.5 to 1.0mm)

8. Now that the carburetor have been properly synchronized, it is possible to use a vacuum gauge or carb stick to optimize the fuel screw/ air screw settings. With the engine idling, experiment with the mixture screw while looking for an increase in manifold vacuum. The screw setting which produces the highest vacuum level is generally the correct position.

MIKUNI HSR42/45/48 Carburetors (General Tuning Procedures)

General Tuning Procedures

Your Mikuni HSR42 is fitted with the tuning parts we found to work with a majority of engine tuning combinations. However, the tremendous number of differing exhaust systems and cams available for Harley engines make it impossible to accommodate all possible combinations with one carburetor set-up. You will probably find that the HSR42 will run perfectly on your engine without exchanging any parts. But if it doesn't you may alter its tuning to suit your engines needs by following this guide.

There are many more replaceable parts that affect tuning in the HSR42 than in the stock Harley carburetor. With these parts you will be able to precisely tailor the HSR42 to your engines requirements throughout its rpm and throttle setting range.
Each tuning system is easy to modify and diagnose, but only when you understand what each system does and how it works. Before making any alterations to the HSR42, if any are needed at all, read the section of this manual describing the various tuning components and their functional range.

There is simply no point in attempting to tune any carburetor unless the engine is completely sound. Valves and rings must seal properly, the ignition timing must be correct and the spark plugs clean and gapped. Some exhaust systems may also make carburetor tuning difficult. For instance, it is very difficult to get smooth responsive carburetion with straight and open pipes. If you have nay doubts about the condition of your engine, tune and test it before beginning what could be a frustration and unproductive effort to fix another problem with the carburetor.

Pilot System - Tuning the Pilot Circuit

The first step in tuning this carburetor is to get the idle circuit correctly adjusted. And the first step in this procedure is to adjust the air screw fir the best idle. Mikuni sets the air screw two turns out during assembly. This is the position we have found to be right most of the time. If the screw position had been altered, gently bottom it and reopen it to two turns out from the fully closed position.

Next, ride the bike until the engine is at it normal operating temperature. This may require several miles a highway speeds. If you have an oil temperature gauge, ride until the oil temperature is at or near150.

With the machine vertical and the engine idling near 1,000 rpm, adjust the air screw out until the engine again slows or becomes irregular, then begin turning the screw out until the engine again slows or begins an irregular idle. Count the number of turn between the too rich and too lean positions.

Set the air screw-mid-way between the too rich and too lean positions. You may further refine the air screw position with further riding experience, but this will be vary close to the perfect idle mixture setting.

If you allow the engine to get too hot during the air screw adjustment procedure, the resulting adjustment will probable be on the lean side of correct. If you have a large fan, use it while adjusting the mixture. If you do not have one, you may need to take him out for a short ride to cool the engine back to normal temperature.

NOTE: IF the best idle is achieved with the air screw less than 1/4 turn out, the pilot jet is too small and will need to be changed.

On the other hand, if the air screw must be more than three turns out for best idle, the pilot jet is too large and will need to be changed. Once you have a good idle with the air screw within its range, you may proceed to the next stage: Tuning the Jet Needle.

Main System - Tuning the Jet Needle

(Initial straight portion)

It is unlikely that you will need to change the jet needle from the one supplied in your HSR42. However, in case you do, you should be aware of how it works and how to tell if the one you have is too large (leaner) or too small for your particular engine set up.

The initial straight portion of the jet needle affect the mixture from the idle to approximately 1/4 throttle, at which point the needle's tapered portion takes over.

Lean Condition

If the jet needle is too lean (large), part throttle acceleration will be flat. There may also be some detonation during part throttle acceleration, although this can be caused by other factors. A lean jet needle will also result in a slow warm-up.

If part throttle acceleration is flat, install one size smaller jet needle and compare the performance. If acceleration is improved, leave the smaller jet needle in and take a fairly long ride at steady speeds to give the spark plugs time to color evenly.

Take a spark plug wrench with you and after a few miles at steady speeds, stop and remove a plug for inspection. Be careful as you stop not to operate the throttle. The extra fuel from the accelerator pump can cause a false plug reading. The body of a spark plug can be from light gray to brown to dark gray. If the plug body is black and has a sooty appearance the jet needle is probably too rich and a larger one will need to be fitted.

Rich Condition

While a black sooty spark plug is a sure sign of richness, there are others that are a bit more subtle. If your engine responds crisply at low throttle when it is cold, chances are the jet needle is one size smaller than it needs to be. Assuming, of course, that the idle circuit is correctly tuned.

Poor fuel mileage is another sign of richness and because of the way most of us ride our Harleys, the richness is usually the result of a jet needle that is too small. The color of the end of the exhausts is a sign of free gasoline. If the exhaust color is black, chances are you can enlarge the size of the jet needle.

It may be that you prefer a jet needle that is slightly on the rich side of the correct range. A slightly over-rich condition lets a Harley accelerate better at very low rpm's and from very low throttle settings. Be aware that you will lose some fuel economy if you choose to do this.

Tuning the Jet Needle (Tapered portion)

Like the idle circuit of the jet needle, the tapered portion has its range of operation. the tapered portion has an increasing effect on fuel mixture from about 1/4 throttle opening as the tapered section leaves the opening of the needle jet/ between 1/2 and 3/4 throttle the jet needles influence is the greatest and it controls most of the fuel flow.

All jet needle and main jet testing should be done with the engine near the middle of its rpm range. Start acceleration tests at about 50 mph. The best jet needle position will give the strongest acceleration.

With the engine at operating temperature, accelerate at 1/2 to 3/4 throttle, in top gear from 50mph or so. If acceleration seems soft or flat and the engine is slow to respond when the throttle is quickly opened from 1/2 to 3/4 throttle position, the mixture is too lean. Raise the jet needle one notch and repeat the test.

On the other hand, if acceleration is crisp but the engines hesitated or staggers as the throttle suddenly shout down from 3/4 to 1/2 throttle, the mixture is too rich. Lower the jet needle one notch and repeat the test.

The jet needle postilion will be near correct when acceleration is crisp at mid rpm yet the engine does not load up during throttle shut down.

Tuning the Main jet

You could in fact remove the main jet from our Mikuni HSR42 and the engine would run fine until the throttle was near the 3/4 mark. The jet needle and needle jet restrict the amount of fuel getting into the engine until about that point. There is no point in changing main jets if a mixture problem exists below the 3/4 throttle position.

The main jet is the last jet you need to deal with and is the easiest to get right. IF you have the room, the most effective method for getting the main jet right is to measure the time required to accelerate between two points. The start and end markers should be spaced so that starting at about 35 mph at the first marker will have you going past the second at near 55 mph.

Set up markers that are far enough apart, on a safe road, to meet the conditions mentioned above. When pass the first marker roll the throttle fully open and have a friend (it's easier with help) measure the time need to her to the second marker. The jet that gives the shortest time is the correct jet. This method is simple but effective.

Functional Tuning Rage of Components Parts

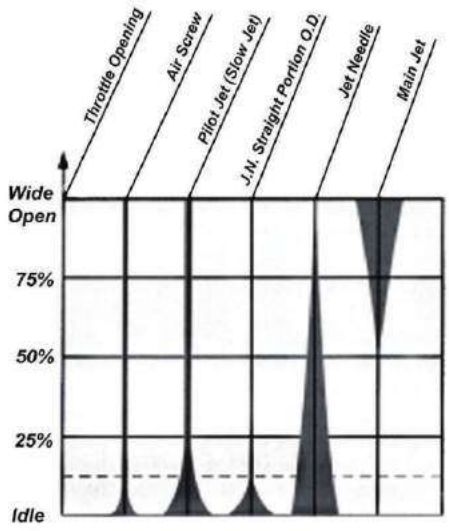

Tuning the Accelerator Pump

The beginning point of the pump stroke is adjusted with the adjusting screw #1 on the white plastic pump lever. To start the pump sooner, back the crew out. Turn the screw in to make the pump start its stroke at a larger throttle opening. Most engines perform best if the pump begins its stroke as soon as the throttle is moved from the idle position.

The end of the accelerator pump stroke is adjusted by the adjusting screw #2 located on the top of the carburetor just behind the pump lever. Best performance is generally achieved when the pump stroke ends before 3/4 throttle.

For best results, the accelerator pump nozzle should be pointed directly at the jet needle. The nozzle is held in place by the friction of an o-ring and can be turned easily with a pair of long nosed pliers, Nozzle adjustment should be made with a minimum of pump strokes to avoid flooding the engine.

Accelerator Pump System

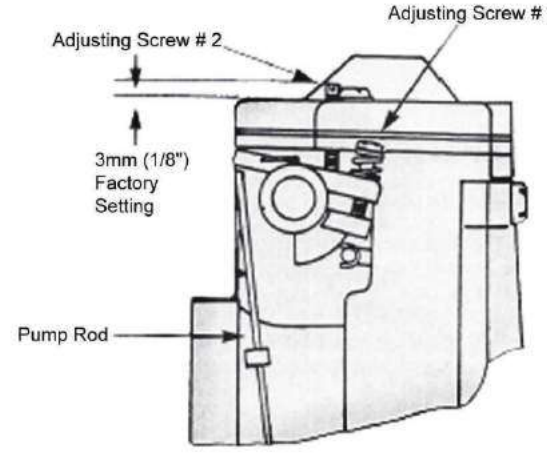

Nozzle adjustment should be made with a minimum of pump strokes to avoid flooding the engine.

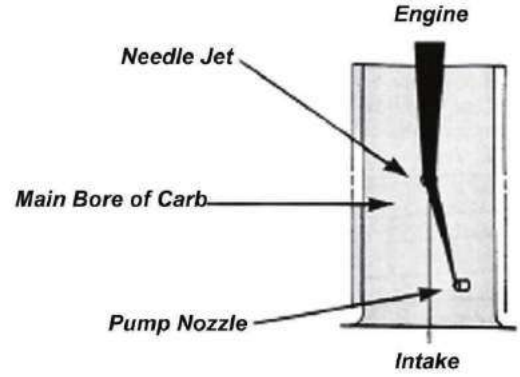

Servicing - HSR42/42 Carburetors

There are very few moving parts in the HSR series carburetor. This carburetor will not require much servicing, but there are a few items to be mentioned to assure good performance season after season.

A. If the motorcycle is to be stored for any length of time the carburetor float bowl should be drained.
B. The float drain plug should be removed periodically and cleaned of any sediment that may have settled during long periods of use.
C. DO NOT drill or modify any part of this carburetor for any reason and the result will surely be more problems. Refer to this Tuning guide to correct any problems that you may have.
D. If a jet or passage does become plugged, use only carburetor cleaner and compressed air. DO NOT push a drill or any other object through the jet or passage to clean them.
E. If the air filter is dirty and requires servicing, follow the steps found on the next page. Typical service is done after about 2,000 miles of use.
F. The fuel level in the carburetor will probably never need adjusting; however, if a problem has been diagnosed as a fuel level that is too high or too low, adjustment can be done as shown.

MIKUNI HSR42/45/48 Carburetors (General Tuning Procedures)

A. Invert the carburetor and remove the float bowl.
B. The float assembly's actuator tab should just begin contact with the Needle Valve assembly when the bottom if the float is 18mm from the carburetor bottom surface as shown.
C. If adjustment is required, adjust by bending the actuator tab.

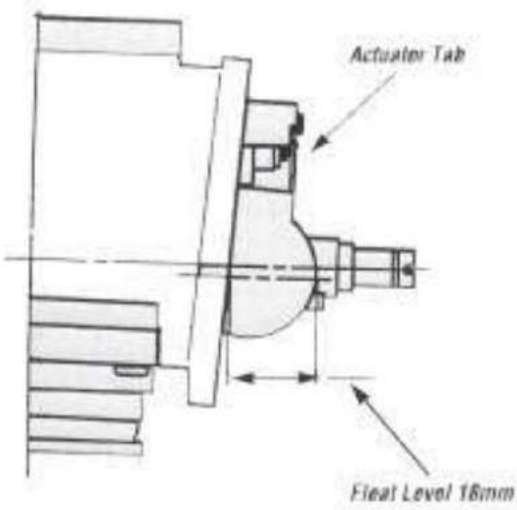

Air Filter Service Instructions

A. Pre Cleaning: Tap the element to dislodge any large embedded dirt, then gently brush with a soft bristle brush.

B. Pan Cleaning: Soak or roll element in a large shallow pan of K&N air filter cleaner (1/4 the depth of 1 pleat). Remove immediately and let sit for approximately 10 minutes.

C. Rinse off: Rinse off the element with low pressure water, tap water is OK. Always flush from the inside of the filter out. This removes the dirt and does not drive into the filter. *IMPORTANT:* Air dry only.

D. Oiling: After the filter has dried always re-oil before using. Apply K&N air filter oil with ones pass per pleat. Wait 10 minutes and re-oil any white spots still showing. IMPORTANT: Do not use gasoline or cleaning solvent to service the filter element as this will damage the filter.

Check for:	Remedy:
Overflow	
1. Worn needle valve or dirty valve seat.	**1.** Replace or clean
2. Improper fuel level in float bowl.	**2.** Adjust level.
3. Damaged float bowl O-ring gasket.	**3.** Replace O-ring.
4. Loose float bowl screws.	**4.** Tighten screws.
5. Pressurized fuel tank.	**5.** Check for proper fuel tank venting.
6. Broken needle valve O-ring.	**6.** Replace O-ring.
Poor Idling	
1. Fuel filler cap not venting.	**1.** Replace filler cap
2. Idle speed improperly adjusted.	**2.** Adjust idle speed.
3. Clogged bypass or outlet.	**3.** Clean carburetor.
4. Clogged pilot jet.	**4.** Clean jet.
5. Loose pilot jet.	**5.** Tighten jet.
6. Air leak in system.	**6.** Tighten manifold or hose clamps.
7. Choke not fully closed.	**7.** Adjust cable.
8. Crank vent blocked.	**8.** Remove blockage from hose or passage.
Poor Fuel Economy	
1. Filler cap not venting.	**1.** Replace filler cap
2. Fuel level too high (overflows).	**2.** Adjust level.
3. Loose jets.	**3.** Tighten jets.
4. Choke not fully closed.	**4.** Adjust cable.
5. Dirty air cleaner.	**5.** Clean or replace
Poor Acceleration	
1. Clogged accelerator system.	**1.** Clean.
2. Clogged pilot jet.	**2.** Clean.
3. Fuel level too low.	**3.** Adjust level.
Hard Starting	
1. Choke not operating properly.	**1.** Adjust cable.
2. Generally dirt carburetor.	**2.** Clean
3. Air leak in system.	**3.** Tighten manifold or hose clamps.
4. Excessive use of throttle before starting engine.	**4.** Do not open throttle before starting.
Poor Performance on the Road	
1. Fuel filler cap not venting.	**1.** Replace filler cap.
2. Fuel level incorrect.	**2.** Adjust level.
3. Main jet loose.	**3.** Tighten Jet.
4. Air leak in system.	**4.** Tighten manifold or hose clamps.
5. Generally dirty carburetor.	**5.** Clean
6. Dirty air filter.	**6.** Clean or replace
Poor High Speed Performance	
1. Fuel filler cap not venting.	**1.** Replace filler cap.
2. Loose man jet.	**2.** Tighten jet.
3. Incorrect Fuel level	**3.** Adjust level.
4. Strainer in fuel tank dirty.	**4.** Clean.
5. Clogged main jet.	**5.** Clean.

MIKUNI HS40 Carburetors (General Tuning Procedures)

Your Mikuni HS40 is fitted with the tuning parts we found to work with a majority of engine tuning combinations. However, the tremendous number of differing exhaust systems and cams available for Harley engines make it impossible to accommodate all possible combinations with one carburetor set-up. You will probably find that the HS40 will run perfectly on your engine without exchanging any parts. But if it doesn't, you may alter its tuning to suit your engines needs by following this guide.

There are many more replaceable parts that affect tuning in the HS40 than in the stock Harley carburetor. With these parts you will be able to precisely tailor the HS40 to your engine's requirements throughout it rpm and throttle setting range.

Each tuning system is easy to modify and diagnose, but only when you understand what each system does and how it works. before making any alterations to the HS40, if any are needed at all, read the section of this manual describing the various tuning components and their functional range. There is simply no point in attempting to tune any carburetor unless the engine is completely sound. Valve and rings must seal properly, the ignition timing must be correct and the spark plug clean and gapped. Some exhaust system may also make carburetor tuning difficult. For instance, it is almost impossible to get smooth responsive carburetion with straight and open pipes. If you have nay doubts about the condition of your engine, tune and test it before beginning what could be frustrating and unproductive effort to fix another problem with the carburetor.

Tuning the Idle Circuit (Pilot System)

The first step in tuning any carburetor is to get the idle circuit correctly adjusted. And the first step in this procedure is to adjust the pilot screw position for best idle. Mikuni sets the pilot screw at three turns open during assembly. This is the position we have found to be right most of the time. If the screw position has been altered, gently bottom it and re-open to three turns out form the fully closed position.

Next, ride the bike until the engine is at its normal operating temperature. This may require several miles at highway speeds. If you have an oil temperature gauge, ride until the oil temperature is at or near 150 degrees.

With the machine vertical and the engine idling near 1,000 rpm, adjust the pilot screw in one half turn at a time until the idle either slows or becomes irregular. The pilot screw is now too far and the idle mixture is too lean. Pause for a few seconds at each half turn to allow the engine to settle down and give a clear indication of the mixture strength.

Now, begin turning the screws out in half turn intervals until the engine again slows or begins an irregular ride. Count the turns between the lean and too rich position.

Set the pilot screw mi-way between the too-lean and too-rich positions. You may further refine the pilot screw position with further riding experience but this will be very close to the perfect idle mixture setting.

If you allow the engine to get too hot during the pilot screw adjustment procedure, the resulting adjustment will probably be on the lean side of correct. If you have a large fan use it while adjusting the idle mixture. If you do not have one, you may need to take time out for a short ride to cool the engine back to normal temperature.

Remember, if the best ride is achieved with the pilot screw less than 1/4 turn out, the pilot jet is too large or the pilot air jet is too small. One or the other will need to be changed.

On the other hand, the pilot screw must be more than three and a half turns out for best idle, the pilot jet is too small (or the pilot air jet is too large). One or the other will need to be changed.

If the pilot screw's best idle position is outside the 1/4 to 3-1/2 turn range., the carburetor's mixture will be either too lean or too rich as the throttle is just being raised off the idle position. Once you have a good idle with the screw within this range, you may proceed to the next stage: turning the needle jet. The pilot air jet is selected by riding at 15 to 30 mph. If the engine surges or detonated (lean), the pilot air jet should be reduced in size. Example: 1.1 to 1.0. If on the other hand the engine misfires or there is after burn from the exhaust (rich), it would indicate the pilot air jet is too small. If the air jet is changed, the pilot screws should be re-checked and adjusted if needed.

As mentioned earlier, the idle circuit has an important effect on mixtures up to quarter throttle. However the idle system's effect on mixture strength overlaps the effect of the needle jet in this range. If the idle circuit is incorrectly adjusted, it will not be possible to get the needle jet correct.

Tuning the Jet Needle (Tapered portion)

It is unlikely that you will need to change the needle jet from the one supplied in your Mikuni HS40. However, in case you do, you should be aware of how it works and how to tell if the one you have is too large (richer) or too small for your particular engine set up.

The needle jet's effect on mixture is limited from about 1/16 throttle, where the main system begins to deliver fuel, to 1/4 throttle, when the tapered section of the needle begins to emerge from the mouth of the needle jet.

Lean Condition

If the needle jet is too (lean) small, part throttle acceleration will be flat. There may also be some detonation during part throttle acceleration, although this can be caused by other factors. A lean needle jet will result in a slow warm-up.

If part throttle acceleration is flat, install one size larger needle jet and compare the performance. If acceleration is improved, leave the larger jet in and take a fairly long ride at steady speeds to give the spark plugs time to color evenly.

Take a spark plug wrench with you and after a few miles at steady speeds, stop and remove a plug for inspection. Be careful as you stop not to operate the throttle. The extra fuel from the accelerator pump can cause a false plug reading. The body of a spark plug can be from light gray to brown to dark gray. If the plug body is black and has a sooty appearance the needle jet is probably too rich and a smaller one will need to be fitted.

Rich Condition

While a black sooty spark plug is a sure sign of richness, there are others that are a bit more subtle. If your engine responds crisply, at low throttle when it is cold, chances are the jet needle is one size larger than it needs to be. Assuming, of course, that the idle circuit is correctly tuned and adjusted.

Poor fuel mileage is another sign of richness and because of the way most of us ride our Harleys, the richness is usually the result of a needle jet that is too large. The color of the end of the exhausts is a sign of a mixture strength. If the exhaust color is black, chances are that you can reduce the size of the needle jet.

Tuning the Jet Needle

Like the idle circuit, the jet needle, within its range of operation has gradually increasing effect on fuel mixture as the throttle is opened. From about 1/4 throttle, where the tapered section of the needle leaves the mouth of the needle jet, the jet needle has a major effect on the amount of fuel entering the engine. Between 1/2 and 3/4 throttle the needle's influence is greatest and it controls most of the fuel flow.

All jet needle and main jet testing should be done with the engine near the middle of its rpm range. Start acceleration tests at about 50 mph. The best jet needle position will give the strongest acceleration.

With the engine at operating temperature, accelerate at 1/2 to 3/4 throttle, in top gear from 50 mph or so. If acceleration seems soft or flat and the engine is slow to respond when the throttle is quickly opened from 1/2 to 3/4 throttle position, the mixture is too lean. Raise the jet needle one notch and repeat the test.

On the other hand, if acceleration is crisp but the engines hesitate or staggers as the throttle suddenly shut down from 3/4 to 1/2 throttle, the mixture is too rich. Lower the needle one notch and repeat the test. The jet needle position will be near correct when acceleration is crisp at mid rpm yet the engine does not load up dining throttle shutdown.

Tuning the Main jet

You could in fact remove the main jet from our Mikuni HS40 and the engine would run fine until the throttle was near the 3/4 mark. The needle and needle jet restrict the amount of fuel getting into the engine until about that point. There is no need to change main jets if a mixture problem exists below the 3/4 throttle position.

The main jet is the last jet you need to deal with, and it is the easiest to get right. The most effective method for getting the main jet right is to measure the time required to accelerate between two points. The start and end markers should be spaced so that starting at about 35 mph at the first marker will have you going past the second at near 55 mph.

Set up markers that are far enough apart, on a safe road, to meet the conditions mentioned above. When pass the first marker roll the throttle fully open and have a friend (it's easier with help) measure the time need to her to the second marker. The jet that gives the shortest time is the correct jet. This method is simple but effective.

Accelerator Pump Tuning - Fig 9

The beginning point of the pump stroke is adjusted with adjusting screw #1 on the white plastic pump lever. To start the pump sooner, back the crew out. Turn the screw in to make the pump start its stroke at a larger throttle opening. Most engines will perform best if the pump begins its stroke as soon as the throttle is moved from the idle position.

The end of the accelerator pump stroke is adjusted by the adjusting screw #2 located on the top of the carburetor just behind the pump lever. Best performance is generally achieved when the pump stroke ends before 3/4 throttle.

It is important that the nozzle's direction be correctly set. The nozzle is held in position by the friction of its o-ring and can be turned quite easily with a pair of long nosed pliers. Rotate the nozzle until the fuel stream strikes the needle. This will ensure an even distribution of fuel between the front and rear cylinders. Nozzle adjustment should be made with the engine stopped and with a minimum of pump strokes to avoid flooding.

Fig. 9 - Accelerator Pump Tuning

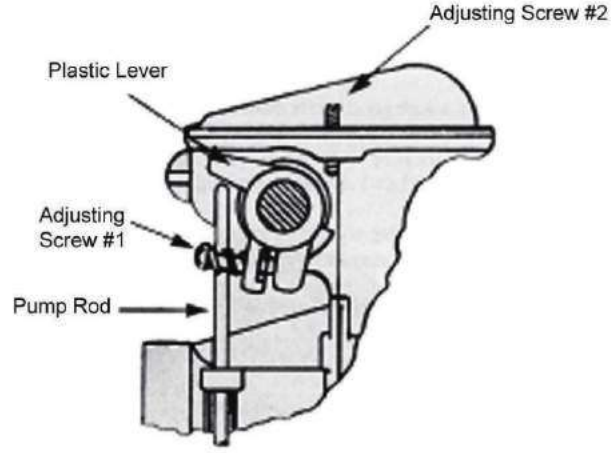

Fine Tuning the Pilot System

Note: Before you apply any of the information in this section be sure that the basic pilot system is correct. Be sure that the engine idles smoothly with the mixture screw between one and three turns out from the seated position.

The pilot and pilot air jets have slightly different effects on mixture strength within the effective tuning range of the pilot system: 0 - 1/4 throttle. When you change the pilot jet, it will have a slightly greater effect on mixture strength at zero throttle than it will be at 1/4 throttle.
On the other hand, when you change the pilot air jet, it will have a slightly greater effect above 1/8 throttle than it will below that setting.

If your engine has slightly soft acceleration just as the throttle is raised from the off idle position, the size balance between the pilot jet and pilot air jet may be incorrect. If the softness is more pronounced when the engine is at normal running temperature, install a larger (leaner) pilot air jet. if there is minor coughing or "popping" through the carburetor when the engine is cool, install a smaller (richer) pilot air jet.

After you have changed the pilot air jet, you will need to re-adjust the mixture screw. If the new mixture screw adjustment is outside idle at more than three turn range, change the pilot jet. If the mixture screws give idle at more than three turns, install the next larger (richer) pilot jet. If on the other hand, correct idle requires less than one turn, fir the next smaller pilot jet.

It is unlikely that changing the pilot jet will have an adverse effect on the pilot air jet requirement.

Important Note: Detecting Air Leaks

While the engine is idling, spray carburetor or brake cleaner around the areas of the intake tract where there are mating surfaces, i.e., cylinder head to compliance fitting, If there is an air leak the engine RPM will increase or decrease when the spray covers or is drawn through the leaking area into the engine.

MIKUNI HS40 Carburetors (General Tuning Procedures)

There are very few moving parts in the HS series carburetor. This carburetor will not require much servicing, but there are a few items to be mentioned to assure good performance season after season.

A. If the motorcycle is to be stored fir any length of time the carburetor float should be drained.

B. The float drain plug should be removed periodically and cleaned of any sediment that may be settled during long periods of use.

C. DO NOT drill or modify any part of this carburetor for any reason ad the result will surely be more problems. Refer to this Tuning guide to correct any problems that you may have.

D. If a jet or passage does become plugged, use only carburetor cleaner and compressed air. DO NOT push a drill or any other object through the jet or passage to clean them.

E. The fuel level in the carburetor will probably never need adjusting; however, if a problem has been diagnosed as a fuel level that is too high or too low, adjustment can be shown in Figure10.

F. If the air filter is dirty and requires servicing, follow these steps. Typical service is done after about 2,000 miles of use.

Air Filter Service Instructions

A. Pre Cleaning: Tap the element to dislodge any large embedded dirt, then gently brush with a soft bristle brush.

B. Pan Cleaning: Soak or roll element in a large shallow pan of K&N air filter cleaner (1/4 the depth of 1 pleat). Remove immediately and let sit for approximately 10 minutes.

C. Rinse off: Rinse off the element with low pressure water, tap water is OK. Always flush from the inside of the filter out. This removes the dirt and does not drive into the filter.
IMPORTANT: Air dry only.

D. Oiling: After the filter has dried always re-oil before using. Apply K&N air filter oil with ones pass per pleat. Wait 10 minutes and re-oil any white spots still showing.
IMPORTANT:
Do not use gasoline or cleaning solvent to service the filter element as this will damage the filter.

Float Level Adjustments

A. Invert the carburetor and remove the float bowl

B. The float assembly's actuator tab should just begin contact with the Needle Valve assembly when the bottom of the float is 18mm from the carburetor bottom surface as shown.

C. If adjustment is required, adjust by bending the actuator tab.

Check for:	Remedy:
Overflow	
1. Worn needle valve or dirty valve seat.	**1.** Replace or clean
2. Improper fuel level in float bowl.	**2.** Adjust level.
3. Damaged float bowl O-ring gasket.	**3.** Replace O-ring.
4. Loose float bowl screws.	**4.** Tighten screws.
5. Pressurized fuel tank.	**5.** Check for proper fuel tank venting.
6. Broken needle valve O-ring.	**6.** Replace O-ring.
Poor Idling	
1. Fuel filler cap not venting.	**1.** Replace filler cap
2. Idle speed improperly adjusted.	**2.** Adjust idle speed.
3. Clogged bypass or outlet.	**3.** Clean carburetor.
4. Clogged pilot jet.	**4.** Clean jet.
5. Loose pilot jet.	**5.** Tighten jet.
6. Air leak in system.	**6.** Tighten manifold or hose clamps.
7. Choke not fully closed.	**7.** Adjust cable.
8. Crank vent blocked.	**8.** Remove blockage from hose or passage.
Poor Fuel Economy	
1. Filler cap not venting.	**1.** Replace filler cap
2. Fuel level too high (overflows).	**2.** Adjust level.
3. Loose jets.	**3.** Tighten jets.
4. Choke not fully closed.	**4.** Adjust cable.
5. Dirty air cleaner.	**5.** Clean or replace
Poor Acceleration	
1. Clogged accelerator system.	**1.** Clean.
2. Clogged pilot jet.	**2.** Clean.
3. Fuel level too low.	**3.** Adjust level.
Hard Starting	
1. Choke not operating properly.	**1.** Adjust cable.
2. Generally dirt carburetor.	**2.** Clean
3. Air leak in system.	**3.** Tighten manifold or hose clamps.
4. Excessive use of throttle before starting engine.	**4.** Do not open throttle before starting.
Poor Performance on the Road	
1. Fuel filler cap not venting.	**1.** Replace filler cap.
2. Fuel level incorrect.	**2.** Adjust level.
3. Main jet loose.	**3.** Tighten Jet.
4. Air leak in system.	**4.** Tighten manifold or hose clamps.
5. Generally dirty carburetor.	**5.** Clean
6. Dirty air filter.	**6.** Clean or replace
Poor High Speed Performance	
1. Fuel filler cap not venting.	**1.** Replace filler cap.
2. Loose man jet.	**2.** Tighten jet.
3. Incorrect Fuel level	**3.** Adjust level.
4. Strainer in fuel tank dirty.	**4.** Clean.
5. Clogged main jet.	**5.** Clean.
6. Fuel level too low	**6.** Adjust Level.

Note: Extreme care should be used whenever removing the float pin; the pi is a "press fit" into the support bosses. If you must remove the pin for any reason, use caution to prevent breakage of the support bosses.

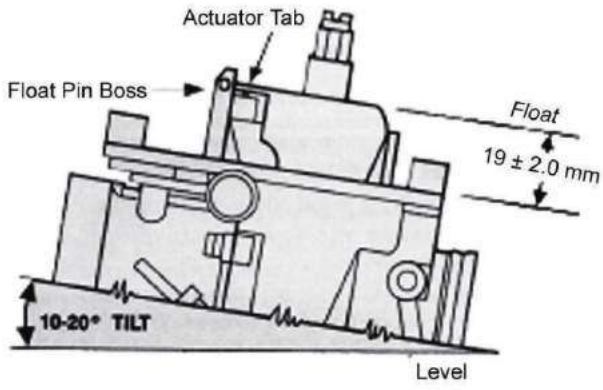

MIKUNI Super BN Introduction

Mikuni Super BN46 carburetor

Introduction to Super BN Carbs

The Super BN Carburetor for high performance application is the latest in a series of watercraft carburetors from Mikuni. the super BN earns its name because of the increased performance it delivers over previous Mikuni BN Carbs.

What differentiates the Super BM from previous BNs?

1) The fuel pump and jet sections are separate for easier maintenance.
2) It has an integral fuel filter.
3) The fuel pump capacity is increased by almost 20%.
4) Air flow is increased by 9%.
5) It is easily tunable with replaceable jets (in a wide range of sizes) and an array of other tuning components.

With the introduction of the Super BN Series of carburetors, Mikuni American has made a renewed commitment to the watercraft industry by researching carburetor tuning applications and disseminating this formation to the customer. In the past, jetting information was available there were sources. With this manual, Mikuni American is able to provide a more reliable and consistent source of approved technical information.

Carb Installation

CAUTION: Exercise care when changing carburetion components and anytime you work with the fuel system on your watercraft. work in a well ventilated area. Do not engage the starter while fuel lines are disconnected. Immediately clean up any fuel spill that might occur during carb installation.

A: As when installing any performance product, a degree of mechanical ability is required. If after reviewing the parts and instruction you don't feel that you can properly complete this installation and adjustment will save time, money and aggravation.

B: In mos cases your new Super BN Carburetor will be installed in
conjunction with an after-market manifold and flame arrestor/air filter
system. We recommend using ths manual, together with the applicable shop manual for your watercraft, and the instructions from the aftermarket manifold manufacturer to help you with the installation and tuning of the Super BN Carburetor.

C: Super BN carbs were designed to, and work best, in the down draft position. Many turners choose to mount Super BNs in more of a side draft position. This will work okay, as long as the carbs are oriented with the pump on top and the regulator portion down, otherwise the jet portion will constantly drain into the carb making calibration impossible.

D: How to determine the correct carb size to use.

The following recommendations are for performance application:

Piston Port and reed valve twin cylinder engines

1.) Up to 80 hp	SBN 44
2.) Up to 90 hp	SBN 46
3.) 90hp and up	Dual SBN 38, 44, or 46's

Rotary Valve engines

1.) Limited class	SBN 44/46's or dual SBN 38's
2.) Mod class	Dual SBN 44/46's

Three Cylinder engines

1.) Limited Class	Three SBN 38's
2.) Mod Class	Three SBN44/46's

E: All Applications

1) Use a new gasket between the carb(s) and the intake manifold.
2) Use flat washers and self-locking nuts to secure the carb(s).
3) Be sure that the fuel lines are of the correct diameter for the carb fittings. Secure all hose connections with cable ties or hose clamps.
4) If the primer fitting is not being used, plug or cap the fitting.
5) When installing the throttle cable, be sure to securely tighten the jam nuts. Allow free play at the throttle lever. Make sure that the throttle cable is not pulled open as the handlebars are turned from side to side; correct the cable routing if necessary.

F: Installing Dual Super BN Carbs

The only Super BN carbs that are factory prepare to be used as duals are the BN38-34-8075, 8076. Several other models have extended throttle shafts to make them easier to use as dual; one of the carbs will need to be modified slightly prior to use. The modification consists of removing the throttle lever, idle stop, spring and sleeve, and then cutting the threaded shaft end to the desired length. After removing the above mentioned parts, place both carbs on the manifold and cut enough of the threaded end of the shaft to allow one eighth inc (0.1257) clearance between the shaft ends: Be sure to chamfer the sharp edge.

A Mikuni coupling kit, MK-BN/001, is recommended to connect the two carbs together and synchronize them.

Note: The sleeve that was removed from the carb is actually a thrust spacer and must be used with the coupler. The sleeve should be shortened to the correct length and placed between the end of the coupler and the seal boss (see illustration) to prevent the shaft from moving side to side; this movement can cause damage to the throttle valve.

G: SYNCHRONIZING DUAL CARBS

1) Place the coupling on the throttle shaft between the carbs and secure the carbs to the manifold.
2) Back out the idle stop screw until it no longer contacts the throttle linkage.
3) Position the coupling between the carbs, against the shortened sleeve, and securely tighten the set screws on one end only.
4) Use the eraser end of a pencil or similar blunt object to push and hold the throttle valve closed in the carb without a return spring. With the throttle valve held closed, tighten the remaining screws.
5) Adjust the idle stop screw fir the desire idle speed.

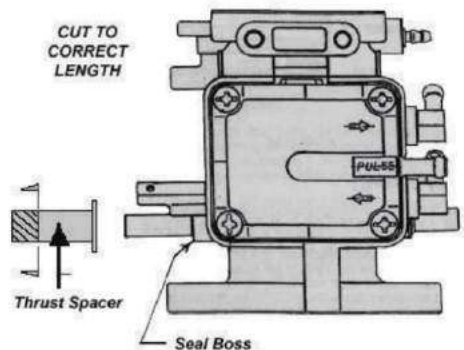

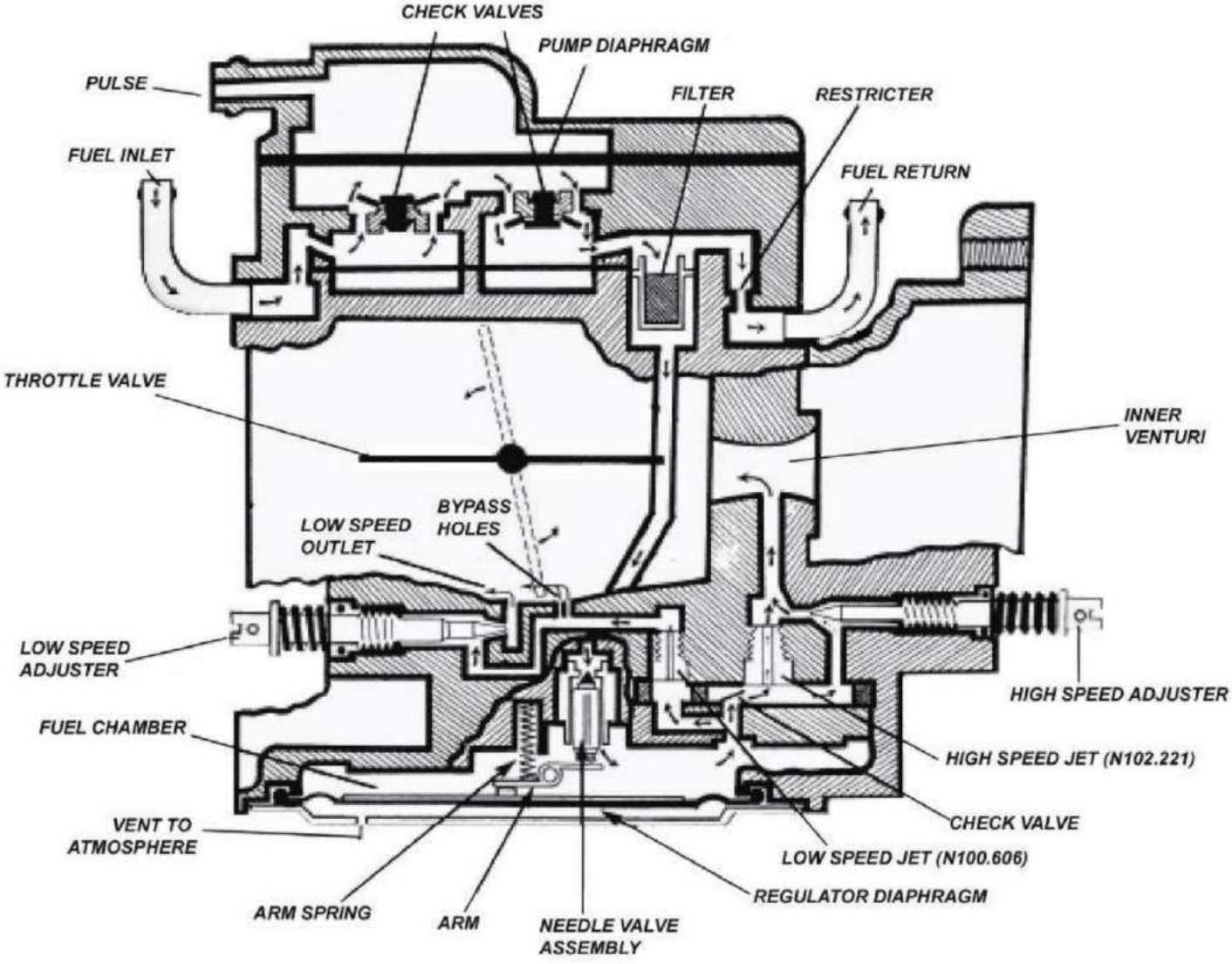

Cutaway Drawing

Use the cutaway drawing (above) to learn about the inner workings of the Super BN carburetor. Starting with the fuel pump, fuel enters through the fuel inlet, being drawn in by the engine's pulse acting on the pump diaphragm. The fuel passes through a series of check valves and then the fuel required by the engine passes through a fuel filter. Excess fuel is diverted through a restricter and then back to the fuel tank via the fuel return. The purpose of the fuel restricter is to act as a fuel pressure regulator for the fuel pump.

After the fuel passes through the filter it goes directly to the needle valve assembly and then into the chamber. Fuel flow into the fuel chamber is controlled by the regulator diaphragm, arm spring, arm and vent to the atmosphere. These components, along with the needle valve, make u to the regulator portion of the Super BN. As you will learn, the Super BN is part carburetor and part fuel regulator. The regulator portion controls fuel flow at lower speeds, idle to 1/4 throttle, and the carburetor portion controls fuel flow from about 1/4 throttle to full throttle.

At idle, fuel is drawn through the low speed jet to the low speed jet to the speed outlet, via the low speed adjuster, and to the bypass holes. The low speed adjuster controls fuel flow for a smooth idle and initial throttle response. As the throttle valve is opened from the idle position, the bypass holes are increasingly exposed to the air flow. Their function is to help the carburetor "transition" from low speed to high speed operation. The size of the low speed jet directly affects fuel flow through the bypass holes for low speed performance. the other function affecting low speed performance is the regulator portion of the BN. the regulator portion can be tuned by changing the arm spring tension of the size of the needle valve, or both. More of that later.

As the Super BN transition to its high speed fuel circuit, at about 3/8 throttle, fuel is drawn through the check valve is to prevent the low speed circuit from sucking in air through the high speed jet passes through the inner venturi then into the enfine. The high speed adjuster controls the maximum amount of fuel flow for full throttle performance from about 3/4 throttle opening.

MIKUNI Super BN External Components

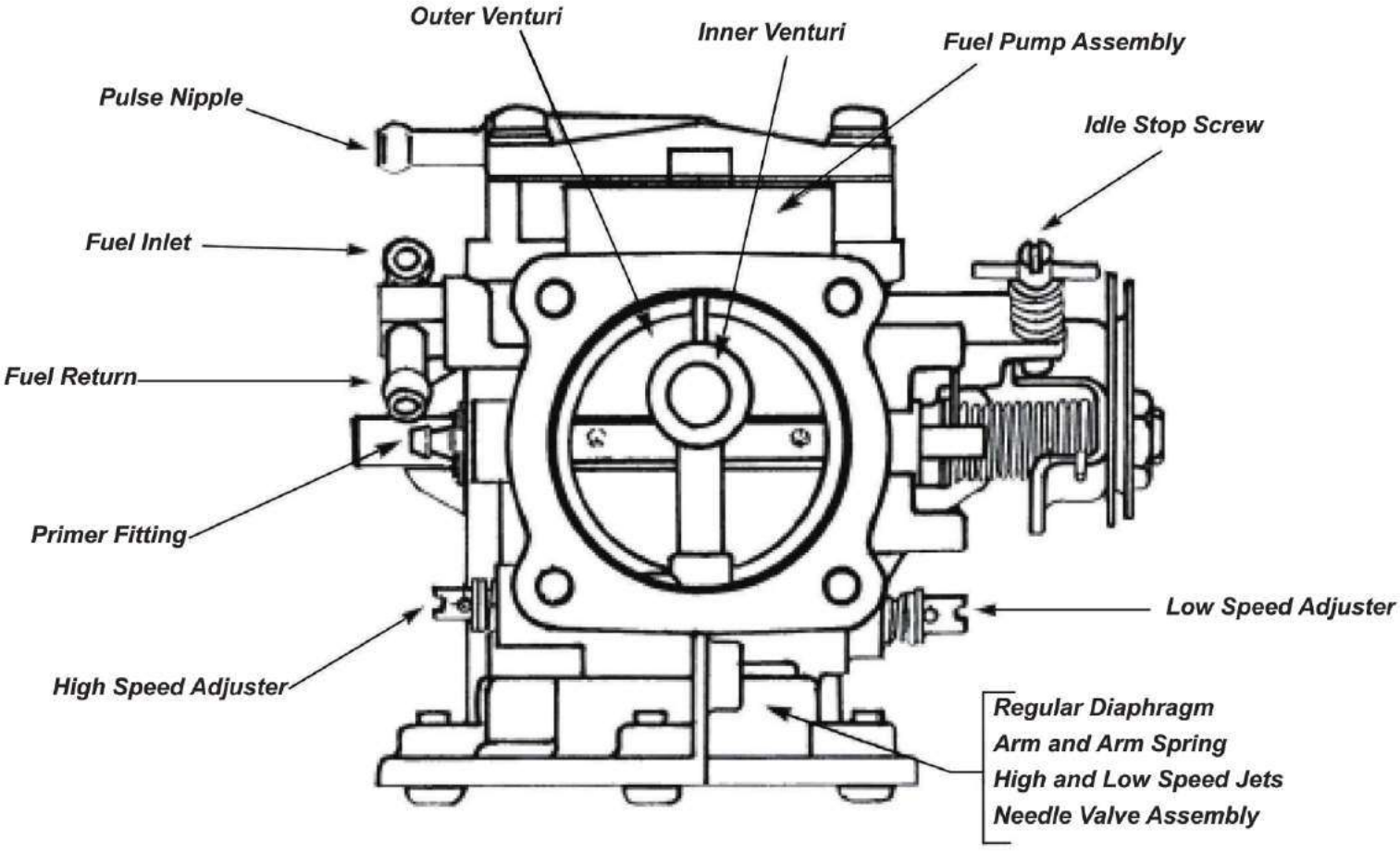

Principles of Carburetion

For Regulator Portion

Because the Super BN is a watercraft carburetor, it cannot vent its fuel chamber to the atmosphere like a carb with a float system; this would cause fuel leakage into the hull in the case of a roll over. The Super BN's fuel chamber is contained by the regulator diaphragm, with fuel on one side and atmospheric pressure on the other.

As the fuel in the chamber is drawn in by engine suction, the diaphragm moves in response to the depletion of fuel and the effect of atmospheric pressure pushing against it. The diaphragm contacts and moves the needle valve arm allowing fresh fuel to enter the fuel chamber. As fuel enters the fuel chamber it is being pushed in under pressure from atmospheric pressure. When the fuel chamber is once again filled, the diaphragm relieves the pressure in the arm and the needle valve closes. In this way, the diaphragm mechanism precisely regulates the amount of fuel in the fuel chamber.

Once again, the regulator portion of the Super BN primarily affects tuning at throttle openings of 1/4 or less in response to the engines high manifold pressure. The regulator portion of the BN engine configuration. The terms most commonly used in this adjustment is "Pop-Off" pressure.

Pop-off is a relative term,, it refers to the pressurization of the needle valve with compressed air, through the fuel inlet, and nothing the pressure necessary to open the needle valve or "pop" it off its seat. The higher the pressure that is required indicates a higher pop-off.

For Regulator Portion

The Super BN starts performing like a conventional carbs as the throttle is opened through and past 1/4 in that is uses replaceable jets and adjuster screws to make changes in calibration. At or beyond 1/4 throttle opening, the engine replaces manifold pressure with air velocity.

What is the difference between manifold pressure and air velocity? Manifold pressure is the suction generated by the engine against a very restrictive mechanism within the carb: The closed or nearly closed throttle plate. As the throttle is opened, the carb transition from being controlled by the regulator portion to responding as a normal carb does.

High air velocity, created by the engine as it revs up, appears as a strong suction (or low pressure) within the carb body. Fuel flow through the carb is caused by the differential in pressure between the positive atmospheric pressure on the diaphragm and the suction within the carb body. Because air velocity creates such a strong suction, pop-off pressure has virtually no affect on calibration past about 1/4 throttle.

Accurately tuning a Super BN, for any application, requires a basic understanding of its function and adhering to a few basic rules. Most importantly, you can only expect the carb to work as well as your engine does; the performance of your Super BN cannot make up for a weak or worn out engine.

Another point to stress here is that you may no be able to achieve maximum performance from your watercraft simply by changing jets in your Super BN. A mismatch of engines components and or pointing may create a carburetion nightmare. The best advise is to use quality parts and service from reputable dealers.

To achieve an accurate calibration with a Super BN you should adjust the tune able circuit in the following order:
1. LOW SPEED ADJUSTER - To adjust a smooth idle
2. POP-OFF PRESSURE - Just off idle to 1/4 throttle in conjunction with the low speed jet.
3. LOW SPEED JET - Just off idle to 1/3 throttle
4. HIGH SPEED JET - 1/3 to 3/4 throttle.
5. HIGH SPEED ADJUSTER - 3/4 to wide open throttle

The reason for adjusting the circuits in this order is because several circuits contribute to the total fuel delivery of the carb. Changing the low speed jet for example, affect wide open throttle fuel delivery to some degree, ref. Fuel Flow Chart.

The exceptions to the rule are the low speed adjuster and the regulator portion: The low speed adjuster has no effect past 1/3 throttle. The regulator portion has no tuning effect past 1/4 throttle, although it continues to control the fuel supply.

Idle Stop Screw

The idle stop screw is used to adjust the idle speed (rpm) by opening or closing the throttle valve. As a rule of thumb, adjust the idle speed to approximately 1100 rpm.

Low Speed Adjuster

The low speed adjuster us used in conjunction with the idle strop screw to adjust and maintain idle speed and smoothness. Experiment tuning the low speed adjuster in and out in small increments until a smooth idle is obtained. As the idle stop screw is tuned in our out to raise or lower idle speed the low speed mixture is also affected.

For clarification, if the idle stop screw is turned out to lower idle speed, this action increases manifold pressure slightly and richen the low speed mixture so that a mixture adjustments should be required. The low speed adjuster is very sensitive and adjustments should be made in small increments only.

NOTE: Remember, the low speed adjuster is only for adjusting the idle mixture. If you use the adjuster to help get rid of a low speed hesitation, you will probably find that your engine will load up in no wake zones, or after extended idling.

Pop-off pressure and low speed jet How do you pop-off pressure and the low speed jet work together?

These two circuits overlap, although the low speed jet continues past 1/4 throttle where pop-off pressure has little to no effect. In general, if your pop-off pressure is slightly too high, you can compensate by increasing the size o f the low speed jet. The opposite is also true; if the low speed jet is slightly small, you can compensate with less pop-off pressure. Once you get to the point where you think each is adjusted correctly. It's best to try varying the two to make certain you have the best combination. For example: If you have pop-off pressure of 30 psi and a 67.5 low speed jet, you should also try a pop-off say 35psi, and a 70 low speedjet.

To verify that you have the correct combination there are two things to test:
1. Throttle response should be crisp, with no hesitation.
2. Ride the boat at a constant 1/4 throttle opening for about 1 minute and then quickly open the throttle fully, there should be no hesitation and the engine should not show signs of being loaded up. If it hesitates, it's lean; if it's loaded up, it's rich. The first test is to check pop-off pressure, the second test is for checking the correctness of the low speed jet size.

Take the time to ride the boat slowly and thoroughly test your jetting changes. After a jet change, it takes the engine a few minutes of use to completely respond to the change.

When does it become necessary to adjust pop-off?

When personal watercraft come from the factory they have fairly high-pop due to the fact that they also have somewhat restrictive air intake systems that cause the engine to generate very high manifold pressures; the higher the manifold pressures, the higher the pop-off pressure required to properly regulate the fuel delivery to the engine.

As you modify or change your watercraft's flame arrestor to a less restrictive type you will most likely start to experience a lean hesitation caused by a decreased in manifold pressure. This change will require an adjustment in pop-off pressure to regain crisp throttle response. Because most after market flame arrestors are less restrictive than stock, you will need to decrease pop-off to compensate.

The Super BN carbs that come from Mikuni American are already set up for performance applications, and come with pop-off settings lower than the carbs that come as original equipment.

Pop-off pressure, (the regulator portion of the Super BN) is a tune able components of the Super BN and works in conjunction with the low speed jet for good initial throttle response. The components that make up the regulator portion of the Super BN are:

1. Needle Valve, available in 4 sizes, 1.5, 2.0, 2.3, and 2.5
2. Arm Spring, available in 4 sizes, 115 gr., 95gr., 80 gr., and 65 gr.
3. Arm
4. Regulator Diaphragm

The arm has limited range of adjustment; from the arm being level wit the adjacent carb surface to being bent upwards no more than .040" (1 mm) above that surface. If the arm is bent upwards too much, it can cause the needle valve to be held open when the diaphragm and cover are installed. If the arm is bent down, its movement becomes limited and may not be enough to allow the needle valve to open fully.

Adjusting pop-off pressure

Pop-off pressure is adjustable by replacing the arm spring with one of a different gram rating. Sometimes, in order to achieve the desired pop-off pressure, it is also necessary to change the needle valve size; keep in mind that it's always best to use the smallest needle valve size to obtained the correct pop-off pressure.

Measuring pop-off pressure

You can measure pop-off pressure with a "Pop-off" pump, available from Mikuni through your dealer, or you can get a relatively good indicator of pop-off pressure by simply using the needle valve and arm spring guide in this manual. Pop-off pumps are available in three ranges: 0-30psi., 0-60psi., and 0-100psi. For most performance applications the 0-30psi pump is appropriate. Pop-off pressures, in psi., from needle valve size and arm spring combinations:

	Pop-Off Arm Spring (color & strength)			
	Gold	Dull Silver	Black	Shiny Silver
Needle Valve Size	115 grams	95 grams	80 grams	65 grams
1.5	55 psi.	43 psi.	38 psi.	32 psi.
2.0	32 psi.	25 psi.	21 psi.	18 psi.
2.3	22 psi.	20 psi.	17 psi.	15 psi.
2.5	19 psi.	17 psi.	14 psi.	12 psi.

Checking pop-off with a pop-off pump/ gauge

1) Attach the pump to the fuel inlet nipple.
2) Cover, or in some way plug the fuel return nipple.
3) Remove the regulator diaphragm to observe the needle valve.
4) During testing, it is important to obtain consistent readings. To accomplish this, it is necessary to keep the needle valve wet. Use WD-40 or something similar to wet the needle valve. Note: Don't use gasoline because of the tire hazard. Protect your eyes from the spray when the needle pops open.
5) Pressurize the carb with the pump until the needle valve pops open, being careful to note the indicated pressure. Test the valve 3 times to assure an accurate reading.

An indication that your pop-off needs to be adjusted is a lean hesitation when you open the throttle from idle; in the extreme, the engine may even die. It is much easier to detect a lean pop-off than it is a rich one, so it si wise to adjust your pop-off until you get it too lean and then back up until the lean hesitation disappears.

NOTE: It is recommended that you do not use too large a needle valve for your application. Many tuners recommend using a 2.3 or 2.5 needle valve in all cases. Actually, we recommend using the smallest needle valve that gives you the correct pop-off pressure for your engine. A 1.5 needle valve can flow the maximum amount of fuel that the Super BN can pump, so the only reason to use a large needle valve is to obtain the correct needle valve and arm spring combination (pop-off) for your watercraft.

High Speed Jet / Throttle Position and Jetting

The high speed jet begins contributing fuel at about 3/8 throttle, overlapping the low speed jet. The high speed jet is the primary tunning component from 1/2 to 3/4 throttle. As you have probably noticed, tuning circuit operations are denoted in fractions of throttle openings. The reason for this is simple: Carb jetting does not relate to engine rpm or the boat's speed, it only recognizes how far the throttle has need opened; each circuit of the carb responds in turn. This is why it's very important, when trying to diagnose a carb problem, that you identify at which throttle opening the problem occurs, in order to adjust the appropriate circuit.

The procedures for testing for the correct high speed jet size is the same as for the low speed, except that you should now hold the throttle fully to check engine response. If the engine hesitates, the carb is lean. If the engine takes a second or two to clear out and then accelerate, the carb is too rich. In either case, make the l appropriate jet change and do the complete test again.

High Speed Adjuster

The high speed adjuster is the last circuit to adjust. It primarily controls fuel delivery from 3/4 throttle to wide open throttle. Turning the screw clockwise reduces fuel flow, counter clockwise increases fuel flow.

The maximum fuel flow is achieved at three turns out from closed.

To test the high speed adjuster it is recommended that you start with a fresh set of spark plugs, to get quicker plug readings, Unless you have an exhaust gas temperature gauge, you will have to rely on plug readings.

You will need to be in an area where you can hold the throttle wide open for several minutes then chop the throttle and stop the engine just prior to removing the plugs to read the,. Ideally, you're looking for a nice brown color on the electrode.

Another indicator of proper adjustment is a maximum rpm reading on a tachometer. If the carb is lean or rich, it won't pull as high an rpm reading as when it's right on.

Fuel Flow Chart

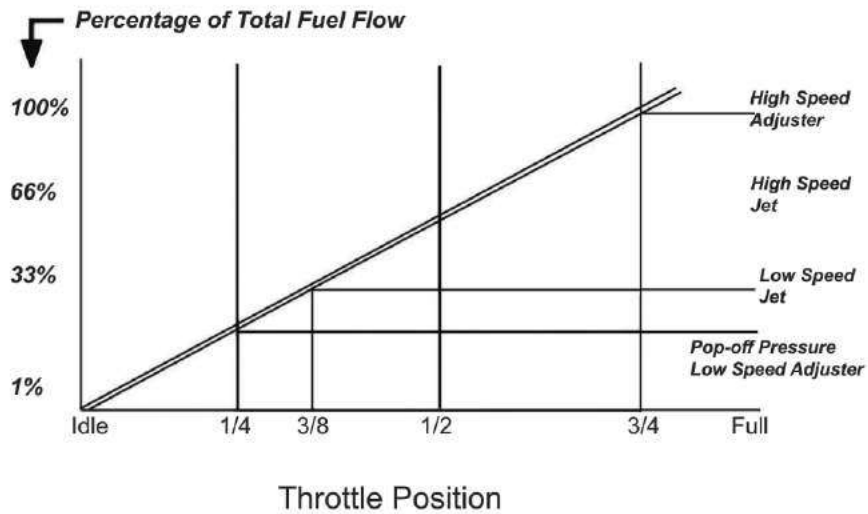

Carb	Low Speed Jet	High Speed Jet	Needle Valve	Arm Spring (grams)	Low Speed Adjuster	High Speed Adjuster	Choke or Primer	Color
BN45-42-8002#	120	150	2.5	80gr.	1.0	1.5	Primer	Silver
BN44-40-8067#	120	140	2.5	00gr .	1.0	1.5	Primer	Silver
BN44-40-8052#	100	125	2.3	65gr.	1.0	1.5	Primer	Black
BN44-40-43	120	115	1.5	115gr.	1.0	.75	Choke	Black
BN38-34-8113#	55	107.5	2.0	115gr.	1.0	1.5	Primer	Silver
BN38-34-55-D	65	107.5	2.0	115gr.	1.0	1.5	Choke	Black
BN38-34-8075*	65	107.5	2.0	115gr.	1.0	1.5	Primer	Black
BN38-34-8076*	65	107.5	2.0	115gr.	1.0	1.5	Primer	Black
BN34-28-8010	77.5	80	1.5	165gr.	1.25	.75	Choke	Black

# Denotes carbs that have extended throttle shafts and can be coupled together as duals.

* Denotes carbs that are designed to be used as a set and can only be used as duals.

Performance Tips - The "Left Turn Syndrome"

You will find all instances that your watercraft will turn more easily to the right than to the left. The reasons are basically simple, First, engine torque constantly places pressure on the hull to turn right.

If your engine's performance is marginal, you can notice a dramatic fall-off in power in a hard turn. This power fall-off can't always be blamed on the engine. Being over-propped can also cause the engine to slow enough to fall off its power peak. An engine with a peaky power curve is especially susceptible to a very dramatic power loss in a hard left turn.

Most recently, with the increase of Sport about racing, there has been a marked improvement in hull design with a dramatic increase in "G" forces encountered while turning: over 2.5 G's. In some instances, such a hard turn can cause a momentary loss of power due to fuel starvation in the carbs. Jetting changes cannot correct this situation, the best solution is to rotate the mounting of the carbs 90˚, so that their throttle shafts are perpendicular to the crankshaft axis rather than parallel. To date, this solution to the problem has been 100% successful.

Fuel Dripping from the Inner Venturi at Idle

This solution occurs periodically and is easy to cure. What causes this problem is a combination of two things. First, low po-off pressure (due to installation of a 2.5 needle valve with a light spring pressure) together with an engine that has a substantial vibration at idle.

The engine vibration causes the needle valve to leak, which causes the engine to run even rougher. You can view this occurrence by carefully looking into the throat of the carb at idle, you will be able to see the fuel dripping from the inner venturi. In this same way you can also check to see that the problem is corrected. The cure for the problem is to increase pop-off pressure until the dripping stops.

Engine hesitation when accelerating after a high speed deceleration

You may find it desirable to increase the number of anti-siphon valves (part no. BN34/107), If you ride very fast and find that you have a noticeable stumble when re-opening the throttle after a long, high speed deceleration. This is caused by excess fuel in the carb.

The engine revs fairly high while decelerating, but it uses very little fuel. The fuel pump still pulses hard, but there is no demand for the fuel. A small amount of fuel will overfill the fuel chamber, leak through the high speed circuit and get deposited on top of the closed throttle valve. This fuel causes a momentary rich condition when the throttle is re-opened.

The solution is to use one or two additional anti-siphon valves. Never use more than two extra, and recheck your calibration after installing any extra valves; in some cases extra valves can adversely affect throttle response.

MIKUNI Super BN Troubleshooting Guide

Problem	Possible Causes	Correction
Hard Starting	Incorrect use of primer	Review primer operation
	Fuel lines improperly connected	Reconnect in correct sequence
	Intake air leak	Check manifold connections
	Ignition problem	*Repair or replace as necessary
	Low cylinder compression	*Repair or replace as necessary
	Idle speed set too low	Adjust idle speed according to specifications in owners manual
	Clogged idle circuit	Remove carb and chemically clean
	Improper adjustment of low speed adjuster	Adjust low speed adjuster for a smooth idle
Slow return to idle	Idle speed set too high	Adjust idle speed according to specification in owners manual
	Throttle linkage sticking	Clean and inspect linkage, lubricate, repair or replace as necessary
	Throttle cable sticking	Correct routing or replace as necessary
Engine idles but won't rev up	Pop-off pressure too high or low speed jet too small	Adjust pop-off or low speed jet per manual
Engine "loads up" during extended idling, i.e., in 5 mph zone	Leaking anti-siphon valve	Replace Valve
	Leaking needle valve	Clean or replace needle valve
	pop-off pressure to low	Increase pop-off pressure - See "Low Speed Adjuster" section on Super BN tuning page
	Low speed jet too large	Replace low speed jet with smaller size jet
Engine surges when cruising at constant throttle setting	Incorrect air/fuel mixture	Mid range - change low speed jet High speed - readjust high speed adjuster
Engine does not develop full power or misses during acceleration	Clogged air cleaner/flame arrestor	Clean as necessary
	Throttle not synchronized (Dual carb applications)	Re-synchronize carbs
	Clogged fuel filter or water separator	*Clean as necessary
	Components loose in carb, i.e., jets	Tighten as necessary
	Ignition problem	*Repair or replace as necessary
	Low cylinder compression	*Repair or replace as necessary
Carburetor is too lean at full throttle and turning out high speed adjuster has no effect	Needle valve size is too small for engine needs	Replace jet with larger size
	High speed jet too small	Replace jet with larger size
	Carburetor too large for engine	Use more restrictive flame arrestor for smaller carb
***Refer to Shop Manual for your craft**		

NGK Spark Plug Decoder

* Standard regulation is drawn here. There also exists a few extraordinary symbols.

	Thread Size	Hexagon Size
A	18 mm	25.4 mm
B	14 mm	20.8 mm
C	10 mm	16.0 mm
D	12 mm	18.0 mm
E	8 mm	13.0 mm
G	PF 1/2	23.8 mm
J	12 mm	18.0 mm
AB	18 mm	20.8 mm
BC	14 mm	16.0 mm
BK	14 mm	16.0 mm
	(Iso type of BCP)	
DC	12 mm	16.0 mm

Construction Feature	
L	Compact type (Shorty)
M	Compact type (Bantam)
P	Projected insulator type
R	Resistor Type
U	Surface or semi surface discharge type
Z	Inductive resistor type

Heat Rating Number	
2	Hotter
4	
5	
6	
7	
8	
(85)	
9	
(95)	
10	
(105)	
11	
12	
13	Colder

Thread Reach	
E	19.0 mm
H	12.7 mm
L	11.2 mm
EH	Half thread Total: 19.0 mm Thread: 12.7 mm
F	Conical seat type A-F type 10.9 mm B-F type 11.2 mm B-EF type 17.5 mm

BC P R 6 E S - 11

Spark gap (mm)
None: Standard gap

Firing End Construction, etc.	
C	Low angle ground electrode
F	Conical seat
G	Fine nickel alloy center electrode
GV	Gold-pelladium center electrode and special construction
J	Extended 2-Ground electrodes
K	2-Ground electrodes
M	2-Ground electrodes for Mazda rotary eng. or Insulator length: 18.5 mm
T	3-Ground electrodes
Q	4-Ground electrodes
P	Platinum electrode
S	Copper core center electrode
U	Semisurface discharge type
V	Gold-palladium center electrode
VX	platinum center electrode & special ground electrode
W	Thungsten electrode
X	Booster gap
Y	V-Grooved center electrode
A, B, D, E, Z	Special design
-L	Half heat range
-LM	Compact type (insulator length: 14.5 mm)
-N	Special ground electrode
IX	Iridium

Spark gap (mm)
None: Standard gap

P F R 6 A - 11 A

Plug type	
I	Iridium electrode
P	Platinum electrodes
L	Thread reach 26.5 mm
Z	Extended gap
PL	Platinum electrodes and Thread reach 26.5 mm
PZ	Platinum electrodes and extended gap
IZ	Iridium electrodes and extended gap

Construction	
R	Resistor

Feature	
A	No gasket type
B	Special
C	Special
D	Special

Construction	
A	Special design
B	Special design
C	Special design
D	Special design

Metal Shell Size	
F	14 ø 19 mm , 16.0 mm Hex
G	14 ø 19 mm , 20.8 mm Hex
J	12 ø 19 mm , 18.0 mm Hex
K	12 ø 19 mm , 16.0 mm Hex
M	10 ø 19 mm , 16.0 mm Hex
T	Conical seat type 14 ø 17.5 mm , 16.0 mm Hex (PTR5A: 14 ø 25 mm , 16.0 mm Hex)

How to read a spark plug?

By examining the insulator firing nose color, an experienced engine tuner can determine a great deal about the engine's overall operating condition.

In general, a light tan/gray color tells you that the spark plug is operating at optimum temperature and that the engine is in good condition. Dark coloring, such as heavy black wet or dry deposits, can indicate an overly rich condition, to cold a heat range spark plug, a possible vacuum leak, low compression, overly retarded timing or to large a plug gap.

If the deposits are wet, it can be an indication of a breached head gasket, poor oil control from ring or valve train problems or an extremely rich condition—depending on the nature of the liquid present at the firing tip.

Signs of fouling or excessive heat must be traced quickly to prevent further deterioration of performance and possible engine damage.

Normal Condition

An engine's condition can be judged by the appearance of the spark plug's firing end. If the firing end of a spark plug is brown or light gray, the condition can be judged to be good and the spark plug is functioning optimally.

Overheating

When a spark plug overheats, deposits that have accumulated on the insulator tip melt and give the insulator tip a glazed or glossy appearance.

Dry and Wet Fouling

Although there are many different cases, if the insulation resistance between the center electrode and the shell is over 10 ohms, the engine can be started normally. If the insulation resistance drops to 0 ohms, the firing end is fouled by either wet or dry carbon.

Deposits

The accumulation of deposits on the firing end is influenced by oil leakage, fuel quality and the engine's operating duration.

Lead Fouling

Lead fouling usually appears as yellowish brown deposits on the insulator nose. This cannot be detected by a resistance tester at room temperature. Lead compounds combine at different temperatures. Those formed at 370-470°C (700-790°F) have the greatest influence on lead resistance.

Abnormal Erosion

Abnormal electrode erosion is caused by the effects of corrosion, oxidation and reaction with lead—all resulting in abnormal gap growth.

Normal Life

A worn spark plug not only wastes fuel but also strains the whole ignition system because the expanded gap (due to erosion) requires higher voltages.

Erosion, Corrosion and Oxidation

The material of the electrodes has oxidized, and when the oxidation is heavy, it will be green on the surface. The surface of the electrodes is also fretted and rough.

Melting

Melting is caused by overheating. Mostly, the electrode surface is rather lustrous and uneven. The melting point of nickel alloy is 1,200~1,300°C (2,200~2,400°F).

Breakage

Breakage is usually caused by thermal expansion and thermal shock due to sudden heating or cooling.

Lead Erosion

Lead erosion is caused by lead compounds in the gasoline which react chemically with the material of the electrodes (nickel alloy) as high temperatures; crystal of nickel alloy fall off because of the lead compounds permeating and separating the grain boundary of the nickel alloy. Typical lead erosion causes the surface of the ground electrode to become thinner, and the tip of the electrode looks as if it has been chipped.

HOW TO READ YOUR SUNSTAR APPLICATION CHART

1. Find your model in the catalog by referring to the MAKE, MODEL, CC and YEARS columns in the chart.

2. Refer to the OEM Gearing Info columns to find the stock size sprockets and stock gear ratio.

3. To complete the Sunstar part number, take the application code of the desired product type and add the desired number of teeth (example: appl code 2-3559 in 51 tooth would be 2-355951)

4. For aluminum sprockets where color options are available, it will be indicated by an * in the aluminum sprocket column. Just add the appropriate color code after the tooth size to complete the part number
   BK= Black Anodized BL= Blue Anodized OR= Orange Anodized
   Example Black Ano Full Part # 5-355948BK

.

OEM SPECIFICATIONS

All OEM specs listed are extracted from the manufacturer's published records and listed for your information and convenience only. Sunstar does not accept responsibility for the accuracy contained in those records and presented in this catalog

NEW APPLICATIONS

Applications constantly are being added and/or updated.

PROPER CLEARANCE

Anytime you use a different sprocket size (# teeth) or pitch, please check for proper clearance & alignment during installation. Sunstar doesn't guarantee fitments of every sprocket size option listed for every single application in this catalog.

HOW TO READ A PART NUMBER

Sunstar Power Drive Counter shaft Sprockets:

Sunstar Part Number: 1 01 15

Chain Size

1: 420 Chain

2: 428 Chain

3: 520 Chain

4: 525 Chain

5: 530 Chain

6: 630 Chain

Mounting Code

Number of Teeth

Sunstar Rear Sprockets:

Sunstar Part Number: 2 - 1 605 45

Material Code

2: Standard Steel

5: Aluminum

8: Works Z Stainless Steel

Chain Size

1: 420 Chain

2: 428 Chain

3: 520 Chain

4: 525 Chain

5: 530 Chain

6: 630 Chain

Application Code

Number of Teeth

SUNSTAR

CHAINS

CHAINS

Chain Model	Description	Length Options	Ring Type	Color Option	Link Type	Max CC Street / Off Road	Tensile Strength (lbs)	Weight / 100L (lbs)	Pin Length (mm)	Inner Plate Thick-ness	Outer Plate Thick-ness	Recommended Application Examples
520HDN	520 Heavy Duty Non-sealed Motorcycle Chain	114 & 120	None	NonGold	Clip	NA / 250	7,900	3.15	18.15	2.00	2.00	CRF150F, KDX200, RM125, TTR230
520SSR	520 Standard Sealed Ring Motorcycle Chain	100 & 120	O-ring	NonGold	Clip (press fit)	400 / 400	7,700	3.35	19.90	2.00	2.00	WR250F, KLX300R, XR400R
520XTG	520 Works Xtreme TripleGuard Sealed Ring Motorcycle & ATV Chain	100 & 120	TG	Gold *	Clip (press fit)	400 / 750	8,500	3.77	20.80	2.00	2.00	CRF450X, TRX450R, YZ450F, KLX450R
520MXR1	520 Works Motocross / Supercross Non-sealed Motorcycle Chain	116 & 120	None	Gold **	Clip	NA / 500	9,000	2.99	17.70	1.80	2.00	CRF250R, RM-Z450, KX450F, 125SX, YZ250F
520RDG	520 Road DualGuard Sealed Ring Motorcycle Chain	114 & 120	DG	NonGold	Rivet	750 / 750	8,500	3.36	19.90	2.00	2.00	CBR600RR, KLR650, XV250
525RDG	525 Road DualGuard Sealed Ring Motorcycle Chain	112 & 120	DG	NonGold	Rivet	900 / 750	8,850	4.30	22.85	2.40	2.30	VT750, ZZR600, DL650, YZF-R6
530RDG	530 Road DualGuard Sealed Ring Motorcycle Chain	110 & 120	DG	NonGold	Rivet	1000 / 750	9,500	4.48	24.90	2.40	2.30	CBR600F2, KZ650, GSF600S, FZ-6
520RTG1	520 Works Road TripleGuard Sealed Ring Motorcycle Chain	116 & 120	TG	Gold **	Rivet	1000 / 750	8,800	3.75	20.80	2.20	2.20	CBR600RR, ZX-6R, GSX-R750, YZF-R6
525RTG1	525 Works Road TripleGuard Sealed Ring Motorcycle Chain	120	TG	Gold **	Rivet	1100 / 800	9,300	4.30	22.85	2.40	2.30	DL650 Vstrom, GSX-R750, ZX-9R, ZX-10R
530RTG1	530 Works Road TripleGuard Sealed Ring Motorcycle Chain	116 & 120	TG	Gold **	Rivet	1400 / 900	10,000	4.63	24.90	2.40	2.40	ZX-14R, GSX1300-R, YZF-R1
420MXR	420 Works Motocross / Supercross Non-sealed Motorcycle Chain	126	None	Gold **	Clip	150 / 150	5,000	1.76	15.70	1.80	1.45	CRF80F, KX80/85, DR-Z110, PW80
428MXR	428 Works Motocross / Supercross Non-sealed Motorcycle Chain	134	None	Gold **	Clip	250 / 150	5,800	2.13	17.60	1.80	1.80	CRF100F, KLX140/L, RM85, YZ85

* indicates gold outer, non-gold inner plates

** indicates gold outer & inner plates

Recommended applications not full list but just a small sample of suggested model types per chain

Sealed Ring Types:

SSR = Standard Sealed Ring (Normal O-Ring)

DG = DualGuard (2 sealing lips & lubrication pools per side)

TG = TripleGuard (3 sealing lips & lubrication pools per side)

Sunstar Manufacturer Recommendations

* All chains should be installed by a certified mechanic, using the proper installation tools. Chain adjustment should be done per the bike maker's owner's manual instruction.

* Always check sprocket alignment when installing new drive components & during routine maintenance & adjustment; mis-aligned sprockets are detrimental to the life of the drive system.

* It is always recommended to replace your chain with the same size (pitch) and type of chain (sealed or non-sealed) that originally came on the motorcycle from the factory.

* Avoid using volatile solvents such as gasoline, thinners and/or benzine; it is best to consult with your local dealer before using any cleaners and/or lubricants.

* For best results and the longest life possible replace all drive components (sprockets & chains) at the same time (preferably using both Sunstar chain & sprockets).

SUNSTAR

BETA/GAS GAS/HONDA

For the complete Sunstar part numbers:

Combine the Appl code for your desired product with the number of teeth.

EXAMPLE:	APPL CODE	TEETH #	2-355943

BETA

MODEL	OE GEARING INFO						REAR						FRONT		
BETA	CC	Years	Rear	CS	Ratio	Chain Links	Steel Appl Code	# Teeth	Alum Appl Code	# Teeth	Works Z Appl Code	# Teeth	CS Appl Code	# Teeth	Comments / Notes
RR250	250	2005-09	52	14	3.71	520-	2-3631	42-43,45,47-52					357	12-15	
RR250 2T	250	2013	49	13	3.77	520-							357	12-15	
RR350	350	2012	50	13	3.85	520-114	2-3631	42-43,45,47-52					357	12-15	
RR350	350	2013-14	50	13	3.85	520-							357	12-15	
RR350 2T	350	2013	49	13	3.77	520-							357	12-15	
RR400	400	2005-09	50	14	3.57	520-114	2-3631	42-43,45,47-52					357	12-15	
RR400	400	2010-12	50	13	3.85	520-114	2-3631	42-43,45,47-52					357	12-15	
RR400	400	2013-14	50	13	3.85	520-							357	12-15	
RR450	450	2005-09	50	14	3.57	520-114	2-3631	42-43,45,47-52					357	12-15	
RR450	450	2010-12	48	13	3.69	520-112	2-3631	42-43,45,47-52					357	12-15	
RR450	450	2013-14	48	13	3.69	520-							357	12-15	
RR498	498	2012	48	13	3.69	520-112	2-3631	42-43,45,47-52					357	12-15	
RR498	498	2013-14	48	13	3.69	520-							357	12-15	
RR520	520	2010-11	48	13	3.69	520-112	2-3631	42-43,45,47-52					357	12-15	
RR525	525	2005-09	50	14	3.57	520-	2-3631	42-43,45,47-52					357	12-15	

GAS GAS

MODEL	OE GEARING INFO						REAR						FRONT		
GAS GAS	CC	Years	Rear	CS	Ratio	Chain Links	Steel Appl Code	# Teeth	Alum Appl Code	# Teeth	Works Z Appl Code	# Teeth	CS Appl Code	# Teeth	Comments / Notes
EC125	125	2003-11	48	13	3.69	520-112	2-3631	42-43,45,47-52							
Enduro 125	125	2000-02	52	13	4.00	520-118	2-3631	42-43,45,47-52							
EC200	200	2000-02	51	13	3.92	520-116	2-3631	42-43,45,47-52							
EC200 2t	200	2003-15	48	13	3.69	520-114	2-3631	42-43,45,47-52							
EC250	250	2000	47	13	3.62	520-114	2-3631	42-43,45,47-52							
EC250 2t	250	2001-15	48	13	3.69	520-112	2-3631	42-43,45,47-52							
EC250F	250	2012	50	13	3.85	520-	2-3631	42-43,45,47-52					388	12-14	
EC250F	250	2013-15	48	13	3.69	520-	2-3631	42-43,45,47-52					388	12-14	
EC300	300	2000	47	13	3.62	520-114	2-3631	42-43,45,47-52							
EC300 2t	300	2001-15	48	13	3.69	520-114	2-3631	42-43,45,47-52							
EC300F	300	2013-15	48	13	3.69	520-	2-3631	42-43,45,47-52					388	12-14	
EC400 FSE	400	2000	48	13	3.69	520-116	2-3631	42-43,45,47-52							
SM400 FSE	400	2003-04	42	13	3.23	520-112	2-3631	42-43,45,47-52							
EC450 FSE	450	2003-10	48	13	3.69	520-116	2-3631	42-43,45,47-52							
SM450 FSE	450	2003-05	42	13	3.23	520-112	2-3631	42-43,45,47-52							

HONDA

MODEL	OE GEARING INFO						REAR						FRONT		
HONDA	CC	Years	Rear	CS	Ratio	Chain Links	Steel Appl Code	# Teeth	Alum Appl Code	# Teeth	Works Z Appl Code	# Teeth	CS Appl Code	# Teeth	Comments / Notes
CRF50F	50	2004-15	37	14	2.64	420-78	2-1060	37	5-1060	35,39			107	14,15	
MB5	50	1982	43	13	3.31	420-106							103	13-15	
MR50	50	1974-75	43	12	3.58	420-92							106	12	
NS50F	50	1990	43	14	3.07	420-118							103	13-15	
NSR50R	50	2004	42	14	3.00	420-76							102	13-15	
XR50R	50	2000-03	37	14	2.64	420-76	2-1060	37	5-1060	35,39			107	14,15	
Z50A Mini Trail	50	1969-70	37	12	2.92	420-74	2-1003	37					106	12	
Z50A Mini Trail	50	1971-78	37	12	2.92	420-76	2-1003	37					106	12	
Z50R	50	1979-81	37	12	3.08	420-76	2-1003	37					106	12	
Z50R	50	1982-87	37	13	2.85	420-76	2-1003	37					102	13-15	
Z50R	50	1988-89	37	14	2.64	420-78	2-1008	37					102	13-15	
Z50R	50	1991-99	37	14	2.64	420-78	2-1008	37					102	13-15	

SUNSTAR

HONDA

For the complete Sunstar part numbers:

Combine the Appl code for your desired product with the number of teeth.

EXAMPLE:	APPL CODE	TEETH #	2-365943

HONDA

MODEL	OE GEARING INFO						REAR						FRONT		
HONDA	CC	Years	Rear	CS	Ratio	Chain Links	Steel Appl Code	# Teeth	Alum Appl Code	# Teeth	Works Z Appl Code	# Teeth	CS Appl Code	# Teeth	Comments / Notes
Z50RD	50	1986	37	13	2.85	420-76	2-1003	37					102	13-15	
ZB50	50	1988	37	15	2.47	420-100	2-1022	35-36,38,44,46					103	13-15	
CR60R	60	1983-84	45	14	3.21	420-104	2-1308	36,38,45,46,49					103	13-15	
ATC70	70	1973-74	35	14	2.50	420-72	2-1022	35-36,38,44,46					103	13-15	
ATC70	70	1978-81	35	14	2.50	420-72	2-1022	35-36,38,44,46					103	13-15	
ATC70	70	1982-85	36	13	2.77	420-72	2-1022	35-36,38,44,46					102	13-15	
C70 Passport	70	1970	36	14	2.57	420-96							102	13-15	
C70 Passport	70	1980-81	36	14	2.57	420-96							103	13-15	
C70 Passport	70	1982-83	36	14	2.57	420-96							102	13-15	
C70M	70	1970-73	39	14	2.79	420-98							103	13-15	
CL70	70	1969-70	47	13	3.62	420-102	2-1022	35-36,38,44,46					103	13-15	
CL70	70	1971-72	49	13	3.77	420-102	2-1022	35-36,38,44,46					103	13-15	
CRF70F	70	2004-11	36	15	2.40	420-86	2-1308	36,38,45,46,49					107	14,15	
CRF70F	70	2012	36	15	2.40	420-	2-1308	36,38,45,46,49					107	14,15	
CT70	70	1971	38	15	2.53	420-88	2-1022	35-36,38,44,46					103	13-15	
CT70	70	1972-82	35	15	2.33	420-86	2-1022	35-36,38,44,46					103	13-15	
CT70	70	1991-94	35	15	2.33	420-86	2-1022	35-36,38,44,46					103	13-15	
CT70H	70	1970	45	14	3.21	420-92	2-1022	35-36,38,44,46					103	13-15	
CT70H	70	1972	45	14	3.21	420-92	2-1022	35-36,38,44,46					103	13-15	
SL70	70	1971-72	44	13	3.38	420-96	2-1022	35-36,38,44,46					103	13-15	
TRX70 Fourtrax	70	1986-87	36	13	2.77	420-72	2-1022	35-36,38,44,46					102	13-15	
XL70	70	1974-76	44	13	3.38	420-96	2-1022	35-36,38,44,46					103	13-15	
XR70R	70	1997-99	36	15	2.40	420-86	2-1308	36,38,45,46,49					103	13-15	
XR70R	70	2000-03	36	15	2.40	420-86	2-1308	36,38,45,46,49					107	14,15	
XL75	75	1977-79	36	14	2.57	420-94	2-1022	35-36,38,44,46					103	13-15	
XR75	75	1973-76	44	14	3.14	420-100	2-1022	35-36,38,44,46					103	13-15	
XR75	75	1977-78	46	14	3.29	420-104	2-1022	35-36,38,44,46					103	13-15	
CR80R Elsinore	80	1980-81	47	14	3.36	420-108							103	13-15	
CR80R	80	1982-83	45	14	3.21	420-112	2-1308	36,38,45,46,49					103	13-15	
CR80R	80	1984	49	14	3.50	420-114	2-1308	36,38,45,46,49					103	13-15	
CR80R	80	1985	49	15	3.27	420-114	2-1456	47,49-51,55,56	5-1456	47-51,54-56			103	13-15	
CR80R	80	1986-95	49	15	3.27	420-114	2-1456	47,49-51,55,56	5-1456	47-51,54-56			107	14,15	
CR80R	80	1996-02	49	15	3.27	420-116	2-1456	47,49-51,55,56	5-1456	47-51,54-56			107	14,15	
CR80RB Expert	80	1996-02	55	15	3.67	420-126	2-1456	47,49-51,55,56	5-1456	47-51,54-56			107	14,15	
CRF80F	80	2004-13	46	14	3.29	420-110	2-1308	36,38,45,46,49					102	13-15	
XL80S	80	1980-85	37	15	2.47	420-96	2-1022	35-36,38,44,46					103	13-15	
XR80	80	1979-84	46	14	3.29	420-100	2-1022	35-36,38,44,46					102	13-15	
XR80R	80	1985-03	46	14	3.29	420-110	2-1308	36,38,45,46,49					102	13-15	
CR85R	85	2003-04	50	15	3.33	420-116	2-1456	47,49-51,55,56	5-1456	47-51,54-56			107	14,15	
CR85R	85	2005-07	49	15	3.27	420-116	2-1456	47,49-51,55,56	5-1456	47-51,54-56			107	14,15	
CR85RB Expert	85	2003-04	56	15	3.73	420-124	2-1456	47,49-51,55,56	5-1456	47-51,54-56			107	14,15	
CR85RB Expert	85	2005-07	55	15	3.67	420-124	2-1456	47,49-51,55,56	5-1456	47-51,54-56			107	14,15	
CL90	90	1969	45	14	3.21	428-100							207	13-15	
CM91	90	1968	40	14	2.86	428-100							207	13-15	
CT90 Trail 90	90	1969-72	45	15	3.00	428-104	2-2126	45							
CT90 Trail 90	90	1974-79	45	15	3.00	428-104	2-2126	45							
CT90 Trail 90	90	1968	45	15	3.00	428-100	2-2126	45							
EZ90 Cub	90	1991-92	35	14	2.50	428-100							207	13-15	
SL90	90	1969	46	14	3.29	428-102							207	13-15	
TRX90EX/X	90	1993-09	50	13	3.85	428-98	2-2462	48,50					223	13	
TRX90X	90	2013-15	50	13	3.85	428-100	2-2462	48,50					223	13	
CB100	100	1970-72	40	14	2.86	428-102							207	13-15	
CL100	100	1970-72	40	14	2.86	428-104							207	13-15	
CL100S	100	1971-73	40	14	2.86	428-104							207	13-15	
CRF100F	100	2004-13	50	14	3.57	428-118	2-2311	46,50					202	13-15	
SL100	100	1969-70	44	14	3.14	428-108							207	13-15	

SUNSTAR

HONDA

For the complete Sunstar part numbers:

Combine the Appl code for your desired product with the number of teeth.

EXAMPLE:	APPL CODE	TEETH #	2-355943

HONDA

MODEL	OE GEARING INFO						REAR						FRONT		
HONDA	CC	Years	Rear	CS	Ratio	Chain Links	Steel Appl Code	# Teeth	Alum Appl Code	# Teeth	Works Z Appl Code	# Teeth	CS Appl Code	# Teeth	Comments / Notes
SL100	100	1971-72	49	14	3.50	428-110							207	13-15	
XL100	100	1974-76	49	14	3.50	428-110							207	13-15	
XL100	100	1977-78	49	14	3.50	428-112	2-2064	35					207	13-15	
XL100S	100	1979-80	45	15	3.00	428-118	2-2064	35					202	13-15	
XL100S	100	1981-85	42	15	2.80	428-108	2-2025	42					202	13-15	
XR100	100	1981-84	50	14	3.57	428-112	2-2025	42					202	13-15	
XR100R	100	1985-03	50	14	3.57	428-118	2-2311	46,50					202	13-15	
CRF110F	110	2013-15	38	14	2.71	420-86	2-1308	36,38,45,46,49					102	13-15	
CT110 Trail 110	110	1980	45	15	3.00	428-104	2-2028	45					206	13-15	
CT110 Trail 110	110	1981-84	45	15	3.00	428-104	2-2028	45							
CT110 Trail 110	110	1986	45	15	3.00	428-104	2-2028	45							
CB125S	125	1973-75	40	15	2.67	428-102							207	13-15	
CB125S	125	1976	35	15	2.33	428-100							207	13-15	
CB125S	125	1978-82	35	15	2.33	428-100							207	13-15	
CB125S	125	1984	43	14	3.07	428-110	2-2064	35					207	13-15	
CB125TT	125	1990	43	14	3.07	428-122	2-2064	35					207	13-15	
CL125S	125	1973-74	43	15	2.87	428-103							207	13-15	
CRF125F	125	2014-16	46	13	3.54	428-112	2-2311	46,50					223	13	
CRF125FB	125	2015-16	49	13	3.77	428-118	2-2311	46,50					223	13	
CR125R Elsinore	125	1979-81	51	13	3.92	520-110							303	12,13	
CR125R	125	1982	51	13	3.92	520-112							303	12,13	
CR125R	125	1983-85	51	13	3.92	520-114	2-3559	39,43-45,47-53	5-3559	43-55*	8-3559	48E-52E			*indicates Blk Ano Avail in 48-53t
CR125R	125	1986	51	13	3.92	520-114	2-3559	39,43-45,47-53	5-3559	43-55*	8-3559	48E-52E			*indicates Blk Ano Avail in 48-53t
CR125R	125	1987-96	51	13	3.92	520-114	2-3559	39,43-45,47-53	5-3559	43-55*	8-3559	48E-52E	344	12-14	*indicates Blk Ano Avail in 48-53t
CR125R	125	1997	49	12	4.08	520-112	2-3559	39,43-45,47-53	5-3559	43-55*	8-3559	48E-52E	344	12-14	*indicates Blk Ano Avail in 48-53t
CR125R	125	1998-99	51	13	3.92	520-114	2-3559	39,43-45,47-53	5-3559	43-55*	8-3559	48E-52E	344	12-14	*indicates Blk Ano Avail in 48-53t
CR125R	125	2000-01	52	13	4.00	520-116	2-3559	39,43-45,47-53	5-3559	43-55*	8-3559	48E-52E	344	12-14	*indicates Blk Ano Avail in 48-53t
CR125R	125	2002	51	13	3.92	520-114	2-3559	39,43-45,47-53	5-3559	43-55*	8-3559	48E-52E	344	12-14	*indicates Blk Ano Avail in 48-53t
CR125R	125	2003	52	13	4.00	520-116	2-3559	39,43-45,47-53	5-3559	43-55*	8-3559	48E-52E	344	12-14	*indicates Blk Ano Avail in 48-53t
CR125R	125	2004	53	13	4.08	520-116	2-3559	39,43-45,47-53	5-3559	43-55*	8-3559	48E-52E	312	12-14	*indicates Blk Ano Avail in 48-53t
CR125R	125	2005-07	52	13	4.00	520-116	2-3559	39,43-45,47-53	5-3559	43-55*	8-3559	48E-52E	312	12-14	*indicates Blk Ano Avail in 48-53t
CT125	125	1977	52	14	3.71	428-102	2-2064	35					207	13-15	
Grom 125	125	2014	34	15	2.27	420-106							103	13-15	
NX125	125	1988	56	15	3.73	428-130							207	13-15	
NX125	125	1989-90	48	15	3.20	428-126							207	13-15	
SL125	125	1971-73	49	15	3.27	428-110							207	13-15	
TL125	125	1973-75	60	15	4.00	428-120							207	13-15	
TL125S	125	1976	60	15	4.00	428-120	2-2064	35					207	13-15	
TRX125	125	1987-88	48	12	4.00	428-94	2-2462	48,50							
XL125	125	1974-75	52	15	3.47	428-118							207	13-15	
XL125	125	1976-78	52	15	3.47	428-118	2-2064	35					207	13-15	
XL125S	125	1979-82	56	14	4.00	428-124	2-2064	35					207	13-15	
XL125S	125	1984	56	14	4.00	428-124	2-2064	35					207	13-15	
CRF150F	150	2003-05	48	13	3.69	520-112	2-3559	39,43-45,47-53	5-3559	43-55*	8-3559	48E-52E	348	12-14	*indicates Blk Ano Avail in 48-53t
CRF150F	150	2006-09	47	13	3.62	520-112	2-3559	39,43-45,47-53	5-3559	43-55*	8-3559	48E-52E	348	12-14	*indicates Blk Ano Avail in 48-53t
CRF150F	150	2012-16	47	13	3.62	520-120	2-3559	39,43-45,47-53	5-3559	43-55*	8-3559	48E-52E	348	12-14	*indicates Blk Ano Avail in 48-53t
CRF150R	150	2007-09	50	15	3.33	420-112	2-1456	47,49-51,55,56	5-1456	47-51,54-56			111	14,15	
CRF150R	150	2012-16	50	15	3.33	420-120	2-1456	47,49-51,55,56	5-1456	47-51,54-56			111	14,15	
CRF150RB Expert	150	2007-09	56	15	3.73	420-116	2-1456	47,49-51,55,56	5-1456	47-51,54-56			111	14,15	
CRF150RB Expert	150	2012-16	56	15	3.73	420-126	2-1456	47,49-51,55,56	5-1456	47-51,54-56			111	14,15	
ATC185	185	1980	47	11	4.27	520-90	2-3658	47					305	11,12	Use Stock Dampers w/ Rear Sprocket
ATC185S	185	1981-82	41	11	3.73	520-82	2-3417	41					305	11,12	Use Stock Dampers w/ Rear Sprocket
ATC185S	185	1983	41	11	3.73	520-82							305	11,12	
CM185T Twinstar	185	1978-79	35	15	2.33	428-112	2-2064	35					207	13-15	
XL185S	185	1979-83	50	14	3.57	428-120	2-2064	35					207	13-15	
XR185	185	1979	58	15	3.87	428-126	2-2064	35					207	13-15	

SUNSTAR

HONDA

For the complete Sunstar part numbers:

Combine the Appl code for your desired product with the number of teeth.

EXAMPLE:	APPL CODE	TEETH #	2-355943

HONDA

MODEL	OE GEARING INFO						REAR						FRONT		
HONDA	CC	Years	Rear	CS	Ratio	Chain Links	Steel Appl Code	# Teeth	Alum Appl Code	# Teeth	Works Z Appl Code	# Teeth	CS Appl Code	# Teeth	Comments / Notes
ATC200	200	1981-82	47	11	4.27	520-90	2-3658	47					305	11,12	Use Stock Dampers w/ Rear Sprocket
ATC200	200	1983	47	11	4.27	520-90							305	11,12	
ATC200M	200	1984-85	47	11	4.27	520-92							305	11,12	
ATC200S	200	1984-86	43	11	3.91	520-84							305	11,12	
ATC200X	200	1983-85	40	12	3.33	520-88	2-3017	40					303	12,13	
ATC200X	200	1986-87	38	13	2.92	520-86	2-3392	38					338	12-14	
CM200T Twinstar	200	1980-82	35	15	2.33	428-112	2-2064	35					207	13-15	
TLR200 Reflex	200	1986-87	44	13	3.38	520-96							306	12-14	
TR200 Fatcat	200	1986-87	39	13	3.00	520-100							338	12-14	
TRX200 Fourtrax	200	1990-91	42	12	3.50	520-88	2-3462	42					339	12	
TRX200D Fourtrax Type II	200	1991-97		42	12	3.50	520-88	2-3462	42						339 12
TRX200SX	200	1986-88	42	12	3.50	520-80							339	12	
XL200R	200	1983-84	45	13	3.46	520-104							306	12-14	
XR200	200	1980-84	50	13	3.85	520-102	2-3079	50					306	12-14	
XR200R	200	1981-83	50	13	3.85	520-106							306	12-14	
XR200R	200	1984-85	50	13	3.85	520-108	2-3592	40,45-52	5-3592	43-54*	8-3592	48E-52E	306	12-14	*Indicates Blk Ano Avail in 48-52t
XR200R	200	1986-03	47	13	3.62	520-108	2-3592	40,45-52	5-3592	43-54*	8-3592	48E-52E	306	12-14	*Indicates Blk Ano Avail in 48-52t
CRF230F	230	2003-09	50	13	3.85	520-110	2-3559	39,43-45,47-53	5-3559	43-55*	8-3559	48E-52E	348	12-14	*Indicates Blk Ano Avail in 48-53t
CRF230F	230	2012-16	50	13	3.85	520-120	2-3559	39,43-45,47-53	5-3559	43-55*	8-3559	48E-52E	348	12-14	*Indicates Blk Ano Avail in 48-53t
CRF230L	230	2008-09	39	13	3.00	520-100	2-3559	39,43-45,47-53	5-3559	43-55*	8-3559	48E-52E	348	12-14	*Indicates Blk Ano Avail in 48-53t
CRF230M	230	2009-10	39	13	3.00	520-100	2-3559	39,43-45,47-53	5-3559	43-55*	8-3559	48E-52E	348	12-14	*Indicates Blk Ano Avail in 48-53t
ATC250R	250	1983-84	42	13	3.23	520-90							309	13-15	
ATC250R	250	1985	39	13	3.00	520-96	2-3459	39					309	13-15	
ATC250R	250	1986	39	13	3.00	520-96	2-3465	36-40	5-3465	36-40			309	13-15	
CB250 Nighthawk	250	1991-08	33	14	2.36	520-106	2-3082	33					307	14,15	
CBR250R	250	2011-13	38	14	2.72	520-108	2-3515	38					361	13-15	
CM250C	250	1982	32	14	2.29	520-104	2-3082	33					306	12-14	
CMX250 Rebel	250	1985-87	33	14	2.36	520-106	2-3079	33					307	14,15	
CMX250/C Rebel	250	1996-15	33	14	2.36	520-108	2-3079	33					307	14,15	
CR250R Elsinore	250	1981	54	14	3.86	520-114							309	13-15	
CR250R	250	1982-83	54	14	3.86	520-114							309	13-15	
CR250R	250	1984-85	51	14	3.64	520-114	2-3559	39,43-45,47-53	5-3559	43-55*	8-3559	48E-52E	309	13-15	*Indicates Blk Ano Avail in 48-53t
CR250R	250	1986	51	14	3.64	520-114	2-3559	39,43-45,47-53	5-3559	43-55*	8-3559	48E-52E	340	14	*Indicates Blk Ano Avail in 48-53t
CR250R	250	1987	53	14	3.79	520-114	2-3559	39,43-45,47-53	5-3559	43-55*	8-3559	48E-52E	340	14	*Indicates Blk Ano Avail in 48-53t
CR250R	250	1988-91	51	14	3.64	520-116	2-3559	39,43-45,47-53	5-3559	43-55*	8-3559	48E-52E	347	12-15	*Indicates Blk Ano Avail in 48-53t
CR250R	250	1992-93	49	13	3.77	520-112	2-3559	39,43-45,47-53	5-3559	43-55*	8-3559	48E-52E	347	12-15	*Indicates Blk Ano Avail in 48-53t
CR250R	250	1994-95	49	13	3.77	520-114	2-3559	39,43-45,47-53	5-3559	43-55*	8-3559	48E-52E	347	12-15	*Indicates Blk Ano Avail in 48-53t
CR250R	250	1996-01	50	13	3.85	520-114	2-3559	39,43-45,47-53	5-3559	43-55*	8-3559	48E-52E	347	12-15	*Indicates Blk Ano Avail in 48-53t
CR250R	250	2002-03	48	13	3.69	520-114	2-3559	39,43-45,47-53	5-3559	43-55*	8-3559	48E-52E	347	12-15	*Indicates Blk Ano Avail in 48-53t
CR250R	250	2004	50	13	3.85	520-114	2-3559	39,43-45,47-53	5-3559	43-55*	8-3559	48E-52E	347	12-15	*Indicates Blk Ano Avail in 48-53t
CR250R	250	2005-07	49	13	3.77	520-114	2-3559	39,43-45,47-53	5-3559	43-55*	8-3559	48E-52E	347	12-15	*Indicates Blk Ano Avail in 48-53t
CRF250L	250	2013-14	40	14	2.86	520-106	2-3565	40,42,45,48,49	5-3565	48			361	13-15	
CRF250R	250	2004-09	51	13	3.92	520-114	2-3559	39,43-45,47-53	5-3559	43-55*	8-3559	48E-52E	312	12-14	*Indicates Blk Ano Avail in 48-53t
CRF250R	250	2010	48	13	3.69	520-116	2-3559	39,43-45,47-53	5-3559	43-55*	8-3559	48E-52E	312	12-14	*Indicates Blk Ano Avail in 48-53t
CRF250R	250	2011-16	49	13	3.77	520-116	2-3559	39,43-45,47-53	5-3559	43-55*	8-3559	48E-52E	312	12-14	*Indicates Blk Ano Avail in 48-53t
CRF250X	250	2004-16	53	14	3.79	520-114	2-3559	39,43-45,47-53	5-3559	43-55*	8-3559	48E-52E	312	12-14	*Indicates Blk Ano Avail in 48-53t
NX250	250	1988-90	41	13	3.15	520-102	2-3589	41,48,53							
TRX250R Fourtrax	250	1986-87	39	13	3.00	520-96	2-3465	36-40	5-3465	36-40			309	13-15	
TRX250R Fourtrax	250	1988-89	38	13	2.92	520-92	2-3465	36-40	5-3465	36-40			309	13-15	
TRX250X Fourtrax	250	1987-88	38	13	2.92	520-86	2-3465	36-40	5-3465	36-40			338	12-14	
TRX250X Fourtrax	250	1991-92	38	13	2.92	520-86	2-3465	36-40	5-3465	36-40			338	12-14	
VTR250 Interceptor	250	1988	45	14	3.21	520-104	2-3589	41,48,53							
XL250	250	1972	48	15	3.20	520-102							319	14	
XL250	250	1974-76	48	15	3.20	520-102							319	14	
XL250R	250	1982-83	47	14	3.36	520-102	2-3589	41,48,53					320	13-15	
XL250R	250	1984-87	40	13	3.08	520-102							306	12-14	

SUNSTAR

HONDA

For the complete Sunstar part numbers:

Combine the Appl code for your desired product with the number of teeth.

EXAMPLE:	APPL CODE	TEETH #	2-355943

HONDA

MODEL	OE GEARING INFO						REAR						FRONT		
HONDA	CC	Years	Rear	CS	Ratio	Chain Links	Steel Appl Code	# Teeth	Alum Appl Code	# Teeth	Works Z Appl Code	# Teeth	CS Appl Code	# Teeth	Comments / Notes
XL250S	250	1978-81	53	14	3.79	520-102	2-3589	41,48,53					319	14	
XR250	250	1979-80	53	13	4.08	520-102	2-3589	41,48,53							
XR250L	250	1991-96	40	13	3.08	520-104							348	12-14	
XR250R	250	1981-82	53	13	4.08	520-106	2-3589	41,48,53							
XR250R	250	1984-85	50	13	3.85	520-108	2-3592	40,45-52	5-3592	43-54*	8-3592	48E-52E	306	12-14	*indicates Blk Ano Avail in 48-52t
XR250R	250	1986-87	48	13	3.69	520-108	2-3592	40,45-52	5-3592	43-54*	8-3592	48E-52E	306	12-14	*indicates Blk Ano Avail in 48-52t
XR250R	250	1988-89	48	13	3.69	520-108	2-3592	40,45-52	5-3592	43-54*	8-3592	48E-52E	348	12-14	*indicates Blk Ano Avail in 48-52t
XR250R	250	1990-95	48	13	3.69	520-108	2-3565	40,42,45,48,49	5-3565	48			348	12-14	
XR250R	250	1996-04	48	13	3.69	520-108	2-3559	39,43-45,47-53	5-3559	43-55*	8-3559	48E-52E	361	13-15	*indicates Blk Ano Avail in 48-53t
CB300F	300	2015	36	14	2.57	520-120							361	13-15	
CBR300R	300	2015	36	14	2.57	520-							361	13-15	
TRX300EX Fourtrax	300	1993-08	38	13	2.92	520-86	2-3465	36-40	5-3465	36-40			338	12-14	
TRX300X	300	2009	38	13	2.92	520-86	2-3465	36-40	5-3465	36-40			338	12-14	
ATC350X	350	1985	40	13	3.08	520-90	2-3368	40					336	13,14	
ATC350X	350	1986	40	13	3.08	520-90							336	13,14	
CB350	350	1969-72	36	16	2.25	530-94							508	16,17	
CB350F	350	1972	38	17	2.24	530-96							508	16,17	
CB350F	350	1974	38	17	2.24	530-96							508	16,17	
CB350G	350	1973	36	16	2.25	530-94							508	16,17	
CL350	350	1968-73	38	16	2.38	530-96							508	16,17	
SL350	350	1970	40	16	2.50	530-98							508	16,17	
SL350	350	1971	40	16	2.50	520-100							319	14	
SL350	350	1972-73	42	16	2.63	520-100							319	14	
XL350	350	1974-78	45	15	3.00	530-100							508	16,17	
XL350R	350	1984-85	40	14	2.86	520-102	2-3592	40,45-52	5-3592	43-54*	8-3592	48E-52E	302	14	*indicates Blk Ano Avail in 48-52t
XR350R	350	1983-84	42	14	3.00	520-104	2-3592	40,45-52	5-3592	43-54*	8-3592	48E-52E	302	14	*indicates Blk Ano Avail in 48-52t
XR350R	350	1985	42	14	3.00	520-106	2-3592	40,45-52	5-3592	43-54*	8-3592	48E-52E	336	13,14	*indicates Blk Ano Avail in 48-52t
CB360	360	1973	34	16	2.13	530-94							508	16,17	
CB360G	360	1974	34	16	2.13	530-94							508	16,17	
CB360T	360	1975-76	34	16	2.13	530-94							508	16,17	
CJ360T	360	1976-77	33	16	2.06	530-98							508	16,17	
CL360	360	1974-75	34	16	2.13	530-94							508	16,17	
CB400A Automatic	400	1978	37	16	2.31	530-100	2-5178	35					508	16,17	
CB400F	400	1975-77	38	17	2.24	530-96							508	16,17	
CB400F CB-1	400	1989-90	41	15	2.73	525-104	2-4329	44							
CB400T Hawk	400	1980-81	37	16	2.31	530-100	2-5178	35					508	16,17	
CB400T Hawk I	400	1978-79	37	16	2.31	530-100	2-5178	35					508	16,17	
CB400T Hawk II	400	1978-79	37	16	2.31	530-100	2-5178	35					508	16,17	
CM400A	400	1979-81	35	16	2.19	530-102	2-5178	35					508	16,17	
CM400C	400	1981	35	16	2.19	530-102	2-5178	35					508	16,17	
CM400E	400	1980-81	35	16	2.19	530-102	2-5178	35					508	16,17	
CM400T	400	1979-81	35	16	2.19	530-102	2-5178	35					508	16,17	
NS400R	400	1986	40	16	2.50	530-108							515	15	
TRX400EX	400	1999-04	38	15	2.53	520-92	2-3465	36-40	5-3465	36-40			362	13-16	
TRX400EX	400	2005-08	39	14	2.79	520-94	2-3465	36-40	5-3465	36-40			356	13-15	
TRX400X	400	2009-14	39	14	2.79	520-94	2-3465	36-40	5-3465	36-40			356	13-15	
XR400R	400	1996-04	45	15	3.00	520-108	2-3559	39,43-45,47-53	5-3559	43-55*	8-3559	48E-52E	362	13-16	*indicates Blk Ano Avail in 48-53t
CB450	450	1968-74	35	15	2.20	530-92							504	15	
CB450SC Nighthawk	450	1982-86	36	17	2.12	530-106	2-5332	36,44					508	16,17	
CB450T Hawk	450	1982	36	16	2.25	530-100	2-5178	35					508	16,17	
CL450	450	1969-72	35	17	2.06	530-92							504	15	
CL450	450	1973-74	35	16	2.19	530-92							504	15	
CM450A Automatic	450	1982	34	17	2.00	530-102	2-5178	35					508	16,17	
CM450A	450	1983	34	17	2.00	530-102	2-5332	36,44					508	16,17	
CM450C	450	1982	34	17	2.00	530-102	2-5178	35					508	16,17	
CM450E	450	1973-74	34	17	2.00	530-102	2-5178	35					508	16,17	

SUNSTAR

HONDA

For the complete Sunstar part numbers:

Combine the Appl code for your desired product with the number of teeth.

EXAMPLE:	APPL CODE	TEETH #	2-355943

HONDA

MODEL	OE GEARING INFO						REAR						FRONT		
HONDA	CC	Years	Rear	CS	Ratio	Chain Links	Steel Appl Code	# Teeth	Alum Appl Code	# Teeth	Works Z Appl Code	# Teeth	CS Appl Code	# Teeth	Comments / Notes
CM450E	450	1982-83	34	17	2.00	530-102	2-5178	35					508	16,17	
CMX450C	450	1986-87	37	17	2.18	525-112							405	17	
CR450R	450	1981	54	14	3.86	520-116							309	13-15	
CRF450R	450	2002-03	50	13	3.85	520-114	2-3559	39,43-45,47-53	5-3559	43-55*	8-3559	48E-52E	347	12-15	*indicates Blk Ano Avail in 48-53t
CRF450R	450	2004-12	48	13	3.69	520-114	2-3559	39,43-45,47-53	5-3559	43-55*	8-3559	48E-52E	347	12-15	*indicates Blk Ano Avail in 48-53t
CRF450R	450	2013-16	48	13	3.69	520-116	2-3559	39,43-45,47-53	5-3559	43-55*	8-3559	48E-52E	347	12-15	*indicates Blk Ano Avail in 48-53t
CRF450X	450	2005-16	51	13	3.92	520-114	2-3559	39,43-45,47-53	5-3559	43-55*	8-3559	48E-52E	347	12-15	*indicates Blk Ano Avail in 48-53t
TRX450R	450	2004-05	38	14	2.71	520-94	2-3465	36-40	5-3465	36-40			347	12-15	
TRX450R/ER	450	2006-14	38	13	2.92	520-96	2-3465	36-40	5-3465	36-40			347	12-15	
CR480	480	1982-83	54	14	3.86	520-118							309	13-15	
CB500F	500	2013-14	41	15	2.73	520-112	2-3490	41,43					3C7	15	
CB500K	500	1971-73	34	17	2.00	530-100	2-5407	37					507	17,18	
CBR500R	500	2013-14	41	15	2.73	520-112	2-3490	41,43					3C7	15	
CB500X	500	2013-14	41	15	2.73	520-112	2-3490	41,43					3C7	15	
CR500	500	1984-85	51	14	3.64	520-116	2-3559	39,43-45,47-53	5-3559	43-55*	8-3559	48E-52E	309	13-15	*indicates Blk Ano Avail in 48-53t
CR500R	500	1986-87	51	14	3.64	520-116	2-3559	39,43-45,47-53	5-3559	43-55*	8-3559	48E-52E	340	14	*indicates Blk Ano Avail in 48-53t
CR500R	500	1988-91	51	14	3.64	520-116	2-3559	39,43-45,47-53	5-3559	43-55*	8-3559	48E-52E	347	12-15	*indicates Blk Ano Avail in 48-53t
CR500R	500	1992-01	49	14	3.50	520-114	2-3559	39,43-45,47-53	5-3559	43-55*	8-3559	48E-52E	347	12-15	*indicates Blk Ano Avail in 48-53t
VF500C V30 Magna	500	1984-85	44	15	2.93	530-108	2-5332	36,44					515	15	
VF500F Interceptor	500	1984-85	44	15	2.93	530-108	2-5332	36,44					515	15	
VF500F Interceptor	500	1986	43	15	2.87	530-108	2-5332	36,44					515	15	
XL500R	500	1982	43	15	2.87	520-100	2-3589	41,48,53					320	13-15	
XL500S	500	1979-81	41	14	2.93	520-96	2-3589	41,48,53					320	13-15	
XR500	500	1979-80	48	14	3.43	520-100	2-3589	41,48,53					320	13-15	
XR500R	500	1981-82	48	14	3.43	520-104	2-3589	41,48,53					320	13-15	
XR500R	500	1983-84	48	14	3.43	520-104	2-3592	40,45-52	5-3592	43-54*	8-3592	48E-52E	320	13-15	*indicates Blk Ano Avail in 48-52t
CB550K	550	1974-78	37	17	2.18	530-100	2-5407	37					507	17,18	
CB550F	550	1975-79	37	17	2.18	530-100	2-5407	37					507	17,18	
CB600F CB 599	600	2004-06	42	15	2.80	525-112	2-4483	38-39,41-45					412	14,15	
CBR600F Hurricane	600	1987-90	44	15	2.93	530-110	2-5332	36,44					520	14,15	
CBR600F2	600	1991-94	43	15	2.87	530-108	2-5486	39,41,43-45					520	14,15	
CBR600F3	600	1995-96	43	15	2.87	530-108	2-5486	39,41,43-45					520	14,15	
CBR600 SJR	600	1996	43	15	2.87	530-108	2-5486	39,41,43-45					520	14,15	
CBR600F3	600	1997-98	43	15	2.87	525-108	2-4483	38-39,41-45					412	14,15	
CBR600F4	600	1999-00	45	16	2.81	525-108	2-4483	38-39,41-45					411	15,16	
CBR600F4I	600	2001-06	46	16	2.88	525-108	2-4633	41,42,43,44,46					411	15,16	
CBR600F4I	600	2001-06	46	16	2.88	525-108			5-3626	40-49			392	14-16	525>520 Conversion
CBR600RR	600	2003-06	43	16	2.88	525-112	2-4633	41,42,43,44,46					411	15,16	
CBR600RR	600	2003-06	43	16	2.88	525-112			5-3626	40-49			392	14-16	525>520 Conversion
CBR600RR	600	2007-15	42	16	2.63	525-112	2-4633	41,42,43,44,46					411	15,16	
CBR600RR	600	2007-15	42	16	2.63	525-112			5-3626	40-49			392	14-16	525>520 Conversion
CBR600SE	600	1997-98	43	15	2.87	525-108	2-4483	38-39,41-45					412	14,15	
VT600C Shadow VLX	600	1988	44	16	2.75	525-120	2-4329	44							
VT600C Shadow VLX	600	1989-07	44	16	2.75	525-120	2-4329	44					407	15,16	
VT600CD Shadow Deluxe	600	1989-07	44	16	2.75	525-120	2-4329	44							407 15,16
XL600R	600	1983-87	43	15	2.87	520-104	2-3589	41,48,53					320	13-15	
XL600V Transalp	600	1988-90	47	15	3.13	525-118							407	15,16	
XR600R	600	1985-87	48	14	3.43	520-110	2-3592	40,45-52	5-3592	43-54*	8-3592	48E-52E	320	13-15	*indicates Blk Ano Avail in 48-52t
XR600R	600	1988-90	50	14	3.57	520-112							320	13-15	
XR600R	600	1991-00	48	14	3.43	520-110	2-3565	40,42,45,48,49	5-3565	48			356	13-15	
CB650	650	1979	40	16	2.50	530-102	2-5323	38,40,43,45,48					505	17	
CB650	650	1980-81	40	16	2.50	530-104	2-5323	38,40,43,45,48					505	17	
CB650	650	1982	39	17	2.29	530-102	2-5323	38,40,43,45,48					505	17	
CB650C Custom	650	1980-81	39	16	2.44	530-104	2-5323	38,40,43,45,48					505	17	
CB650SC Nighthawk	650	1982	38	17	2.24	530-106	2-5323	38,40,43,45,48					505	17	
CBR650F	650	2015	42	15	2.80	525-	2-4483	38-39,41-45					505	17	

SUNSTAR

HONDA

For the complete Sunstar part numbers:

Combine the Appl code for your desired product with the number of teeth.

EXAMPLE:	APPL CODE	TEETH #	2-355943

HONDA

MODEL	OE GEARING INFO						REAR						FRONT		
HONDA	CC	Years	Rear	CS	Ratio	Chain Links	Steel Appl Code	# Teeth	Alum Appl Code	# Teeth	Works Z Appl Code	# Teeth	CS Appl Code	# Teeth	Comments / Notes
NT650 Hawk GT	650	1988-91	44	16	2.75	525-112							407	15,16	
XR650L	650	1993-14	45	15	3.00	520-110	2-3565	40,42,45,48,49	5-3565	48			356	13-15	
XR650R	650	2000-07	48	14	3.43	520-110	2-3559	39,43-45,47-53	5-3559	43-55*	8-3559	48E-52E	379	14,15	*indicates Blk Ano Avail in 48-53t
CTX700	700	2014	43	16	2.69	520-	2-3490	41,43							
NC700	700	2013-15	43	16	2.69	520-	2-3490	41,43							
TRX700XX	700	2008-09	37	14	2.64	520-80							347	12-15	
VF700F Interceptor	700	1984-85	44	16	2.75	530-110	2-5338	40,42,44					512	16-18	
VFR700F Interceptor	700	1986-87	45	16	2.81	530-110	2-5338	40,42,44					512	16-18	
CB750	750	1969	45	17	2.65	530-100	2-5323	38,40,43,45,48					507	17,18	
CB750	750	1970	48	17	2.82	530-100	2-5323	38,40,43,45,48					507	17,18	
CB750	750	1972-76	48	18	2.67	530-100	2-5323	38,40,43,45,48					507	17,18	
CB750 Nighthawk	750	1991-03	38	15	2.53	525-110	2-4335	38					410	15	
CB750A	750	1976	48	17	2.82	530-104	2-5323	38,40,43,45,48					507	17,18	
CB750A	750	1977-78	42	15	2.80	630-88	2-5323	38,40,43,45,48					507	17,18	630>530 Conversion
CB750C Custom	750	1980-82	43	18	2.39	530-106	2-5323	38,40,43,45,48					512	16-18	
CB750F	750	1975-76	48	17	2.82	530-102	2-5323	38,40,43,45,48					507	17,18	
CB750F Supersport	750	1977-78	43	14	3.07	630-88	2-5323	38,40,43,45,48							630>530 Conversion
CB750F Supersport	750	1979	38	15	2.53	630-90	2-5338	40,42,44					512	16-18	630>530 Conversion
CB750F Supersport	750	1980-82	46	18	2.56	530-108	2-5338	40,42,44					512	16-18	
CB750K	750	1970-76	48	18	2.67	530-100	2-5323	38,40,43,45,48					507	17,18	
CB750K	750	1977-78	41	15	2.73	630-88	2-5323	38,40,43,45,48							630>530 Conversion
CB750K	750	1979	38	15	2.53	630-90	2-5323	38,40,43,45,48					512	16-18	630>530 Conversion
CB750K	750	1980-82	46	18	2.56	530-108	2-5323	38,40,43,45,48					512	16-18	
CB750L Limited	750	1979	38	15	2.53	630-90	2-5323	38,40,43,45,48					512	16-18	630>530 Conversion
CB750SC Nighthawk	750	1982-83	43	18	2.39	530-98							512	16-18	
VF750C Magna	750	1994-03	40	16	2.50	530-118	2-5338	40,42,44					522	15,16	
VF750CD Magna Deluxe	750	1995-00	40	16	2.50	530-118	2-5338	40,42,44					522	15,16	
VF750F Interceptor	750	1983-84	44	17	2.59	530-110	2-5338	40,42,44					512	16-18	
VFR750F Interceptor	750	1986	45	16	2.81	530-110	2-5338	40,42,44					512	16-18	
VFR750F Interceptor	750	1990-97	43	16	2.69	530-112	2-5694	43					522	15,16	
VT750 Shadow (all)	750	1998-07	41	17	2.41	525-122	2-4483	38-39,41-45					418	17	
VT750RS Shadow	750	2010-13	38	17	2.24	525-112	2-4483	38-39,41-45					418	17	
VT750S Shadow	750	2013	38	17	2.24	525-120	2-4483	38-39,41-45					418	17	
VFR800FI	800	1998-01	43	17	2.53	530-108	2-5694	43					512	16-18	
VFR800FI/ABS	800	2002-09	43	16	2.69	530-110	2-5695	43,44					512	16-18	
CB900F CB919	900	2002-07	43	16	2.69	530-114	2-5486	39,41,43-45					522	15,16	
CB900F	900	1981-82	44	17	2.59	530-106	2-5338	40,42,44					512	16-18	
CBR900RR	900	1993-95	43	16	2.69	530-108	2-5486	39,41,43-45					522	15,16	
CBR900RR	900	1996-99	43	16	2.69	525-108	2-4483	38-39,41-45					411	15,16	
CBR929RR	929	2000-01	43	16	2.69	530-116	2-5635	40-43					522	15,16	
CBR929RR	929	2000-01	43	16	2.69	530-116			5-3626	40-49			393	15,16	530>520 Conversion
CBR954RR	954	2002-03	43	16	2.69	530-116	2-5635	40-43					522	15,16	
CBR954RR	954	2002-03	43	16	2.69	530-116			5-3626	40-49			393	15,16	530>520 Conversion
CB1000	1000	1994-95	42	17	2.47	530-120	2-5338	40,42,44					512	16-18	
CB1000R	1000	2011-15	44	16	2.75	530-120	2-5695	43,44					522	15,16	
CBR1000F Hurricane	1000	1987-88	43	17	2.53	530-114	2-5338	40,42,44					512	16-18	
CBR1000F Hurricane	1000	1990-91	42	17	2.47	530-114	2-5338	40,42,44					512	16-18	
CBR1000F	1000	1993-96	42	17	2.47	530-120	2-5338	40,42,44					512	16-18	
CBR1000RR	1000	2004-05	41	16	2.56	530-114	2-5635	40-43					522	15,16	
CBR1000RR	1000	2004-05	41	16	2.56	530-114			5-3626	40-49			393	15,16	530>520 Conversion
CBR1000RR	1000	2006-07	42	16	2.63	530-114	2-5635	40-43					522	15,16	
CBR1000RR	1000	2006-07	42	16	2.63	530-114			5-3626	40-49			393	15,16	530>520 Conversion
CBR1000RR	1000	2008-14	42	16	2.63	530-116	2-5635	40-43					522	15,16	
CBR1000RR	1000	2015	42	16	2.63	530-120	2-5635	40-43					522	15,16	
CBR1000RR	1000	2008-14	42	16	2.63	530-116			5-3626	40-49			393	15,16	530>520 Conversion
CBR1000RR	1000	2015	42	16	2.63	530-120			5-3626	40-49			393	15,16	530>520 Conversion
CBR1000S	1000	2014-15	42	16	2.63	530-116	2-5635	40-43					522	15,16	
CBR1000S	1000	2014-15	42	16	2.63	530-116			5-3626	40-49			393	15,16	530>520 Conversion

SUNSTAR

HONDA/HUSABERG

For the complete Sunstar part numbers:

Combine the Appl code for your desired product with the number of teeth.

EXAMPLE:	APPL CODE	TEETH #	2-355943

HONDA

MODEL	OE GEARING INFO						REAR						FRONT		
HONDA	CC	Years	Rear	CS	Ratio	Chain Links	Steel Appl Code	# Teeth	Alum Appl Code	# Teeth	Works Z Appl Code	# Teeth	CS Appl Code	# Teeth	Comments / Notes
RVT1000 RC51	1000	2000-06	40	16	2.50	530-104	2-5635	40-43					522	15,16	
RVT1000 RC51	1000	2000-06	40	16	2.50	530-104			5-3626	40-49			393	15,16	530>520 Conversion
VF1000F Interceptor		1000	1984	43	17	2.53	530-110	2-5338	40,42,44						512 16-18
VF1000R	1000	1985-86	44	17	2.59	530-110	2-5338	40,42,44					512	16-18	
VTR1000F Super Hawk		1000	1998-05	41	16	2.56	530-102		2-5486	39,41,43-45					522 15,16
CB1100	1100	2013-14	39	18	2.17	530-	2-5486	39,41,43-45					512	16-18	
CB1100F	1100	1983	42	17	2.47	530-104	2-5338	40,42,44					512	16-18	
CBR1100XX	1100	1997-04	45	17	2.65	530-110	2-5486	39,41,43-45					529	17	
CBX 1100	1100	1979-80	42	18	2.33	530-102	2-5338	40,42,44							
CBX 1100	1100	1981-82	42	18	2.33	530-108	2-5338	40,42,44							

HUSABERG

MODEL	OE GEARING INFO						REAR						FRONT		
HUSABERG	CC	Years	Rear	CS	Ratio	Chain Links	Steel Appl Code	# Teeth	Alum Appl Code	# Teeth	Works Z Appl Code	# Teeth	CS Appl Code	# Teeth	Comments / Notes
TE125	125	2013	50	13	3.85	520-	2-3547	40,42-43,46-53	5-3547	43,45-46,48-53*	8-3547	48E-52E	357	12-15	*indicates Blk Ano & Orange Ano Avail in 48-53t
FE250	250	2013	50	13	3.85	520-	2-3547	40,42-43,46-53	5-3547	43,45-46,48-53*	8-3547	48E-52E	357	12-15	*indicates Blk Ano & Orange Ano Avail in 48-53t
TE250	250	2011-13	50	13	3.85	520-118	2-3547	40,42-43,46-53	5-3547	43,45-46,48-53*	8-3547	48E-52E	357	12-15	*indicates Blk Ano & Orange Ano Avail in 48-53t
TE300	300	2011-13	50	13	3.85	520-118	2-3547	40,42-43,46-53	5-3547	43,45-46,48-53*	8-3547	48E-52E	357	12-15	*indicates Blk Ano & Orange Ano Avail in 48-53t
FC350 4-Speed	350	2000-01	44	15	2.93	520-	2-3547	40,42-43,46-53	5-3547	43,45-46,48-53*	8-3547	48E-52E			*indicates Blk Ano & Orange Ano Avail in 48-53t
FC350 6-Speed	350	2000-01	48	15	3.20	520-	2-3547	40,42-43,46-53	5-3547	43,45-46,48-53*	8-3547	48E-52E			*indicates Blk Ano & Orange Ano Avail in 48-53t
FE350	350	1996-01	48	14	3.43	520-	2-3547	40,42-43,46-53	5-3547	43,45-46,48-53*	8-3547	48E-52E			*indicates Blk Ano & Orange Ano Avail in 48-53t
FE350	350	2013	52	13	4.00	520-	2-3547	40,42-43,46-53	5-3547	43,45-46,48-53*	8-3547	48E-52E	357	12-15	*indicates Blk Ano & Orange Ano Avail in 48-53t
FE390	390	2010-12	52	13	4.00	520-	2-3547	40,42-43,46-53	5-3547	43,45-46,48-53*	8-3547	48E-52E	357	12-15	*indicates Blk Ano & Orange Ano Avail in 48-53t
FC400 4-Speed	400	2000-01	44	15	2.93	520-	2-3547	40,42-43,46-53	5-3547	43,45-46,48-53*	8-3547	48E-52E			*indicates Blk Ano & Orange Ano Avail in 48-53t
FC400 6-Speed	400	2000-03	48	15	3.20	520-	2-3547	40,42-43,46-53	5-3547	43,45-46,48-53*	8-3547	48E-52E			*indicates Blk Ano & Orange Ano Avail in 48-53t
FE400	400	2000-03	48	14	3.43	520-114	2-3547	40,42-43,46-53	5-3547	43,45-46,48-53*	8-3547	48E-52E			*indicates Blk Ano & Orange Ano Avail in 48-53t
FC450	450	2004-08	48	13	3.69	520-116	2-3547	40,42-43,46-53	5-3547	43,45-46,48-53*	8-3547	48E-52E			*indicates Blk Ano & Orange Ano Avail in 48-53t
FE450	450	2004-08	48	14	3.43	520-	2-3547	40,42-43,46-53	5-3547	43,45-46,48-53*	8-3547	48E-52E			*indicates Blk Ano & Orange Ano Avail in 48-53t
FE450	450	2009-13	52	13	4.00	520-	2-3547	40,42-43,46-53	5-3547	43,45-46,48-53*	8-3547	48E-52E	357	12-15	*indicates Blk Ano & Orange Ano Avail in 48-53t
FX450	450	2010-12	52	13	4.00	520-	2-3547	40,42-43,46-53	5-3547	43,45-46,48-53*	8-3547	48E-52E	357	12-15	*indicates Blk Ano & Orange Ano Avail in 48-53t
FC470	470	2002	48			520-	2-3547	40,42-43,46-53	5-3547	43,45-46,48-53*	8-3547	48E-52E			*indicates Blk Ano & Orange Ano Avail in 48-53t
FC470 6-Speed	470	2002	48			520-	2-3547	40,42-43,46-53	5-3547	43,45-46,48-53*	8-3547	48E-52E			*indicates Blk Ano & Orange Ano Avail in 48-53t
FX470	470	2002	48			520-	2-3547	40,42-43,46-53	5-3547	43,45-46,48-53*	8-3547	48E-52E			*indicates Blk Ano & Orange Ano Avail in 48-53t
FC501 4-Speed	501	2000-01	44	15	2.93	520-	2-3547	40,42-43,46-53	5-3547	43,45-46,48-53*	8-3547	48E-52E			*indicates Blk Ano & Orange Ano Avail in 48-53t
FC501 6-Speed	501	2000-01	48	15	3.20	520-	2-3547	40,42-43,46-53	5-3547	43,45-46,48-53*	8-3547	48E-52E			*indicates Blk Ano & Orange Ano Avail in 48-53t
FE501	501	2000-02	48	14	3.43	520-114	2-3547	40,42-43,46-53	5-3547	43,45-46,48-53*	8-3547	48E-52E			*indicates Blk Ano & Orange Ano Avail in 48-53t
FE501E	501	2003-04	48	15	3.20	520-116	2-3547	40,42-43,46-53	5-3547	43,45-46,48-53*	8-3547	48E-52E			*indicates Blk Ano & Orange Ano Avail in 48-53t
FE501	501	2013	52	13	4.00	520-	2-3547	40,42-43,46-53	5-3547	43,45-46,48-53*	8-3547	48E-52E	357	12-15	*indicates Blk Ano & Orange Ano Avail in 48-53t
FC550 4 Speed	550	2003-04	42	15	2.80	520-	2-3547	40,42-43,46-53	5-3547	43,45-46,48-53*	8-3547	48E-52E			*indicates Blk Ano & Orange Ano Avail in 48-53t
FC550	550	2005-06	48	14	3.43	520-	2-3547	40,42-43,46-53	5-3547	43,45-46,48-53*	8-3547	48E-52E			*indicates Blk Ano & Orange Ano Avail in 48-53t
FE550	550	2004-08	48	15	3.20	520-	2-3547	40,42-43,46-53	5-3547	43,45-46,48-53*	8-3547	48E-52E			*indicates Blk Ano & Orange Ano Avail in 48-53t
FE570	570	2009-12	52	13	4.00	520-118	2-3547	40,42-43,46-53	5-3547	43,45-46,48-53*	8-3547	48E-52E	357	12-15	*indicates Blk Ano & Orange Ano Avail in 48-53t
FS570 Supermoto	570	2010-11	38	14	2.71	520-118	2-3547	40,42-43,46-53	5-3547	43,45-46,48-53*	8-3547	48E-52E	357	12-15	*indicates Blk Ano & Orange Ano Avail in 48-53t
FC600 4-Speed	600	2000-01	44	15	2.93	520-	2-3547	40,42-43,46-53	5-3547	43,45-46,48-53*	8-3547	48E-52E			*indicates Blk Ano & Orange Ano Avail in 48-53t
FC600 6-Speed	600	2000-01	48	15	3.20	520-	2-3547	40,42-43,46-53	5-3547	43,45-46,48-53*	8-3547	48E-52E			*indicates Blk Ano & Orange Ano Avail in 48-53t
FE600	600	2000-03	48	14	3.43	520-114	2-3547	40,42-43,46-53	5-3547	43,45-46,48-53*	8-3547	48E-52E			*indicates Blk Ano & Orange Ano Avail in 48-53t
FE650	650	2003-08	45	15	3.00	520-	2-3547	40,42-43,46-53	5-3547	43,45-46,48-53*	8-3547	48E-52E			*indicates Blk Ano & Orange Ano Avail in 48-53t
FS650C	650	2005-08	40	15	2.67	520-	2-3547	40,42-43,46-53	5-3547	43,45-46,48-53*	8-3547	48E-52E			*indicates Blk Ano & Orange Ano Avail in 48-53t
FS650E	650	2003-08	40	15	2.67	520-	2-3547	40,42-43,46-53	5-3547	43,45-46,48-53*	8-3547	48E-52E			*indicates Blk Ano & Orange Ano Avail in 48-53t
FS650SM	650	2004	40	15	2.67	520-112	2-3547	40,42-43,46-53	5-3547	43,45-46,48-53*	8-3547	48E-52E			*indicates Blk Ano & Orange Ano Avail in 48-53t

SUNSTAR

HUSQVARNA

For the complete Sunstar part numbers:

Combine the Appl code for your desired product with the number of teeth.

EXAMPLE:	APPL CODE	TEETH #	2-355943

MODEL	OE GEARING INFO						REAR						FRONT		
HUSQVARNA	CC	Years	Rear	CS	Ratio	Chain Links	Steel Appl Code	# Teeth	Alum Appl Code	# Teeth	Works Z Appl Code	# Teeth	CS Appl Code	# Teeth	Comments / Notes
TC85	85	2014-15	46	14	3.29	428-124	2-2481	47,49,51	5-2481	46-51*			233	13,14	*Orange Ano Avail in 47-51t
CR125	125	1990-94	52	12	4.33	520-116	2-3631	42,43,45,47-52							
CR125	125	1995-09	50	13	3.85	520-118	2-3631	42,43,45,47-52							
CR125	125	2010-13	50	13	3.85	520-112	2-3631	42,43,45,47-52							
SM125	125	1999-08	50	13	3.85	520-	2-3631	42,43,45,47-52							
SMS125	125	2001-12	49	14	3.50	520-	2-3631	42,43,45,47-52							
TC125	125	2014-15	50	13	3.85	520-	2-3547	40,42-43,46-53	5-3547	43,45-46,48-53*	8-3547	48E-52E	357	12-15	*Indicates Blk Ano & Orange Ano avail in 48-53t
TE125	125	2015	50	14	3.57	520-	2-3547	40,42-43,46-53	5-3547	43,45-46,48-53*	8-3547	48E-52E	357	12-15	*Indicates Blk Ano & Orange Ano avail in 48-53t
WR125	125	1995-97	52	13	4.00	520-116	2-3631	42,43,45,47-52							
WR125	125	1998-13	50	13	3.85	520-114	2-3631	42,43,45,47-52							
WR125E	125	1999-11	52	13	4.00	520-	2-3631	42,43,45,47-52							
CR250	250	1992-94	48	14	3.43	520-120	2-3631	42,43,45,47-52							
CR250	250	1995-97	48	13	3.69	520-120	2-3631	42,43,45,47-52							
CR250	250	1999	50	15	3.33	520-	2-3631	42,43,45,47-52					383	13-15	
CR250	250	2000-05	48	13	3.69	520-	2-3631	42,43,45,47-52					383	13-15	
FC250	250	2014-16	50	13	3.85	520-	2-3547	40,42-43,46-53	5-3547	43,45-46,48-53*	8-3547	48E-52E	357	12-15	*Indicates Blk Ano & Orange Ano avail in 48-53t
TC250	250	2002-03	50	14	3.57	520-	2-3631	42,43,45,47-52					383	13-15	
TC250	250	2004-05	50	13	3.85	520-	2-3631	42,43,45,47-52					383	13-15	
TC250	250	2006-09	50	12	4.17	520-114	2-3631	42,43,45,47-52					383	13-15	
TC250 /R	250	2010-13	50	13	3.85	520-112	2-3631	42,43,45,47-52					383	13-15	
TC250	250	2014-15	48	13	3.69	520-	2-3547	40,42-43,46-53	5-3547	43,45-46,48-53*	8-3547	48E-52E	357	12-15	*Indicates Blk Ano & Orange Ano avail in 48-53t
TE250	250	2002-03	50	14	3.57	520-	2-3631	42,43,45,47-52					383	13-15	
TE250 /R	250	2004-13	50	13	3.85	520-	2-3631	42,43,45,47-52					383	13-15	
TE250	250	2014-15	50	13	3.85	520-	2-3547	40,42-43,46-53	5-3547	43,45-46,48-53*	8-3547	48E-52E	357	12-15	*Indicates Blk Ano & Orange Ano avail in 48-53t
TXC250	250	2008-10	50	13	3.85	520-	2-3631	42,43,45,47-52					383	13-15	
TXC250	250	2011-12	50	13	3.85	520-	2-3631	42,43,45,47-52							
WR250	250	2006-12	48	13	3.69	520-112	2-3631	42,43,45,47-52					383	13-15	
WR250E	250	1992-98	48	14	3.43	520-112	2-3631	42,43,45,47-52							
WR250E	250	1999-09	48	13	3.69	520-	2-3631	42,43,45,47-52					383	13-15	
TE300	300	2014-15	50	13	3.85	520-	2-3547	40,42-43,46-53	5-3547	43,45-46,48-53*	8-3547	48E-52E	357	12-15	*Indicates Blk Ano & Orange Ano avail in 48-53t
WR300	300	2009-12	48	13	3.69	520-112	2-3631	42,43,45,47-52					383	13-15	
TE310	310	2009-10	50	13	3.85	520-	2-3631	42,43,45,47-52					383	13-15	
TE310	310	2011-13	50	13	3.85	520-	2-3631	42,43,45,47-52							
FC350	350	2015	52	13	4.00	520-	2-3547	40,42-43,46-53	5-3547	43,45,46,48-53*	8-3547	48E-52E	357	12-15	*Indicates Blk Ano & Orange Ano avail in 48-53t
FE350/S	350	2014-15	50	13	3.85	520-	2-3547	40,42-43,46-53	5-3547	43,45-46,48-53*	8-3547	48E-52E	357	12-15	*Indicates Blk Ano & Orange Ano avail in 48-53t
TE350	350	1990-95	51	15	3.40	520-120	2-3631	42,43,45,47-52					383	13-15	
CR360	360	1992-94	48	13	3.69	520-116	2-3631	42,43,45,47-52							
WR360	360	1992-98	48	13	3.69	520-116	2-3631	42,43,45,47-52							
WR360	360	1999-02	48	15	3.20	520-	2-3631	42,43,45,47-52							
TE400	400	2001-02	50	15	3.33	520-	2-3631	42,43,45,47-52					383	13-15	
TE410	410	1995-00	48	15	3.20	520-	2-3631	42,43,45,47-52					383	13-15	
TC449	449	2011-13	53	15	3.53	520-110	2-3631	42,43,45,47-52							
TE449	449	2011-13				520-	2-3631	42,43,45,47-52							
FC450	450	2014-16	50	13	3.85	520-	2-3547	40,42-43,46-53	5-3547	43,45,46,48-53*	8-3547	48E-52E	357	12-15	*Indicates Blk Ano & Orange Ano avail in 48-53t
SM-R 450	450	2003-04	45	15	3.00	520-	2-3631	42,43,45,47-52					383	13-15	
SM-R 450	450	2005	42	15	2.80	520-	2-3631	42,43,45,47-52					383	13-15	
SM-RR 450	450	2008-09	42	13	3.23	520-106	2-3631	42,43,45,47-52					383	13-15	
TC450	450	2002-10	50	14	3.57	520-116	2-3631	42,43,45,47-52					383	13-15	
TE450	450	2002-06	50	15	3.33	520-116	2-3631	42,43,45,47-52					383	13-15	
TE450	450	2007-10	47	13	3.62	520-112	2-3631	42,43,45,47-52					383	13-15	
TXC450	450	2008-11	47	13	3.62	520-	2-3631	42,43,45,47-52					383	13-15	
FE501/S	501	2015	50	13	3.85	520-	2-3547	40,42,43,46-53	5-3547	43,45,46,48-53*	8-3547	48E-52E	357	12-15	*Indicates Blk Ano & Orange Ano avail in 48-53t
SM-R 510	510	2005	42	16	2.63	520-	2-3631	42,43,45,47-52					383	13-15	
SM-R 510	510	2006-10	42	15	2.80	520-110	2-3631	42,43,45,47-52					383	13-15	
TC510	510	2005	47	14	3.36	520-114	2-3631	42,43,45,47-52					383	13-15	
TC510	510	2006	50	14	3.57	520-114	2-3631	42,43,45,47-52					383	13-15	
TC510	510	2007-10	47	14	3.36	520-116	2-3631	42,43,45,47-52					383	13-15	
TE510	510	2006-10	47	13	3.62	520-116	2-3631	42,43,45,47-52					383	13-15	
TXC510	510	2009-11	47	13	3.62	520-	2-3631	42,43,45,47-52					383	13-15	

SUNSTAR

HUSQVARNA/KAWASAKI

For the complete Sunstar part numbers:

Combine the Appl code for your desired product with the number of teeth.

EXAMPLE:	APPL CODE	TEETH #	2-355943

HUSQVARNA

MODEL	OE GEARING INFO						REAR						FRONT	
HUSQVARNA	CC	Years	Rear	CS	Ratio	Chain Links	Steel Appl Code	# Teeth	Alum Appl Code	# Teeth	Works Z Appl Code	# Teeth	CS Appl Code	
TE511	511	2011-13	51	15	3.40	520-108	2-3631	42,43,45,47-52						
SM-R 570	570	2001-04	48	16	3.00	520-	2-3631	42,43,45,47-52					383	13-15
TC570	570	2001-03	52	14	3.71	520-	2-3631	42,43,45,47-52					383	13-15
TE570	570	2001-04	48	17	2.82	520-	2-3631	42,43,45,47-52					383	13-15
SM610	610	2008-09	43	15	2.87	520-112	2-3631	42,43,45,47-52					383	13-15
SM-S 610	610	2000-08	45	16	2.81	520-114	2-3631	42,43,45,47-52					383	13-15
TC610	610	1991-97	52	12	4.33	520-120	2-3631	42,43,45,47-52					383	13-15
TC610	610	1998	52	13	4.00	520-120	2-3631	42,43,45,47-52					383	13-15
TC610	610	1999-00	52	14	3.71	520-120	2-3631	42,43,45,47-52					383	13-15
TE610	610	1991-01	48	17	2.82	520-120	2-3631	42,43,45,47-52					383	13-15
TE610	610	2008-09	45	15	3.00	520-114	2-3631	42,43,45,47-52					383	13-15
TE610E	610	1999-07	45	15	3.00	520-	2-3631	42,43,45,47-52					383	13-15
TE630	630	2010-12	38	15	2.53	520-112	2-3631	42,43,45,47-52					383	13-15

KAWASAKI

MODEL	OE GEARING INFO						REAR						FRONT		
KAWASAKI	CC	Years	Rear	CS	Ratio	Chain Links	Steel Appl Code	# Teeth	Alum Appl Code	# Teeth	Works Z Appl Code	# Teeth	CS Appl Code	# Teeth	Comments / Notes
KDX50	50	2003-06	28	13	2.15	420-78	2-1006	28					101	11-14	
KX60	60	1983-03	44	13	3.38	420-104	2-1432	44					104	12-15	
KX65	65	2000-01	46	13	3.54	420-108	2-1455	47,48	5-1455	45-48			104	12-15	
KX65	65	2002-16	47	13	3.38	420-110	2-1455	47,48	5-1455	45-48			104	12-15	
KV75-A	75	1976-80	33	13	2.54	420-88							101	11-14	
MT1-75	75	1971-72	33	13	2.54	420-88							101	11-14	
MT1-75	75	1974-75	33	13	2.54	420-88							101	11-14	
AR60-A	80	1982	43	15	2.87	420-114							109	13-15	
KD80	80	1975	36	13	2.77	428-86							203	12-16	
KD80	80	1976	39	14	2.79	428-98							203	12-16	
KD80	80	1980-87	39	14	2.79	428-98							203	12-16	
KD80	80	1988-90	34	15	2.27	420-102							109	13-15	
KDX80	80	1980-83	50	14	3.57	420-110							104	12-15	
KDX80	80	1984-88	48	14	3.43	420-118	2-1432	44					104	12-15	
KSF80 KFX80	80	2003-06	22	10	2.20	520-36	2-3014	22					354	10	
KX80	80	1979-80	48	14	3.43	420-112							104	12-15	
KX80	80	1981-82	50	14	3.57	420-120							104	12-15	
KX80	80	1983	49	14	3.50	420-118	2-1432	44					104	12-15	
KX80	80	1984-85	50	14	3.57	420-118	2-1432	44					104	12-15	
KX80	80	1986-87	49	13	3.77	420-120	2-1423	48-54	5-1423	49-53			104	12-15	
KX80	80	1988	48	13	3.69	420-120	2-1423	48-54	5-1423	49-53			104	12-15	
KX80	80	1989-90	49	13	3.77	420-120	2-1423	48-54	5-1423	49-53			104	12-15	
KX80	80	1991-97	49	13	3.77	420-118	2-1423	48-54	5-1423	49-53			104	12-15	
KX80	80	1998-00	50	14	3.57	420-120	2-1423	48-54	5-1423	49-53			104	12-15	
KX85	85	2001-16	50	14	3.57	420-120	2-1423	48-54	5-1423	49-53			104	12-15	
G3SS	90	1969-75	37	14	2.64	428-106							203	12-16	
G3TR	90	1969-71	42	14	3.00	428-110							203	12-16	
MC1	90	1973-75	36	14	2.57	428-96							203	12-16	
MC1M	90	1974-75	36	14	2.57	428-96							203	12-16	
G31M Centurion	100	1970-71	50	14	3.57	428-100							203	12-16	
G5	100	1973-75	42	15	2.80	428-110							203	12-16	
KD100M	100	1976-79	36	14	2.57	428-96							203	12-16	

SUNSTAR

KAWASAKI

For the complete Sunstar part numbers:

Combine the Appl code for your desired product with the number of teeth.

EXAMPLE:	APPL CODE	TEETH #	2-355943

KAWASAKI

MODEL	OE GEARING INFO						REAR						FRONT		
KAWASAKI	CC	Years	Rear	CS	Ratio	Chain Links	Steel Appl Code	# Teeth	Alum Appl Code	# Teeth	Works Z Appl Code	# Teeth	CS Appl Code	# Teeth	Comments / Notes
KE100	100	1976-81	42	15	2.80	428-110							203	12-16	
KE100	100	1982-01	40	15	2.67	428-112							203	12-16	
KH100	100	1976-77	37	14	2.64	428-110							203	12-16	
KM100	100	1976-81	36	14	2.57	428-96							203	12-16	
KX100	100	1995-97	54	13	4.15	420-124	2-1423	48-54	5-1423	49-53			104	12-15	
KX100	100	1998-16	51	13	3.92	420-124	2-1423	48-54	5-1423	49-53			104	12-15	
KLX110	110	2002	37	14	2.64	420-88	2-1037	32-35,38					109	13-15	
KLX110	110	2003-09	33	14	2.36	420-88	2-1037	32-35,38					109	13-15	
KLX110 / L	110	2010-16	38	13	2.92	420-90	2-1037	32-35,38					109	13-15	
C2SS Roadrunner	120	1967	32	14	2.29	428-104							203	12-16	
C2TR	120	1967	32	14	2.29	428-104							203	12-16	
F6	125	1971-73	55	14	3.93	428-118							203	12-16	
KD125	125	1975-79	50	14	3.57	428-118							203	12-16	
KE125	125	1976-86	50	14	3.57	428-118							203	12-16	
KLX125	125	2003-06	51	14	3.64	428-130	2-2449	51,57					220	14,16	
KLX125-L	125	2003-06	57	14	4.07	428-134	2-2449	51,57					220	14,16	
KS125	125	1974-75	50	14	3.57	428-118							203	12-16	
KX125	125	1974-76	60	14	4.29	428-124							203	12-16	
KX125	125	1978	63	14	4.50	428-130							301	11-13	Must Use 520 Pitch Chain
KX125	125	1979	60	14	4.29	428-134							301	11-13	Must Use 520 Pitch Chain
KX125	125	1980	52	12	4.33	520-118							301	11-13	
KX125	125	1981	53	12	4.42	520-118							301	11-13	
KX125	125	1982	51	13	3.92	520-114	2-3619	42,43,47-52	5-3619	44-54*	8-3619	48E-52E	301	11-13	*indicates 48-52t Avail in Blk Ano
KX125	125	1983	50	12	4.17	520-114	2-3619	42,43,47-52	5-3619	44-54*	8-3619	48E-52E	301	11-13	*indicates 48-52t Avail in Blk Ano
KX125	125	1984	50	12	4.17	520-112							301	11-13	
KX125	125	1985-89	47	12	3.92	520-110	2-3619	42,43,47-52	5-3619	44-54*	8-3619	48E-52E	301	11-13	*indicates 48-52t Avail in Blk Ano
KX125	125	1990-91	48	12	4.00	520-112	2-3619	42,43,47-52	5-3619	44-54*	8-3619	48E-52E	301	11-13	*indicates 48-52t Avail in Blk Ano
KX125	125	1992-93	49	12	4.08	520-112	2-3619	42,43,47-52	5-3619	44-54*	8-3619	48E-52E	301	11-13	*indicates 48-52t Avail in Blk Ano
KX125	125	1994-95	49	12	4.08	520-110	2-3619	42,43,47-52	5-3619	44-54*	8-3619	48E-52E	332	11-13	*indicates 48-52t Avail in Blk Ano
KX125	125	1996-97	50	13	3.85	520-112	2-3619	42,43,47-52	5-3619	44-54*	8-3619	48E-52E	332	11-13	*indicates 48-52t Avail in Blk Ano
KX125	125	1998-99	48	12	4.00	520-112	2-3619	42,43,47-52	5-3619	44-54*	8-3619	48E-52E	332	11-13	*indicates 48-52t Avail in Blk Ano
KX125	125	2000-02	49	12	4.08	520-110	2-3619	42,43,47-52	5-3619	44-54*	8-3619	48E-52E	332	11-13	*indicates 48-52t Avail in Blk Ano
KX125	125	2003-05	51	13	3.92	520-112	2-3619	42,43,47-52	5-3619	44-54*	8-3619	48E-52E	332	11-13	*indicates 48-52t Avail in Blk Ano
KLX140	140	2008-16	50	14	3.57	428-122	2-2423	50,51					237	13,14	
KLX140-L	140	2008-16	51	13	3.92	428-126	2-2423	50,51					237	13,14	
F3 Bushwhacker	175	1968-70	39	16	2.44	428-116							203	12-16	
F7	175	1971-75	50	14	3.57	428-114							203	12-16	
KD175	175	1976-79	48	14	3.43	428-120							203	12-16	
KDX175	175	1980-82	52	12	4.33	520-118							301	11-13	
KE175	175	1976-78	48	14	3.43	428-120							203	12-16	
KE175	175	1980-83	44	14	3.14	428-116							203	12-16	
KDX200	200	1983	48	13	3.69	520-112							301	11-13	
KDX200	200	1984-85	48	13	3.69	520-112							315	10,12-17	
KDX200	200	1986-88	48	13	3.69	520-110	2-3619	42,43,47-52	5-3619	44-54*	8-3619	48E-52E	315	10,12-17	*indicates 48-52t Avail in Blk Ano
KDX200	200	1989-94	47	13	3.62	520-110	2-3619	42,43,47-52	5-3619	44-54*	8-3619	48E-52E	315	10,12-17	*indicates 48-52t Avail in Blk Ano
KDX200	200	1995-06	47	13	3.62	520-108	2-3619	42,43,47-52	5-3619	44-54*	8-3619	48E-52E	315	10,12-17	*indicates 48-52t Avail in Blk Ano
KZ200	200	1978-79	40	15	2.67	520-98							315	10,12-17	
KDX220-R	220	1997-05	47	13	3.62	520-108	2-3619	42,43,47-52	5-3619	44-54*	8-3619	48E-52E	315	10,12-17	*indicates 48-52t Avail in Blk Ano
EL250 Eliminator	250	1988-89	44	14	3.14	520-114	2-3471	41,42,45					341	14,15	
EL250 Eliminator	250	1991-93	44	14	3.14	520-114	2-3471	41,42,45					341	14,15	
EX250 Ninja 250R	250	1986-87	42	14	3.00	520-104	2-3471	41,42,45					341	14,15	
EX250 Ninja 250R	250	1988-12	45	14	3.21	520-106	2-3471	41,42,45					341	14,15	
KDX250	250	1980	50	14	3.57	520-110							317	14	
KDX250	250	1981	50	13	3.85	520-116							317	14	
KDX250	250	1982	52	14	3.71	520-118							317	14	
KDX250	250	1983-84	50	14	3.57	520-116							317	14	

SUNSTAR

KAWASAKI

For the complete Sunstar part numbers:

Combine the Appl code for your desired product with the number of teeth.

EXAMPLE:	APPL CODE	TEETH #	2-355943

KAWASAKI

MODEL	OE GEARING INFO						REAR						FRONT		
KAWASAKI	CC	Years	Rear	CS	Ratio	Chain Links	Steel Appl Code	# Teeth	Alum Appl Code	# Teeth	Works Z Appl Code	# Teeth	CS Appl Code	# Teeth	Comments / Notes
KDX250	250	1991-94	48	14	3.43	520-112	2-3619	42,43,47-52	5-3619	44-54*	8-3619	48E-52E	315	10,12-17	*indicates 48-52t Avail in Blk Ano
KE250	250	1977-79	39	14	2.79	520-98							317	14	
KL250 KLR	250	1978-79	40	14	2.86	520-96							315	10,12-17	
KL250 KLR	250	1980-82	40	14	2.86	520-96	2-3517	44					315	10,12-17	
KL250 KLR	250	1983-84	40	14	2.86	520-96	2-3517	44					315	10,12-17	
KL250 KLR	250	1985-05	44	15	2.93	520-104	2-3517	44					333	14-17	
KLX250	250	1979-80	46	14	3.29	520-108							315	10,12-17	
KLX250 KLX250R	250	1994-96	50	14	3.57	520-110	2-3619	42,43,47-52	5-3619	44-54*	8-3619	48E-52E	315	10,12-17	*indicates 48-52t Avail in Blk Ano
KLX250S	250	2006-07	42	14	3.00	520-106	2-3619	42,43,47-52	5-3619	44-54*	8-3619	48E-52E	3B1	13-15	*indicates 48-52t Avail in Blk Ano
KLX250S	250	2009-14	42	14	3.00	520-106	2-3619	42,43,47-52	5-3619	44-54*	8-3619	48E-52E	3B1	13-15	*indicates 48-52t Avail in Blk Ano
KLX250SF	250	2009-10	39	13	3.00	520-106	2-3619	42,43,47-52	5-3619	44-54*	8-3619	48E-52E	3B1	13-15	*indicates 48-52t Avail in Blk Ano
KSF250 Mojave	250	1987-03	43	12	3.58	520-90	2-3160	43					342	11-13	
KX250	250	1974-76	48	13	3.69	520-104							317	14	
KX250	250	1978	50	14	3.57	520-110							317	14	
KX250	250	1979	50	14	3.57	520-116							317	14	
KX250	250	1980	50	14	3.57	520-114							317	14	
KX250	250	1981	46	14	3.29	520-114							317	14	
KX250	250	1982	48	14	3.43	520-114	2-3619	42,43,47-52	5-3619	44-54*	8-3619	48E-52E	317	14	*indicates 48-52t Avail in Blk Ano
KX250	250	1983-84	50	14	3.57	520-114							317	14	
KX250	250	1985	50	14	3.57	520-112	2-3619	42,43,47-52	5-3619	44-54*	8-3619	48E-52E	317	14	*indicates 48-52t Avail in Blk Ano
KX250	250	1986	48	14	3.43	520-114	2-3619	42,43,47-52	5-3619	44-54*	8-3619	48E-52E	317	14	*indicates 48-52t Avail in Blk Ano
KX250	250	1987-89	47	14	3.36	520-114	2-3619	42,43,47-52	5-3619	44-54*	8-3619	48E-52E	315	10,12-17	*indicates 48-52t Avail in Blk Ano
KX250	250	1990-91	48	14	3.43	520-114	2-3619	42,43,47-52	5-3619	44-54*	8-3619	48E-52E	315	10,12-17	*indicates 48-52t Avail in Blk Ano
KX250	250	1992-96	49	14	3.50	520-112	2-3619	42,43,47-52	5-3619	44-54*	8-3619	48E-52E	315	10,12-17	*indicates 48-52t Avail in Blk Ano
KX250	250	1997	49	13	3.77	520-114	2-3619	42,43,47-52	5-3619	44-54*	8-3619	48E-52E	315	10,12-17	*indicates 48-52t Avail in Blk Ano
KX250	250	1998	48	13	3.69	520-114	2-3619	42,43,47-52	5-3619	44-54*	8-3619	48E-52E	315	10,12-17	*indicates 48-52t Avail in Blk Ano
KX250	250	1999-01	48	13	3.69	520-114	2-3619	42,43,47-52	5-3619	44-54*	8-3619	48E-52E	325	12-16	*indicates 48-52t Avail in Blk Ano
KX250	250	2002-04	49	13	3.77	520-114	2-3619	42,43,47-52	5-3619	44-54*	8-3619	48E-52E	325	12-16	*indicates 48-52t Avail in Blk Ano
KX250	250	2005-07	51	13	3.92	520-114	2-3619	42,43,47-52	5-3619	44-54*	8-3619	48E-52E	325	12-16	*indicates 48-52t Avail in Blk Ano
KX250F	250	2004-05	48	13	3.69	520-114	2-3619	42,43,47-52	5-3619	44-54*	8-3619	48E-52E	311	12-14	*indicates 48-52t Avail in Blk Ano
KX250F	250	2006-10	48	13	3.69	520-112	2-3619	42,43,47-52	5-3619	44-54*	8-3619	48E-52E	3B0	12-14	*indicates 48-52t Avail in Blk Ano
KX250F	250	2011-16	50	13	3.85	520-114	2-3619	42,43,47-52	5-3619	44-54*	8-3619	48E-52E	3B0	12-14	*indicates 48-52t Avail in Blk Ano
KXF250-A Tecate 4	250	1987-88	39	13	3.00	520-96							315	10,12-17	
KXT250-A Tecate	250	1984-85	42	13	3.23	520-90	2-3344	38,44					317	14	
KXT250-B Tecate	250	1986	37	13	2.85	520-94							317	14	
KZ250	250	1980-81	37	15	2.47	520-102							315	10,12-17	
EX300A Ninja 300	300	2013-16	42	14	3.00	520-106	2-3471	41,42,45					341	14,15	Sunstar Rear Sprocket is black color
KEF300 Lakota	300	1995-03	43	12	3.58	520-100	2-3160	43					342	11-13	
KLX300R	300	1997-02	50	14	3.57	520-110	2-3619	42,43,47-52	5-3619	44-54*	8-3619	48E-52E	315	10,12-17	*indicates 48-52t Avail in Blk Ano
KLX300R	300	2003-07	50	14	3.57	520-110	2-3619	42,43,47-52	5-3619	44-54*	8-3619	48E-52E	325	12-16	*indicates 48-52t Avail in Blk Ano
KZ305 CSR	305	1981-82	33	15	2.20	530-98	2-5166	45					511	13-18	
KDX400	400	1979	48	15	3.20	520-110							317	14	
KDX400	400	1980	50	15	3.33	520-112							317	14	
KSF400A KFX400	400	2003-06	40	14	2.86	520-112	2-3130	37,38,40,42	5-3130	40			329	13-15	
KZ400	400	1974	45	15	3.00	530-100	2-5166	45					504	15	
KZ400-A Deluxe	400	1977-78	45	15	3.00	530-100	2-5166	45					504	15	
KZ400-B	400	1978-79	45	15	3.00	530-100	2-5166	45					504	15	
KZ400-C	400	1978	45	15	3.00	530-100	2-5166	45					504	15	
KZ400-D	400	1975-77	45	15	3.00	530-100	2-5166	45					504	15	
KZ400-H LTD	400	1979	45	15	3.00	530-104	2-5166	45					504	15	
KZ400-S	400	1975-77	45	15	3.00	530-100	2-5166	45					504	15	
KDX420	420	1981	50	15	3.33	520-120							317	14	
KX420	420	1980	48	14	3.43	520-118							317	14	
KX420	420	1981	48	15	3.20	520-118							317	14	
KZ440 LTD	440	1980-83	45	15	3.00	530-104	2-5166	45					504	15	
KDX450	450	1982	50	15	3.33	520-120							317	14	

SUNSTAR

KAWASAKI

For the complete Sunstar part numbers:

Combine the Appl code for your desired product with the number of teeth.

EXAMPLE:	APPL CODE	TEETH #	2-355943

KAWASAKI

MODEL	OE GEARING INFO						REAR						FRONT		
KAWASAKI	CC	Years	Rear	CS	Ratio	Chain Links	Steel Appl Code	# Teeth	Alum Appl Code	# Teeth	Works Z Appl Code	# Teeth	CS Appl Code	# Teeth	Comments / Notes
KLX450-R	450	2008-09	50	13	3.85	520-114	2-3619	42,43,47-52	5-3619	44-54*	8-3619	48E-52E	325	12-16	*indicates 48-52t Avail in Blk Ano
KSF450B KFX450R	450	2008-14	38	14	2.71	520-94	2-3466	38,39					3A6	14,15	
KX450F	450	2006-16	50	13	3.85	520-114	2-3619	42,43,47-52	5-3619	44-54*	8-3619	48E-52E	3A1	12-14	*indicates 48-52t Avail in Blk Ano
EN500 Vulcan LTD	500	1996-09	42	16	2.63	520-110							333	14-17	
EX500 Ninja 500R	500	1994-09	41	16	2.56	520-104	2-3471	41,42,45					333	14-17	
EX500-A	500	1987-93	42	16	2.63	520-104	2-3471	41,42,45					333	14-17	
H1	500	1969-72	45	15	3.00	530-102	2-5205	42,45							
H1	500	1973-75	45	15	3.00	530-106	2-5205	42,45							
KH500	500	1976	45	15	3.00	530-106	2-5205	42,45							
KX500	500	1983	43	14	3.07	520-112	2-3619	42,43,47-52	5-3619	44-54*	8-3619	48E-52E	317	14	*indicates 48-52t Avail in Blk Ano
KX500	500	1984	46	15	3.07	520-112							317	14	
KX500	500	1985	46	14	3.29	520-112	2-3619	42,43,47-52	5-3619	44-54*	8-3619	48E-52E	317	14	*indicates 48-52t Avail in Blk Ano
KX500	500	1986	48	14	3.43	520-114	2-3619	42,43,47-52	5-3619	44-54*	8-3619	48E-52E	317	14	*indicates 48-52t Avail in Blk Ano
KX500	500	1987-04	47	14	3.36	520-114	2-3619	42,43,47-52	5-3619	44-54*	8-3619	48E-52E	315	10,12-17	*indicates 48-52t Avail in Blk Ano
KZ550	550	1980-83	40	16	2.50	530-100	2-5205	42,45					511	13-18	
KZ550 LTD	550	1980-83	38	16	2.38	530-100	2-5344	38					511	13-18	
KZ550 GPZ	550	1981	38	16	2.38	530-100	2-5344	38					511	13-18	
KZ550 GPZ	550	1982-83	38	16	2.38	530-104	2-5344	38					511	13-18	
ZR550 Zephyr	550	1990-93	41	16	2.56	520-106	2-3471	41,42,45					333	14-17	
ZX550 GPZ	550	1984-86	38	16	2.38	520-104	2-3344	38,44					333	14-17	
KL600 KLR	600	1984-86	43	15	2.87	520-104							333	14-17	
ZX600 Ninja	600	1985-87	39	15	2.60	530-102							511	13-18	
ZX600 Ninja 600R	600	1988-97	39	15	2.60	530-102							511	13-18	
ZX600 ZX-6RR	600	2003-04	40	15	2.67	520-110	2-3356	40,42-46	5-3356	38-45			397	14,15	
ZX600 ZX-6RR	600	2005-06	43	15	2.87	520-110	2-3356	40,42-46	5-3356	38-45			397	14,15	
ZX600-D ZX-6	600	1990-93	45	15	3.00	530-110	2-5501	40,42,45,46,48					511	13-18	
ZX600-E ZX-6	600	1993-01	48	16	3.00	530-112	2-5501	40,42,45,46,48					511	13-18	
ZX600-E ZZR600	600	2003-04	48	16	3.00	530-112	2-5526	39,40					511	13-18	
ZX600-F ZX-6R	600	1995-97	40	15	2.67	525-108	2-4529	38,39							
ZX600-G ZX-6R	600	1998-99	40	15	2.67	525-108	2-4350	39-43					423	15	
ZX600-G ZX-6R	600	1998-99	40	15	2.67	525-108	2-3356	40,42-46	5-3356	38-45			397	14,15	525>520 Conversion
ZX600-J ZX-6R	600	2000-02	40	15	2.67	525-108	2-4350	39-43					423	15	
ZX600-J ZX-6R	600	2000-02	40	15	2.67	525-108	2-3356	40,42-46	5-3356	38-45			397	14,15	525>520 Conversion
ZX600-J ZZR600	600	2005-08	40	15	2.67	525-108	2-4350	39-43					423	15	
ZX600-J ZZR600	600	2005-08	40	15	2.67	525-108	2-3356	40,42-46	5-3356	38-45			397	14,15	525>520 Conversion
ZX600 Ninja ZX-6R	600	2007-12	43	16	2.69	520-112	2-3356	40,42-46	5-3356	38-45			3A5	15,16	
ZX636 ZX-6R 636	636	2003-04	40	15	2.67	520-110	2-3356	40,42-46	5-3356	38-45			397	14,15	
ZX636 ZX-6R 636	636	2005-06	43	15	2.87	520-110	2-3356	40,42-46	5-3356	38-45			397	14,15	
ZX636E Ninja ZX-6R	636	2013-15	43	16	2.69	520-112	2-3356	40,42-46	5-3356	38-45			3A5	15,16	
EJ650A W650	650	2001-02	39	15	2.60	525-104	2-4529	38,39					404	14-17	
ER650 ER-6N Ninja 650R	650	2009	46	15	3.07	520-114	2-3356	40,42-46	5-3356	38-45				325	12-16
ER650 ER-6N Ninja 650R	650	2010	46	15	3.07	520-114	2-3356	40,42-46	5-3356	38-45				325	12-16
EX650A Ninja 650R	650	2006-08	46	15	3.07	520-114	2-3356	40,42-46	5-3356	38-45			325	12-16	
EX650 Ninja 650R	650	2009	45	15	3.00	520-114	2-3356	40,42-46	5-3356	38-45			325	12-16	
EX650 Ninja 650R	650	2010-16	46	15	3.07	520-114	2-3356	40,42-46	5-3356	38-45			325	12-16	
KL650 KLR	650	1987-89	43	15	2.87	520-106	2-3532	42,43,44					333	14-17	
KL650 KLR	650	1990-16	43	15	2.87	520-106	2-3532	42,43,44					359	14-16	
KL650B Tengai	650	1990-91	43	15	2.87	520-106	2-3532	42,43,44					359	14-16	
KLE650 Versys	650	2008-16	46	15	3.07	520-114	2-3356	40,42-46	5-3356	38-45			325	12-16	
KLX650 KLX650R	650	1993-96	49	14	3.50	520-110	2-3619	42,43,47-52	5-3619	44-54*	8-3619	48E-52E	359	14-16	*indicates 48-52t Avail in Blk Ano
KLX650-C	650	1993-96	43	15	2.87	520-112	2-3532	42,43,44					359	14-16	
KZ650-B	650	1977-79	42	16	2.63	530-102	2-5205	42,45					511	13-18	
KZ650-C Custom	650	1977-79	42	16	2.63	530-102	2-5344	38					511	13-18	
KZ650-D SR	650	1978-79	40	16	2.50	530-102	2-5344	38					511	13-18	
KZ650-E LTD	650	1980	41	16	2.56	530-102	2-5344	38					511	13-18	
KZ650-F	650	1980	42	16	2.63	530-102	2-5205	42,45					511	13-18	

SUNSTAR

KAWASAKI

For the complete Sunstar part numbers:

Combine the Appl code for your desired product with the number of teeth.

EXAMPLE:	APPL CODE	TEETH #	2-355943

KAWASAKI

MODEL	OE GEARING INFO						REAR						FRONT		
KAWASAKI	CC	Years	Rear	CS	Ratio	Chain Links	Steel Appl Code	# Teeth	Alum Appl Code	# Teeth	Works Z Appl Code	# Teeth	CS Appl Code	# Teeth	Comments / Notes
KZ650-H CSR	650	1981-83	33	13	2.54	630-84	2-6344	32,33,35,39,41					604	13,15	
KZ650-H CSR	650	1981-83	33	13	2.54	630-84	2-5344	38					511	13-18	630>530 Conversion
KZ700	700	1984	33	13	2.54	630-88	2-6344	32,33,35,39,41					604	13,15	
KZ700	700	1984	33	13	2.54	630-88	2-5344	38					511	13-18	630>530 Conversion
KZ750-B	750	1976-79	38	16	2.38	530-106	2-5344	38					511	13-18	
KZ750-E	750	1980-82	33	13	2.54	630-84	2-6344	32,33,35,39,41					604	13,15	
KZ750-E	750	1980-82	33	13	2.54	630-84	2-5344	38					511	13-18	630>530 Conversion
KZ750-G LTD II	750	1980	38	16	2.38	530-106	2-5344	38					511	13-18	
KZ750-H LTD	750	1980-83	32	13	2.46	630-84	2-6344	32,33,35,39,41					604	13,15	
KZ750-H LTD	750	1980-83	32	13	2.46	630-84	2-5344	38					511	13-18	630>530 Conversion
KZ750-L	750	1983	33	13	2.54	630-88	2-6344	32,33,35,39,41					604	13,15	
KZ750-L	750	1983	33	13	2.54	630-88	2-5344	38					511	13-18	630>530 Conversion
KZ750-M GPZ	750	1982	38	16	2.38	530-106	2-5344	38					511	13-18	
KZ750-R GPZ	750	1982	33	13	2.54	630-88	2-6344	32,33,35,39,41					604	13,15	
KZ750-R GPZ	750	1982	33	13	2.54	630-88	2-5344	38					511	13-18	630>530 Conversion
ZR750 ZR-7S	750	2001-03	38	16	2.38	525-106	2-4529	38,39					404	14-17	
ZR750-C Zephyr	750	1991-93	39	15	2.60	525-106	2-4529	38,39					404	14-17	
ZR750F2 ZR-7	750	2000	38	16	2.38	525-106	2-4529	38,39					404	14-17	
ZR750-K Z750-S	750	2005-06	43	15	2.87	520-112	2-3356	40,42-46	5-3356	38-45			3A2	15	
ZX750-A GPZ	750	1983-85	38	15	2.53	630-94	2-6344	32,33,35,39,41							
ZX750-E Turbo	750	1984-85	46	15	3.07	630-98	2-6344	32,33,35,39,41					604	13,15	
ZX750-E Turbo	750	1984-85	46	15	3.07	630-98	2-5344	38					511	13-18	630>530 Conversion
ZX750-F Ninja 750R	750	1987-90	47	16	2.94	530-110	2-5655	45,50					511	13-18	
ZX750-H Ninja 7X-7	750	1989	46	16	2.88	530-112	2-5501	40,42,45,46,48					511	13-18	
ZX750-H Ninja 7X-7	750	1990	46	16	2.88	530-110	2-5353	41,42,44,45,46					511	13-18	
ZX750-J Ninja ZX-7	750	1991-92	45	16	2.81	530-110	2-5353	41,42,44,45,46					511	13-18	
ZX750-K Ninja ZX-7R	750	1991-92	42	16	2.63	530-108	2-5353	41,42,44,45,46					511	13-18	
ZX750-L Ninja ZX-7	750	1993-95	44	16	2.75	530-110	2-5353	41,42,44,45,46					511	13-18	
ZX750-M Ninja ZX-7R	750	1993-94	41	16	2.56	530-108	2-5353	41,42,44,45,46					511	13-18	
ZX750-N Ninja ZX-7RR	750	1996-97	42	16	2.63	525-108	2-4350	39-43					404	14-17	
ZX750-N Ninja ZX-7RR	750	1996-97	42	16	2.63	525-108	2-3356	40,42-46	5-3356	38-45			396	16,17	525>520 Conversion
ZX750-P Ninja ZX-7R	750	1996-03	43	16	2.69	525-110	2-4350	39-43					404	14-17	
ZX750-P Ninja ZX-7R	750	1996-03	43	16	2.69	525-110	2-3356	40,42-46	5-3356	38-45			396	16,17	525>520 Conversion
VN800A Vulcan	800	1995-96	46	16	2.88	530-114	2-5501	40,42,45,46,48					511	13-18	
VN800A Vulcan	800	1997-05	42	17	2.47	530-114	2-5501	40,42,45,46,48					511	13-18	
VN800B Vulcan Classic	800	1996-04	42	17	2.47	530-112	2-5501	40,42,45,46,48					511	13-18	
VN800E Vulcan Drifter	800	2000-06	40	17	2.35	530-112	2-5501	40,42,45,46,48					511	13-18	
KZ900-A	900	1976-77	35	15	2.33	630-92	2-6413	35					605	15	
KZ900-B	900	1976	35	15	2.33	630-92							605	15	
Z1	900	1973-75	35	15	2.33	630-92	2-6413	35					605	15	
ZX900-A Ninja	900	1984-86	50	17	2.94	530-114	2-5655	45,50					516	16-18	
ZX900-B Ninja ZX-9R	900	1994-97	44	16	2.75	530-112	2-5353	41,42,44,45,46					511	13-18	
ZX900-C Ninja ZX-9R	900	1998-99	41	16	2.56	530-110	2-5353	41,42,44,45,46					511	13-18	
ZX900-E Ninja ZX-9R	900	2000-01	41	16	2.56	530-110	2-5353	41,42,44,45,46					511	13-18	
ZX900-F ZX-9R	900	2002-03	41	16	2.56	525-110	2-4350	39-43					428	16	
KZ1000	1000	1977	33	15	2.20	630-92	2-6344	32,33,35,39,41					605	15	
KZ1000	1000	1977	33	15	2.20	630-92	2-5344	38					519	15-17	630>530 Conversion
KZ1000	1000	1978-80	35	15	2.33	630-92	2-6344	32,33,35,39,41					605	15	
KZ1000	1000	1978-80	35	15	2.33	630-92	2-5344	38					519	15-17	630>530 Conversion
KZ1000-B LTD	1000	1977-80	33	15	2.20	630-92	2-6344	32,33,35,39,41					605	15	
KZ1000-B LTD	1000	1977-80	33	15	2.20	630-92	2-5344	38					519	15-17	630>530 Conversion
KZ1000-C Police	1000	1978-79	37	15	2.47	630-94	2-6344	32,33,35,39,41					605	15	
KZ1000-C Police	1000	1978-79	37	15	2.47	630-94	2-5344	38					519	15-17	630>530 Conversion
KZ1000-C Police	1000	1980-81	35	15	2.33	630-92	2-6344	32,33,35,39,41					605	15	
KZ1000-C Police	1000	1980-81	35	15	2.33	630-92	2-5344	38					519	15-17	630>530 Conversion
KZ1000-D Z1-R	1000	1978	33	15	2.20	630-92	2-6344	32,33,35,39,41					605	15	

SUNSTAR

KAWASAKI/KTM

For the complete Sunstar part numbers:

Combine the Appl code for your desired product with the number of teeth.

EXAMPLE:	APPL CODE	TEETH #	2-355943

KAWASAKI

MODEL	OE GEARING INFO						REAR						FRONT		
KAWASAKI	CC	Years	Rear	CS	Ratio	Chain Links	Steel Appl Code	# Teeth	Alum Appl Code	# Teeth	Works Z Appl Code	# Teeth	CS Appl Code	# Teeth	Comments / Notes
KZ1000-D Z1-R	1000	1978	33	15	2.20	630-92	2-5344	38					519	15-17	630>530 Conversion
KZ1000-D Z1-R	1000	1980	35	15	2.33	630-92	2-6344	32,33,35,39,41					605	15	
KZ1000-D Z1-R	1000	1980	35	15	2.33	630-92	2-5344	38					519	15-17	630>530 Conversion
KZ1000-G Classic	1000	1980	33	15	2.20	630-92	2-6344	32,33,35,39,41					605	15	
KZ1000-G Classic	1000	1980	33	15	2.20	630-92	2-5344	38					519	15-17	630>530 Conversion
KZ1000-J	1000	1981-83	41	15	2.73	630-96	2-6344	32,33,35,39,41					606	15	
KZ1000-K LTD	1000	1981-82	39	15	2.60	630-96	2-6344	32,33,35,39,41					606	15	
KZ1000-M LTD	1000	1981-82	39	15	2.60	630-96	2-6344	32,33,35,39,41					606	15	
KZ1000-P Police	1000	1988-90	41	15	2.73	630-96	2-6344	32,33,35,39,41					606	15	
KZ1000-P Police	1000	1992-01	41	15	2.73	630-98	2-6344	32,33,35,39,41					606	15	
KZ1000-P21-24 Police	1000	2002-05	46	15	3.07	530-116	2-5353	41,42,44,45,46							
KZ1000-R Replica	1000	1982-83	41	15	2.73	630-98	2-6344	32,33,35,39,41					606	15	
VERSYS 1000 LT	1000	2015-16	43	15	2.87	525-116	2-4350	39-43					431	15	
ZR1000-A Z1000	1000	2003-06	42	16	2.63	525-112	2-4350	39-43					428	16	
ZR1000B Z1000	1000	2007-08	40	15	2.67	525-110	2-4350	39-43					431	15	
ZR1000D Z1000	1000	2010-13	42	15	2.80	525-112	2-4350	39-43					431	15	
ZR1000G Z1000	1000	2014-16	43	15	2.87	525-112	2-4350	39-43					431	15	
ZX1000-B Ninja ZX-10	1000	1988-90	45	17	2.65	532-110	2-5655	45,50					521	17	532>530 Conversion
ZX1000C Ninja ZX-10R	1000	2004-05	39	17	2.29	525-110	2-4350	39-43					404	14-17	
ZX1000C Ninja ZX-10R	1000	2004-05	39	17	2.29	525-110	2-3356	40,42-46	5-3356	38-45			396	16,17	525>520 Conversion
ZX1000D Ninja ZX-10R	1000	2006-07	40	17	2.35	525-108	2-4350	39-43					404	14-17	
ZX1000D Ninja ZX-10R	1000	2006-07	40	17	2.35	525-108	2-3356	40,42-46	5-3356	38-45			396	16,17	525>520 Conversion
ZX1000E Ninja ZX-10R	1000	2008-10	41	17	2.41	525-110	2-4350	39-43					404	14-17	
ZX1000E Ninja ZX-10R	1000	2008-10	41	17	2.41	525-110	2-3356	40,42-46	5-3356	38-45			396	16,17	525>520 Conversion
ZX1000 Ninja 1000	1000	2011-16	41	15	2.73	525-112	2-4350	39-43					431	15	
ZX1000J Ninja ZX-10R	1000	2011-15	39	17	2.29	525-112	2-4350	39-43					404	14-17	
ZX1000J Ninja ZX-10R	1000	2016	39	17	2.29	525-114	2-4350	39,43					404	14-17	
ZX1000J Ninja ZX-10R	1000	2011-15	39	17	2.29	525-112	2-3356	40,42-46	5-3356	38-45			396	16,17	525>520 Conversion
ZX1000J Ninja ZX-10R	1000	2016	39	17	2.29	525-114	2-3356	40,42-46	5-3356	38-45			396	16,17	525>520 Conversion
KZ1100-B GPZ	1100	1981-82	41	15	2.73	630-98	2-6344	32,33,35,39,41					606	15	
ZR1100A Zephyr	1100	1992-95	48	16	3.00	530-116	2-5655	45,50					516	16-18	
ZR1100C ZRX1100	1100	1999-00	45	17	2.65	530-110	2-5655	45,50					556	16,17	
ZX1100-A GPZ	1100	1983-84	41	15	2.73	630-100	2-6344	32,33,35,39,41							
ZX1100-C Ninja ZX-11	1100	1990-93	45	17	2.65	530-110	2-5655	45,50							
ZX1100-D Ninja ZX-11	1100	1993-01	45	17	2.65	530-110	2-5655	45,50					516	16-18	
ZX1100-E GPZ 1100	1100	1995-97	45	17	2.65	530-112	2-5655	45,50					556	16,17	
ZX1100-F GPZ ABS	1100	1996	45	17	2.65	530-112	2-5655	45,50					556	16,17	
ZR1200A ZRX1200R	1200	2001-05	42	17	2.47	530-114	2-5353	41,42,44,45,46					556	16,17	
ZX1200-A ZX-12R	1200	2000-01	46	18	2.55	530-116	2-5353	41,42,44,45,46					516	16-18	
ZX1200-B ZX-12R	1200	2002-03	46	18	2.55	530-116	2-5353	41,42,44,45,46					516	16-18	
ZX1200-B ZX-12R	1200	2004-05	46	18	2.55	530-116	2-5353	41,42,44,45,46					516	16-18	
ZX1200-C ZZR1200	1200	2002-05	44	17	2.58	530-114	2-5353	41,42,44,45,46					516	16-18	
ZX1400 Ninja ZX-14R	1400	2006-11	41	17	2.41	530-116	2-5405	41,42					516	16-18	
ZX1400 Ninja ZX-14R	1400	2012-16	42	17	2.47	530-118	2-5405	41,42					516	16-18	

KTM

MODEL	OE GEARING INFO						REAR						FRONT		
KTM	CC	Years	Rear	CS	Ratio	Chain Links	Steel Appl Code	# Teeth	Alum Appl Code	# Teeth	Works Z Appl Code	# Teeth	CS Appl Code	# Teeth	Comments / Notes
65 SX	65	1998-10	50	14	3.57	420-118	2-1390	48-51	5-1390	46,47-48*,50*,5			110	13,14	*Indicates Avail in Orange Ano
65 SX	65	2011-16	48	14	3.43	420-112	2-1390	48-51	5-1390	46,47-48*,50*,5			110	13,14	*Indicates Avail in Orange Ano
65 SXS	65	2015	47	14	3.36	420-	2-1390	48-51	5-1390	46,47-48*,50*,5			110	13,14	*Indicates Avail in Orange Ano
65 XC	65	2008-09	50	14	3.57	420-118	2-1390	48-51	5-1390	46,47-48*,50*,5			110	13,14	*Indicates Avail in Orange Ano
85 SX (17/14)	85	2003-16	46	14	3.29	428-124	2-2481	47,49,51	5-2481	46-51*			233	13,14	*Indicates Avail in Orange Ano
85 SX (19/16)	85	2004-14	49	14	3.50	428-124	2-2481	47,49,51	5-2481	46-51*			233	13,14	*Indicates Avail in Orange Ano in 47-51t
85 SXS	85	2015	46	14	3.29	428-124	2-2481	47,49,51	5-2481	46-51*			233	13,14	*Indicates Avail in Orange Ano in 47-51t
85 XC	85	2008-09	51	14	3.64	428-	2-2481	47,49,51	5-2481	46-51*			233	13,14	*Indicates Avail in Orange Ano in 47-51t

SUNSTAR

KTM

For the complete Sunstar part numbers:

Combine the Appl code for your desired product with the number of teeth.

EXAMPLE:	APPL CODE	TEETH #	2-355943

KTM

MODEL	OE GEARING INFO						REAR						FRONT		
KTM	CC	Years	Rear	CS	Ratio	Chain Links	Steel Appl Code	# Teeth	Alum Appl Code	# Teeth	Works Z Appl Code	# Teeth	CS Appl Code	# Teeth	Comments / Notes
105 SX	105	2004-11	49	14	3.50	428-124	2-2481	47,49,51	5-2481	46-51*			233	13,14	*indicates Avail in Orange Ano in 47-51t
105 XC	105	2008-09	49	14	3.50	428-	2-2481	47,49,51	5-2481	46-51*			233	13,14	*indicates Avail in Orange Ano in 47-51t
125 DXC	125	1990				520-							357	12-15	
125 DXC	125	1991-92				520-	2-3547	40,42,43,46-53	5-3547	43,45-46,48-53*	8-3547	48E-52E	357	12-15	*indicates Blk Ano & Orange Ano avail in 48-53t
125 EGS	125	1990				520-							357	12-15	
125 EGS	125	1992-99	45	13	3.46	520-118	2-3547	40,42,43,46-53	5-3547	43,45-46,48-53*	8-3547	48E-52E	357	12-15	*indicates Blk Ano & Orange Ano avail in 48-53t
125 EXC	125	1989-90	48	13	3.69	520-							357	12-15	
125 EXC	125	1991-01	50	13	3.85	520-118	2-3547	40,42,43,46-53	5-3547	43,45-46,48-53*	8-3547	48E-52E	357	12-15	*indicates Blk Ano & Orange Ano avail in 48-53t
125 EXC	125	2015	50	14	3.57	520-	2-3547	40,42,43,46-53	5-3547	43,45-46,48-53*	8-3547	48E-52E	357	12-15	*indicates Blk Ano & Orange Ano avail in 48-53t
125 MX	125	1987-90				520-							357	12-15	
125 MX	125	1991	52	13	4.00	520-	2-3547	40,42,43,46-53	5-3547	43,45-46,48-53*	8-3547	48E-52E	357	12-15	*indicates Blk Ano & Orange Ano avail in 48-53t
125 MX	125	1992	50	13	3.85	520-	2-3547	40,42,43,46-53	5-3547	43,45-46,48-53*	8-3547	48E-52E	357	12-15	*indicates Blk Ano & Orange Ano avail in 48-53t
125 MXC	125	1987-88				520-							357	12-15	
125 SX	125	1993-16	50	13	3.85	520-118	2-3547	40,42,43,46-53	5-3547	43,45-46,48-53*	8-3547	48E-52E	357	12-15	*indicates Blk Ano & Orange Ano avail in 48-53t
125 SXS	125	2001-02				520-	2-3547	40,42,43,46-53	5-3547	43,45-46,48-53*	8-3547	48E-52E	357	12-15	*indicates Blk Ano & Orange Ano avail in 48-53t
144 SX	144	2007-08	50	14	3.57	520-	2-3547	40,42,43,46-53	5-3547	43,45-46,48-53*	8-3547	48E-52E	357	12-15	*indicates Blk Ano & Orange Ano avail in 48-53t
150 SX	150	2009-15	48	13	3.69	520-118	2-3547	40,42,43,46-53	5-3547	43,45-46,48-53*	8-3547	48E-52E	357	12-15	*indicates Blk Ano & Orange Ano avail in 48-53t
150 XC	150	2010-14	50	13	3.85	520-118	2-3547	40,42,43,46-53	5-3547	43,45-46,48-53*	8-3547	48E-52E	357	12-15	*indicates Blk Ano & Orange Ano avail in 48-53t
200 EXC	200	1999-05	48	14	3.43	520-	2-3547	40,42,43,46-53	5-3547	43,45-46,48-53*	8-3547	48E-52E	357	12-15	*indicates Blk Ano & Orange Ano avail in 48-53t
200 EXC	200	2015	45	14	3.21	520-	2-3547	40,42,43,46-53	5-3547	43,45-46,48-53*	8-3547	48E-52E	357	12-15	*indicates Blk Ano & Orange Ano avail in 48-53t
200 MXC	200	1998-03	50	14	3.57	520-118	2-3547	40,42,43,46-53	5-3547	43,45-46,48-53*	8-3547	48E-52E	357	12-15	*indicates Blk Ano & Orange Ano avail in 48-53t
200 SX	200	2003-04	45	14	3.21	520-	2-3547	40,42,43,46-53	5-3547	43,45-46,48-53*	8-3547	48E-52E	357	12-15	*indicates Blk Ano & Orange Ano avail in 48-53t
200 XC	200	2006-10	48	14	3.43	520-	2-3547	40,42,43,46-53	5-3547	43,45-46,48-53*	8-3547	48E-52E	357	12-15	*indicates Blk Ano & Orange Ano avail in 48-53t
200 XC-W	200	2006-16	48	14	3.43	520-118	2-3547	40,42,43,46-53	5-3547	43,45-46,48-53*	8-3547	48E-52E	357	12-15	*indicates Blk Ano & Orange Ano avail in 48-53t
250 DXC	250	1990-92	50	15	3.33	520-	2-3547	40,42,43,46-53	5-3547	43,45-46,48-53*	8-3547	48E-52E	357	12-15	*indicates Blk Ano & Orange Ano avail in 48-53t
250 EGS	250	1990-99	48	15	3.20	520-	2-3547	40,42,43,46-53	5-3547	43,45-46,48-53*	8-3547	48E-52E	357	12-15	*indicates Blk Ano & Orange Ano avail in 48-53t
250 EXC	250	1990-93	50	14	3.57	520-	2-3547	40,42,43,46-53	5-3547	43,45-46,48-53*	8-3547	48E-52E	357	12-15	*indicates Blk Ano & Orange Ano avail in 48-53t
250 EXC	250	1994	52	14	3.71	520-118	2-3547	40,42,43,46-53	5-3547	43,45-46,48-53*	8-3547	48E-52E	357	12-15	*indicates Blk Ano & Orange Ano avail in 48-53t
250 EXC	250	1995	50	13	3.85	520-	2-3547	40,42,43,46-53	5-3547	43,45-46,48-53*	8-3547	48E-52E	357	12-15	*indicates Blk Ano & Orange Ano avail in 48-53t
250 EXC	250	1996-01	52	14	3.71	520-118	2-3547	40,42,43,46-53	5-3547	43,45-46,48-53*	8-3547	48E-52E	357	12-15	*indicates Blk Ano & Orange Ano avail in 48-53t
250 EXC	250	2002-05	50	13	3.85	520-	2-3547	40,42,43,46-53	5-3547	43,45-46,48-53*	8-3547	48E-52E	357	12-15	*indicates Blk Ano & Orange Ano avail in 48-53t
250 EXC	250	2015	50	14	3.57	520-	2-3547	40,42,43,46-53	5-3547	43,45-46,48-53*	8-3547	48E-52E	357	12-15	*indicates Blk Ano & Orange Ano avail in 48-53t
250 EXC-F	250	2015	52	14	3.71	520-	2-3547	40,42,43,46-53	5-3547	43,45-46,48-53*	8-3547	48E-52E	357	12-15	*indicates Blk Ano & Orange Ano avail in 48-53t
250 EXC-G	250	2004-05	45	15	3.00	520-	2-3547	40,42,43,46-53	5-3547	43,45-46,48-53*	8-3547	48E-52E	357	12-15	*indicates Blk Ano & Orange Ano avail in 48-53t
250 MX	250	1983-89				520-							357	12-15	
250 MX	250	1990-92	50	14	3.58	520-116	2-3547	40,42,43,46-53	5-3547	43,45-46,48-53*	8-3547	48E-52E	357	12-15	*indicates Blk Ano & Orange Ano avail in 48-53t
250 MXC	250	1983-88				520-							357	12-15	
250 MXC	250	1998-01	52	14	3.57	520-116	2-3547	40,42,43,46-53	5-3547	43,45-46,48-53*	8-3547	48E-52E	357	12-15	*indicates Blk Ano & Orange Ano avail in 48-53t
250 SX	250	1993-16	48	13	3.69	520-118	2-3547	40,42,43,46-53	5-3547	43,45-46,48-53*	8-3547	48E-52E	357	12-15	*indicates Blk Ano & Orange Ano avail in 48-53t
250 SX-F	250	2005-12	48	13	3.69	520-	2-3547	40,42,43,46-53	5-3547	43,45-46,48-53*	8-3547	48E-52E	357	12-15	*indicates Blk Ano & Orange Ano avail in 48-53t
250 SX-F	250	2013-16	50	13	3.85	520-118	2-3547	40,42,43,46-53	5-3547	43,45-46,48-53*	8-3547	48E-52E	357	12-15	*indicates Blk Ano & Orange Ano avail in 48-53t
250 SXS	250	2003-07				520-	2-3547	40,42,43,46-53	5-3547	43,45-46,48-53*	8-3547	48E-52E	357	12-15	*indicates Blk Ano & Orange Ano avail in 48-53t
250 SXS-F	250	2006-07				520-	2-3547	40,42,43,46-53	5-3547	43,45-46,48-53*	8-3547	48E-52E	357	12-15	*indicates Blk Ano & Orange Ano avail in 48-53t
250 XC	250	2006-16	50	14	3.58	520-118	2-3547	40,42,43,46-53	5-3547	43,45-46,48-53*	8-3547	48E-52E	357	12-15	*indicates Blk Ano & Orange Ano avail in 48-53t
250 XCF	250	2007-16	50	13	3.85	520-118	2-3547	40,42,43,46-53	5-3547	43,45-46,48-53*	8-3547	48E-52E	357	12-15	*indicates Blk Ano & Orange Ano avail in 48-53t
250 XCF-W	250	2006-13	50	13	3.85	520-118	2-3547	40,42,43,46-53	5-3547	43,45-46,48-53*	8-3547	48E-52E	357	12-15	*indicates Blk Ano & Orange Ano avail in 48-53t
250 XCF-W	250	2014-16	52	13	4.00	520-118	2-3547	40,42,43,46-53	5-3547	43,45-46,48-53*	8-3547	48E-52E	357	12-15	*indicates Blk Ano & Orange Ano avail in 48-53t
250 XC-W	250	2006-14	50	14	3.85	520-118	2-3547	40,42,43,46-53	5-3547	43,45-46,48-53*	8-3547	48E-52E	357	12-15	*indicates Blk Ano & Orange Ano avail in 48-53t
250 XC-W	250	2015-16	50	13	3.85	520-118	2-3547	40,42,43,46-53	5-3547	43,45-46,48-53*	8-3547	48E-52E	357	12-15	*indicates Blk Ano & Orange Ano avail in 48-53t
300 DXC	300	1990-92	50	15	3.33	520-	2-3547	40,42,43,46-53	5-3547	43,45-46,48-53*	8-3547	48E-52E	357	12-15	*indicates Blk Ano & Orange Ano avail in 48-53t
300 EGS	300	1990-98	48	15	3.20	520-	2-3547	40,42,43,46-53	5-3547	43,45-46,48-53*	8-3547	48E-52E	357	12-15	*indicates Blk Ano & Orange Ano avail in 48-53t
300 EXC	300	1995-97	50	14	3.57	520-	2-3547	40,42,43,46-53	5-3547	43,45-46,48-53*	8-3547	48E-52E	357	12-15	*indicates Blk Ano & Orange Ano avail in 48-53t
300 EXC	300	1998	52	14	3.71	520-	2-3547	40,42,43,46-53	5-3547	43,45-46,48-53*	8-3547	48E-52E	357	12-15	*indicates Blk Ano & Orange Ano avail in 48-53t
300 EXC	300	1999	50	14	3.57	520-	2-3547	40,42,43,46-53	5-3547	43,45-46,48-53*	8-3547	48E-52E	357	12-15	*indicates Blk Ano & Orange Ano avail in 48-53t
300 EXC	300	2000-03	52	14	3.71	520-	2-3547	40,42,43,46-53	5-3547	43,45-46,48-53*	8-3547	48E-52E	357	12-15	*indicates Blk Ano & Orange Ano avail in 48-53t
300 EXC	300	2004	42	13	3.23	520-	2-3547	40,42,43,46-53	5-3547	43,45-46,48-53*	8-3547	48E-52E	357	12-15	*indicates Blk Ano & Orange Ano avail in 48-53t

SUNSTAR

KTM

For the complete Sunstar part numbers:

Combine the Appl code for your desired product with the number of teeth.

EXAMPLE:	APPL CODE	TEETH #	2-355943

KTM

MODEL	OE GEARING INFO						REAR						FRONT		
KTM	CC	Years	Rear	CS	Ratio	Chain Links	Steel Appl Code	# Teeth	Alum Appl Code	# Teeth	Works Z Appl Code	# Teeth	CS Appl Code	# Teeth	Comments / Notes
300 EXC	300	2005	50	13	3.85	520-	2-3547	40,42,43,46-53	5-3547	43,45-46,48-53*	8-3547	48E-52E	357	12-15	*indicates Blk Ano & Orange Ano avail in 48-53t
300 EXC	300	2015	50	14	3.57	520-	2-3547	40,42,43,46-53	5-3547	43,45-46,48-53*	8-3547	48E-52E	357	12-15	*indicates Blk Ano & Orange Ano avail in 48-53t
300 MX	300	1990-92	50	14	3.57	520-118	2-3547	40,42,43,46-53	5-3547	43,45-46,48-53*	8-3547	48E-52E	357	12-15	*indicates Blk Ano & Orange Ano avail in 48-53t
300 MXC	300	1993-02	50	14	3.57	520-	2-3547	40,42,43,46-53	5-3547	43,45-46,48-53*	8-3547	48E-52E	357	12-15	*indicates Blk Ano & Orange Ano avail in 48-53t
300 MXC	300	2003-05	50	13	3.85	520-	2-3547	40,42,43,46-53	5-3547	43,45-46,48-53*	8-3547	48E-52E	357	12-15	*indicates Blk Ano & Orange Ano avail in 48-53t
300 SX	300	1993-94	52	14	3.71	520-116	2-3547	40,42,43,46-53	5-3547	43,45-46,48-53*	8-3547	48E-52E	357	12-15	*indicates Blk Ano & Orange Ano avail in 48-53t
300 TXC	300	1991-92	50	14	3.57	520-116	2-3547	40,42,43,46-53	5-3547	43,45-46,48-53*	8-3547	48E-52E	357	12-15	*indicates Blk Ano & Orange Ano avail in 48-53t
300 XC	300	2006-16	50	13	3.85	520-118	2-3547	40,42,43,46-53	5-3547	43,45-46,48-53*	8-3547	48E-52E	357	12-15	*indicates Blk Ano & Orange Ano avail in 48-53t
300 XC-W	300	2006-15	50	14	3.57	520-118	2-3547	40,42,43,46-53	5-3547	43,45-46,48-53*	8-3547	48E-52E	357	12-15	*indicates Blk Ano & Orange Ano avail in 48-53t
350 EXC-F	350	2013-15	45	14	3.21	520-118	2-3547	40,42,43,46-53	5-3547	43,45-46,48-53*	8-3547	48E-52E	357	12-15	*indicates Blk Ano & Orange Ano avail in 48-53t
350 EXC-F	350	2016	52	14	3.71	520-118	2-3547	40,42,43,46-53	5-3547	43,45-46,48-53*	8-3547	48E-52E	357	12-15	*indicates Blk Ano & Orange Ano avail in 48-53t
350 MX	350	1985-90				520-							357	12-15	
350 MXC	350	1985-88				520-							357	12-15	
350 SX-F	350	2011-16	50	14	3.57	520-118	2-3547	40,42,43,46-53	5-3547	43,45-46,48-53*	8-3547	48E-52E	357	12-15	*indicates Blk Ano & Orange Ano avail in 48-53t
350 XC-F	350	2012-16	50	13	3.85	520-118	2-3547	40,42,43,46-53	5-3547	43,45-46,48-53*	8-3547	48E-52E	357	12-15	*indicates Blk Ano & Orange Ano avail in 48-53t
350 XC-FW	350	2012-16	52	13	4.00	520-118	2-3547	40,42,43,46-53	5-3547	43,45-46,48-53*	8-3547	48E-52E	357	12-15	*indicates Blk Ano & Orange Ano avail in 48-53t
360 EGS	360	1996-97	40	15	2.67	520-118	2-3547	40,42,43,46-53	5-3547	43,45-46,48-53*	8-3547	48E-52E	357	12-15	*indicates Blk Ano & Orange Ano avail in 48-53t
360 EXC	360	1996-97				520-	2-3547	40,42,43,46-53	5-3547	43,45-46,48-53*	8-3547	48E-52E	357	12-15	*indicates Blk Ano & Orange Ano avail in 48-53t
360 MXC	360	1996-97	52	14	3.71	520-118	2-3547	40,42,43,46-53	5-3547	43,45-46,48-53*	8-3547	48E-52E	357	12-15	*indicates Blk Ano & Orange Ano avail in 48-53t
360 SX	360	1996-97	50	14	3.57	520-118	2-3547	40,42,43,46-53	5-3547	43,45-46,48-53*	8-3547	48E-52E	357	12-15	*indicates Blk Ano & Orange Ano avail in 48-53t
380 EXC	380	1998-02	52	14	3.71	520-118	2-3547	40,42,43,46-53	5-3547	43,45-46,48-53*	8-3547	48E-52E	357	12-15	*indicates Blk Ano & Orange Ano avail in 48-53t
380 MXC	380	1998-01	52	14	3.71	520-118	2-3547	40,42,43,46-53	5-3547	43,45-46,48-53*	8-3547	48E-52E	357	12-15	*indicates Blk Ano & Orange Ano avail in 48-53t
380 SX	380	1998-02	50	14	3.57	520-118	2-3547	40,42,43,46-53	5-3547	43,45-46,48-53*	8-3547	48E-52E	357	12-15	*indicates Blk Ano & Orange Ano avail in 48-53t
400 Duke	400	1995	42	16	2.63	520-	2-3547	40,42,43,46-53	5-3547	43,45-46,48-53*	8-3547	48E-52E	360	14,15	*indicates Blk Ano & Orange Ano avail in 48-53t
400 EGS	400	1994-97	50	15	3.33	520-118	2-3547	40,42,43,46-53	5-3547	43,45-46,48-53*	8-3547	48E-52E	360	14,15	*indicates Blk Ano & Orange Ano avail in 48-53t
400 EXC	400	2000-03	51	14	3.64	520-	2-3547	40,42,43,46-53	5-3547	43,45-46,48-53*	8-3547	48E-52E	357	12-15	*indicates Blk Ano & Orange Ano avail in 48-53t
400 EXC-G	400	2004-06	50	14	3.57	520-	2-3547	40,42,43,46-53	5-3547	43,45-46,48-53*	8-3547	48E-52E	357	12-15	*indicates Blk Ano & Orange Ano avail in 48-53t
400 MXC-R	400	2001-02	50	14	3.57	520-118	2-3547	40,42,43,46-53	5-3547	43,45-46,48-53*	8-3547	48E-52E	357	12-15	*indicates Blk Ano & Orange Ano avail in 48-53t
400 RXC	400	1994-98	45	16	2.81	520-118	2-3547	40,42,43,46-53	5-3547	43,45-46,48-53*	8-3547	48E-52E	360	14,15	*indicates Blk Ano & Orange Ano avail in 48-53t
400 SX	400	1998	50	14	3.57	520-118	2-3547	40,42,43,46-53	5-3547	43,45-46,48-53*	8-3547	48E-52E	360	14,15	*indicates Blk Ano & Orange Ano avail in 48-53t
400 SX	400	2000-02	50	14	3.57	520-	2-3547	40,42,43,46-53	5-3547	43,45-46,48-53*	8-3547	48E-52E	357	12-15	*indicates Blk Ano & Orange Ano avail in 48-53t
400 XC-W	400	2007-10	50	14	3.57	520-	2-3547	40,42,43,46-53	5-3547	43,45-46,48-53*	8-3547	48E-52E	357	12-15	*indicates Blk Ano & Orange Ano avail in 48-53t
440 EXC	440	1994-95	48	14	3.43	520-118	2-3547	40,42,43,46-53	5-3547	43,45-46,48-53*	8-3547	48E-52E	357	12-15	*indicates Blk Ano & Orange Ano avail in 48-53t
440 MXC	440	1994-95				520-	2-3547	40,42,43,46-53	5-3547	43,45-46,48-53*	8-3547	48E-52E	357	12-15	*indicates Blk Ano & Orange Ano avail in 48-53t
440 SX	440	1994	50	13	3.85	520-118	2-3547	40,42,43,46-53	5-3547	43,45-46,48-53*	8-3547	48E-52E	357	12-15	*indicates Blk Ano & Orange Ano avail in 48-53t
450 EXC-G	450	2003-06	51	14	3.64	520-118	2-3547	40,42,43,46-53	5-3547	43,45-46,48-53*	8-3547	48E-52E	357	12-15	*indicates Blk Ano & Orange Ano avail in 48-53t
450 EXC-R	450	2008	45	15	3.00	520-	2-3547	40,42,43,46-53	5-3547	43,45-46,48-53*	8-3547	48E-52E	357	12-15	*indicates Blk Ano & Orange Ano avail in 48-53t
450 EXC	450	2009-11	45	15	3.00	520-118	2-3547	40,42,43,46-53	5-3547	43,45-46,48-53*	8-3547	48E-52E	357	12-15	*indicates Blk Ano & Orange Ano avail in 48-53t
450 EXC	450	2015	52	14	3.71	520-	2-3547	40,42,43,46-53	5-3547	43,45-46,48-53*	8-3547	48E-52E	357	12-15	*indicates Blk Ano & Orange Ano avail in 48-53t
450 MXC-G	450	2003-05	50	14	3.57	520-118	2-3547	40,42,43,46-53	5-3547	43,45-46,48-53*	8-3547	48E-52E	357	12-15	*indicates Blk Ano & Orange Ano avail in 48-53t
450 SMR	450	2004-07	45	14	3.21	520-	2-3547	40,42,43,46-53	5-3547	43,45-46,48-53*	8-3547	48E-52E	357	12-15	*indicates Blk Ano & Orange Ano avail in 48-53t
450 SMR	450	2008-12	48	14	3.43	520-118	2-3547	40,42,43,46-53	5-3547	43,45-46,48-53*	8-3547	48E-52E	357	12-15	*indicates Blk Ano & Orange Ano avail in 48-53t
450 SX ATV	450	2009	38	14	2.71	520-							357	12-15	
450 SX	450	2003	50	14	3.57	520-	2-3547	40,42,43,46-53	5-3547	43,45-46,48-53*	8-3547	48E-52E	357	12-15	*indicates Blk Ano & Orange Ano avail in 48-53t
450 SX	450	2004-06	52	14	3.71	520-	2-3547	40,42,43,46-53	5-3547	43,45-46,48-53*	8-3547	48E-52E	357	12-15	*indicates Blk Ano & Orange Ano avail in 48-53t
450 SX-F	450	2007-13	52	14	3.71	520-	2-3547	40,42,43,46-53	5-3547	43,45-46,48-53*	8-3547	48E-52E	357	12-15	*indicates Blk Ano & Orange Ano avail in 48-53t
450 SX-F	450	2014-15	50	13	3.85	520-	2-3547	40,42,43,46-53	5-3547	43,45-46,48-53*	8-3547	48E-52E	357	12-15	*indicates Blk Ano & Orange Ano avail in 48-53t
450 SX-F	450	2016	48	13	3.69	520-	2-3547	40,42,43,46-53	5-3547	43,45-46,48-53*	8-3547	48E-52E	357	12-15	*indicates Blk Ano & Orange Ano avail in 48-53t
450 SXS	450	2003-06				520-	2-3547	40,42,43,46-53	5-3547	43,45-46,48-53*	8-3547	48E-52E	357	12-15	*indicates Blk Ano & Orange Ano avail in 48-53t
450 SXS-F	450	2006-07				520-	2-3547	40,42,43,46-53	5-3547	43,45-46,48-53*	8-3547	48E-52E	357	12-15	*indicates Blk Ano & Orange Ano avail in 48-53t
450 XC	450	2007	50	14	3.57	520-	2-3547	40,42,43,46-53	5-3547	43,45-46,48-53*	8-3547	48E-52E	357	12-15	*indicates Blk Ano & Orange Ano avail in 48-53t
450 XCR-W	450	2008	50	14	3.57	520-	2-3547	40,42,43,46-53	5-3547	43,45-46,48-53*	8-3547	48E-52E	357	12-15	*indicates Blk Ano & Orange Ano avail in 48-53t
450 XC-G	450	2006				520-	2-3547	40,42,43,46-53	5-3547	43,45-46,48-53*	8-3547	48E-52E	357	12-15	*indicates Blk Ano & Orange Ano avail in 48-53t
450 XC-W	450	2007-09	50	14	3.57	520-	2-3547	40,42,43,46-53	5-3547	43,45-46,48-53*	8-3547	48E-52E	357	12-15	*indicates Blk Ano & Orange Ano avail in 48-53t
450 XC-W	450	2012-16	52	13	4.00	520-118	2-3547	40,42,43,46-53	5-3547	43,45-46,48-53*	8-3547	48E-52E	357	12-15	*indicates Blk Ano & Orange Ano avail in 48-53t
450 XC-W Six Days	450	2010-11	52	13	4.00	520-118	2-3547	40,42,43,46-53	5-3547	43,45-46,48-53*	8-3547	48E-52E	357	12-15	*indicates Blk Ano & Orange Ano avail in 48-53t

SUNSTAR

KTM

For the complete Sunstar part numbers:

Combine the Appl code for your desired product with the number of teeth.

EXAMPLE:	APPL CODE	TEETH #	2-355943

KTM

MODEL	OE GEARING INFO						REAR						FRONT		
KTM	CC	Years	Rear	CS	Ratio	Chain Links	Steel Appl Code	# Teeth	Alum Appl Code	# Teeth	Works Z Appl Code	# Teeth	CS Appl Code	# Teeth	Comments / Notes
450 XC ATV	450	2008-09	38	14	2.71	520-							357	12-15	
450 XC-F	450	2013	52	14	3.71	520-118	2-3547	40,42,43,46-53	5-3547	43,45-46,48-53*	8-3547	48E-52E	357	12-15	*indicates Blk Ano & Orange Ano avail in 48-53t
450 XC-F	450	2014-15	50	13	3.85	520-	2-3547	40,42,43,46-53	5-3547	43,45-46,48-53*	8-3547	48E-52E	357	12-15	*indicates Blk Ano & Orange Ano avail in 48-53t
450 XC-F W	450	2008-10	52	13	4.00	520-	2-3547	40,42,43,46-53	5-3547	43,45-46,48-53*	8-3547	48E-52E	357	12-15	*indicates Blk Ano & Orange Ano avail in 48-53t
500 EXC	500	1992				520-	2-3547	40,42,43,46-53	5-3547	43,45-46,48-53*	8-3547	48E-52E	357	12-15	*indicates Blk Ano & Orange Ano avail in 48-53t
500 EXC	500	2012-15	45	15	3.00	520-118	2-3547	40,42,43,46-53	5-3547	43,45-46,48-53*	8-3547	48E-52E	357	12-15	*indicates Blk Ano & Orange Ano avail in 48-53t
500 MX	500	1985-91				520-							357	12-15	
500 MX	500	1992-93	50	14	3.57	520-	2-3547	40,42,43,46-53	5-3547	43,45-46,48-53*	8-3547	48E-52E	357	12-15	*indicates Blk Ano & Orange Ano avail in 48-53t
500 MXC	500	1985-86				520-							357	12-15	
500 XC-W	500	2012-16	50	14	3.57	520-	2-3547	40,42,43,46-53	5-3547	43,45-46,48-53*	8-3547	48E-52E	357	12-15	*indicates Blk Ano & Orange Ano avail in 48-53t
505 SX ATV	505	2009	38	14	2.71	520-							357	12-15	
505 SX-F	505	2007-08	48	14	3.43	520-	2-3547	40,42,43,46-53	5-3547	43,45-46,48-53*	8-3547	48E-52E	357	12-15	*indicates Blk Ano & Orange Ano avail in 48-53t
505 XC-F	505	2008-09	48	14	3.43	520-	2-3547	40,42,43,46-53	5-3547	43,45-46,48-53*	8-3547	48E-52E	357	12-15	*indicates Blk Ano & Orange Ano avail in 48-53t
520 EXC	520	2000-02	48	14	3.43	520-	2-3547	40,42,43,46-53	5-3547	43,45-46,48-53*	8-3547	48E-52E	357	12-15	*indicates Blk Ano & Orange Ano avail in 48-53t
520 EXC-G	520	2002	48	14	3.43	520-	2-3547	40,42,43,46-53	5-3547	43,45-46,48-53*	8-3547	48E-52E	357	12-15	*indicates Blk Ano & Orange Ano avail in 48-53t
520 MXC	520	2001-02	48	14	3.43	520-	2-3547	40,42,43,46-53	5-3547	43,45-46,48-53*	8-3547	48E-52E	357	12-15	*indicates Blk Ano & Orange Ano avail in 48-53t
520 SX	520	2000-02	48	14	3.43	520-	2-3547	40,42,43,46-53	5-3547	43,45-46,48-53*	8-3547	48E-52E	357	12-15	*indicates Blk Ano & Orange Ano avail in 48-53t
525 EXC-G	525	2003-06	50	14	3.57	520-	2-3547	40,42,43,46-53	5-3547	43,45-46,48-53*	8-3547	48E-52E	357	12-15	*indicates Blk Ano & Orange Ano avail in 48-53t
525 MXC-G	525	2003-05	45	15	3.00	520-	2-3547	40,42,43,46-53	5-3547	43,45-46,48-53*	8-3547	48E-52E	357	12-15	*indicates Blk Ano & Orange Ano avail in 48-53t
525 SX	525	2003-06	48	14	3.43	520-	2-3547	40,42,43,46-53	5-3547	43,45-46,48-53*	8-3547	48E-52E	357	12-15	*indicates Blk Ano & Orange Ano avail in 48-53t
525 XC ATV	525	2008-09	38	14	2.71	520-							357	12-15	
525 XC	525	2007	48	14	3.43	520-	2-3547	40,42,43,46-53	5-3547	43,45-46,48-53*	8-3547	48E-52E	357	12-15	*indicates Blk Ano & Orange Ano avail in 48-53t
525 XC-G	525	2006	50	14	3.57	520-	2-3547	40,42,43,46-53	5-3547	43,45-46,48-53*	8-3547	48E-52E	357	12-15	*indicates Blk Ano & Orange Ano avail in 48-53t
525 XC-W	525	2007	48	14	3.43	520-	2-3547	40,42,43,46-53	5-3547	43,45-46,48-53*	8-3547	48E-52E	357	12-15	*indicates Blk Ano & Orange Ano avail in 48-53t
530 EXC-R	530	2008	45	15	3.00	520-	2-3547	40,42,43,46-53	5-3547	43,45-46,48-53*	8-3547	48E-52E	357	12-15	*indicates Blk Ano & Orange Ano avail in 48-53t
530 EXC	530	2009-11	45	15	3.00	520-118	2-3547	40,42,43,46-53	5-3547	43,45-46,48-53*	8-3547	48E-52E	357	12-15	*indicates Blk Ano & Orange Ano avail in 48-53t
530 XC-W	530	2009-11	50	13	3.85	520-118	2-3547	40,42,43,46-53	5-3547	43,45-46,48-53*	8-3547	48E-52E	357	12-15	*indicates Blk Ano & Orange Ano avail in 48-53t
530 XCR-W	530	2008	50	14	3.57	520-	2-3547	40,42,43,46-53	5-3547	43,45-46,48-53*	8-3547	48E-52E	357	12-15	*indicates Blk Ano & Orange Ano avail in 48-53t
540 SXS	540	2001-06				520-	2-3547	40,42,43,46-53	5-3547	43,45-46,48-53*	8-3547	48E-52E	357	12-15	*indicates Blk Ano & Orange Ano avail in 48-53t
550 DXC	550	1992	48	14	3.43	520-	2-3547	40,42,43,46-53	5-3547	43,45-46,48-53*	8-3547	48E-52E	357	12-15	*indicates Blk Ano & Orange Ano avail in 48-53t
550 MXC	550	1993-96	48	14	3.43	520-118	2-3547	40,42,43,46-53	5-3547	43,45-46,48-53*	8-3547	48E-52E	357	12-15	*indicates Blk Ano & Orange Ano avail in 48-53t
560 SMR	560	2006-07	45	14	3.21	520-	2-3547	40,42,43,46-53	5-3547	43,45-46,48-53*	8-3547	48E-52E	357	12-15	*indicates Blk Ano & Orange Ano avail in 48-53t
600 DXC	600	1989	50	15	3.33	520-							357	12-15	
600 DXC	600	1990-92	50	15	3.33	520-	2-3547	40,42,43,46-53	5-3547	43,45-46,48-53*	8-3547	48E-52E	360	14,15	*indicates Blk Ano & Orange Ano avail in 48-53t
600 MX LC4	600	1990-91	52	15	3.47	520-116	2-3547	40,42,43,46-53	5-3547	43,45-46,48-53*	8-3547	48E-52E	360	14,15	*indicates Blk Ano & Orange Ano avail in 48-53t
620 EGS Adventurer	620	1994-98	50	14	3.57	520-118	2-3547	40,42,43,46-53	5-3547	43,45-46,48-53*	8-3547	48E-52E	360	14,15	*indicates Blk Ano & Orange Ano avail in 48-53t
620 LC4 Duke	620	1995-98	38	17	2.24	520-	2-3547	40,42,43,46-53	5-3547	43,45-46,48-53*	8-3547	48E-52E	360	14,15	*indicates Blk Ano & Orange Ano avail in 48-53t
620 LC4 Enduro	620	1995-96	50	14	3.57	520-	2-3547	40,42,43,46-53	5-3547	43,45-46,48-53*	8-3547	48E-52E	360	14,15	*indicates Blk Ano & Orange Ano avail in 48-53t
620 RXC	620	1994-98				520-	2-3547	40,42,43,46-53	5-3547	43,45-46,48-53*	8-3547	48E-52E	360	14,15	*indicates Blk Ano & Orange Ano avail in 48-53t
620 SX	620	1994-98	50	15	3.33	520-118	2-3547	40,42,43,46-53	5-3547	43,45-46,48-53*	8-3547	48E-52E	360	14,15	*indicates Blk Ano & Orange Ano avail in 48-53t
625 SMC	625	2003-06	40	17	2.35	520-	2-3547	40,42,43,46-53	5-3547	43,45-46,48-53*	8-3547	48E-52E	360	14,15	*indicates Blk Ano & Orange Ano avail in 48-53t
625 SXC	625	2003-06	40	16	2.50	520-	2-3547	40,42,43,46-53	5-3547	43,45-46,48-53*	8-3547	48E-52E	360	14,15	*indicates Blk Ano & Orange Ano avail in 48-53t
640 Adventure-R	640	1999-06	40	16	2.50	520-118	2-3547	40,42,43,46-53	5-3547	43,45-46,48-53*	8-3547	48E-52E	360	14,15	*indicates Blk Ano & Orange Ano avail in 48-53t
640 LC4 Adventure	640	1999-06	42	16	2.63	520-	2-3547	40,42,43,46-53	5-3547	43,45-46,48-53*	8-3547	48E-52E	360	14,15	*indicates Blk Ano & Orange Ano avail in 48-53t
640 LC4 Duke II	640	2000-03	38	17	2.24	520-	2-3547	40,42,43,46-53	5-3547	43,45-46,48-53*	8-3547	48E-52E	360	14,15	*indicates Blk Ano & Orange Ano avail in 48-53t
640 LC4 Duke II	640	2004-06	42	17	2.47	520-	2-3547	40,42,43,46-53	5-3547	43,45-46,48-53*	8-3547	48E-52E	360	14,15	*indicates Blk Ano & Orange Ano avail in 48-53t
640 LC4 Supermoto	640	1999-06	42	17	2.47	520-	2-3547	40,42,43,46-53	5-3547	43,45-46,48-53*	8-3547	48E-52E	360	14,15	*indicates Blk Ano & Orange Ano avail in 48-53t
660 SMC	660	2003-04	38	16	2.38	520-	2-3547	40,42,43,46-53	5-3547	43,45-46,48-53*	8-3547	48E-52E	360	14,15	*indicates Blk Ano & Orange Ano avail in 48-53t
660 SMC	660	2005-06	40	17	2.35	520-	2-3547	40,42,43,46-53	5-3547	43,45-46,48-53*	8-3547	48E-52E	360	14,15	*indicates Blk Ano & Orange Ano avail in 48-53t
690 Duke	690	2008-15	40	16	2.50	520-	2-3547	40,42,43,46-53	5-3547	43,45-46,48-53*	8-3547	48E-52E	360	14,15	*indicates Blk Ano & Orange Ano avail in 48-53t
690 Enduro R	690	2008-15	45	15	3.00	520-	2-3547	40,42,43,46-53	5-3547	43,45-46,48-53*	8-3547	48E-52E	360	14,15	*indicates Blk Ano & Orange Ano avail in 48-53t
690 SMC	690	2008-10	42	16	2.63	520-	2-3547	40,42,43,46-53	5-3547	43,45-46,48-53*	8-3547	48E-52E	360	14,15	*indicates Blk Ano & Orange Ano avail in 48-53t
690 SMC R	690	2015	42	16	2.63	520-	2-3547	40,42,43,46-53	5-3547	43,45-46,48-53*	8-3547	48E-52E	360	14,15	*indicates Blk Ano & Orange Ano avail in 48-53t
690 Supermoto / R	690	2007-09	40	16	2.50	520-	2-3547	40,42,43,46-53	5-3547	43,45-46,48-53*	8-3547	48E-52E	360	14,15	*indicates Blk Ano & Orange Ano avail in 48-53t
950 LC8 Supermoto R	950	2007-08	41	17	2.41	525-	2-4445	37,38,41					427	16,17	
950 Super Enduro R	950	2007-09	45	16	2.81	525-							427	16,17	
990 Adventure	990	2005-13	42	17	2.47	525-							427	16,17	
990 Supermoto R/T	990	2010-13	41	17	2.41	525-	2-4445	37,38,41					427	16,17	

SUNSTAR

KTM/SUZUKI

For the complete Sunstar part numbers:

Combine the Appl code for your desired product with the number of teeth.

EXAMPLE:	APPL CODE	TEETH #	2-355943

KTM

MODEL	OE GEARING INFO						REAR						FRONT		
KTM	CC	Years	Rear	CS	Ratio	Chain Links	Steel Appl Code	# Teeth	Alum Appl Code	# Teeth	Works Z Appl Code	# Teeth	CS Appl Code	# Teeth	Comments / Notes
990 Supermoto	990	2008-10	41	17	2.41	525-	2-4445	37,38,41					427	16,17	
1190 RC8	1190	2008-09	37	17	2.18	525-108	2-4445	37,38,41					427	16,17	
1190 RC8 R	1190	2010-14	38	17	2.24	525-	2-4445	37,38,41					427	16,17	
1190 RC8 R	1190	2015	37	17	2.18	525-	2-4445	37,38,41					427	16,17	
1290 Super Duke R	1290	2014-15	38	17	2.24	525-							427	16,17	

SUZUKI

MODEL	OE GEARING INFO						REAR						FRONT		
SUZUKI	CC	Years	Rear	CS	Ratio	Chain Links	Steel Appl Code	# Teeth	Alum Appl Code	# Teeth	Works Z Appl Code	# Teeth	CS Appl Code	# Teeth	Comments / Notes
AC50	50	1970	37	14	2.64	420-106	2-1034	37					101	11-14	
ALT50 Trailbuddy	50	1983-84	37	11	3.36	420-84	2-1034	37					101	11-14	
AS50	50	1970	35	12	2.92	420-104	2-1034	37					101	11-14	
F50	50	1970-71	32	13	2.46	420-102	2-1034	37					101	11-14	
JR50	50	1978-82	28	13	2.15	420-78	2-1006	28					101	11-14	
JR50	50	1985-06	28	13	2.15	420-78	2-1006	28					101	11-14	
JR50R	50	1983	28	13	2.15	420-78	2-1006	28					101	11-14	
LT50	50	1984-87	37	11	3.36	420-84	2-1034	37					101	11-14	
MT50	50	1971-72	28	13	2.15	420-92							101	11-14	
MT50	50	1973	32	13	2.46	420-92							101	11-14	
OR50	50	1979-80	43	13	3.31	420-98	2-1034	37					101	11-14	
RB50 GSXR50	50	1987	37	14	2.64	420-100	2-1034	37					101	11-14	
RM50	50	1978-80	42	12	3.50	420-92							101	11-14	
TS50	50	1971-74	42	15	2.80	420-	2-1034	37					101	11-14	
RM60	60	1979	44	12	3.67	420-94							101	11-14	
RM60	60	1980-83	42	12	3.50	420-92							101	11-14	
RM65	65	2003-05	47	13	3.61	420-110	2-1455	47,48	5-1455	45-48			104	12-15	
DR-Z70	70	2008-09	33	13	2.54	428-							201	12	
TM75	75	1974-75	42	15	2.80	420-112	2-1034	37					101	11-14	
TM75	75	1976	39	15	2.60	420-112	2-1034	37					101	11-14	
TS75	75	1975-77	42	15	2.80	420-110	2-1034	37					101	11-14	
DS80	80	1978-79	40	14	2.83	428-98	2-2034	34					201	12	
DS80	80	1980-83	34	12	2.83	428-88	2-2034	34					201	12	
DS80	80	1996-00	34	12	2.83	428-96	2-2034	34					201	12	
JR80	80	1985-03	34	12	2.83	428-88	2-2034	34					201	12	
LT80 Quadsport	80	1989-06	22	10	2.20	520-36	2-3014	22					354	10	
RM80	80	1977	46	13	3.54	428-130							201	12	
RM80	80	1978	42	14	3.00	428-104							201	12	
RM80	80	1979	48	14	3.43	428-110							201	12	
RM80	80	1980-81	50	14	3.57	428-112							201	12	
RM80	80	1982	52	13	4.00	428-116	2-2429	47-50	5-2429	46-50			203	12-16	
RM80	80	1983	50	13	3.85	428-118	2-2429	47-50	5-2429	46-50			203	12-16	
RM80	80	1984-85	44	13	3.38	428-114	2-2429	47-50	5-2429	46-50			203	12-16	
RM80	80	1989-01	48	14	3.43	428-118	2-2429	47-50	5-2429	46-50			203	12-16	
RM85	85	2002-16	47	14	3.36	428-118	2-2429	47-50	5-2429	46-50			203	12-16	
RM85L	85	2003-12	47	13	3.62	428-122	2-2429	47-50	5-2429	46-50			203	12-16	
RV90	90	1972-77	47	15	3.14	428-124	2-2034	34					206	13-15	
DR100	100	1983-90	42	13	3.23	428-112							211	13	
DS100	100	1978-81	44	14	3.14	428-114							203	12-16	
RM100	100	1977	57	14	4.07	428-132							211	13	
RM100	100	1978	57	13	4.38	428-132							211	13	
RM100	100	1979-81	60	13	4.61	428-132							211	13	

SUNSTAR

SUZUKI

For the complete Sunstar part numbers:

Combine the Appl code for your desired product with the number of teeth.

EXAMPLE:	APPL CODE	TEETH #	2-355943

SUZUKI

MODEL	OE GEARING INFO						REAR						FRONT		
SUZUKI	CC	Years	Rear	CS	Ratio	Chain Links	Steel Appl Code	# Teeth	Alum Appl Code	# Teeth	Works Z Appl Code	# Teeth	CS Appl Code	# Teeth	Comments / Notes
RM100	100	2003	51	13	3.93	420-	2-1423	48-54					104	12-15	
SP100	100	1983	45	13	3.46	428-118							211	13	
TS100	100	1978	44	14	3.14	428-114							203	12-16	
TS100	100	1979-81	46	14	3.29	428-114							203	12-16	
DR-Z110	110	2003-05	33	14	2.36	420-86	2-1037	32-35,38					109	13-15	
ALT125	125	1983-86	49	13	3.77	428-90	2-2441	49					211	13	Use Stock Dampers w/ Rear Sprocket
DR125	125	1983-84	47	14	3.36	428-122							211	13	
DR125	125	1986-88	53	16	3.31	428-134							220	14,16	
DR125SE	125	1994-96	53	16	3.31	428-134							220	14,16	
DR-Z125	125	2003-13	51	14	3.64	428-122	2-2449	51,57					220	14,16	
DR-Z125L	125	2003-15	57	14	4.07	428-134	2-2449	51,57					220	14,16	
DS125	125	1979-81	44	15	2.93	428-114							203	12-16	
GN125	125	1982-83	42	14	3.00	428-114							211	13	
GN125E	125	1991-97	42	14	3.00	428-114							211	13	
LT125	125	1983-87	49	13	3.77	428-90	2-2441	49					211	13	Use Stock Dampers w/ Rear Sprocket
RM125	125	1976	57	14	4.07	428-130							211	13	
RM125	125	1977	59	14	4.24	428-132							211	13	
RM125	125	1978	59	14	4.21	428-132							211	13	
RM125	125	1979	59	13	4.54	428-132							211	13	
RM125	125	1980-84	51	12	4.25	520-112	2-3577	38-39,41-52	5-3577	44,46-52*	8-3577	48E-51E	322	11-13	*indicates 48-52t Avail in Blk Ano
RM125	125	1985-86	48	12	4.00	520-114	2-3577	38-39,41-52	5-3577	44,46-52*	8-3577	48E-51E	322	11-13	*indicates 48-52t Avail in Blk Ano
RM125	125	1987	49	12	4.08	520-116	2-3577	38-39,41-52	5-3577	44,46-52*	8-3577	48E-51E	322	11-13	*indicates 48-52t Avail in Blk Ano
RM125	125	1988-91	51	13	3.92	520-114	2-3577	38-39,41-52	5-3577	44,46-52*	8-3577	48E-51E	322	11-13	*indicates 48-52t Avail in Blk Ano
RM125	125	1992-96	49	12	4.08	520-114	2-3577	38-39,41-52	5-3577	44,46-52*	8-3577	48E-51E	322	11-13	*indicates 48-52t Avail in Blk Ano
RM125	125	1997-99	50	12	4.17	520-112	2-3577	38-39,41-52	5-3577	44,46-52*	8-3577	48E-51E	322	11-13	*indicates 48-52t Avail in Blk Ano
RM125	125	2000-03	49	12	4.08	520-112	2-3577	38-39,41-52	5-3577	44,46-52*	8-3577	48E-51E	322	11-13	*indicates 48-52t Avail in Blk Ano
RM125	125	2004-05	50	12	4.17	520-114	2-3577	38-39,41-52	5-3577	44,46-52*	8-3577	48E-51E	322	11-13	*indicates 48-52t Avail in Blk Ano
RM125	125	2006-08	51	12	4.25	520-114	2-3577	38-39,41-52	5-3577	44,46-52*	8-3577	48E-51E	322	11-13	*indicates 48-52t Avail in Blk Ano
RV125 Tracker	125	1973-77	40	12	3.33	520-92							315	10,12-17	
SP125	125	1983	47	14	3.36	428-122							211	13	
SP125	125	1986-88	53	16	3.31	428-134							220	14,16	
TC125	125	1971-77	37	12	3.03	520-92	2-3135	45					315	10,12-17	
TS125	125	1978-79	44	15	2.93	428-114							203	12-16	
TS125	125	1980-81	46	15	3.07	428-116							203	12-16	
LT160E Quadrunner	160	1988-91	39	11	3.55	520-84	2-3129	39,41,42					331	11,12	
LT-F160	160	1991-01	39	11	3.55	520-84	2-3129	39,41,42					331	11,12	
PE175	175	1978-79	48	12	4.00	520-106	2-3631	42,43,45,47-52					322	11-13	
PE175	175	1980-81	48	12	4.00	520-106							322	11-13	
PE175	175	1982-84	48	12	4.00	520-110							322	11-13	
RS175	175	1980-82	46	12	3.83	520-106	2-3577	38-39,41-52	5-3577	44,46-52*	8-3577	48E-51E	322	11-13	*indicates 48-52t Avail in Blk Ano
ALT185	185	1985	38	12	3.17	520-72	2-3441	38					331	11,12	Use Stock Dampers w/ Rear Sprocket
DS185	185	1978-80	39	12	3.25	520-102	2-3135	45					301	11-13	
LT185	185	1984-87	38	12	3.17	520-72	2-3441	38					331	11,12	Use Stock Dampers w/ Rear Sprocket
TC185	185	1974-77	39	12	3.25	520-94	2-3135	45							
TS185	185	1971-81	39	12	3.25	520-102	2-3135	45					301	11-13	
DR200	200	1986-88	45	15	3.00	520-112	2-3135	45					323	11-16	
DR200SE	200	1996-13	45	15	3.00	520-112	2-3135	45					323	11-16	
DR200S	200	2015	45	15	3.00	520-112	2-3135	45					323	11-16	
SP200	200	1986-88	45	15	3.00	520-110	2-3135	45					323	11-16	
LT230E	230	1987-93	41	11	3.73	520-84	2-3129	39,41,42					331	11,12	
LT230S	230	1985-88	41	12	3.42	520-84	2-3129	39,41,42					331	11,12	
DR250	250	1990-93	49	13	3.77	520-110	2-3577	38-39,41-52	5-3577	44,46-52*	8-3577	48E-51E	323	11-16	*indicates 48-52t Avail in Blk Ano
DR250S	250	1990-92	49	13	3.77	520-112	2-3631	42,43,45,47-52					323	11-16	
DR250SE	250	1993-95	42	14	3.00	520-108	2-3631	42,43,45,47-52					323	11-16	
DR-Z250	250	2001-07	49	13	3.77	520-112	2-3577	38-39,41-52	5-3577	44,46-52*	8-3577	48E-51E	323	11-16	*indicates 48-52t Avail in Blk Ano
GW250	250	2014	46	14	3.29	520-	2-3383	39,46					331	11,12	

SUNSTAR

SUZUKI

For the complete Sunstar part numbers:

Combine the Appl code for your desired product with the number of teeth.

EXAMPLE:	APPL CODE	TEETH #	2-355943

SUZUKI

MODEL	OE GEARING INFO						REAR						FRONT		
SUZUKI	CC	Years	Rear	CS	Ratio	Chain Links	Steel Appl Code	# Teeth	Alum Appl Code	# Teeth	Works Z Appl Code	# Teeth	CS Appl Code	# Teeth	Comments / Notes
LT250E	250	1985	38	11	3.45	520-78	2-3211	40					332	11-13	
LT250EF	250	1985	38	11	3.45	520-78	2-3211	40					332	11-13	
LT250EF	250	1986	41	11	3.73	520-78	2-3211	40					352	11	
LT250R Quadracer	250	1985-92	42	12	3.50	520-102	2-3129	39,41,42					323	11-16	
LT250S	250	1989-90	39	12	3.25	520-86	2-3129	39,41,42					331	11,12	
RGV250	250	1992	44	14	3.14	520-	2-3631	42,43,45,47-52					325	12-16	
RL250	250	1974-75	54	15	3.60	428-120							213	14,15	
RM250	250	1979-80	50	14	3.57	520-108	2-3631	42,43,45,47-52							
RM250	250	1981	50	14	3.57	520-114	2-3577	38-39,41-52	5-3577	44,46-52*	8-3577	48E-51E			*indicates 48-52t Avail in Blk Ano
RM250	250	1982	49	14	3.50	520-114	2-3577	38-39,41-52	5-3577	44,46-52*	8-3577	48E-51E	323	11-16	*indicates 48-52t Avail in Blk Ano
RM250	250	1983	50	14	3.57	520-116	2-3577	38-39,41-52	5-3577	44,46-52*	8-3577	48E-51E	323	11-16	*indicates 48-52t Avail in Blk Ano
RM250	250	1984-86	50	14	3.57	520-116	2-3667	42					323	11-16	
RM250	250	1987	50	14	3.57	520-114	2-3577	38-39,41-52	5-3577	44,46-52*	8-3577	48E-51E	323	11-16	*indicates 48-52t Avail in Blk Ano
RM250	250	1988	50	13	3.85	520-116	2-3577	38-39,41-52	5-3577	44,46-52*	8-3577	48E-51E	323	11-16	*indicates 48-52t Avail in Blk Ano
RM250	250	1989-96	49	13	3.77	520-114	2-3577	38-39,41-52	5-3577	44,46-52*	8-3577	48E-51E	323	11-16	*indicates 48-52t Avail in Blk Ano
RM250	250	1997-98	50	13	3.85	520-114	2-3577	38-39,41-52	5-3577	44,46-52*	8-3577	48E-51E	323	11-16	*indicates 48-52t Avail in Blk Ano
RM250	250	1999-00	48	13	3.69	520-114	2-3577	38-39,41-52	5-3577	44,46-52*	8-3577	48E-51E	323	11-16	*indicates 48-52t Avail in Blk Ano
RM250	250	2001-03	49	13	3.77	520-114	2-3577	38-39,41-52	5-3577	44,46-52*	8-3577	48E-51E	323	11-16	*indicates 48-52t Avail in Blk Ano
RM250	250	2004-06	50	13	3.85	520-114	2-3577	38-39,41-52	5-3577	44,46-52*	8-3577	48E-51E	323	11-16	*indicates 48-52t Avail in Blk Ano
RMX250	250	1989-98	50	13	3.85	520-114	2-3577	38-39,41-52	5-3577	44,46-52*	8-3577	48E-51E	323	11-16	*indicates 48-52t Avail in Blk Ano
RM-Z250	250	2004-06	48	13	3.69	520-114	2-3619	42-43,47-52	5-3619	44-54*	8-3619	48E-52E	311	12-14	*indicates 48-52t Avail in Blk Ano
RM-Z250	250	2007-09	48	12	4.00	520-112	2-3577	38-39,41-52	5-3577	44,46-52*	8-3577	48E-51E	322	11-13	*indicates 48-52t Avail in Blk Ano
RM-Z250	250	2010-12	49	13	3.77	520-114	2-3577	38-39,41-52	5-3577	44,46-52*	8-3577	48E-51E	322	11-13	*indicates 48-52t Avail in Blk Ano
RM-Z250	250	2013-16	49	13	3.77	520-114	2-3577	38-39,41-52	5-3577	44,46-52*	8-3577	48E-51E	3C5	12,13	*indicates 48-52t Avail in Blk Ano
RS250	250	1980-81	52	13	4.00	520-110	2-3631	42,43,45,47-52							
LT300E	300	1987-89	41	11	3.73	520-92	2-3211	40					352	11	
DR350	350	1990-93	47	14	3.36	520-110	2-3577	38-39,41-52	5-3577	44,46-52*	8-3577	48E-51E	323	11-16	*indicates 48-52t Avail in Blk Ano
DR350	350	1994-99	44	15	2.93	520-110	2-3577	38-39,41-52	5-3577	44,46-52*	8-3577	48E-51E	323	11-16	*indicates 48-52t Avail in Blk Ano
DR350S	350	1990-93	43	14	3.07	520-108	2-3631	42,43,45,47-52					323	11-16	
DR350SE	350	1994-95	41	15	2.73	520-110	2-3631	42,43,45,47-52					323	11-16	
DR350SE	350	1996-99	41	15	2.73	520-108	2-3577	38-39,41-52	5-3577	44,46-52*	8-3577	48E-51E	323	11-16	*indicates 48-52t Avail in Blk Ano
DR400	400	1980	46	16	2.88	520-108	2-3631	42,43,45,47-52							
DR-Z400	400	2000-03	47	14	3.36	520-112	2-3577	38-39,41-52	5-3577	44,46-52*	8-3577	48E-51E	323	11-16	*indicates 48-52t Avail in Blk Ano
DR-Z400E	400	2000-07	47	14	3.36	520-112	2-3577	38-39,41-52	5-3577	44,46-52*	8-3577	48E-51E	323	11-16	*indicates 48-52t Avail in Blk Ano
DR-Z400S	400	2000-15	44	15	2.93	520-112	2-3577	38-39,41-52	5-3577	44,46-52*	8-3577	48E-51E	323	11-16	*indicates 48-52t Avail in Blk Ano
DR-Z400SM	400	2005-09	41	15	2.73	520-110	2-3577	38-39,41-52	5-3577	44,46-52*	8-3577	48E-51E	323	11-16	*indicates 48-52t Avail in Blk Ano
DR-Z400SM	400	2014-15	44	15	2.93	520-112	2-3577	38-39,41-52	5-3577	44,46-52*	8-3577	48E-51E	323	11-16	*indicates 48-52t Avail in Blk Ano
GS400	400	1977-78	45	16	2.81	530-104							511	13-18	
GSF400 Bandit	400	1991-92	47	14	3.36	525-114	2-4383	44-47							
GSF400 Bandit	400	1993	46	14	3.29	525-114	2-4383	44-47							
LT-Z400 Quadracer	400	2003-08	40	14	2.86	520-96	2-3130	37,38,40,42	5-3130	40			329	13-15	
LT-Z400 Quadracer	400	2009-14	40	14	2.86	520-96	2-3487	36-38,40	5-3487	37,38			329	13-15	
RM400	400	1979-80	49	14	3.50	520-110	2-3631	42,43,45,47-52							
GS425 (ALL)	425	1979	45	16	2.81	530-104							511	13-18	
GS450E	450	1980-82	45	16	2.81	530-104							511	13-18	
GS450E	450	1983	45	16	2.81	530-110							511	13-18	
GS450L	450	1980-82	41	16	2.56	530-102							511	13-18	
GS450L	450	1983	42	16	2.63	530-102							511	13-18	
GS450L	450	1985-88	42	16	2.63	530-108							511	13-18	
GS450S	450	1980-81	45	16	2.81	530-104							511	13-18	
GS450T	450	1981-82	43	16	2.69	530-104							511	13-18	
GS450TX	450	1982-83	43	16	2.69	530-108							511	13-18	
LT-R450	450	2006-09	36	14	2.57	520-96	2-3487	36-38,40	5-3487	37,38			329	13-15	
RM-Z450	450	2005-07	49	14	3.50	520-114	2-3577	38-39,41-52	5-3577	44,46-52*	8-3577	48E-51E	3A3	12-14	*indicates 48-52t Avail in Blk Ano
RM-Z450	450	2008-16	50	13	3.85	520-114	2-3577	38-39,41-52	5-3577	44,46-52*	8-3577	48E-51E	3A3	12-14	*indicates 48-52t Avail in Blk Ano
RMX450Z	450	2010-11	51	13	3.92	520-114	2-3577	38-39,41-52	5-3577	44,46-52*	8-3577	48E-51E	3A3	12-14	*indicates 48-52t Avail in Blk Ano

SUNSTAR

SUZUKI

For the complete Sunstar part numbers:

Combine the Appl code for your desired product with the number of teeth.

EXAMPLE:	APPL CODE	TEETH #	2-355943

SUZUKI

MODEL	OE GEARING INFO						REAR						FRONT		
SUZUKI	CC	Years	Rear	CS	Ratio	Chain Links	Steel Appl Code	# Teeth	Alum Appl Code	# Teeth	Works Z Appl Code	# Teeth	CS Appl Code	# Teeth	Comments / Notes
RM465	465	1981	49	14	3.50	520-112	2-3667	42							
RM465	465	1982	47	14	3.36	520-112	2-3667	42					328	13	
GS500	500	2001-02	39	16	2.44	520-110	2-3383	39,46					333	14-17	
GS500E	500	1989-93	39	16	2.44	520-110	2-3383	39,46					325	12-16	
GS500E	500	1994-00	39	16	2.44	520-110	2-3383	39,46					333	14-17	
GS500-F	500	2004-08	39	16	2.44	520-110	2-3383	39,46					333	14-17	
LT500R Quadzilla	500	1987	42	13	3.23	520-96	2-3211	40					328	13	
LT500R Quadzilla	500	1988-90	40	13	3.08	520-98	2-3211	40					328	13	
RG500 Gamma	500	1986	40	16	2.50	530-106							511	13-18	
RM500	500	1983	46	14	3.29	520-116	2-3667	42					328	13	
RM500	500	1984	46	14	3.29	520-112	2-3667	42					328	13	
GS550	550	1977-79	50	15	3.33	530-110							511	13-18	
GS550E	550	1978-80	50	15	3.33	530-110	2-5226	42,43,45,47,50					511	13-18	
GS550E	550	1983-86	48	14	3.43	530-112	2-5226	42,43,45,47,50					511	13-18	
GS550ES	550	1983-86	48	14	3.43	530-112	2-5226	42,43,45,47,50					511	13-18	
GS550ESE	550	1983-86	48	14	3.43	530-112	2-5226	42,43,45,47,50					511	13-18	
GS550L	550	1979	50	15	3.33	530-110	2-5226	42,43,45,47,50					511	13-18	
GS550L	550	1980	51	15	3.40	530-112	2-5226	42,43,45,47,50					511	13-18	
GS550L	550	1981	49	15	3.27	530-108	2-5226	42,43,45,47,50					511	13-18	
GS550L	550	1982	49	15	3.27	530-108							511	13-18	
GS550L	550	1983	47	14	3.36	530-112	2-5226	42,43,45,47,50					511	13-18	
GS550L	550	1985-86	47	14	3.36	530-112	2-5226	42,43,45,47,50					511	13-18	
GS550M	550	1982	50	15	3.33	530-112	2-5226	42,43,45,47,50					511	13-18	
GS550T	550	1981	50	15	3.33	530-110	2-5226	42,43,45,47,50					511	13-18	
GSF600S Bandit	600	1996-99	48	15	3.20	530-112	2-5389	43,45-48					511	13-18	
GSF600S Bandit	600	2000-03	47	15	3.13	530-110	2-5389	43,45-48					511	13-18	
GSX600F Katana	600	1988	46	14	3.29	530-112							511	13-18	
GSX600F Katana	600	1989-91	46	14	3.29	530-112	2-5389	43,45-48					511	13-18	
GSX600F Katana	600	1989-91	46	14	3.29	530-112	2-3383	39,46					333	14-17	530>520 Conversion
GSX600F Katana	600	1992-97	45	14	3.21	530-112	2-5389	43,45-48					511	13-18	
GSX600F Katana	600	1992-97	45	14	3.21	530-112	2-3383	39,46					333	14-17	530>520 Conversion
GSX600F Katana	600	1998-06	47	15	3.13	530-118	2-5389	43,45-48					511	13-18	
GSX600F Katana	600	1998-06	47	15	3.13	530-118	2-3383	39,46					333	14-17	530>520 Conversion
GSX-R600	600	1997	45	16	2.81	525-108	2-4523	44,46					404	14-17	
GSX-R600	600	1998-00	46	16	2.88	525-108	2-4523	44,46					404	14-17	
GSX-R600	600	2001-05	45	16	2.81	525-108	2-4499	40-48					404	14-17	
GSX-R600	600	2001-05	45	16	2.81	525-108			5-3497	40-48			333	14-17	525>520 Conversion
GSX-R600	600	2006-09	43	16	2.69	525-114	2-4499	40-48					404	14-17	
GSX-R600	600	2006-09	43	16	2.69	525-114			5-3497	40-48			333	14-17	525>520 Conversion
GSX-R600	600	2011-15	43	16	2.69	525-114	2-4472	43-46					404	14-17	
GSX-R600	600	2011-15	43	16	2.69	525-114			5-3472	42-46			333	14-17	525>520 Conversion
GSX-R600W	600	1992-93	44	14	3.14	530-108	2-5389	43,45-48					511	13-18	
GSX-R600W	600	1992-93	44	14	3.14	530-108	2-3383	39,46					333	14-17	530>520 Conversion
RF600R	600	1994-96	43	14	3.07	530-108	2-5389	43,45-48					511	13-18	
SP600	600	1985	42	16	2.63	520-108	2-3667	42					335	15	
DL650 V-Strom	650	2004-09	47	15	3.13	525-116	2-4499	40-48					404	14-17	
DL650 V-Strom	650	2004-09	47	15	3.13	525-116			5-3497	40-48			333	14-17	525>520 Conversion
DL650 V-Strom	650	2011-15	47	15	3.13	525-118	2-4499	40-48					404	14-17	
DL650 V-Strom	650	2011-15	47	15	3.13	525-118			5-3497	40-48			333	14-17	525>520 Conversion
DR650S	650	1990-93	42	16	2.63	520-114	2-3667	42					335	15	
DR650SE	650	1994-95	42	16	2.63	520-114	2-3667	42					335	15	
DR650SE	650	1996-15	42	15	2.73	525-110	2-4628	41-43					416	15	
DR650SE	650	1996-15	42	15	2.73	525-110	2-3631	42,43,45,47-52					335	15	525>520 Conversion
GR650 Tempter	650	1983	38	15	2.53	530-104	2-5226	42,43,45,47,50							
GSX650F	650	2008-09	48	15	3.20	525-118	2-4386	48					404	14-17	
GS650E	650	1981-82	45	15	3.00	530-106	2-5226	42,43,45,47,50					511	13-18	

SUNSTAR

SUZUKI

For the complete Sunstar part numbers:

Combine the Appl code for your desired product with the number of teeth.

EXAMPLE:	APPL CODE	TEETH #	2-355943

SUZUKI

MODEL	OE GEARING INFO						REAR						FRONT		
SUZUKI	CC	Years	Rear	CS	Ratio	Chain Links	Steel Appl Code	# Teeth	Alum Appl Code	# Teeth	Works Z Appl Code	# Teeth	CS Appl Code	# Teeth	Comments / Notes
SV650	650	1999-09	45	15	3.00	525-110	2-4383	44-47					404	14-17	
SV650 A	650	2003-09	45	15	3.00	525-114	2-4383	44-47					404	14-17	
SV650 S	650	1999-09	44	15	2.93	525-108	2-4383	44-47					404	14-17	
SFV650 Gladius	650	2009-14	46	15	3.07	520-112	2-3383	39,46					325	12-16	
GS700E	700	1985	45	14	3.21	530-114	2-5226	42,43,45,47,50					511	13-18	
GS700ES	700	1985	45	14	3.21	530-114	2-5226	42,43,45,47,50					511	13-18	
GS750	750	1977-79	41	15	2.73	630-96	2-6223	41,42					604	13,15	
GS750	750	1977-79	41	15	2.73	630-96	2-5226	42,43,45,47,50					511	13-18	630>530 Conversion
GS750E	750	1978-79	41	15	2.73	630-96	2-6223	41,42					604	13,15	
GS750E	750	1978-79	41	15	2.73	630-96	2-5226	42,43,45,47,50					511	13-18	630>530 Conversion
GS750E	750	1980-82	41	15	2.73	630-96	2-6223	41,42					609	15	
GS750E	750	1980-82	41	15	2.73	630-96	2-5226	42,43,45,47,50					511	13-18	630>530 Conversion
GS750E	750	1983	43	14	3.07	530-112	2-5226	42,43,45,47,50					511	13-18	
GS750ES	750	1983	43	14	3.07	530-112	2-5226	42,43,45,47,50					511	13-18	
GS750L	750	1979	41	15	2.73	630-96	2-6223	41,42					604	13,15	
GS750L	750	1979	41	15	2.73	630-96	2-5226	42,43,45,47,50					511	13-18	630>530 Conversion
GS750L	750	1980-81	40	15	2.67	630-96	2-6223	41,42					609	15	
GS750L	750	1980-81	40	15	2.67	630-96	2-5226	42,43,45,47,50					511	13-18	630>530 Conversion
GS750S	750	1983	41	15	2.73	630-96	2-6223	41,42					609	15	
GS750S	750	1983	41	15	2.73	630-96	2-5226	42,43,45,47,50					511	13-18	630>530 Conversion
GS750T	750	1982-83	41	15	2.73	630-96	2-6223	41,42					609	15	
GS750T	750	1982-83	41	15	2.73	630-96	2-5226	42,43,45,47,50					511	13-18	630>530 Conversion
GSX750F Katana	750	1989-97	47	15	3.13	530-118	2-5389	43,45-48					511	13-18	
GSX750F Katana	750	1998-06	45	15	3.00	530-116	2-5389	43,45-48					511	13-18	
GSX-R750	750	1986-87	42	14	3.00	530-106	2-5389	43,45-48					511	13-18	
GSX-R750	750	1988-89	45	15	3.00	530-108	2-5389	43,45-48					511	13-18	
GSX-R750	750	1990-92	43	15	2.87	530-108	2-5226	42,43,45,47,50					511	13-18	
GSX-R750	750	1993-95	43	15	2.87	530-108	2-5226	42,43,45,47,50					511	13-18	
GSX-R750	750	1996-97	43	16	2.69	530-108	2-5501	40,42,45,46,48					511	13-18	
GSX-R750	750	1998-99	44	16	2.75	525-108	2-4523	44,46					404	14-17	
GSX-R750	750	2000-03	42	17	2.47	525-108	2-4499	40-48					404	14-17	
GSX-R750	750	2000-03	42	17	2.47	525-108			5-3497	40-48			333	14-17	525>520 Conversion
GSX-R750	750	2004-05	43	17	2.53	525-108	2-4499	40-48					404	14-17	
GSX-R750	750	2004-05	43	17	2.53	525-108			5-3497	40-48			333	14-17	525>520 Conversion
GSX-R750	750	2006-09	45	17	2.65	525-116	2-4499	40-48					404	14-17	
GSX-R750	750	2006-09	45	17	2.65	525-116			5-3497	40-48			333	14-17	525>520 Conversion
GSX-R750	750	2011-15	45	17	2.65	525-116	2-4472	43-46					404	14-17	
GSX-R750	750	2011-15	45	17	2.65	525-116			5-3472	42-46			333	14-17	525>520 Conversion
GSX-R750W	750	1993-95	42	15	2.80	530-108	2-5226	42,43,45,47,50					511	13-18	
GT750	750	1972-74	47	15	3.13	530-108	2-5226	42,43,45,47,50							
GT750	750	1975-76	43	16	2.69	530-106	2-5226	42,43,45,47,50							
GT750	750	1977	40	15	2.67	530-104	2-5226	42,43,45,47,50							
VZ800 Marauder	800	1997-04	48	15	3.20	530-116	2-5389	43,45-48					511	13-18	
RF900R	900	1994-97	43	15	2.87	532-110	2-5226	42,43,45,47,50					511	13-18	532>530 Conversion
RF900RZ	900	1995	43	15	2.87	532-110	2-5226	42,43,45,47,50					511	13-18	532>530 Conversion
DL1000 V-Strom	1000	2002-14	41	17	2.41	525-112	2-4499	40-48					404	14-17	
DL1000 V-Strom	1000	2002-14	41	17	2.41	525-112			5-3497	40-48			333	14-17	525>520 Conversion
GS1000	1000	1978-79	42	15	2.80	630-96	2-6223	41,42					609	15	
GS1000	1000	1978-79	42	15	2.80	630-96	2-5226	42,43,45,47,50					511	13-18	630>530 Conversion
GS1000E	1000	1978-80	42	15	2.80	630-96	2-6223	41,42					609	15	
GS1000E	1000	1978-80	42	15	2.80	630-96	2-5226	42,43,45,47,50					511	13-18	630>530 Conversion
GS1000L	1000	1979	42	15	2.80	630-96	2-6223	41,42					609	15	
GS1000L	1000	1979	42	15	2.80	630-96	2-5226	42,43,45,47,50					511	13-18	630>530 Conversion
GS1000S	1000	1979-82	42	15	2.80	630-96	2-6223	41,42					609	15	
GS1000S	1000	1979-82	42	15	2.80	630-96	2-5226	42,43,45,47,50					511	13-18	630>530 Conversion
GSX-R1000	1000	2001-06	42	17	2.47	530-110	2-5499	40,42,43					511	13-18	

SUNSTAR

SUZUKI/TRIUMPH

For the complete Sunstar part numbers:

Combine the Appl code for your desired product with the number of teeth.

EXAMPLE:	APPL CODE	TEETH #	2-355943

SUZUKI

MODEL	OE GEARING INFO						REAR						FRONT		
SUZUKI	CC	Years	Rear	CS	Ratio	Chain Links	Steel Appl Code	# Teeth	Alum Appl Code	# Teeth	Works Z Appl Code	# Teeth	CS Appl Code	# Teeth	Comments / Notes
GSX-R1000	1000	2001-06	42	17	2.47	530-110			5-3497	40-48			333	14-17	530>520 Conversion
GSX-R1000	1000	2007-08	43	17	2.53	530-112	2-5499	40,42,43					511	13-18	
GSX-R1000	1000	2007-08	43	17	2.53	530-112			5-3497	40-48			333	14-17	530>520 Conversion
GSX-R1000	1000	2009-15	42	17	2.47	530-114	2-5474	42-49					560	17,18	
GSX-R1000	1000	2009-15	42	17	2.47	530-114			5-3477	39-49			3B3	16,17	530>520 Conversion
SV1000	1000	2003-07	40	17	2.35	530-108	2-5499	40,42,43					511	13-18	
SV1000	1000	2003-07	40	17	2.35	530-108			5-3497	40-48			333	14-17	530>520 Conversion
SV1000-S	1000	2003-07	40	17	2.35	530-108	2-5499	40,42,43					511	13-18	
SV1000-S	1000	2003-07	40	17	2.35	530-108			5-3497	40-48			333	14-17	530>520 Conversion
TL1000R	1000	1998-03	39	17	2.29	530-106	2-5526	39,40					511	13-18	
TL1000S	1000	1997-01	38	17	2.24	530-104	2-5526	39,40					511	13-18	
GS1100E	1100	1980-83	42	15	2.80	630-96	2-6223	41,42					609	15	
GS1100E	1100	1980-83	42	15	2.80	630-96	2-5226	42,43,45,47,50					511	13-18	630>530 Conversion
GS1100ES	1100	1983	42	15	2.80	630-98	2-6223	41,42					609	15	
GS1100ES	1100	1983	42	15	2.80	630-98	2-5226	42,43,45,47,50					511	13-18	630>530 Conversion
GS1100L	1100	1980	40	15	2.67	630-96	2-6223	41,42					609	15	
GS1100L	1100	1980	40	15	2.67	630-96	2-5226	42,43,45,47,50					511	13-18	630>530 Conversion
GS1100S	1100	1983	42	15	2.80	630-96	2-6223	41,42					609	15	
GS1100S	1100	1983	42	15	2.80	630-96	2-5226	42,43,45,47,50					511	13-18	630>530 Conversion
GSX1100F Katana	1100	1988-93	52	15	3.47	532-118	2-5226	42,43,45,47,50					511	13-18	532>530 Conversion
GSX-R1100	1100	1986-87	47	14	3.36	532-114	2-5389	43,45-48					511	13-18	532>530 Conversion
GSX-R1100	1100	1988	46	14	3.29	532-114	2-5389	43,45-48					511	13-18	532>530 Conversion
GSX-R1100	1100	1989-92	48	15	3.20	532-114	2-5226	42,43,45,47,50					511	13-18	532>530 Conversion
GSX-R1100W	1100	1993-94	42	15	2.80	532-114	2-5226	42,43,45,47,50					511	13-18	532>530 Conversion
GSX-R1100W	1100	1995-98	44	16	2.75	532-116	2-5226	42,43,45,47,50					511	13-18	532>530 Conversion
GS1150E	1150	1985-86	42	15	2.80	630-102	2-6223	41,42					609	15	
GS1150ES	1150	1984-86	42	15	2.80	630-102	2-6223	41,42					609	15	
GS1150ES3 Bandit	1150	1984	42	15	2.80	630-102	2-6223	41,42					609	15	
GSF1200S Bandit	1200	1997-05	45	15	3.00	530-110	2-5226	42,43,45,47,50					511	13-18	
GSF1250S/ABS Bandit	1250	2007-09	43	18	2.39	530-120	2-5499	40,42,43					511	13-18	
GSX1250 FA	1250	2011	43	18	2.39	530-118	2-5499	40,42,43					511	13-18	
GSX1300-R Hayabusa	1300	1999-07	40	17	2.35	530-112	2-5526	39,40					511	13-18	
GSX1300R Hayabusa	1300	2008-15	43	18	2.39	530-114	2-5499	40,42,43					560	17,18	
GSX1300BK B-King	1300	2008-09	43	18	2.39	530-118	2-5499	40,42,43					560	17,18	

TRIUMPH

MODEL	OE GEARING INFO						REAR						FRONT		
TRIUMPH	CC	Years	Rear	CS	Ratio	Chain Links	Steel Appl Code	# Teeth	Alum Appl Code	# Teeth	Works Z Appl Code	# Teeth	CS Appl Code	# Teeth	Comments / Notes
600 Daytona USA	600	2003-04	45	14	3.21	525-108	2-4499	40-47							
600 Speed Four	600	2003-05	42	14	3.00	525-106	2-4499	40-47							
600TT	600	2000-03	42	14	3.00	525-106	2-4499	40-47							
650 Daytona	650	2005	45	14	3.21	525-108	2-4499	40-47							
675 Daytona	675	2006-12	47	16	2.94	525-116							404	14-17	
675 Daytona R	675	2011-12	47	16	2.94	525-116							404	14-17	
675 Street Triple	675	2008-12	47	16	2.94	525-116							404	14-17	
675 Street Triple R	675	2010-12	47	16	2.94	525-116							404	14-17	
800 Bonneville T100	800	2003-05	43	17	2.53	525-104	2-4499	40-47							
800 Bonneville USA	800	2002-06	43	17	2.53	525-104	2-4329	44							
800 Tiger / XC	800	2011-12	50	16	3.13	525-							404	14-17	
865 Bonneville	865	2007-12	43	18	2.39	525-104	2-4499	40-48							

SUNSTAR

TRIUMPH/YAMAHA

For the complete Sunstar part numbers:

Combine the Appl code for your desired product with the number of teeth.

EXAMPLE:	APPL CODE	TEETH #	2-355943

TRIUMPH

MODEL	OE GEARING INFO						REAR						FRONT		
TRIUMPH	CC	Years	Rear	CS	Ratio	Chain Links	Steel Appl Code	# Teeth	Alum Appl Code	# Teeth	Works Z Appl Code	# Teeth	CS Appl Code	# Teeth	Comments / Notes
865 Bonneville Black	865	2007	43	18	2.39	525-104	2-4499	40-48							
865 Bonneville T100	865	2007-12	43	18	2.39	525-104	2-4499	40-48							
865 Scrambler	865	2006-10	43	18	2.39	525-106	2-4499	40-48							
865 Thruxton	865	2007-13	43	18	2.39	525-104	2-4499	40-48							
900 Thruxton	900	2004-13	43	18	2.39	525-	2-4499	40-48							

YAMAHA

MODEL	OE GEARING INFO						REAR						FRONT		
YAMAHA	CC	Years	Rear	CS	Ratio	Chain Links	Steel Appl Code	# Teeth	Alum Appl Code	# Teeth	Works Z Appl Code	# Teeth	CS Appl Code	# Teeth	Comments / Notes
DT50	50	1988-90	48	13	3.69	420-110							104	12-15	
JT1	50	1971	41	13	3.15	420-90							101	11-14	
JT2	50	1972	41	13	3.15	420-90							101	11-14	
LB50P Chappy	50	1978-82	32	13	2.46	420-92							104	12-15	
RX50 Special	50	1983-84	47	12	3.92	420-110							101	11-14	
RX50M Midnight Special	50	1983-84	47	12	3.92	420-110							101	11-14	
TTR50/E	50	2006-15	37	13	2.85	420-	2-1117	32,35,37,45,48					104	12-15	
YJ1	50	1964-65	39	15	2.60	420-100							104	12-15	
YJ2	50	1964-65	39	15	2.60	420-100							104	12-15	
YSR50	50	1987-92	44	12	3.67	420-100							101	11-14	
YZ50	50	1980	45	12	3.75	420-90							101	11-14	
RD60	60	1973-75	42	13	3.23	420-106	2-1117	32,35,37,45,48					101	11-14	
YZ60	60	1981	42	12	3.50	420-98							104	12-15	
YZ60	60	1982-83	42	13	3.23	420-98							104	12-15	
BW80 Big Wheel	80	1986-88	32	15	2.13	420-90	2-1117	32,35,37,45,48					104	12-15	
BW80 Big Wheel	80	1990	32	15	2.13	420-90	2-1117	32,35,37,45,48					104	12-15	
DT80	80	1974-83	41	14	2.93	420-106							101	11-14	
G6S	80	1970-71	37	14	2.64	420-96	2-1117	32,35,37,45,48					104	12-15	
G7S	80	1972	37	14	2.64	420-96	2-1117	32,35,37,45,48					104	12-15	
GT1	80	1973	41	14	2.93	420-106							101	11-14	
GT80	80	1974-76	41	14	2.93	420-106							101	11-14	
GT80	80	1978-80	41	14	2.93	420-106							101	11-14	
GT-MX	80	1973-79	41	14	2.93	420-106							101	11-14	
LB80-2A	80	1976	28	14	2.00	428-88							104	12-15	
LB80-2A Chappy	80	1977-78	31	15	2.07	420-88	2-1117	32,35,37,45,48					104	12-15	
LB80-2H	80	1976	31	14	2.21	420-88							101	11-14	
LB80-3	80	1977	36	14	2.57	420-92	2-1117	32,35,37,45,48					104	12-15	
MX80	80	1980-82	41	14	2.93	420-92							101	11-14	
PW80	80	1983	32	15	2.13	420-84	2-1117	32,35,37,45,48					104	12-15	
PW80	80	1985	32	15	2.13	420-84	2-1117	32,35,37,45,48					104	12-15	
PW80	80	1991-06	32	15	2.13	420-84	2-1117	32,35,37,45,48					104	12-15	
TY80	80	1974-75	41	12	3.42	420-106							101	11-14	
U7E	80	1969	35	15	2.33	420-100	2-1117	32,35,37,45,48					104	12-15	
YG5S	80	1969	39	15	2.60	420-96	2-1117	32,35,37,45,48					104	12-15	
YZ80	80	1974	43	13	3.31	420-102							101	11-14	
YZ80	80	1975	48	13	3.69	420-104							101	11-14	
YZ80	80	1976	48	14	3.43	420-106							101	11-14	
YZ80	80	1977	48	13	3.69	420-104							101	11-14	
YZ80	80	1978-79	51	14	3.64	428-106							201	12	
YZ80	80	1980	51	14	3.64	428-108	2-2103	42,47,50,52,55					201	12	
YZ80	80	1981-82	44	13	3.38	428-108	2-2103	42,47,50,52,55					203	12-16	
YZ80	80	1983	42	12	3.50	428-110	2-2103	42,47,50,52,55					203	12-16	

SUNSTAR

YAMAHA

For the complete Sunstar part numbers:

Combine the Appl code for your desired product with the number of teeth.

EXAMPLE:	APPL CODE	TEETH #	2-355943

YAMAHA

MODEL	OE GEARING INFO						REAR						FRONT		
YAMAHA	CC	Years	Rear	CS	Ratio	Chain Links	Steel Appl Code	# Teeth	Alum Appl Code	# Teeth	Works Z Appl Code	# Teeth	CS Appl Code	# Teeth	Comments / Notes
YZ80	80	1984	46	15	3.07	428-114	2-2492	48					203	12-16	
YZ80	80	1985	48	14	3.43	428-112	2-2492	48					203	12-16	
YZ80	80	1986-92	46	14	3.29	428-112	2-2492	48					203	12-16	
YZ80	80	1993-01	47	14	3.36	428-118	2-2429	47-50	5-2429	46-50			203	12-16	
YZ85	85	2002-16	47	14	3.36	428-118	2-2429	47-50	5-2429	46-50			226	13-15	
HS1	90	1970-71	40	13	3.08	420-104	2-1117	32,35,37,45,48					104	12-15	
HT1	90	1970-71	49	15	3.27	428-106							203	12-16	
HT1-MX	90	1971	52	15	3.47	428-108							203	12-16	
TTR90	90	2000-07	35	14	2.50	420-86	2-1117	32,35,37,45,48					104	12-15	
YG5T	90	1968	41	15	2.73	420-100							104	12-15	
DT100	100	1974-76	49	14	3.50	428-112							203	12-16	
DT100	100	1977-83	45	14	3.21	420-102	2-1117	32,35,37,45,48					104	12-15	
LS2	100	1972	42	14	3.00	420-106	2-1117	32,35,37,45,48					104	12-15	
LT2	100	1972	49	14	3.50	428-106							203	12-16	
LT2M	100	1972	49	14	3.50	428-112							203	12-16	
LT3	100	1973	49	14	3.50	428-106							203	12-16	
LT-MX	100	1973	49	14	3.50	428-112							203	12-16	
MX100	100	1974-75	52	14	3.71	428-110							203	12-16	
MX100	100	1979-83	48	14	3.43	420-104	2-1117	32,35,37,45,48					104	12-15	
RS100	100	1975-76	36	15	2.40	428-102							203	12-16	
RT100	100	1990	48	14	3.43	420-104	2-1117	32,35,37,45,48					104	12-15	
RT100	100	1992-00	48	14	3.43	420-104	2-1117	32,35,37,45,48					104	12-15	
YG1	100	1963	37	15	2.47	420-100							104	12-15	
YG1K	100	1964	37	15	2.47	420-100							104	12-15	
YG1T	100	1963	51	15	3.40	420-106							104	12-15	
YG1TK	100	1964	51	15	3.40	420-106							104	12-15	
YL1	100	1966	35	15	2.33	420-100	2-1117	32,35,37,45,48					104	12-15	
YL1E	100	1967	35	15	2.33	420-100	2-1117	32,35,37,45,48					104	12-15	
YL2	100	1967	37	16	2.31	420-100							104	12-15	
YZ100	100	1976-77	40	12	3.33	520-90							301	11-13	
YZ100	100	1978-79	43	12	3.58	520-98							301	11-13	
YZ100	100	1980-81	45	12	3.75	520-100							301	11-13	
YZ100	100	1982-83	50	12	4.17	520-106	2-3685	44,48-52					301	11-13	
TT-R110 / E	110	2008-16	35	14	2.50	420-90	2-1117	32,35,37,45,48					104	12-15	
AS2C	125	1969	39	15	2.60	428-116							203	12-16	
AT1	125	1970-71	45	14	3.21	428-112							203	12-16	
AT1-E	125	1969-70	45	15	3.00	428-112							203	12-16	
AT1-MX	125	1971	45	14	3.21	428-112							203	12-16	
AT2	125	1972	45	14	3.21	428-112							203	12-16	
AT3	125	1973	45	14	3.21	428-112							203	12-16	
DT125	125	1974-75	45	14	3.21	428-112							203	12-16	
DT125	125	1976	45	15	3.00	428-114							203	12-16	
DT125	125	1978	49	15	3.27	428-118	2-2113	49					203	12-16	
DT125	125	1979-81	49	14	3.50	428-118	2-2113	49					203	12-16	
IT125	125	1980-81	46	12	3.83	520-100							301	11-13	
MX125	125	1974-75	47	15	3.13	428-116							203	12-16	
MX125	125	1976	45	14	3.21	428-114							203	12-16	
RD125	125	1974-76	39	14	2.79	428-110							203	12-16	
TA125	125	1974	36	17	2.12	428-110							203	12-16	
TTR125 L/LE	125	2002-15	54	13	4.15	428-122	2-2098	49,54					206	13-15	
TTR125-E	125	2002-09	49	13	3.77	428-116	2-2098	49,54					206	13-15	
TZ125	125	1980	35	16	2.19	428-108	2-2103	42,47,50,52,55					203	12-16	
XT125	125	1982-83	54	14	3.86	428-120	2-2103	42,47,50,52,55					206	13-15	
XT125C	125	1983	54	14	3.86	428-120	2-2103	42,47,50,52,55					206	13-15	
YA6	125	1966	39	15	2.60	428-116							203	12-16	
YAS 1C	125	1968	39	15	2.60	428-104							203	12-16	

SUNSTAR

YAMAHA

For the complete Sunstar part numbers:

Combine the Appl code for your desired product with the number of teeth.

EXAMPLE:	APPL CODE	TEETH #	2-355943

YAMAHA

MODEL	OE GEARING INFO						REAR						FRONT		
YAMAHA	CC	Years	Rear	CS	Ratio	Chain Links	Steel Appl Code	# Teeth	Alum Appl Code	# Teeth	Works Z Appl Code	# Teeth	CS Appl Code	# Teeth	Comments / Notes
YFM125 Breeze	125	1989-04	32	12	2.67	520-74	2-3123	32					315	10,12-17	
YFM125G Grizzly	125	2004-13	32	12	2.67	520-74	2-3123	32					315	10,12-17	
YFM125 Raptor	125	2011-13	48	14	3.43	428-							206	13-15	
YT125 Tri Moto	125	1980-81	49	13	3.77	428-60							203	12-16	
YT125 Tri Moto	125	1982-85	39	11	3.55	520-48							301	11-13	
YZ125	125	1974-75	47	14	3.36	428-112							203	12-16	
YZ125	125	1976	45	14	3.21	428-110							203	12-16	
YZ125X	125	1976	46	12	3.83	520-98							301	11-13	
YZ125	125	1977-79	51	12	4.25	520-104							301	11-13	
YZ125	125	1980	48	12	4.00	520-102	2-3685	44,48-52					301	11-13	
YZ125	125	1981-82	46	12	3.83	520-104	2-3685	44,48-52					301	11-13	
YZ125	125	1983	48	12	4.00	520-106	2-3685	44,48-52					301	11-13	
YZ125	125	1984	48	12	4.00	520-110	2-3685	44,48-52					301	11-13	
YZ125	125	1985	52	12	4.33	520-114	2-3685	44,48-52					301	11-13	
YZ125	125	1986	50	13	3.85	520-112	2-3685	44,48-52					301	11-13	
YZ125	125	1987	50	13	3.85	520-112	2-3685	44,48-52					345	12-14	
YZ125	125	1988	49	13	3.77	520-112	2-3685	44,48-52					345	12-14	
YZ125	125	1989-92	51	13	3.92	520-116	2-3685	44,48-52					345	12-14	
YZ125	125	1993-95	50	13	3.85	520-116	2-3685	44,48-52					345	12-14	
YZ125	125	1996	50	13	3.85	520-112	2-3685	44,48-52					345	12-14	
YZ125	125	1997-98	48	13	3.69	520-112	2-3685	44,48-52					345	12-14	
YZ125	125	1999-01	48	13	3.69	520-112	2-3592	40,45-52	5-3592	43-54*	8-3592	48E-52E	345	12-14	*indicates Blk Ano Avail in 48-52t
YZ125	125	2002-04	49	13	3.77	520-112	2-3592	40,45-52	5-3592	43-54*	8-3592	48E-52E	345	12-14	*indicates Blk Ano Avail in 48-52t
YZ125	125	2005-08	48	13	3.69	520-112	2-3592	40,45-52	5-3592	43-54*	8-3592	48E-52E	388	12-14	*indicates Blk Ano Avail in 48-52t
YZ125	125	2009-11	48	13	3.69	520-114	2-3592	40,45-52	5-3592	43-54*	8-3592	48E-52E	388	12-14	*indicates Blk Ano Avail in 48-52t
YZ125	125	2012-16	48	13	3.69	520-112	2-3592	40,45-52	5-3592	43-54*	8-3592	48E-52E	388	12-14	*indicates Blk Ano Avail in 48-52t
CT1	175	1969	45	15	3.00	428-114							203	12-16	
CT1	175	1970-72	45	15	3.00	428-112							203	12-16	
CT2	175	1970-72	45	15	3.00	428-112							203	12-16	
CT3	175	1970-72	45	15	3.00	428-112							203	12-16	
DT175	175	1974-76	45	16	2.81	428-112							203	12-16	
DT175	175	1978-81	49	16	3.06	428-118	2-2113	49					203	12-16	
IT175	175	1977-79	41	12	3.42	520-96							301	11-13	
IT175	175	1980-82	44	12	3.67	520-100	2-3685	44,48-52					301	11-13	
IT175	175	1983	44	12	3.67	520-104	2-3685	44,48-52					301	11-13	
MX175	175	1974	47	14	3.36	428-112							203	12-16	
MX175	175	1975	49	14	3.50	428-118	2-2113	49					203	12-16	
MX175	175	1979-81	49	15	3.27	428-118	2-2113	49					203	12-16	
TY175	175	1975	51	12	4.25	428-114	2-2103	42,47,50,52,55					203	12-16	
TY175	175	1976	51	13	3.92	428-114	2-2103	42,47,50,52,55					203	12-16	
YT175 Tri Moto	175	1982-83	39	11	3.55	520-48							301	11-13	
YZ175	175	1976	44	12	3.67	520-96							301	11-13	
RT180	180	1990-92	51	14	3.64	428-122	2-2113	49					203	12-16	
RT180	180	1993	51	14	3.64	428-120							203	12-16	
RT180	180	1995-98	51	14	3.64	428-120							203	12-16	
YCS1	180	1968	37	15	2.47	428-106							203	12-16	
SR185 Exciter	185	1981-82	44	15	2.93	428-118							206	13-15	
BW200 Big Wheel	200	1985-86	37	14	2.64	520-74							301	11-13	
BW200E Big Wheel	200	1986-88	37	14	2.64	520-74							301	11-13	
CS3	200	1970-71	40	14	2.86	428-106							203	12-16	
CS5	200	1972	39	14	2.79	428-106							203	12-16	
IT200	200	1984-86	44	12	3.67	520-106	2-3685	44,48-52					301	11-13	
RD200	200	1974-76	36	14	2.57	428-108							203	12-16	
TW200 Trailway	200	1987-94	50	14	3.57	428-126	2-2103	42,47,50,52,55					213	14,15	
TW200 Trailway	200	1995-15	50	14	3.57	428-122	2-2103	42,47,50,52,55					213	14,15	
WR200R	200	1992	52	13	4.00	520-116							345	12-14	

SUNSTAR

YAMAHA

For the complete Sunstar part numbers:

Combine the Appl code for your desired product with the number of teeth.

EXAMPLE:	APPL CODE	TEETH #	2-355943

YAMAHA

MODEL	OE GEARING INFO						REAR						FRONT		
YAMAHA	CC	Years	Rear	CS	Ratio	Chain Links	Steel Appl Code	# Teeth	Alum Appl Code	# Teeth	Works Z Appl Code	# Teeth	CS Appl Code	# Teeth	Comments / Notes
XT200	200	1982-83	47	15	3.13	428-118	2-2103	42,47,50,52,55					206	13-15	
XT200C	200	1983	47	15	3.13	428-118	2-2103	42,47,50,52,55					206	13-15	
YFS200 Blaster	200	1986-06	40	13	3.08	520-92	2-3679	40-44,46,48	5-3679	40			349	12-14	
YTM200 Tri Moto	200	1983-85	42	11	3.82	520-60							330	11	
TT225	225	1986-87	50	14	3.57	428-124	2-2104	45,50					206	13-15	
TTR225-R	225	1999-04	58	15	3.87	428-128							206	13-15	
XT225 Serow	225	1992-07	45	15	3.00	428-120	2-2104	45,50					206	13-15	
TTR230	230	2005-15	49	13	3.77	520-106	2-3592	40,45-52	5-3592	43-54*	8-3592	48E-52E	349	12-14	*Indicates Blk Ano Avail in 48-52t;
															must use tapered head bolts on rear sprocket
DS6B	250	1970	40	15	2.67	525-92							511	13-18	525>530 Conversion
DS6C	250	1969	40	14	2.86	525-92							511	13-18	525>530 Conversion
DS7	250	1972	40	15	2.67	525-92							511	13-18	525>530 Conversion
DT1	250	1968	44	15	2.93	520-110							325	12-16	
DT1	250	1970	44	14	3.14	520-102							325	12-16	
DT1-B	250	1969	44	15	2.93	520-100							325	12-16	
DT1-E	250	1971	39	14	2.79	520-100							325	12-16	
DT1-MX	250	1970	44	14	3.14	520-102							325	12-16	
DT1-MX	250	1971	39	14	2.79	520-100							325	12-16	
DT1-S	250	1969	44	15	2.93	520-100							325	12-16	
DT2	250	1972	44	14	3.14	520-102							325	12-16	
DT250	250	1974-76	47	14	3.36	520-104							325	12-16	
DT250	250	1977-79	47	14	3.36	520-104							315	10,12-17	
DT2-MX	250	1972	51	15	3.40	520-106							325	12-16	
DT3	250	1973	44	14	3.14	520-102							325	12-16	
IT250	250	1977	46	13	3.54	520-104	2-3679	40-44,46,48	5-3679	40			315	10,12-17	
IT250	250	1978	46	14	3.29	520-104	2-3679	40-44,46,48	5-3679	40			315	10,12-17	
IT250	250	1979-80	48	13	3.69	520-102	2-3679	40-44,46,48	5-3679	40			315	10,12-17	
IT250	250	1981-82	50	13	3.85	520-108	2-3685	44,48-52					315	10,12-17	
IT250	250	1983	48	13	3.69	520-110	2-3685	44,48-52					315	10,12-17	
MX250	250	1973-74	51	15	3.40	520-106							325	12-16	
MX250	250	1975	50	13	3.85	520-106	2-3679	40-44,46,48	5-3679	40			325	12-16	
RD250	250	1973-75	40	15	2.67	530-92							511	13-18	
SR250 Exciter I	250	1980-82	46	16	2.88	520-103	2-3103	46					315	10,12-17	
SR250T Exciter II	250	1981	46	16	2.88	520-103	2-3103	46					315	10,12-17	
SRX250	250	1987	43	14	3.07	520-106	2-3103	46							
TT250	250	1980	51	15	3.40	520-100	2-3103	46					315	10,12-17	
TT250	250	1981-82	49	14	3.50	520-100	2-3103	46					315	10,12-17	
TTR250-R	250	1999-06	52	13	3.69	520-110	2-3685	44,48-52					3A0	12,13	
TY250	250	1974	53	14	3.79	428-114	2-2104	45,50					203	12-16	
TY250	250	1976-77	53	14	3.79	428-114	2-2104	45,50					203	12-16	
WR250F	250	2001-06	52	13	4.00	520-114	2-3592	40,45-52	5-3592	43-54*	8-3592	48E-52E	388	12-14	*Indicates Blk Ano Avail in 48-52t
WR250F	250	2007-15	50	13	3.85	520-114	2-3592	40,45-52	5-3592	43-54*	8-3592	48E-52E	388	12-14	*Indicates Blk Ano Avail in 48-52t
WR250R	250	2008-15	43	13	3.31	520-108	2-3592	40,45-52	5-3592	43-54*	8-3592	48E-52E	388	12-14	*Indicates Blk Ano Avail in 48-52t;
															Must use countersunk mounting bolts with rear sprocket
WR250X	250	2008-11	42	13	3.23	520-108	2-3592	40,45-52	5-3592	43-54*	8-3592	48E-52E	388	12-14	*Indicates Blk Ano Avail in 48-52t;
															Must use countersunk mounting bolts with rear sprocket
WR250Z	250	1991-97	52	14	3.71	520-116	2-3685	44,48-52					315	10,12-17	
XT250	250	2008-16	48	15	3.20	428-128	2-2502	45,48					235	15,16	
XT250	250	1980-83	47	15	3.13	520-98	2-3103	46					315	10,12-17	
XT250	250	1984	48	15	3.20	520-106	2-3103	46							
XT250C	250	1983	47	15	3.13	520-98	2-3103	46					315	10,12-17	
XT250C	250	1984	48	15	3.20	520-106	2-3103	46							
XV250 RT 66	250	1988-90	45	16	2.81	520-113	2-3538	38,40,42,45					315	10,12-17	
XV250 Virago	250	1995-08	45	16	2.81	520-113	2-3538	38,40,42,45					315	10,12-17	
XV250 V-Star	250	2009-15	45	16	2.81	520-114	2-3538	38,40,42,45					315	10,12-17	
YDS5	250	1967	41	15	2.73	525-92							511	13-18	525>530 Conversion

SUNSTAR

YAMAHA

For the complete Sunstar part numbers:

Combine the Appl code for your desired product with the number of teeth.

EXAMPLE:	APPL CODE	TEETH #	2-355943

YAMAHA

MODEL	OE GEARING INFO						REAR						FRONT		
YAMAHA	CC	Years	Rear	CS	Ratio	Chain Links	Steel Appl Code	# Teeth	Alum Appl Code	# Teeth	Works Z Appl Code	# Teeth	CS Appl Code	# Teeth	Comments / Notes
YFM250 Raptor	250	2008-13	38	14	2.71	520-92	2-3540	38-42	5-3540	37-40					
YTZ250 Tri Moto	250	1985-86	44	13	3.38	520-98	2-3679	40-44,46,48	5-3679	40			315	10,12-17	
YZ250	250	1974	50	13	3.85	520-106	2-3679	40-44,46,48	5-3679	40			325	12-16	
YZ250	250	1975	52	13	4.00	520-106	2-3679	40-44,46,48	5-3679	40			325	12-16	
YZ250	250	1976	50	13	3.85	520-106	2-3679	40-44,46,48	5-3679	40			325	12-16	
YZ250	250	1977	54	13	4.15	520-108	2-3679	40-44,46,48	5-3679	40			325	12-16	
YZ250	250	1978-79	48	13	3.69	520-108	2-3679	40-44,46,48	5-3679	40			325	12-16	
YZ250	250	1980	48	13	3.69	520-106	2-3685	44,48-52					315	10,12-17	
YZ250	250	1981	48	14	3.43	520-110	2-3685	44,48-52					315	10,12-17	
YZ250	250	1982	45	13	3.46	520-110	2-3685	44,48-52					315	10,12-17	
YZ250	250	1983-84	48	13	3.69	520-112	2-3685	44,48-52					315	10,12-17	
YZ250	250	1985-86	50	14	3.57	520-114	2-3685	44,48-52					315	10,12-17	
YZ250	250	1987-90	49	14	3.50	520-114	2-3685	44,48-52					315	10,12-17	
YZ250 WR	250	1989	49	14	3.50	520-114	2-3685	44,48-52					315	10,12-17	
YZ250 WR	250	1990	51	14	3.64	520-116	2-3685	44,48-52					315	10,12-17	
YZ250	250	1991-93	49	14	3.50	520-116	2-3685	44,48-52					315	10,12-17	
YZ250	250	1994-97	49	13	3.77	520-114	2-3685	44,48-52					315	10,12-17	
YZ250	250	1999-16	50	14	3.85	520-114	2-3592	40,45-52	5-3592	43-54*	8-3592	48E-52E	325	12-16	*Indicates Blk Ano Avail in 48-52t
YZ250F	250	2001-06	48	13	3.69	520-112	2-3592	40,45-52	5-3592	43-54*	8-3592	48E-52E	388	12-14	*Indicates Blk Ano Avail in 48-52t
YZ250F	250	2007-08	49	13	3.77	520-112	2-3592	40,45-52	5-3592	43-54*	8-3592	48E-52E	388	12-14	*Indicates Blk Ano Avail in 48-52t
YZ250F	250	2009-11	49	13	3.77	520-114	2-3592	40,45-52	5-3592	43-54*	8-3592	48E-52E	388	12-14	*Indicates Blk Ano Avail in 48-52t
YZ250F	250	2012-16	50	13	3.85	520-114	2-3592	40,45-52	5-3592	43-54*	8-3592	48E-52E	388	12-14	*Indicates Blk Ano Avail in 48-52t
YZ250FX	250	2015	51	13	3.92	520-114	2-3592	40,45-52	5-3592	43-54*	8-3592	48E-52E	388	12-14	*Indicates Blk Ano Avail in 48-52t
YZ250X	250	2016	50	14	3.85	520-114	2-3592	40,45-52	5-3592	43-54*	8-3592	48E-52E	388	12-14	*Indicates Blk Ano Avail in 48-52t
BW350 Big Wheel	350	1987-88	37	14	2.64	520-76							301	11-13	
R3	350	1969	39	15	2.60	530-98							511	13-18	
R5	350	1970-72	40	15	2.67	525-92							511	13-18	525>530 Conversion
RD350	350	1973-75	40	15	2.67	530-92							511	13-18	
RZ350	350	1984-85	40	17	2.35	520-106							315	10,12-17	
RZ350C	350	1985	40	17	2.35	520-106							315	10,12-17	
TT350	350	1986-87	50	14	3.57	520-108	2-3685	44,48-52					316	14,15	
TY350	350	1985	42	12	3.50	520-96							315	10,12-17	
TY350	350	1986	35	10	3.50	520-92							315	10,12-17	
XT350	350	1985-00	55	19	2.89	428-130	2-2103	42,47,50,52,55					218	19	
YFM350 Raptor	350	2004-13	38	13	2.92	520-98	2-3540	38-42	5-3540	37-40			315	10,12-17	
YFM350X Warrior	350	1987-88	40	13	3.08	520-100	2-3538	38,40,42,45					315	10,12-17	
YFM350X Warrior	350	1989-04	40	13	3.08	520-98	2-3679	40-44,46,48	5-3679	40			315	10,12-17	
YFZ350 Banshee	350	1987-88	40	13	3.08	520-100	2-3538	38,40,42,45					315	10,12-17	
YFZ350 Banshee	350	1989-06	41	14	2.93	520-104	2-3679	40-44,46,48	5-3679	40			315	10,12-17	
YM2C	350	1967	41	15	2.73	525-98							511	13-18	525>530 Conversion
DT360	360	1974	44	15	2.93	520-104							325	12-16	
MX360	360	1973-74	51	15	3.40	520-106							325	12-16	
RT1	360	1970-71	39	14	2.79	520-102							325	12-16	
RT1-M	360	1970	44	14	3.14	520-110							325	12-16	
RT1-MX	360	1971	44	14	3.14	520-110							325	12-16	
RT2	360	1972	39	15	2.60	520-102							325	12-16	
RT2-MX	360	1972	51	15	3.40	520-106							325	12-16	
RT3	360	1973	39	15	2.60	520-102							325	12-16	
YZ360	360	1974-75	48	15	3.20	520-104	2-3679	40-44,46,48	5-3679	40			325	12-16	
DT400	400	1975-76	47	14	3.36	520-114							325	12-16	
DT400	400	1977	40	16	2.50	520-102	2-3679	40-44,46,48	5-3679	40			325	12-16	
DT400	400	1978	43	16	2.69	520-102	2-3679	40-44,46,48	5-3679	40			325	12-16	
IT400	400	1976-78	46	15	3.07	520-104	2-3679	40-44,46,48	5-3679	40			325	12-16	
IT400	400	1979	46	14	3.29	520-102	2-3679	40-44,46,48	5-3679	40			325	12-16	
MX400	400	1975	50	14	3.57	520-106	2-3679	40-44,46,48	5-3679	40			325	12-16	
WR400F	400	1998	50	14	3.57	520-114	2-3685	44,48-52					325	12-16	

SUNSTAR

YAMAHA

For the complete Sunstar part numbers:

Combine the Appl code for your desired product with the number of teeth.

EXAMPLE:	APPL CODE	TEETH #	2-355943

YAMAHA

MODEL	OE GEARING INFO						REAR						FRONT		
YAMAHA	CC	Years	Rear	CS	Ratio	Chain Links	Steel Appl Code	# Teeth	Alum Appl Code	# Teeth	Works Z Appl Code	# Teeth	CS Appl Code	# Teeth	Comments / Notes
WR400F	400	1999-00	50	14	3.57	520-114	2-3592	40,45-52	5-3592	43-54*	8-3592	48E-52E	325	12-16	*Indicates Blk Ano Avail in 48-52t
XS400 Maxim	400	1982-83	35	16	2.19	530-100							502	16	
XS400R Seca	400	1982-83	38	16	2.38	530-102							502	16	
YZ400	400	1976-77	50	14	3.57	520-106	2-3679	40-44,46,48	5-3679	40			325	12-16	
YZ400	400	1978-79	50	14	3.57	520-108	2-3679	40-44,46,48	5-3679	40			325	12-16	
YZ400F	400	1998	49	14	3.50	520-114	2-3685	44,48-52					325	12-16	
YZ400F	400	1999	49	14	3.50	520-114	2-3592	40,45-52	5-3592	43-54*	8-3592	48E-52E	325	12-16	*Indicates Blk Ano Avail in 48-52t
IT425	425	1980	46	14	3.29	520-102	2-3679	40-44,46,48	5-3679	40			315	10,12-17	
WR426F	426	2001-02	50	14	3.57	520-114	2-3592	40,45-52	5-3592	43-54*	8-3592	48E-52E	325	12-16	*Indicates Blk Ano Avail in 48-52t
YZ426F	426	1999-02	49	14	3.50	520-114	2-3592	40,45-52	5-3592	43-54*	8-3592	48E-52E	325	12-16	*Indicates Blk Ano Avail in 48-52t
WR450F	450	2003-06	50	14	3.57	520-114	2-3592	40,45-52	5-3592	43-54*	8-3592	48E-52E	325	12-16	*Indicates Blk Ano Avail in 48-52t
WR450F	450	2007-15	50	13	3.85	520-114	2-3592	40,45-52	5-3592	43-54*	8-3592	48E-52E	325	12-16	*Indicates Blk Ano Avail in 48-52t
YFZ450	450	2004-13	38	14	2.71	520-98	2-3540	38-42	5-3540	37-40			325	12-16	
YFZ450R / SE	450	2009-16	38	14	2.71	520-98	2-3540	38-42	5-3540	37-40			3B6	13-15	
YFZ450X	450	2010-11	38	14	2.71	520-98	2-3540	38-42	5-3540	37-40			3B6	13-15	
YZ450F	450	2003-04	48	14	3.43	520-114	2-3592	40,45-52	5-3592	43-54*	8-3592	48E-52E	325	12-16	*Indicates Blk Ano Avail in 48-52t
YZ450F	450	2005	51	14	3.64	520-114	2-3592	40,45-52	5-3592	43-54*	8-3592	48E-52E	325	12-16	*Indicates Blk Ano Avail in 48-52t
YZ450F	450	2006-09	49	13	3.77	520-114	2-3592	40,45-52	5-3592	43-54*	8-3592	48E-52E	325	12-16	*Indicates Blk Ano Avail in 48-52t
YZ450F	450	2010-13	48	13	3.69	520-114	2-3592	40,45-52	5-3592	43-54*	8-3592	48E-52E	325	12-16	*Indicates Blk Ano Avail in 48-52t
YZ450F	450	2014	49	13	3.77	520-114	2-3592	40,45-52	5-3592	43-54*	8-3592	48E-52E	325	12-16	*Indicates Blk Ano Avail in 48-52t
YZ450F	450	2015-16	48	13	3.69	520-114	2-3592	40,45-52	5-3592	43-54*	8-3592	48E-52E	325	12-16	*Indicates Blk Ano Avail in 48-52t
IT465	465	1981-82	44	14	3.14	520-108	2-3685	44,48-52					315	10,12-17	
YZ465	465	1980	46	14	3.29	520-108	2-3679	40-44,46,48	5-3679	40			315	10,12-17	
YZ465	465	1981	46	14	3.29	520-108	2-3685	44,48-52					315	10,12-17	
IT490	490	1983-84	44	14	3.14	520-110	2-3685	44,48-52					315	10,12-17	
YZ490	490	1982	44	14	3.14	520-110	2-3685	44,48-52					315	10,12-17	
YZ490	490	1983-85	46	14	3.29	520-112	2-3685	44,48-52					315	10,12-17	
YZ490	490	1986-90	48	14	3.43	520-112	2-3685	44,48-52					315	10,12-17	
SC500	500	1973	51	16	3.19	520-106							325	12-16	
SC500A	500	1974	51	16	3.19	520-106							325	12-16	
SR500	500	1978-81	44	16	2.75	530-104							511	13-18	
TT500	500	1976	52	15	3.47	520-100	2-3679	40-44,46,48	5-3679	40			325	12-16	
TT500	500	1977-81	50	15	3.33	520-104	2-3679	40-44,46,48	5-3679	40			325	12-16	
TX500	500	1973-74	43	17	2.53	530-108	2-5401	34					511	13-18	
WR500Z	500	1992-93	50	15	3.33	520-118	2-3685	44,48-52					315	10,12-17	
XS500	500	1975	43	17	2.53	530-108	2-5401	34					511	13-18	
XS500	500	1976-78	42	16	2.63	530-106							511	13-18	
XT500	500	1976-81	44	16	2.75	520-100	2-3679	40-44,46,48	5-3679	40			325	12-16	
XJ550 Maxim	550	1981-83	45	16	2.81	530-104							502	16	
XJ550R Seca	550	1981	46	16	2.88	530-104							502	16	
XJ550R Seca	550	1982-83	45	16	2.81	530-104							502	16	
XT550	550	1982-83	42	15	2.80	520-98	2-3538	38,40,42,45					316	14,15	
FJ600	600	1984-85	45	16	2.81	530-106							502	16	
FZ600	600	1986-88	46	16	2.88	530-104							502	16	
FZ600 FZ-6	600	2004-09	46	16	2.88	530-118	2-5474	42-49					519	15-17	
FZ600 FZ-6	600	2004-09	46	16	2.88	530-118			5-3477	39-49			394	15,16	530>520 Conversion
FZ-6R	600	2009-15	46	16	2.88	520-118	2-3610	46					3B4	16	
FZR600	600	1989	46	15	3.07	530-106	2-5544	45					511	13-18	
FZR600R	600	1990-99	45	15	3.00	530-106	2-5544	45					511	13-18	
SRX600	600	1986	37	15	2.47	520-104							316	14,15	
TT600	600	1983-86	50	14	3.57	520-112	2-3685	44,48-52					316	14,15	
XT600	600	1984-89	42	15	2.80	520-104	2-3538	38,40,42,45					316	14,15	
XT600E	600	1990-95	45	15	3.00	520-106	2-3538	38,40,42,45							
YX600 Radian	600	1986-87	44	16	2.75	530-104							502	16	
YX600 Radian	600	1988-90	45	16	2.81	530-104							502	16	
YZF600R	600	1994-07	47	15	3.13	530-108	2-5601	47-49					511	13-18	

SUNSTAR

YAMAHA

For the complete Sunstar part numbers:

Combine the Appl code for your desired product with the number of teeth.

EXAMPLE:	APPL CODE	TEETH #	2-355943

YAMAHA

MODEL	OE GEARING INFO						REAR						FRONT		
YAMAHA	CC	Years	Rear	CS	Ratio	Chain Links	Steel Appl Code	# Teeth	Alum Appl Code	# Teeth	Works Z Appl Code	# Teeth	CS Appl Code	# Teeth	Comments / Notes
YZF-R6	600	1999-02	48	16	3.00	532-116	2-5482	48					519	15-17	532>530 Conversion
YZF-R6	600	2003-05	48	16	3.00	532-116	2-5474	42-49					519	15-17	532>530 Conversion
YZF-R6	600	2003-05	48	16	3.00	532-116			5-3477	39-49			394	15,16	532>520 Conversion
YZF-R6	600	2006-15	45	16	2.81	525-114	2-4473	44-46					414	15,16	
YZF-R6	600	2006-15	45	16	2.81	525-114			5-3477	39-49			3A7	15,16	525>520 Conversion
YZF-R6S	600	2006-09	48	16	3.00	532-116	2-5474	42-49					519	15-17	532>530 Conversion
YZF-R6S	600	2006-09	48	16	3.00	532-116			5-3477	39-49			394	15,16	532>520 Conversion
TX650	650	1973-75	34	17	2.00	530-108	2-5401	34					510	17	
XS1	650	1970	34	17	2.00	530-98	2-5401	34					510	17	
XS1-B	650	1971	34	17	2.00	530-98	2-5401	34					510	17	
XS2	650	1972	34	17	2.00	530-98	2-5401	34					510	17	
XS650 Special II	650	1975-81	34	17	2.00	530-104	2-5401	34					510	17	
XS650-2	650	1979	34	17	2.00	530-104	2-5401	34					510	17	
XS650S Heritage	650	1978-83	34	17	2.00	530-104	2-5401	34					510	17	
YFM660R Raptor	660	2001-05	40	13	3.08	520-92	2-3679	40-44,46,48	5-3679	40			325	12-16	
FZ-07	700	2015-16	43	16	2.69	525-108	2-4472	43-46					421	16	
FZ700	700	1987	46	16	2.88	530-112	2-5544	45					519	15-17	
FZX700 Fazer	700	1986-87	44	16	2.75	530-108	2-5544	45					519	15-17	
YFM700 Raptor	700	2006-16	38	14	2.71	520-98	2-3540	38-42	5-3540	37-40			3B6	13-15	
YFM700R Raptor SE	700	2010-16	38	14	2.71	520-98	2-3540	38-42	5-3540	37-40			3B6	13-15	
FZ750	750	1985-86	45	16	2.81	530-110	2-5544	45					519	15-17	
FZ750	750	1988	43	16	2.69	530-110	2-5544	45					519	15-17	
FZ750C	750	1986	45	16	2.81	530-110	2-5544	45					519	15-17	
FZR750R	750	1988	42	17	2.47	530-108	2-5601	47-49					519	15-17	
TX750	750	1973-74	40	17	2.35	530-105	2-5401	34					510	17	
YZF750R	750	1994	43	16	2.69	532-106	2-5601	47-49					519	15-17	532>530 Conversion
YZF750R	750	1995-98	43	16	2.69	532-106	2-5601	47-49					519	15-17	532>530 Conversion
FZ-8	800	2011-13	46	16	2.88	525-	2-4595	46					421	16	
TDM850	850	1992-93	44	16	2.75	525-114							325	12-16	525>520 Conversion
FJ-09	900	2015	45	16	2.81	525-110	2-4473	44-46					421	16	Sunstar Rear Sprocket is Silver Color
FZ-09	900	2014-15	45	16	2.81	525-110	2-4473	44-46					421	16	Sunstar Rear Sprocket is Silver Color
FZR1000	1000	1987-88	47	16	2.94	532-110	2-5601	47-49					519	15-17	532>530 Conversion
FZR1000	1000	1989-95	47	17	2.76	532-110	2-5601	47-49					519	15-17	532>530 Conversion
FZS1000 FZ-1	1000	2001-03	44	16	2.75	530-114	2-5474	42-49					517	16,17	
FZS1000 FZ-1	1000	2001-03	44	16	2.75	530-114			5-3477	39-49			395	15-17	530>520 Conversion
FZS1000 FZ-1	1000	2004-05	44	16	2.75	530-116	2-5474	42-49					517	16,17	
FZS1000 FZ-1	1000	2004-05	44	16	2.75	530-116			5-3477	39-49			395	15-17	530>520 Conversion
FZS1000 FZ-1	1000	2006-14	45	17	2.65	530-122	2-5474	42-49					517	16,17	
FZS1000 FZ-1	1000	2006-14	45	17	2.65	530-122			5-3477	39-49			395	15-17	530>520 Conversion
FZS-1	1000	2015	45	17	2.65	530-122			5-3477	39-49			517	15-17	
FZS-1	1000	2015	45	17	2.65	530-122			5-3477	39-49			395	15-17	530>520 Conversion
GTS1000	1000	1993-94	47	17	2.76	532-118	2-5601	47-49					519	15-17	532>530 Conversion
YZF-R1	1000	1998-03	43	16	2.69	530-114	2-5474	42-49					517	16,17	
YZF-R1	1000	1998-03	43	16	2.69	530-114			5-3477	39-49			395	15-17	530>520 Conversion
YZF-R1	1000	2004-05	45	17	2.65	530-116	2-5474	42-49					517	16,17	
YZF-R1	1000	2004-05	45	17	2.65	530-116			5-3477	39-49			395	15-17	530>520 Conversion
YZF-R1	1000	2006-08	45	17	2.65	530-118	2-5474	42-49					517	16,17	
YZF-R1	1000	2006-08	45	17	2.65	530-118			5-3477	39-49			395	15-17	530>520 Conversion
YZF-R1 /LE	1000	2009-14	47	17	2.76	530-120	2-5474	42-49					517	16,17	
YZF-R1 /LE	1000	2009-14	47	17	2.76	530-120			5-3477	39-49			395	15-17	530>520 Conversion
YZF-R1 SP	1000	2006	45	17	2.65	530-116	2-5474	42-49					517	16,17	
YZF-R1 SP	1000	2006	45	17	2.65	530-116			5-3477	39-49			395	15-17	530>520 Conversion
FJ1100	1100	1984-85	42	17	2.47	530-110	2-5601	47-49					517	16,17	
FJ1200	1200	1986-87	41	17	2.41	530-110	2-5601	47-49					517	16,17	
FJ1200	1200	1989-92	40	17	2.35	530-110	2-5601	47-49					517	16,17	
FJ1200A	1200	1992-93	40	17	2.35	530-110	2-5601	47-49					517	16,17	
MT-01	1670	2005-11	39	17	2.30	530-114	2-5474	42-49					517	16,17	

KEIHIN & MIKUNI Genuine vs Copy Carburetors

Mikuni VM: Here is a comparison between a Genuine and a copy of a Mikuni VM carburetor. The fake carburetor has the "Minkui" imprinted on the top and side of the carburetor. On a genuine carburetor you will find the "Mikuni" logo. Also you will notice that the fake carburetor doesn't have the "NOT FOR AIRCRAFT USE" decal and the anchor plates. The way the fake carburetor was designed is completely different from the genuine one. You can see that there are extra openings and attachments.

Genuine

Copy

Genuine

Copy

Copy

Mikuni HSR: You can see the top cover has a different design compared to the genuine. Also you can locate the size of the carburetor and the "Mikuni" logo on the genuine while the fake carburetor doesn't show it at all. The fake carb is missing the "Assembled in Mexico" decal.

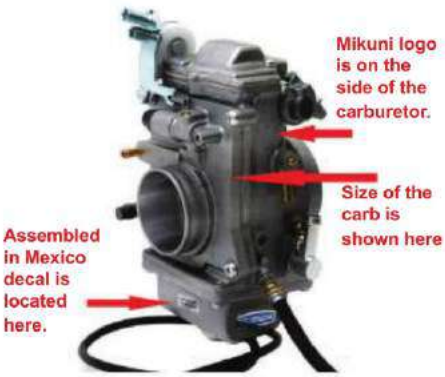

Copy

Genuine

Copy

Genuine

Genuine PWK: A serial number is lightly imprinted below the PWK mark. The hoses should be a dark pink PLAS TECH hose. A "Motorcycle Race Use Only" label will be placed below the Keihin logo. Also various Quality Control marks should be visible. Genuine Keihin Jets should also have the jet size imprinted to the jet.

Copy PWK: A copy of the PWK carburetor will have an unmarked light hose. The serial number will be darker than the genuine carburetor. There's no label indicating that the carburetor is for "Motorcycle Race Use Only" and a "SUDOO" decal is placed below the Keihin logo instead of a "Sudco" decal. You will also notice that there won't be any black, green, and orange Quality Control marks. The jets and needles tend to be unmarked in these type of carburetors as well.

#	
11-Slot T-Handle Rack, Motion Pro	500
13mm Valve Adjustment Shims	33, 344
2-Stroke Leakdown Tester, Motion Pro	501
2-Stroke Racing Oil, Redline	489
25mm Valve Adjustment Shims	34, 345
29.5mm Valve Adjustment Shims	36, 347
29mm Valve Adjustment Shims	35, 346
3 PC.T-Handle Phillips Set, Motion Pro	500
4-Stroke Alcohol Fuel Lube, Redline	490
4-Stroke Leakdown Tester, Motion Pro	501
40° Cable Adjuster Assembly	202
45° Cable Adjuster	202
5 PC. Mini-Pro T-Handles, Motion Pro	500
6 PC. Racer T-Handles Set, Motion Pro	500
7 PC. Metric T-Handles, Motion Pro	500
7 Way Crimping Tool (CT-1)	95, 499
7.50mm Valve Adjustment Shims	342, 523
80W Motorcycle Gear Oil with ShockProof, Red Line	490
9.50mm Valve Adjustment Shims	343, 523
90-Degree 1/4" Hex Driver, Motion Pro	495
90° Cable Adjuster Assembly	142, 202
A	
Accelerator Pump Cover	231
Accelerator Pump Nozzles, Mikuni HSR	172
Accelerator Pump Rebuild Kit	20, 114, 116
Accelerator Pump Rebuild Kit	231-232
Accelerator Pump Rebuild Kit, K&L	20
Accessories for Sync Pro Carburetor Tuner	493
Action Hose Clamps, K&L	269
Adjustable Cam Sprocket Assemblies, APE	44, 360-361
Air Box Adapters & Manifolds	218
Air Box Adapter Kit, HSR	173
Air Box Complete, Kawasaki H2-750	9
Air Box, Kawasaki Z1 900 73-75 Replica	9
Air Cleaner Adapter O-Ring, Keihin FCR	122
Air Cut-Off Valve Set, FCR-MX	116
Air Cut-Off Valve Set, K&L	20
Air Cut-Off Valve Sets, K&S	223-236
Air Filters & Chrome Covers, (TM40)	187
Air Filter, Adapters & Adapter O-Ring, FCR	121-122
Air Filter Cleaner & Degreaser, K&N	9, 278,491
Air Filter Gasket, PC Racing Pro Seal	280
Air Filter Mounting Bracket, HSR	174
Air Filters, EMGO Clamp-On Universal	279
Air Filter Sets, K&N Custom Clamp On	275-278
Air Filter Skins, PC Racing	280
Air Filters, K&N	271-278
Air Filters, K&N ATV OE Replacement	273

A	
Air Filters, K&N OE Replacement	8, 271-272
Air Filters, K&N Universal Clamp-On	278
Air Filters, OEM Type Replacement	8
Air Filters, PC Racing Flo	280
Air/Fuel Ratio Monitor, K&N	237
Air Mixture Screw, Zip-Ty	149, 214, 238
All-In-One RTV Silicone	485
Alternator Block Off Cover, APE	365
Aluminum Body Fuel Filters	269
Amal to Mikuni Rubber Mounting Flanges	220
Anaerobic Thread Locks, Three Bond	354, 483
Assembly Lube, Redline	490
ATV & Offroad Throttle Cables, Motion Pro	447
ATV Axle Wrench, Motion Pro	499
ATV Carburetor Repair Kits	241-242
ATV Connecting Rod Kits, Vesrah	372-373, 525
ATV Disc Brake Rotors, Vesrah	465
ATV Engine Oil Seal Kits, K&S	322-323
ATV Intake Manifolds, UPP	219
ATV OEM Replacement Air Filters, K&N	273
ATV Piston Kits, Art	370
ATV Piston Kits, JE	366-368
ATV Piston Kits, Shindy Products	371
ATV Terminator Clutch Cables, Motion Pro	446
ATV Twist Throttle Kit, Motion Pro	445
Auxiliary Gas Tanks, Motion Pro	494
B	
Banshee Carburetor Cable Kits	238, 443
Base Gaskets, Vesrah	27
Battery Booster Cable Set, Motion Pro	498
Bead Popper, Motion Pro	506
BeadPro Tire Bead Breaker and Lever Tool Set	506
Billet Metal Polish	482
Black Label Chain Lube, PJ1	487
Blaster/Banshee Carburetor Caps	238, 443
Blue Label Chain Lube, PJ1	487
BN (Round Pump Carb Type), Mikuni	517-518
BN Carburetor Parts & Accessories, Mikuni	516
BN Round Pump Carb Type Exploded View, Mikuni	517
BN38/44 Carburetor Rebuild Kit, Mikuni	518
BN44I Carburetor Rebuild Kit for Yamaha, Mikuni	522
BN46I (Square Carb Type), Mikuni	521-522
BN46I Carburetor Rebuild Kit, Mikuni	522
BN46I Replacement Parts, Mikuni	521
BN46I Square Carb Type Exploded View	521
Body Parts, Vintage	74
Bolt Seals. Valve (Head) Cover	306-308

Index

B

Boyer Bransden Electronic Ignition	76, 474
Brake Bleeding Kit, Mityvac	442, 503
Brake Bleeder, Motion Pro Mini	503
Brake Bleeder, Motion Pro Hydraulic	503
Brake Caliper Pistons, Honda	60
Brake Calipers, Nissin 6-Piston	465
Brake Light Switch (Hydraulic)	446, 479
Brake Pads, Vesrah	57-58, 448-463
Brake Pedal, Z1/KZ900	61
Brake Rod, Z1/KZ900	61
Brake Shoes, Vesrah	56-57, 448-463
Brake & Wheel Tools	503
Brass T-Fittings	166, 269, 497

C

Cable Adjuster Holder, Keihin	146
Cable Lube, PJ1	65, 446, 487
Cable Luber, Motion Pro	65, 446, 498
Cable Mounting Brackets, Keihin FCR	113
California Gold Chrome Polish, Mothers	482
California Gold Natural Formula Pure Carnauba Wax, Mothers	481
California Gold Original Formula Carnauba Cleaner Wax, Mothers	481
California Gold Scratch Remover, Mothers	481
California Gold Showtime Instant Detailer, Mothers	481
Cam Chain Tensioner Pushrod Kit	44, 359
Cam Chain Tensioners, APE Manual	43, 356-358
Cam Chains, Sudco	45, 362-364
Cam Cover End Plugs, Billet	32, 346
Cam End Rubber Plugs, Vesrah	29-31, 302-305
Cam Sprocket Assemblies, APE Adjustable	43, 360-361
Camshaft End Rubber Plugs	31, 305
Carb Adapter for 1990 H-D® Models, (HS40)	187
Carb Boots, UPP	219
Carb Cleaner Wire Set, K&L	495
Carb Holder Clamp	7, 223
Carb Holder Rubber Plugs, K&L	7, 223
Carb Kits (Vintage), Keihin & Mikuni Street	4–5
Carb Kits, Keihin Street	153-154
Carb Kits, Keihin Offroad	157-159
Carb Kits, Mikuni Offroad	160
Carb Pump Diaphragm Valve Sets, K&L	19, 229
Carb Service Stand, K&L	496
Carb Slide Diaphragms, Sudco Mikuni	21, 230
Carb Synchronizer	493
Carb Vacuum Fitting Cap, Sudco	7, 223, 494
Carburetors, Individual HS40 (TM40)	179
Carburetors, Individual Mikuni HSR	172
Carburetor Float & Float Pin	15, 245-246

C

Carburetor Kits, Mikuni HSR	171
Carburetor Needle Shims, Sudco	132, 206
Carburetor O-Rings, Mikuni	227
Carburetor Rebuild Kit, Keihin HSR42/45 (Old Style)	176
Carburetor Rebuild Kits, Keihin HSR42/45/48 (New Style)	172, 178
Carburetor Rebuild Kit, Keihin PJ	142
Carburetor Rebuild Kit, Keihin PWK Snowmobile	140
Carburetor Rebuild Kit, Keihin PWK28	136
Carburetor Rebuild Kit, Keihin PWK33-41mm	138
Carburetor Rebuild Kit, Keihin PWM38	144
Carburetor Rebuild Kit, YXR 660 Rhino	244
Carburetor Rebuild Kits, Sudco	239
Carburetor Rebuild Kits, Keihin FCR	110, 114, 239
Carburetor Rebuild Kits, Keihin FCR-MX	115, 243
Carburetor Rebuild Kits, Mikuni HS40 (TM40)	186
Carburetor Rebuild Kits, Mikuni HSR42/45/48	178, 239
Carburetor Rebuild Kits, Mikuni TM 33-8012	184
Carburetor Rebuild Kits, Mikuni TM36/TM40 (HS40)	186, 239
Carburetor Repair Kits, ATV	241-242
Carburetor Repair Kits, Offroad	243-244
Carburetor Repair Kits, Vintage Street	10, 240
Carburetor Screws	227
Carburetor Tools	493-497
Carburetor Top Cap Cover Gasket, Sudco	10
Carburetor Vent Systems, PC Racing	280
Cartridge Pro Fork Fluid, PJ1	427, 488
Case Sealant Liquid Gasket TB1184, Three Bond	484
CDK Carburetor Rebuild Kits, Keihin (Watercraft)	513
CDK/CDKII Exploded View, Keihin (Watercraft)	511
CDK/CDKII Parts, Keihin (Watercraft)	512
Chain Adjuster Bolt & Nut, Kawasaki	55
Chain Lube, PJ1	487
Chain Tools	505
Chain, RK Drive	55, 410-411
Charlie's Soap	492
Choke Shaft Block-Off, Keihin (Watercraft)	513
Choke Cable Assemblies, HSR	174
Choke Cables, HSR	174
Choke Pull Assemblies. HSR	174
Chrome Carb Top, HSR	174
Chrome Gauge Covers, Kawasaki KZ	64
Chrome Plated Adapter Nuts, Pingel	263
Chrome-Moly Hex Axle Tool, Motion Pro	503
Chrome Rear Shocks for H1-500 & H2-750	60
Chrome Rear Shocks for Z1/KZ900 & KZ1000	60
Clamp-On Air Filter, EMGO Universal	279
Clear Silicone Liquid Gasket TB1212C, Three Bond	484
Clips, Sudco Fuel & Vacuum Hose	22, 269

C

Clutch Cable Adjuster, Z1	65
Clutch Cover Gaskets, Vesrah	49-50, 330-336
Clutch Lever, Motion Pro Quick Adjust MX	443
Clutch Plates, Vesrah	393-406
Clutch Springs, Vesrah	393-406
Clutch Tuner Gear Oil, PJ1	486
Coil Kits for Yamaha, Dynatek	471
Condensers	87-94
Connecting Rod Kits, ATV & Offroad	372-373
Connecting Rod Kits, Sudco Kawasaki H1 & H2	48
Connecting Rod Kits, Watercraft	525
Contact Breaker Plate Assemblies	80
Contact Points, Ignition	80-86
Control Cables	66-68, 445-446
Control Levers, OEM Type	65
Control Meter Parts	64
Control Parts	63
Coolant Recovery System	497
Copper Cylinder Head Gaskets (Watercraft)	524
Cover Bolt Seals, Valve (Rubber Parts)	309
CR Special, Keihin	123-132
Crankcase Head-Breather Kit, HSR	174
Crankcase Vent Filters, K&N Rubber and Steel Base	48, 337
Crankshaft Oil Seal Kits, Kawasaki	47
Crimping Tool, (CT-1) 7 Way	95, 496
CV Side Carburetor Cover, Mikuni N189.606	310
Cylinder Head Bolt Kit, H2-750	28
Cylinder Head Cover Bolt Seals, Kawasaki & Suzuki	31
Cylinder Head Gasket, Vesrah	27, 28, 289-291
Cylinder Head Gaskets, Kawasaki JS440	524
Cylinder Head O-Rings, Kawasaki	28, 288
Cylinder Head Studs, APE Heavy Duty	354

D

Dealer Jet Kit (Main & Slow), Genuine Keihin	134
Dealer Main and Pilot Jet Kit, Mikuni	215
Dealer Main Jet Kits, Keihin	151
Dealer Main Jet Kits, Mikuni	215
Decal, FCR 35, 39, and 41	114
Decal Sets (Vintage)	74
Deluxe Suspension Bearing Service Tool, Motion Pro	507
Disc Brake Rotor, Front (Vintage)	62
Disc Brake Rotors, Sunstar	465
Drive Chain, RK	55, 410-411
DT1-250 Fork Tube Piston (Vintage)	56
DT1-250/RT1-360 Tail Light Lens (Vintage)	99
Dust Seal Kits, K&S Fork	412-425
Dynatek (Dyna)	
2000 Digital Performance (Vintage)	*76*

E

3000 Digital Performance Ignition Module for Cruisers	*474*
Easy Tool Kit, Mikuni HSR	174, 496
Economy Motorcycle Horn	478
Electronic Ignition, Boyer Bransden	76, 474
Electronic Ignition, Dyna-S	76, 475
Emblems, Fuel (Gas) Tank	73
Emblems, Side Cover	74
Engine Gasket Sets, K&S	288
Engine Gasket Sets, Vesrah	282-287
Engine Gasket Sets, Vesrah (Vintage)	25-26
Engine Hour Meter	477
Engine Oil Seal Kits, K&S	322-323
Engine Oil Seal Kits, Sudco (S3-400, H1-500, H2-750)	47
Engine Sprocket (Crankcase) Cover Gasket	329
Engine Valves, APE	353
Engine Valves, Vesrah	37-38, 348-352
Epoxy-Putty	485
Exhaust Accessories	339
Exhaust Springs with Straight Hook	339
Exhaust Springs with Swivel Hook	339
Exhaust Pipe Gaskets, Vesrah	3, 292-300
Exhaust Pipe Plug	341
Exhaust Wrap	340

F

Factory R&D P-38 Lightning Accelerator Pump Cover	231
FCR Carburetors, Parts & Accessories, Keihin	***100-113***
FCR-MX Carburetors, Parts, & Accessories Keihin	***114-117***
Filter Cleaner, PJ1	488
Filtercharger® Oil, K&N	9, 278, 491
Flasher Relay	99
Float & Pin, Sudco Mikuni & Keihin Carburetor	245-246
Float & Pin, Sudco Mikuni Carburetor	15
Float Bowl Gaskets (OEM)	11-14, 251-262
Float Bowl Gaskets, Sudco Hitachi	18, 226
Float Bowl O-Rings (OEM)	11-14, 249-262
Float Bowl O-Ring, FCR-MX (OEM)	118
Flywheel Pullers, Motion Pro	508-510
Foam Air Filter Oil, PJ1	488
Foot Rest (Foot Pegs), Z1-900	61
Fork Covers	71
Fork Dust Boot (Dust Shield)	56, 427
Fork Oil Level Gauge	507
Fork Seal Kits, K&S	412-425
Fork Tube Piston, Yamaha DT1-250	56
Fork Tubes (Vintage)	56
Fork Tuner Oil, PJ1	427, 488

Index

F

Front Fender Washers	61
Front Turn Signal Stay Brackets	99
Front Wheel Dust Cover Screw Kit	62
FS Digital Performance Ignition, Dynatek	476
FS Programming Kit, Dynatek	476
Fuel (Gas) Tank Emblems	73
Fuel (Gas) Tank, Kawasaki Z1-900	73
Fuel & Vacuum Hose Clips, Sudco	21, 269
Fuel Filters	269
Fuel Hose	270
Fuel Injection Controller, Dynatek	237
Fuel Injector & Carb Cleaner, PJ1	487
Fuel Line Fittings Kit, Motion Pro	269, 497
Fuel Petcock Repair Kits, K&L	23-24, 265-268
Fuel Petcock, Honda	24
Fuel Pump Rebuild Kit, Keihin	513
Fuel Pump Rebuild Kits, Mikuni	217, 515
Fuel Pumps, Mikuni Pulse	217, 515
Fuel System Cleaner, Red Line SI-1 Complete	490
Fuel Tank Products (Vintage)	73
Fuel Valve Adapter Plates, Pingel	263
Fuel Valves, Pingel Power-Flo	22, 263-264
Funnel, Redline Super Trick	492
Fuses, Glass Tube	480

G

G-Type Racing Spark Plugs, NGK	469
Gas Cap	73
Gasket Maker Black TB1207B, Three Bond	484
Gasket Maker Gray TB1200GAU3Z, Three Bond	484
Gasket Maker Gray TB1217H, Three Bond	484
Gasket Sets, K&S	288
Gasket Sets, Vesrah Engine	25-26, 282-287
Gasket Sets for Kawasaki JS440, Vesrah	524
Gasket, Oil Pan	54, 337
Gaskets, Base	27, 289-291
Gaskets, Clutch Cover	49-50, 330-336
Gaskets, Float Bowl	11-14, 251-262
Gaskets, Hitachi Float Bowl	18, 226
Gaskets, Head	27, 28, 289-291
Gaskets, Valve Cover	28-29, 302-305
Gauge, Oil Level	54, 337
Gel Lube	485
Genuine Mikuni Needle Valve Assemblies	11, 211-212, 248
Genuine Mikuni Needle Valve Seat Filter	11, 212, 248
Glass Tube Fuses	480
Gold Fire Pro Pre-Mix Oil, PJ1	486
Gold Fire Synthetic Blend Motor Oil, PJ1	486
Grabrails, Kawasaki	62

H

Handlebar Mount Bolt Kit, Kawasaki	63
Handlebar Switches, K&S	478
Handlebar Switches, Kawasaki Z1-900B	63
Handlebars	63
Hardware	340-341
Harness, Kawasaki Main Wiring	96
Head Gaskets, Vesrah	27-28, 289-291
Headlight	72
Headlight & Turn Signal Grommet Set	72
Headlight Bolts	72
Headlight Bracket, H2-750	71
Headlight Bulbs	480
Headlight Rim & Retainer	72
Headlight Shell Assembly	72
Heat Shield	340
Heavy Duty Cylinder Head Nuts, APE	354
Heavy Duty Cylinder Head Studs, APE	46, 354
Heavy Duty Main Bearing Studs, APE	365
High Performance Motorcycle Oils, Red Line	392, 489
High Performance Valve Guides, APE	42, 353
Hitachi Float Bowl Gaskets	18, 226
Hitachi Type Main & Pilot Jets	18, 226
Hitachi Type Needle Valve Assemblies	18, 226
Horns, K&S Economy Motorcycle	478
Hose Clamps	219
Hose Clamps, K&L Action	269
Hose Clips, Sudco Fuel & Vacuum	22, 269
Hose Shears, Motion Pro	497
HS40 Carburetors, Parts, & Accessories (TM36/TM40), Mikuni	**185-187**
HSR Carburetors, Parts, & Accessories, Mikuni	**171-178**
HV-350 Adhesive	483
Hylomar Gasket Maker and Thread Sealant	485

I

Idle Speed Screw (Stop Screw), Keihin CR Special	130
Ignition (Tune-Up) Kits	77-79
Ignition Coil Kits for Yamaha, Dynatek (Dyna)	471
Ignition Coil Set, Kawasaki H2-750	75, 473
Ignition Coil, Kawasaki & Suzuki	75, 473
Ignition Coil, Universal 12 Volt	75, 473
Ignition Coils, Dyna	76, 472-473
Ignition Coils, Nology Pro Fire Compact	471
Ignition Contact Points	81-86
Ignition Cover Gaskets (Point & Pulser)	51
Ignition Products	470-471, 474-477
Ignition Switches	96-97

I

Ignition Tune-Up Kits	77-79
Ignition Wire, Dynatek (Dyna)	471
Ignition Wire, Nology	470
Indicator Lamp Cover Set, Kawasaki Z1-900	64
Indicator Panel Decal, Kawasaki Z1-900	64
Inline Fuel Valves, Motion Pro	268, 494
Inline Wire Connector, NGK	470
Inner Kawasaki Point Cover Gasket	52
Instrument Bulbs	480
Instrument Gauge Brackets	64
Intake Carb Holders for Vintage, Sudco	6-7
Intake Carb Holders, Mikuni RS	165
Intake Carb Holders, Sudco OEM	221-223
Intake Manifolds, Honda CB750	168, 218
Intake Manifolds, UPP ATV	219
Intake Manifolds, UPP Vintage Street	219
Intake Performance Manifolds, Mikuni HSR	173
Iridium IX Spark Plugs, NGK	469
JE Racing Piston Kits	31, 366-368

J

Jet Blocks, Keihin CR	131
Jet Carrier	216
Jet Needles, Keihin CR Special	132
Jet Needles, Keihin CVH, PE26-28, PWK28	148
Jet Needles, Keihin FCR	119
Jet Needles, Keihin PE, PJ, PWK, PWM	147
Jet Needles, Keihin PE20-24mm	146
Jet Needles, Mikuni	203-206
Jet Needles, Mikuni HSR	173
Jet Needles, Mikuni RS	165
Jet Needles, Mikuni TM36	187
Jet Needles, Mikuni TM40 (HS40)	187
Jet Needles, Mikuni TMS Series	190
Jet Needles, Mikuni TMX Series	190
Jets, Hitachi Type Main	18, 226
Jets, Hitachi Type Pilot	18, 226
Jets, Keihin Main	151-152
Jets, Keihin Slow	149-150
Jets, Mikuni Main	215-216
Jets, Mikuni Pilot	213-214

K

K&N

Air Filters HS40 (TM40)	*187*
Air Filter Cleaner & Degreaser	*9, 278, 491*
Air Filter for Mikuni RS Series	*165*
Air Filters	*271-278*
ATV OE Replacement Air Filters	*273*

K

K&N

Custom Clamp On Air Filter Sets	*275-277*
Fuel Line "T"	*268, 497*
OE Replacement Air Filters (Vintage)	*8*
OE Replacement Air Filters	*271-273*
Oil Filters	*375-389*
Oil Filters for Watercraft	*525*
Rubber Base Crankcase Vent Filters	*48, 337*
Steel Base Crankcase Vent Filters	*48, 337*
Universal Clamp-On Air Filters	*278*

Kawasaki

Cam Chain Idler Adapter	*43, 354*
Crankshaft Oil Seal Kits (S3-400, H1-500, H2-750)	*47*
Front Turn Signal Stems	*99*
H2-750 Carb Kits (Mikuni)	*4, 155*
Inner Point Cover Gasket	*52*
Kick Start Block Off Cover	*365*
Low Profile Breather Cover	*365*
Low Profile Oil Filter Cover	*365*
Personal Watercraft Flywheel	*525*
Point Cover, Z1-900/KZ1000	*52*
Point Cover Gaskets	*51-52*
Reproduction Seat Trim	*70*

Keihin

Air Cut-Off Valve, FCR-MX	*115*
Cable Adjuster Holder, PE20-28 Throttle Screw	*145*
Carburetor O-Rings	*226*
Choke Cable System for all PWK's	*132, 135*
Clear Pink Overflow Hose	*270*
CR Special Carburetor Rebuild Kits	*128*
FCR Air Filters, Adapters, & Adapter O-Ring	*121*
FCR Cable Choke Assembly	*109*
FCR Needle Valve Seats	*113*
FCR Slow Air Jet 99101-124-XXX	*149*
FCR Tools	*496*
Methanol Conversion Kit, FCR	*113*
Methanol Conversion Kit, CR Special	*128*
Needle Valve Sets (OEM)	*247*
Needle Valves (Vintage)	*11-14*
Needle Valves (OEM)	*247*
OEM Accelerator Pump Rebuild Kits	*229*
OEM FCR-MX Float Bowl O-Ring	*117*
Offroad Carb Kits	*156-158*
PJ Carburetor Rebuild Kit	*141*
PWK 39 Snowmobile Carburetor Rebuild Kit	*139*
Roundslide CR Sidedraft Racing Carburetors	*122-123*
Watercraft Carburetor Rebuild Kits	*239, 513*

Index

K

Kill Buttons & Brake Light Switch 479

L

Lazer Iridium IX Spark Plugs, NGK 469
Left Crankcase Cover Gaskets (Generator & Ignition) 328-329
Lever & Perch Assemblies, Motion Pro 65, 443
Lever Holders (Brackets) 65
LH Gear Cover (Crankcase) Gaskets 329
License Plate Bracket, Kawasaki H2-750 71
LPC-3 Penetrating Oil, PJ1 487
Liquid Gasket TB1211, Three Bond White Silicone 484
Liquid Gasket TB1212C, Three Bond Clear Silicone 484
Liquid Gasket TB1184, Three Bond Case Sealant 484

M

Mag & Aluminum Polish 482
Magnetic Parts Dish 496
Magura 314 Straight Pull Throttle 444
Main & Pilot Jets, Sudco Hitachi Type 18, 226
Main Air Jet N424-14-XXX 130, 151
Main Jet Extender Kit, Mikuni HSR 171
Main Jet Wrench, Keihin/Mikuni 214, 495
Main Jet Wrenches, Motion Pro 495
Main Jets, Keihin 150-151
Main Jets, Mikuni 212-213
Main Jets, N424-36-XXX 151, 513
Main Jet, Honda Primary Type 151, 225
Main Jet, Honda Secondary Type 151, 225
Manifold Adapters 218
Manual Cam Chain Tensioners, APE 43, 356-358
Master Cylinder Diaphragms, Kawasaki 59
Master Cylinder Rebuild Kits 59, 436-441
Master Cylinder Snap-Ring Pliers 59, 441, 505
Master Cylinders, Nissin 442
Master Link Clip Pliers 55, 503
Measuring Cylinders 492
Mikuni Tuning Manual 165, 498, 514

Motion Pro

11-Slot T-Handle Rack 500
2-Stroke Leakdown Tester 501
4-Stroke Leakdown Tester 501
5 PC. Mini-Pro T-Handles 500
6 PC. Racer T-Handles Set 500
7 PC. Metric T-Handles 500
90-Degree 1/4" Hex Driver 495
ATV & Offroad Throttle Cables 447
ATV Terminator Clutch Cables 446
ATV Twist Throttle Kit 445
Auxiliary Gas Tanks 494

M

Motion Pro

Battery Booster Cable Set 498
Bead Popper 506
BeadPro Tire Bead Breaker and Lever Tool Set 506
Cable Luber 66, 498
Carb Adjusting Tool 495
Carburetor Synchronizer 493
Chain Breaker 505
Chain Breaker & Riveting Tool 45, 505
Chrome-Moly Hex Axle Tool 503
Clutch Holding Tool 407, 499
Combination Fork Damper Tool 507
CR Pro Throttle 444
Crankcase Splitter 501
CRF/XR50 Control Kit 443
D.O.T. Tailplate & Light 480
Damper Rod Fork Tool 507
Degree Wheel 502
DELUXE Piston Pin Puller Tool 502
Deluxe Suspension Bearing Service Tool 507
Float Bowl Wrench 496
Fork Oil Level Gauge 507
Fork Seal Drivers 426, 507
Fuel Line Fittings Kit 269, 497
Hose Shears 497
Hydraulic Brake Bleeder 503
Jumbo Chain Tool 506
Lever & Perch Assemblies 65, 443
Magnetic Parts Dish 496
Main Jet Wrenches 495
Metric Allen Bolt Hardware Kit (Zinc) 341
Metric Flange Head Bolts Hardware Kit (Zinc) 340
Metric Hex Bolt Hardware Kit (Zinc) 341
Metric Nut Hardware Kit (Zinc) 341
Metric Washer Hardware Kit (Zinc) 341
Off-Road Hardware Kit 170 pcs 340
PBR Chain Tool 505
Pedal Anchor Kit 445
Pilot Screw Adjusting Tool 495
Premium (Tygon) Fuel Hose 270
Quick Adjust MX Clutch Lever 443
Quick Adjust MX Clutch Lever with Hot Start Lever 443
Rear Brake Kit for Yamaha Blaster 446
Rim Protectors 506
Rotor and Sprocket Holder 407, 504
Seal Mate 427, 507
Seal/Bearing Retainer Tools 504
Spoke Wrenches 506

M

Motion Pro

Spoon Tire Iron	*506*
Spring Hooks (Pullers)	*339, 501*
Standard Steel Tire Irons	*506*
Steel O-Clip Pincer Tool	*269, 497*
Straight Push-Pull Throttle	*444*
Stud Installation Tools	*501*
T-Handle Phillips Set	*501*
Torque Wrench Adapter	*499*
Turbo Throttle	*444*
Valve Clearance Gauges	*502*
Valve Shim Tools	*34, 35, 345-346*
Valve Shim Tools	*502*
Valve Spring Compressor	*501*
Vortex Throttle	*444*
Wheel Bearing Remover Set	*504*
Yamaha ATV Axle Wrench	*499*
Yamaha Banshee/Blaster Idle Kit	*238*
Mounting Adapters (Spigots), Keihin CR Special	126-127
Mounting Adapters (Spigots), Keihin FCR Special	109-110
Muffler Mounting Kit, Z1-900	3

N

N100.606 Slow Speed Jets, Mikuni (Watercraft)	212, 516
N102.221 High Speed Jets, Mikuni (Watercraft)	212, 516
N424-35-XXX Slow Jets, Keihin (Watercraft)	149, 513
N424-36-XXX Main Jets, Keihin (Watercraft)	151, 513
Needle Jets, Mikuni	206-207
Needle Shims, Mikuni Carburetor	131, 205
Needle Valve	11-14
Needle Valve Arm Springs, Mikuni (Watercraft)	520
Needle Valve Assemblies	11-14
Needle Valve Assemblies, Mikuni	210-211
Needle Valve Assemblies, Mikuni HSR	171
Needle Valve Assemblies, OEM	248
Needle Valve Assembly, Mikuni RS	164
Needle Valve Assembly, TM33-8012	183
Needle Valve Assembly, Mikuni VM Spigot	201
Needle Valve Seats, Keihin CR Special	128
Needle Valve Sets, Mikuni BN34/38/44 (Watercraft)	518
Needle Valve Sets, Mikuni BN46I (Watercraft)	522
Needle Valve Sets, Mikuni Super BN38/44/46 (Watercraft)	520
Needle Valve Sets with Viton Tip, Mikuni BN38/44 (Watercraft)	518
Needle Valve Sets, Needle Valves, Gaskets & O-Rings	252-262
Needle Valve Upgrade Kit, Mikuni BN38/44 (Watercraft)	518
Needle Valves, Sudco Keihin	11

NGK

G-Type Racing Spark Plugs	*469*

N

NGK

Inline Wire Connector	*470*
Iridium IX Spark Plugs	*469*
Lazer Iridium IX Spark Plugs	*469*
Premium Quality Racing Cables	*75, 470*
Resistor Covers	*466-467*
Resistor Spark Plugs	*468-469*
Spark Plug Indexing Washer Kit	*469*
Spark Plugs	*468-469*
Standard Spark Plugs	*468-469*
Nipple Kits, Spoke	69
Non-Metallic Anti-Seize	485
Nozzle & Nozzle Holder, Keihin CR	130

O

O-Rings, Kawasaki Cylinder Head	28, 288
OEM 633 Series Nozzle (Needle Jet), Mikuni TMX Late Style	191
OEM TMX Throttle Valve, Mikuni TMX Late Style	191
OEM FCR-MX Float Bowl O-Ring	117
OEM FCR-MX Leak Jet N424-52-XXX, Keihin	149
OEM Needle Valve Assembly	191
OEM Needle Valve Assembly, Mikuni	11, 248
OEM Needle Valve Assembly, Mikuni TMX	191
OEM Style Replacement Turn Signals	98
OEM Style Turn Signal Stems	98
OEM Type Replacement Air Filters	8
OEM Type Replacement Air Filters, K&N	8
Off-Road Hardware Kit 170pcs, Motion Pro	340
Offroad Carburetor Repair Kits	156-158
Oil Filler Cans, Plastic	492
Oil Filter Bolt	47, 374, 389, 497
Oil Filters	374-392
Oil Level Gauge	54, 337
Oil Pan Gasket	54, 337
Oil Pump Banjo Bolt Washer Kit	47
Oil Seal Kits, ATV & Offroad	322-323
Oil Seal Kits, Engine (Vintage)	47
Oil Seal Kits, K&S	322-323

P

PE Series, Keihin — 145-146

Pedal Anchor Kit	445
Pilot Jets, Mikuni	213-214
Pilot Screw, Keihin FCR-MX	114, 238
Pingel Power-FloTM Fuel Valves	22, 263-264
Piston Pin Bearing	524
Piston Pin Bearings	369

Index

P	
Piston Rings	46 371
PJ Exploded View, Keihin	140
PJ Replacement Parts, Keihin	141
PJ Throttle Valve, Keihin	141
PJ1 Products	486-488
Assembly Lube	*490*
Black Label Chain Lube	*487*
Blue Label Chain Lube	*487*
Cable Lube	*66, 446, 487*
Cartridge Pro Fork Fluid	*488*
Clutch Tuner Gear Oil	*486*
Fabric Air Filter Oil	*488*
Filter Cleaner	*488*
Flat Shield	*488*
Foam Air Filter Oil	*488*
Fork Tuner Oil	*427, 488*
Fuel Injector & Carb Cleaner	*487*
Gold Fire Pro Pre-Mix Oil	*486*
Gold Fire Synthetic Blend Motor Oil	*487*
LPC-3 Penetrating Oil	*482*
Renew and Protect	*482*
Silver Fire Injector Oil	*487*
Silver Fire Pre-Mix Oil	*487*
Super Cleaner	*80, 487*
Plastic Jet Boxes (Storage Boxes)	17, 225, 227
Plastic Oil Filler Cans	492
Plastic Renew	482
Pocket Tuner, Mikuni	166, 498, 514
Point Cover Gasket, Inner Kawasaki	52
Point Cover Gaskets	51
Point Cover, Kawasaki Z1-900/KZ1000	52
Polyurethane Fuel, Vent Hose & Primer Hose	270
Pop-Off Pressure Chart	513
Pop-Off Pump, Mikuni	520, 522
Preserves Protectant	481
Press-Fit Primary Main Jets, Sudco Keihin Type	16
Priming Nozzle, Mikuni	201
Puller M18mm x 1.5mm R.H.	525
PWK Series, Keihin	***133-140***
Exploded View, PWK28	*134*
Exploded View, PWK33-41	*136*
Exploded View, PWK39	*138*
Exploded View, PWM	*142*
Q	
Quick Adjust MX Clutch Lever	443
Quick Adjust MX Clutch Lever with Hot Start Lever	443
Quick Disconnect Inline Fuel Couplers	268, 497
R	
RPM Limiter, Dynatek	477
Race Kit 48mm for Big Motors, Mikuni HSR	170
Racers Kill Switch	479
Racing Brake Pads, Vesrah	464
Rear Brake Kit for Yamaha Blaster	446
Rear Turn Signal Stem, H2-750	98
Rear Wheel Damper Set, Kawasaki Z1-900	69
Recharger® Filter Care Service Kit, K&N	9, 278, 491
Redline Products	489-490
Renew and Protect, PJ1	482
Repair Kits, Carburetor (OEM)	241-244
Replacement Kill Buttons	479
Replacement Seat Covers	70
Replacement Seat Foam	70
Replica Exhaust Pipe Set	2-3
Replica Handlebars	63
Replica Inlet Tube & Top Duct, H2-750	9
Resistor Covers, NGK	466-467
Resistor Spark Plugs, NGK	468-469
Rhino Carburetor Rebuild Kit	244
Rhino Fuel Pump Rebuild Kit	217
Rim Protectors	506
RK Drive Chain	55, 410-411
Rotor and Sprocket Holder, Motion Pro	407, 504
RS Smoothbore, Mikuni	160-165
Rubber Flange Adapters, Mikuni HS40 (TM40)	186
Rubber Fuel Tank Band, Kawasaki	73
Rubber Meter Cover, Kawasaki H2-750	64
Rubber Mounting Flanges	220
Rubber Mounting Flanges w/Clamp	172
Rubber O-Ring Camshaft Holder, Honda	32
Rustol	73, 491
S	
Seal Mate	427, 507
Sealing Rubber, Honda	32, 309
Seat Assembly, Kawasaki Z1-900	70
Seat Belt	70
Seat Covers, Replacement	70
Seat Foam, Replacement	70
Seat Trim, Kawasaki Reproduction	70
Shift Minder System, Dynatek	477
Shim Tools, Motion Pro Valve	34, 35, 345, 346, 502
Shims, Valve Adjustment	
13mm	*33, 344*
25mm	*34, 345*

S

Shims, Valve Adjustment

29.5mm	*36, 347*
29mm	*35,347*
7.50mm	*342, 523*
9.50mm	*343, 523*
Shocks for H1-500 & H2-75 , Chrome Rear	60
Shocks, for Z1/KZ900 & KZ1000, Chrome Rear	60
Short Idle Screw, Mikuni HSR	173
SI-1 Complete Fuel System Cleaner, Red Line	490
Side Carburetor Cover N189.606, Mikuni CV	310
Side Stand Bolt & Nut Set, Kawasaki	62
Side Stand, Z1-900	62
Silver Fire Injector Oil, PJ1	487
Silver Fire Pre-Mix Oil, PJ1	487
Slide Diaphragms, Sudco Mikuni Carb	21, 229
Slow Air Jet 99101-124-XXX, FCR	149
Slow Air Screw Set Conversion, FCR	149
Slow Jets, Keihin	148-149
Slow Jets, N424-35-XXX, Keihin	150, 513
Solvent 184™, Valco	485
Spark Plugs, NGK	468-469
Speedometer, H1-500	64
Spigots, Keihin CR Special Mounting Adapters	126-127
Spigots, Keihin FCR Special Mounting Adapters	110-111
Spoke & Nipple Kits	69
Spoke Wheel Weights	69
Spoke Wrenches	506
Spoon Tire Iron	506
Stainless Steel Hose Protectors	270
Standard Spark Plugs, NGK	468-469
Standard Steel Tire Irons	506
Starter Jets (1001-108-XXX)	130
Stator Cover Gaskets (Alternator/Generator)	53-54
Stator Cover, Kawasaki Z1-900/KZ1000	52
Stator, Kawasaki Z1-900	95
Steel O-Clip Pincer Tool, Motion Pro	269, 497
Steering Stem Bearing Kits	428-435
Stub Nut Kit, H2-750	28

Sunstar

OEM Quality Steel Replacement Sprockets	*410*
Steel Sprockets	*55*
Street Carb Kits, H2-750	4, 154

Super BN & BN Carburetors, Mikuni 514, 516-522

Super Cleaner, PJ1	80, 487
Super Cool with Water Wetter, Red Line	491
Suspension Accessories	426-427
Suspension Fluids, Red Line	427, 488

S

Suspension Tools	507
Swingarm Bearing Tool, Motion Pro	504
Sync Pro Carburetor Tuner, Motion Pro	493
Synthetic CV-2 Grease	492
Synthetic Motor Oils, Red Line	489
Synthetic Racing Oil, Red Line	489

T

T-Fittings, Brass	165, 269, 497
Tach Cable Guide Kit, Z1	36, 311
Tachometer Cable, Z1	36, 311
Tachometer, H1-500	64
Tail Inner Plate, Kawasaki H2-750	71
Tail Light Bulbs	480
Tail Light Lens	99
Tail Light Lens, Kawasaki H1/H2/KH	99
Tail Light Lens, Yamaha	99
Tappet Tool Set, Motion Pro	32
Thread Locker	483

Three Bond Products 483-484

Throttle Cables, FCR	119
Throttle Shaft Rebuild Kits, Keihin (Watercraft)	516
Throttle Cables, Mikuni HS40 (TM40)	186
Throttle Cables, Mikuni HSR	173
Throttle Valves, Mikuni HS40 (TM40)	179
Throttle Valve (Slides), Mikuni Roundslide	208-209
Throttle Valves, Mikuni VM29 Smootbore	167
Throttle Valves, CR Special	129
Throttles	444
Timing Belt Cover Bolt Seals	309
Tire Iron, Spoon	506
Tire Irons, Standard Steel	506
Titanium Valve Spring Retainers, APE	355

TM Series Carburetor, Mikuni 179-187
TMS/TMX Series, Mikuni 188-192

Tokyomods

Drain Plug	*135, 139*
Drain Plug	*140, 143, 144*
FCR-MX Billet Hot Start Nut	*115*
FCR-MX Fuel Mixture Screw	*115, 234*
FCR-MX Less Tension Throttle Spring	*115*
FCR-MX Sump (Drain Plug)	*115*
Top Cap Cover Gasket, Carburetor	10
Torque Wrench Adapter, Motion Pro	499
Total Kits for Big Twin Evolution & Twin Cam, Mikuni	170
Tune-Up Kits, Ignition	77-79
Turbo Throttle, Motion Pro	444
Turn Signal Bulbs	480

Index

T

Turn Signal Stay Brackets, Kawasaki H2-750 Front	99
Turn Signal Stems, OEM Style	98
Turn Signals, OEM Style Replacement	98
Turn Signals, Universal	98, 480

U

Universal 12 Volt Ignition Coil	76, 473
Universal Clamp-On Air Filter, EMGO	279
Universal Muffler Packing Kit	338
Universal Turn Signals	98, 480

V

Vacuum Hose Clips, Sudco Fuel &	22, 269
Valve (Head) Cover Bolt Seals	306-308
Valve Adjustment Shims, 13mm	33, 344
Valve Adjustment Shims, 25mm	34, 345
Valve Adjustment Shims, 29.5mm	36, 347
Valve Adjustment Shims, 29mm	35, 346
Valve Adjustment Shims, 7.50mm	342, 523
Valve Adjustment Shims, 9.50mm	343-523
Valve APE Engines	353
Valve Cover Bolt Seals, Vesrah	306-308
Valve Cover Gaskets, Vesrah	29-30, 302-305
Valve Cover O-Ring Seal (Spark Plug Hole)	310
Valve Cover Rubber Parts	32, 309-311
Valve Guides, APE High Performance	42, 353
Valve Keepers	39-42, 312-321
Valve Shims	33-36, 342-347
Valve Spring Compressor, Motion Pro	501
Valve Spring Retainers, APE Titanium	355
Valve Springs, APE High Performance	355
Valve Stem Seals	33-42, 312-321
VamPLIERS	494
Velocity Stacks, Mikuni RS	164
Velocity Stacks, Keihin CR Special	129
Velocity Stacks, Keihin FCR	107
Velocity Stacks, Keihin FCR Single	109
VM Series Carburetor, Mikuni	***167-170, 193-202***
Voltage Monitor, Dynatek	477
Vortex Throttle, Motion Pro	444

W

Washers, Front Fender	61
Water Wetter, Red Line	490
WebCam Shafts	31
Wheel Bearing Remover Set, Motion Pro	504
Wheel Tools	506
Wheel Weights, Honda Spoke	69
White Lithium Grease	492
White Silicone Liquid Gasket TB1211, Three Bond	484

W

Wiring Harness, Kawasaki Main	95
Wrench, Keihin/Mikuni Main Jet	215, 495
Wrenches & Pliers	499

Y

Yamaha Banshee/Blaster Idle Kit, Motion Pro	238
Yamaha Tail Light Lens	99
Yellow Tygon Fuel Hose	270

Z

Z1-900 Fuel (Gas) Tank Cap Assembly	73
Z1-900 One Piece Head Gasket	28
Z1-900 Replica Air Box	9
Z1-900 Side Stand	62
Z1-900/KZ1000 Point Cover	52
Z1-900/KZ1000 Stator Cover	52
Z1-1000 One Piece Head Gasket	28
Z1/KZ 900/1000 Shift Lever	61
Z1/KZ Point Cover	57
Z1/KZ900 Brake Pedal	61
Z1/KZ900 Brake Rod	61
Z1R Headlight Stay (Fork Covers)	71
Z1R-1000 Tail Light Lens	99
Zip-Ty Air Mixture Screw	149, 214, 238

Looking for motorcycle fuel parts? Visit our website.