MOUNTING INSTRUCTIONS

LICENSE SUPPORT FOR

KAWASAKI VERSYS 650 15'

Ref.: 7789N

It would be convinient to re-tight the licence support screws, specially the ones that are fixed to the motorcycle, whenever you maintain the vehicle.

Thanks for your attention.

ID.	DESCRIPTION	QTY.
1	Licence support	1
2	Black M6x20 DIN1001 screw	4
3	Black M6 DIN9021 washer	4
4	M6 nut DIN6923	4
5	Wellnut	1
6	Plastic ziptides 2,5x98	4
7	License support light	1
8	Reflector	1
9	Support for reflector	1
10	M5x10 screw ISO7380	2
10	M5 Nut DIN6923	2

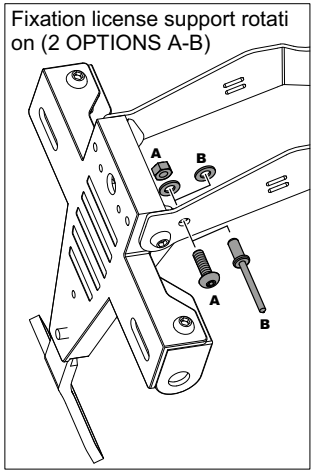

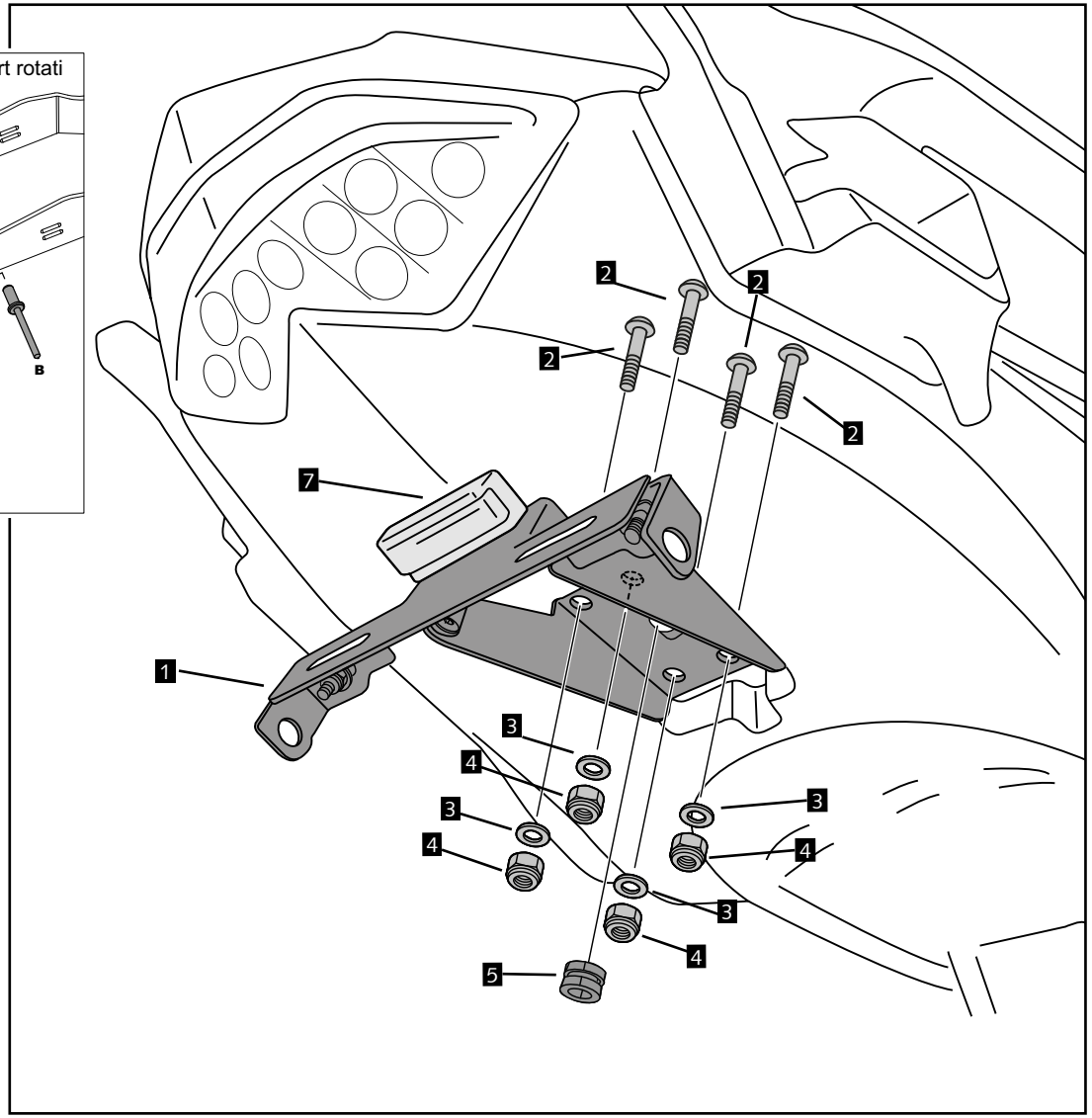

Learn more about motorcycle license plate accessories we have.