DIMENSIONS

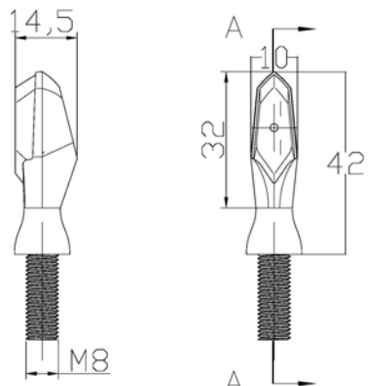

DIMENSIONS

Looking for dependable motorcycle signal lights & components? Rely on Puig for quality and long-lasting products.