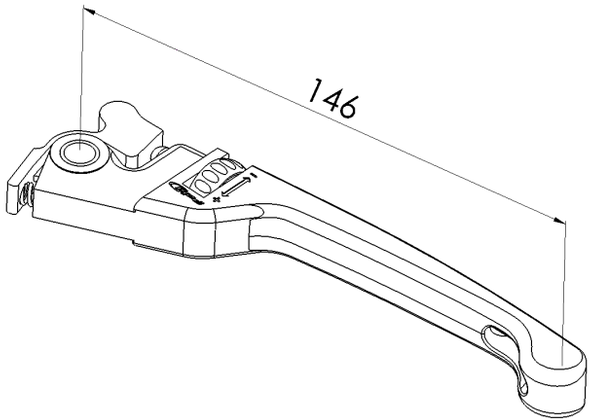


**DIMENSIONS**

When it comes to quality motorcycle handlebars & controls, Puig is the brand you can depend on.