PWSAK-Y17-008

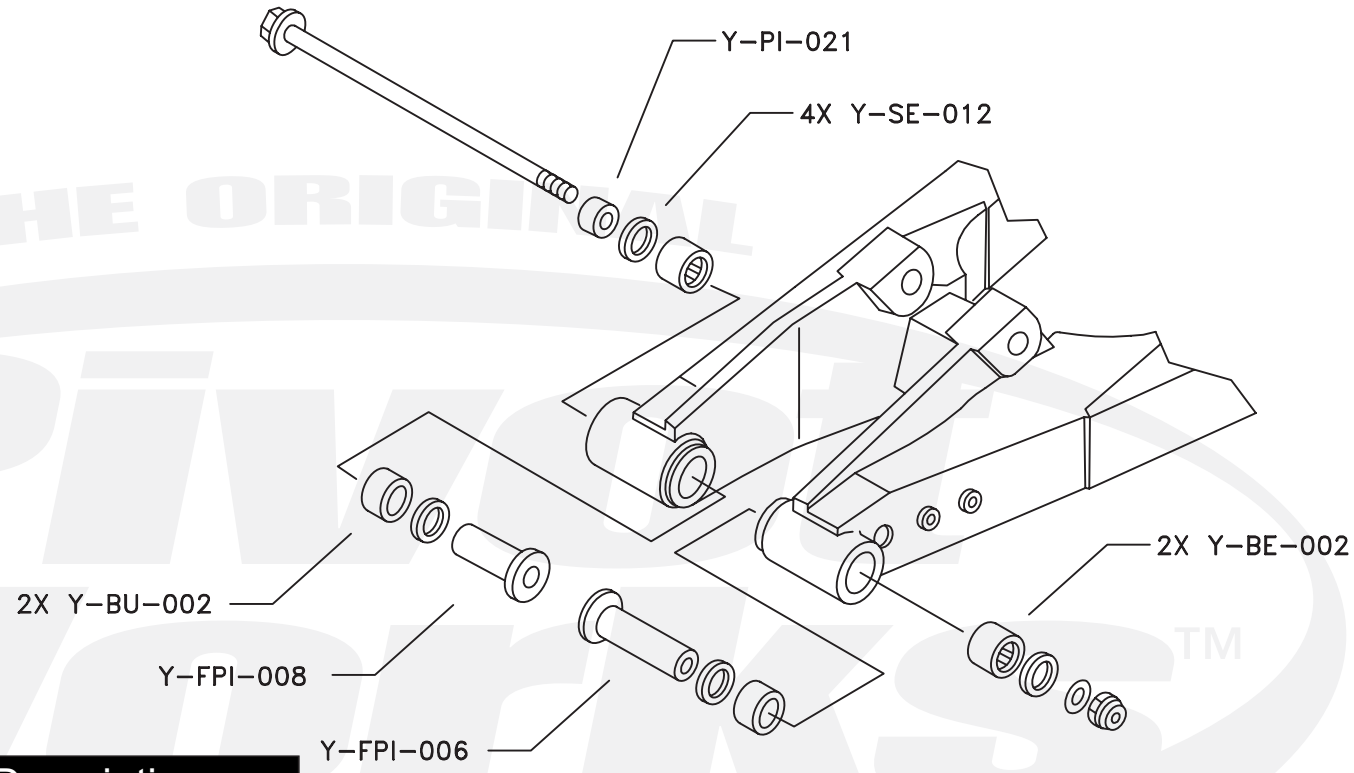

Qty.	Part Number	Description
2	Y-BE-002	Bearing
2	Y-BU-002	Bushing
1	Y-FPI-006	Pin
1	Y-FPI-008	Pin
1	Y-PI-021	Pin
4	Y-SE-012	Seal

Rely on premium motorcycle frame & body by Pivot Works if you're looking for quality and efficiency.