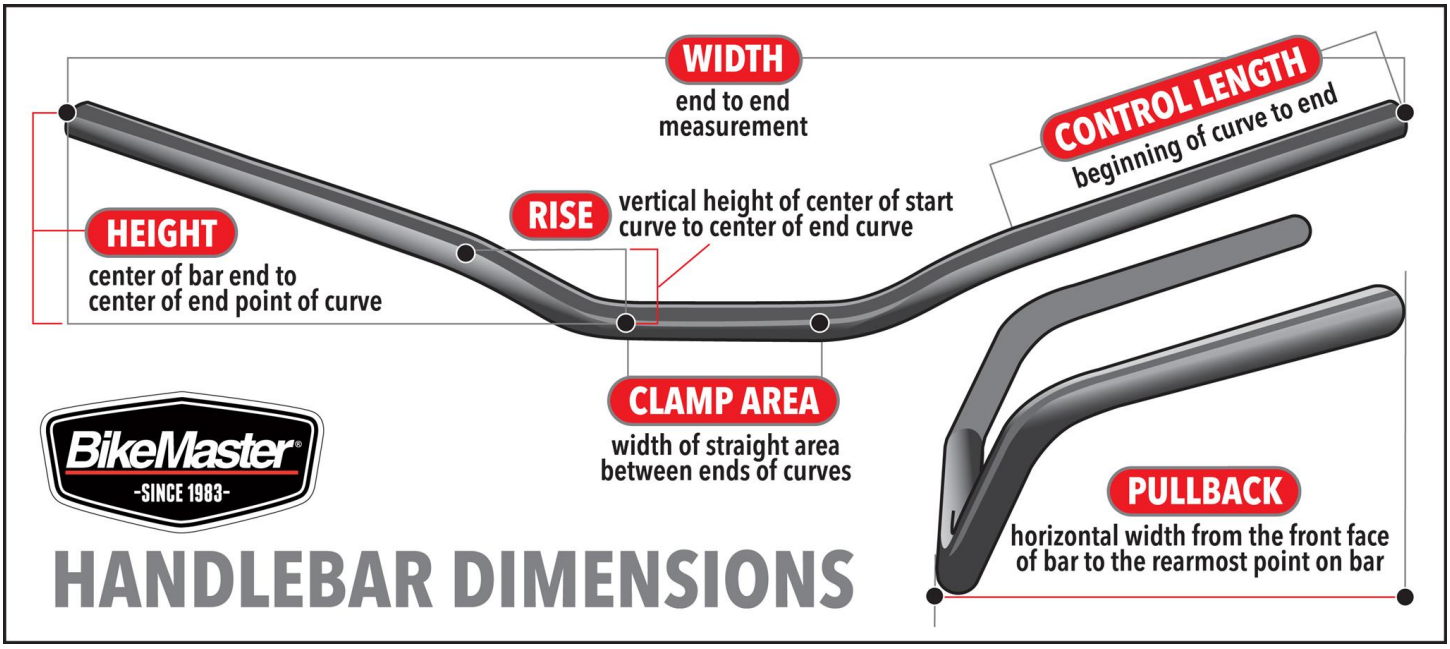

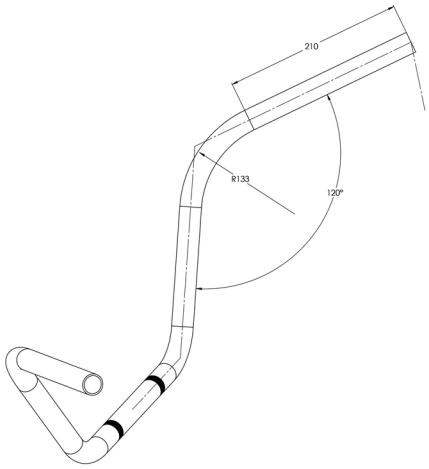

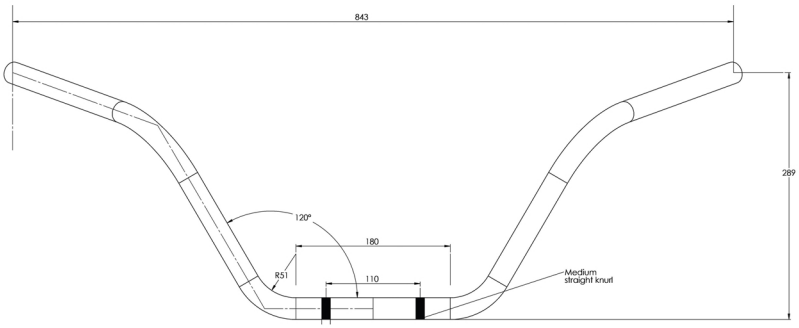

BikeMaster puts everything within reach.

Find out more about handlebars & controls we have.