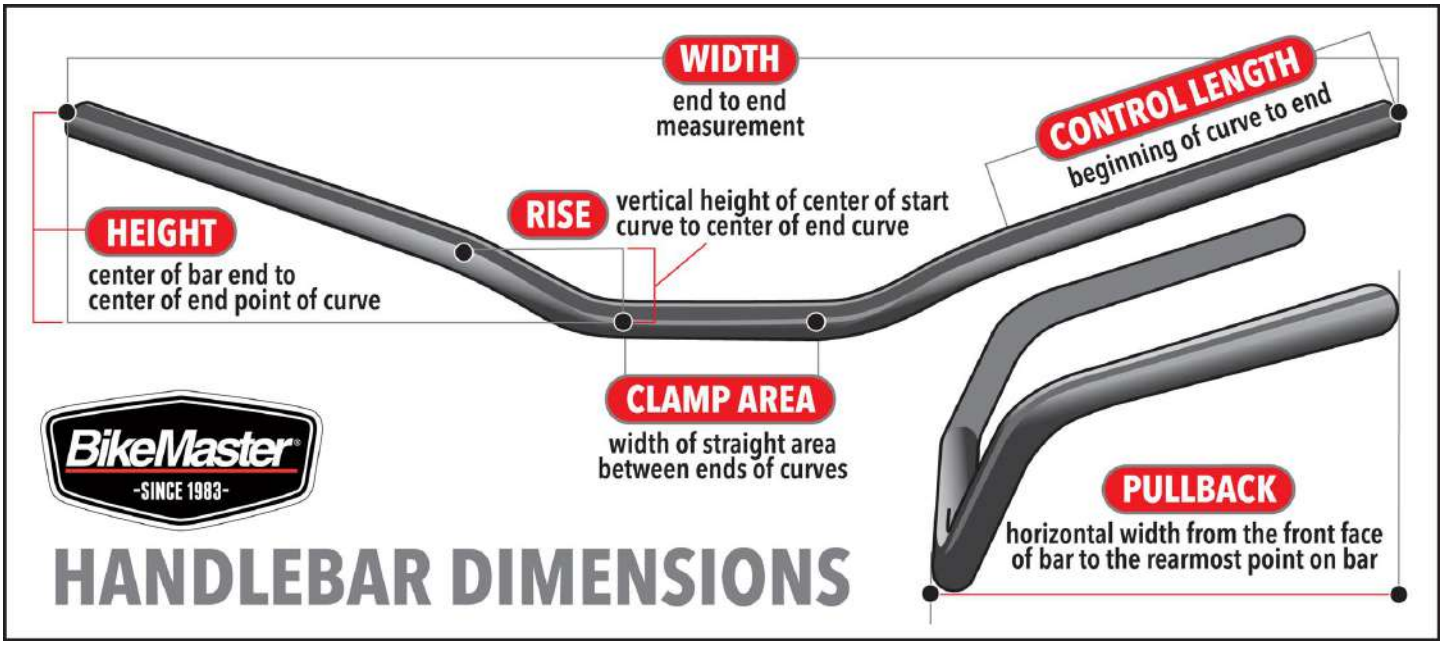

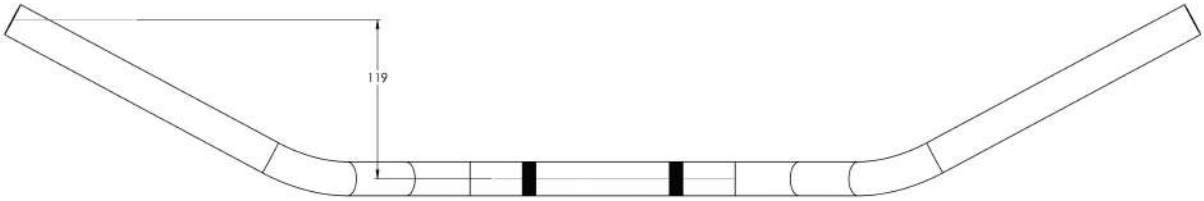

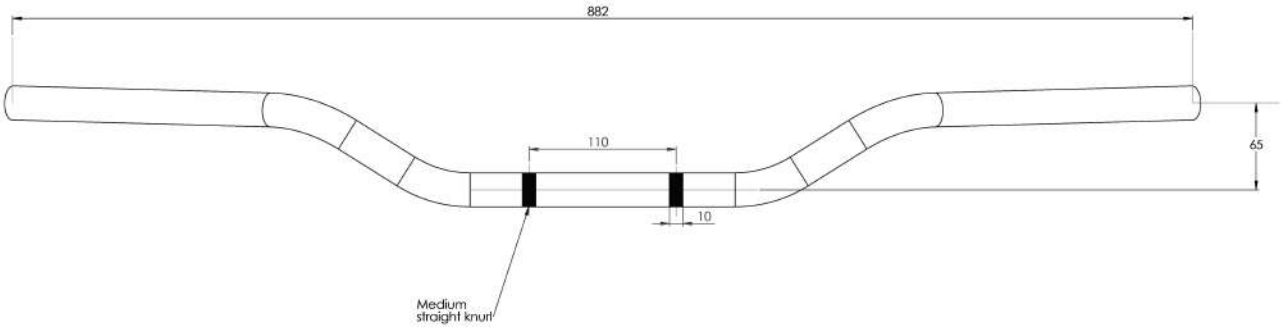

Find out more about handlebars & controls we have.