ASSEMBLY OF CLUTCH #527-9MA CLUTCH KIT

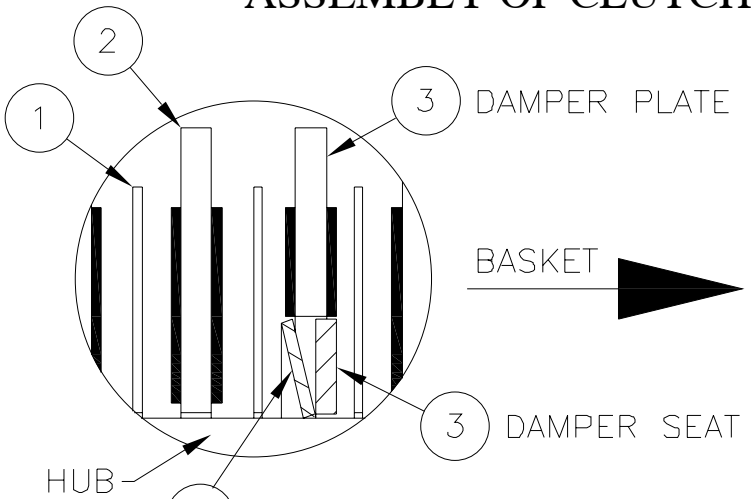

NO.	DESCRIPTION	QTY.
1	DRIVEN PLATE, STEEL	7
2	DRIVING PLATE, FRICTION	6
3	B PLATE, DAMPER SPRING & SEAT	1
4	THICK DRIVE PLATE – THICK (.125)	1

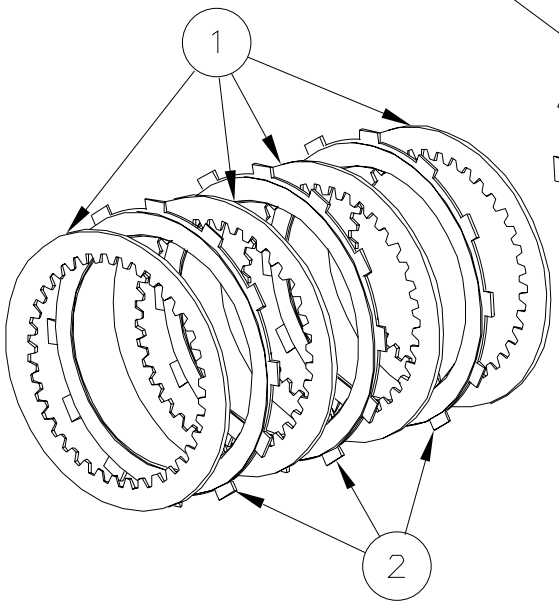

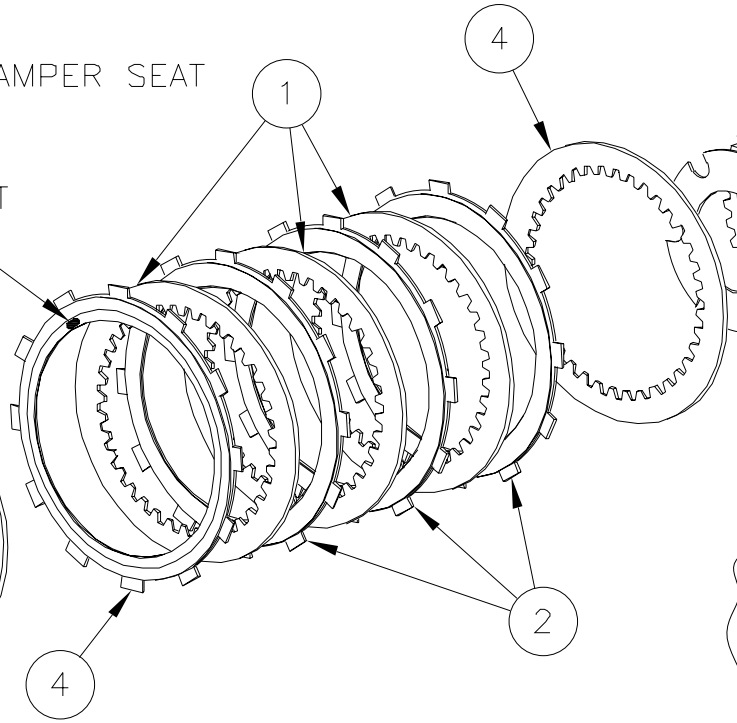

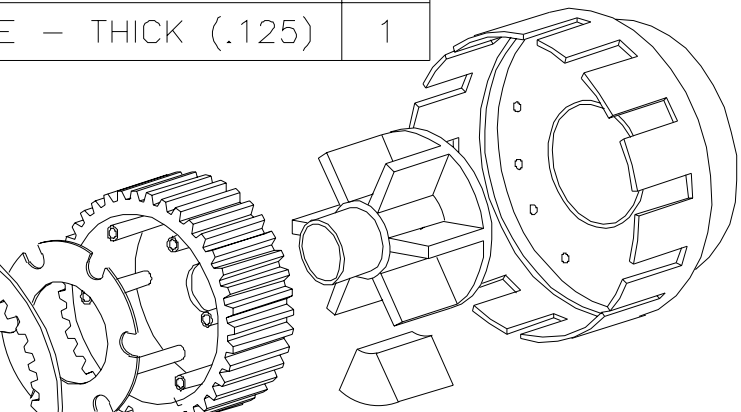

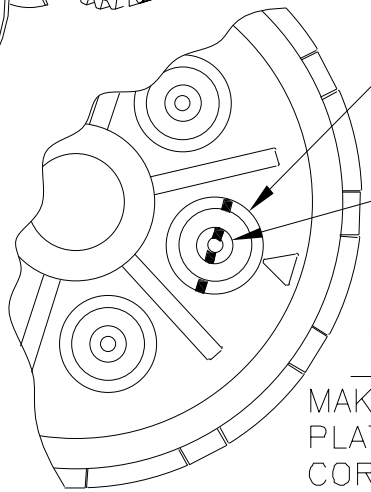

NOTE:

MAKE SURE PRESSURE PLATE IS INSTALLED CORRECTLY BY LINING UP THE GROOVED SPRING POST WITH THE GROOVED AND ARROWED HOLE IN PRESSURE PLATE.

Look through our comprehensive collection of motorcycle drivetrain & transmission parts right away.